MAKE IT EASY. MAKE IT MOOG

2018 - 2019

Steering and suspension

Pièces de Direction et Suspension • Lenkungs- und Fahrwerksteile • Componentes de Dirección y Suspensión • Tiranteria e Sospensioni • Stuur- en ophangingsonderdelen • Elementy układu kierowniczego i zawieszenia • Рулевое управление и подвеска • Σύστημα διεύθυνσης και ανάρτησης • Direcção e Suspensão • Řízení a zavešení • Direcție şi suspensie • Kormányzás és felfüggesztés • Окачване и Кормилно управление • Direksiyon ve süspansiyon • نظام التعليق و التوجيه

MOOG GUARANTEE 3 YEARS*

CATMO1801

*Terms and conditions apply. Countries in which the 3 years guarantee is applicable: All European Union countries, Norway, Switzerland, Serbia, Bosnia-Herzegovina, Montenegro, Kosovo, Albania and Macedonia.Страны, в которых действует срок гарантии 3 года: Все страны Европейского союза, Норвегия, Швейцария, Сербия, Босния и Герцеговина, Черногория, Косово, Албания и Македония.

FEDERAL-MOGUL MOTORPARTS

www.moogparts.eu

MOOG provides three strong benefits to support your business

At MOOG we do everything to keep people driving safely and comfortable.
That is why we do everything to deliver on these **3 promises:**

- Carefully engineered and tested to meet OE standards
- Proven performance through extensive testing
- 3 years product guarantee*

EASY TO TRUST

- One box is all you need: all necessary hardware is included
- Repair kits range
- Installation guides
- Outstanding product range
- Leading car parc coverage

EASY TO INSTALL

EASY TO KNOW

- Find us online
- Quick id. of MOOG parts on paper and online catalogues
- Always up to date via online Easy Solutions Bulletins
- Check the Original MOOG quality
- Easy training
- MOOG e-mail alerts
- Check out our videos for news and updates

*Terms and conditions apply. Countries in which the 3 years guarantee is applicable: All European Union countries, Norway, Switzerland, Serbia, Bosnia-Herzegovina, Montenegro, Kosovo, Albania and Macedonia.Страны, в которых действует срок гарантии 3 года: Все страны Европейского союза, Норвегия, Швейцария, Сербия, Босния и Герцеговина, Черногория, Косово, Албания и Македония.

Vehicle manufacturer index 1

1487

1601

OE → MOOG 1654

Searching for Wheel End Bearings? Check out our CATMO1802-catalogue.

MOOG: easy to trust, unquestioned OE quality

MOOG axial rods are relied upon by manufacturers and the aftermarket to ensure smooth, responsive steering and excellent durability. Axial rods are steering parts that form the connection between the steering rack and tie rod end. They transmit axial forces to the tie rod end and allow the wheels to turn. MOOG gaiter kits are high quality chassis parts manufactured from high-grade premium rubber to match OE standards. They create a excellent seal and protection against corrosion and wear. In this way, MOOG always offers a part you fully trust.

MOOG GUARANTEE 3 YEARS *

All new MOOG range: axial rod & gaiter kits

MOOG axial rods are forged from **high quality material** and heat treated to achieve the optimum grain structure. This ensures our axial rod & gaiter kits:

- are **robust and hard wearing**
- achieve **excellent durability**
- provide **additional responsiveness to the steering**

Advantages of our axial rod & gaiter kits:

- convenient as they give the installer **all the necessary components** for the repair
- by replacing all components at the same time, you can guarantee a superior quality repair that is achieved in **less time** than with separate visits to the workshop
- **reduction in inventory** and in shelf space required to stock
- a superior quality product backed up with the MOOG **3 year guarantee***

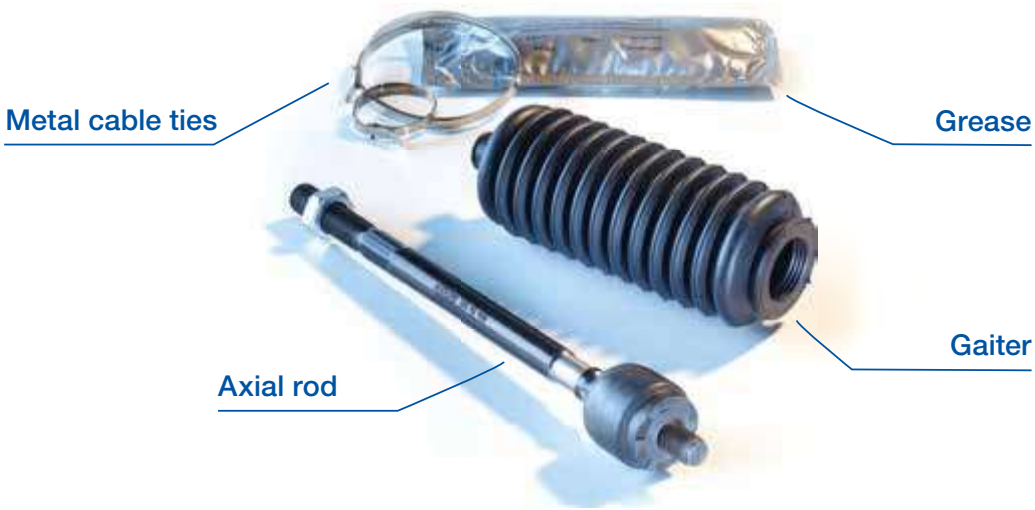

* Terms and conditions apply. Countries in which the 3 years guarantee is applicable: All European Union countries, Norway, Switzerland, Serbia, Bosnia-Herzegovina, Montenegro, Kosovo, Albania and Macedonia. Страны, в которых действует срок гарантии 3 года: Все страны Европейского союза, Норвегия, Швейцария, Сербия, Босния и Герцеговина, Черногория, Косово, Албания и Македония.

FD-ES-1536
98AG3290AA, 98AX3270BA,
1074306, 1107015
1824

Stilo
CHEVROLET
OMP
OMP
CAAL
WHELEN
MOOG
MOOG
NASCAR
WHELEN
EURO SERIES

OFFICIAL STEERING & SUSPENSION OF NASCAR

OFFICIAL STEERING AND SUSPENSION PARTNER OF NASCAR®

Since 1966, the MOOG brand carried every NASCAR Cup Series champion to victory.

MOOG has the expertise to bring you a full range of high quality solutions for both light and commercial vehicle categories.

More info on **moogparts.eu**

STEERING

Axial Rods | Drag Links & Centre Arms | Steering Rack Gaiter Kits | Tie Rods Assemblies | Tie Rod Ends

SUSPENSION

Ball Joints | Link Stabilisers | Rubber-to-Metal | Track Control Arms | Wishbones

©2018 Federal-Mogul Global Aftermarket EMEA, BVBA. NASCAR is a registered trademark of the National Association for Stock Car Auto Racing, Inc. NASCAR Whelen Euro Series is a registered trademark of SARL DutyCar.
The NASCAR WHELEN Euro SeriesTM logo and word mark are used under license by the National Association for Stock Car Auto Racing, Inc., and Whelen Engineering Company, Inc.
All other trademarks shown are owned by Federal-Mogul LLC, or one or more of its subsidiaries, in one or more countries.

PART NUMBER STRUCTURE

MOOG #	EN	FR	DE	ES	IT	NL	PL	RU
BJ XX-**BJ**-1234	Ball joint	Rotule de suspension	Führungs-/ Traggelenk	Rótula de suspensión	Snodo sospensione	Fuseekogel	Sworzeń kulisty	Шаровой шарнир
BK K15 K151234 - XX-**BK**-1234	Steering Rack Gaiter kit	kit de soufflet de crémaillère de direction	Faltenbalg-satz für Zahnstangen-lenkungen	Guarda-polvos de dirección	Kit cuffie scatola sterzo	Stofhoezen-kit stuur-inrichting	Zestaw Osłon Gumowych Przekładni Kierowniczej	Комплект пыльников рулевой рейки
ES K151234 - XX-**ES**-1234	Tie Rod End	Rotule de direction extérieure	Kugelgelenk	Rótula de dirección	Testina sterzo	Spoorstang-eind	Końcówka drążka kierowniczego	Рулевой наконечник
DS XX-**DS**-1234	Tie Rod assembly	Biellette de direction	Lenkstange (Verbin-dungs stange)	conjunto de dirección	Tirante assiale	Complete Spoorstang	Drążek kierowniczy kompletny	Рулевая тяга в сборе
WB XX-**WB**-1234	Wheel Bearings	Roulement de roue	Radlager	Roda-mientos de rueda	Cuscinetti ruota	Wiellagers	Łożyska kół	Подшипники колеса
LS XX-**LS**-1234	Link Stabilizer	Biellette de barre stabilisatrice	Koppelstange	varilla estabilizadora	Barra stabi-lizzatrice	Stabilisator-stang-verbinding	Łącznik stabilizatora	Стойка стаби-лизатора

GR	PT	CZ	RO	HU	BG	SL	AR
Σφαιρικος συνδεσμος	Rótula	Kulový kloub	Pivot	Gömbcsukló	Шарнирен болт	Krogelni zgib	وصلة كروية
Κιτ φουσκας κρεμαπερας	Kit de foles de direcção	Sady ochranných manžet řízení	Kit burduf casetă de direcție	A kormánymű porvédő-gumiharang készlet	Комплекти маншони на предавателната рейка	Komplet manšet krmilnega gonila	أطقم جلب عمود التوجيه
Ακρομπαρο	Cabeça da ponteira da direcção	Hlava tyče řízení	Cap de bară	Kormányössze-kötő gömbfej	Кормилен накрайник външен	Zglob jarmovega droga	طرف قضبان الربط
Συναρμογη ακρομπαρου	Conjunto da cabeça da direcção	Sestava tyče řízení	Bieletă de direcție completă	Kormányössze-kötő szerelvény	Кормилен накраиник вътрешен	Sestav jarmovega droga	مجموعة قضبان الربط
Ρουλεμαν τροχου	Rolamentos da roda	Kolová ložiska	Rulmenți de roată	Kerékcsapágyak	Лагери за главини	Kolesni ležaji	محامل عجلات
Ραβδος εξισορροπησης	Elo da Barra Estabilizadora	Stabilizátor	Bieletă stabilizatoare	Stabilizátor-összekötő	Стабилизираща щанга	Končnik stabilizatorja	وصلة وحدة لتثبيت

PART NUMBER STRUCTURE

MOOG #	EN	FR	DE	ES	IT	NL	PL	RU
WP XX-**WP**-1234	Wishbone arm	Triangle de suspension	Quer- oder Schräg-lenker	Trapecio de suspensión	Braccio oscillante	Driehoeks-draagarm	Wahacz zawieszenia	Треугольный рычаг независимой подвески
AX XX-**AX**-1234	Axial Rod	Rotule de direction intérieure	Axialgelenk	Rótula axial	Tirante assiale	Stuurstang	Drążek osiowy	Осевой шарнир
PA XX-**PA**-1234	Pitman Arms / Idler Arms	Levier de direction	Spurstange	Brazos auxiliar o pitman	Leva Di Rinvio Sterzo	Pitmanarmen	Wspornik	Маятниковые рычаги / рычаги сошки
RK XX-**RK**-1234	Repair Kit	Kit de réparation	Reparatur-satz	Kit de reparación	Kit di riparazione	Reparatiekit	Zestaw naprawczy	Ремонтный комплект
TC XX-**TC**-1234	Track Control Arm	Bras de suspension	Querlenker	Brazo de suspensión	Braccetto	Draagarm	Wahacz zawieszenia	Рычаг подвески
SB XX-**SB**-1234	Bushes	Silentblocs	Silent-Block	Silentblocs	Boccole	Silent-Block	Tuleje	Втулки

GR	PT	CZ	RO	HU	BG	SL	AR
Ψαλιδι	Braço sobreposto	Příčné trojúhelníkové rameno	Braț suspensie	Lengőkar	Носач	Prema	ذراع توصيل على شكل Y
Αξονικη ραβδος (Ημιμπαρο)	Barra axial	Axiální tyč	Cap interior bieletă de direcție	Axialcsukló	Кормилна щанга	Vzvod končnika	قضبان محوري
Βραχιονας Πυξιδας Pitman / Αδρανης Βραχιονας	Braços da biela/ braços de guia	Hlavní páka řízení / pomocná páka řízení	Braț Pittman	Kormánykarok/ segédirányító karok	Паразитни хебели	Krmilni/jarmovi vzvodi	أذرع بتمان/ الأذرع الوسيطة
Κιτ Επισκευης	Kit de reparação	Souprava pro opravy	Kit de reparație	Javítókészlet	Ремонтен комплект	Nadomestni kom-plet	طقم الإصلاح
Βραχιονας αναρτησης	Braço de controlo transversal	Příčné rameno nápravy	Braț de suspensie	Keresztlengőkar	Носач	Prečno vodilo	ذراع التحكم في المسار
Ελαστικος τριβεας (Σινεμπλοκ)	Casquilhos	Pouzdra	Bucşe	Szilentek	Втулки	Puše	جلب

GLOSSARY

ITEM	EN	FR	DE	ES	IT	NL	PL	RU
	Front axle	Essieu avant	Vorderachse	Eje delantero	Assle anteriore	Vooras	Oś przednia	Передняя ось
	Rear axle	Essieu arrière	Hinterachse	Eje trasero	Assale posteriore	Achteras	Oś tylna	Задняя ось
	Fitting position: left	Côté d'assemblage: à gauche	Einbauseite: links	Posición de montaje: izquierda	Posizione di montaggio: sinistra	Inbouwzijde: links	Miejsce montażu: lewa	Положение установки: слева
	Fitting position: right	Côté d'assemblage: à droite	Einbauseite: rechts	Posición de montaje: derecha	Posizione di montaggio: destra	Inbouwzijde: rechts	Miejsce montażu: prawa	Положение установки: справа
	Fitting position: both sides	Côté d'assemblage: côtés gauche et droit	Einbauposition: beidseitig	Posición de montaje: ambos lados	Posizione di montaggio: entrambi i lati	Inbouwzijde: aan beide zijden	Miejsce montażu: obie strony	Положение установки: с обеих сторон
	Fitting position: centre	Côté d'assemblage: centré	Einbauseite: Mitte	Posición de montaje: centro	Posizione di montaggio: centrale	Inbouwzijde: midden	Miejsce montażu: środek	Положение установки: посередине
	For vehicles without power steering	Pour véhicule sans direction assistée	Für Fahrzeuge ohne Servolenkung	Para vehículos sin dirección asistida	Per veicoli senza servosterzo	Voor voertuigen zonder stuur-bekrachtiging	Dla samochodów bez wspomagania układu kierowniczego	Для автомобилей с рулевым управлением без усилителя
	For vehicles with power steering	Pour véhicule avec direction assistée	Für Fahrzeuge mit Servolenkung	Para vehículos con dirección asistida	Per veicoli con servosterzo	Voor voertuigen met stuur-bekrachtiging	Dla samochodów ze wspomaganiem układu kierowniczego	Для автомобилей с рулевым управлением с усилителем
	Length [mm]	Longueur [mm]	Länge [mm]	Longitud [mm]	Lunghezza [mm]	Lengte [mm]	Długość [mm]	Длина [мм]
	Diameter [mm] …	Diamètre [mm] ...	Durchmesser [mm] …	Diámetro [mm]	Diametro [mm]	Diameter [mm]	Średnica [mm]	Диаметр [мм]...
	Cone size [mm]	Dimension du cône [mm]	Konusmaß [mm]	Tamaño del cono [mm]	Dimensione cono [mm]	Conusmaat [mm]	Rozmiar stożka [mm]	Размер конуса [мм]
M12x1.5	Thread size	Dimension de filetage	Gewindemaß	Tamaño de la rosca	Dimensione filettatura	Schroefdraad--maat	Rozmiar gwintu [mm]	Размер резьбы
	Rod/strut, stabiliser	Entretoise/tige, stabilisateur	Stange/Strebe, Stabilisator	Barra transversal, estabilizadora	Barra/puntone, stabilizzatore	Stabilisatorstang	Drążek/podpora, stabilizator	Стойка/тяга стабилизатора
	Mounting, stabiliser	Suspension, stabilisateur	Lagerung, Stabilisator	Soporte, estabilizador	Montaggio, stabilizzatore	Stabilisatorlager aan draagarm	Uchwyt, stabilizator	Крепление стабилизатора
Al	Material: aluminium	Matériau: aluminium	Material: Aluminium	Material: aluminio	Materiale: alluminio	Materiaal: aluminium	Materiał: aluminium	Материал: алюминий
Fe	Material: metal	Matériau: métal	Material: Stahl	Material: metal	Materiale: metallo	Materiaal: metaal	Materiał: metal	Материал: металл
P	Material: synthetic material	Matériau: matière plastique	Material: Kunststoff	Material: material sintético	Materiale: materiale sintetico	Materiaal: synthetisch materiaal	Materiał: materiał syntetyczny	Материал: синтетический материал

GR	PT	CZ	RO	HU	BG	SL	AR
Μπροστινός άξονας	Eixo dianteiro	Přední náprava	Punte față	Elsőtengely	Предна ос	Sprednja prema	محور أمامي
Πίσω άξονας	Eixo traseiro	Zadní náprava	Punte spate	Hátsótengely	Задна ос	Zadnja prema	محور خلفي
Θέση τοποθέτησης: αριστερά	Posição de montagem: esquerda	Montážní poloha: vlevo	Poziție montaj: stânga	Beépítési helyzet: bal	Положение за монтаж: ляво	Položaj namestitve: levo	وضع التثبيت: جهة اليسار
Θέση τοποθέτησης: δεξιά	Posição de montagem: direita	Montážní poloha: vpravo	Poziție montaj: dreapta	Beépítési helyzet: jobb	Положение за монтаж: дясно	Položaj namestitve: desno	وضع التثبيت: جهة اليمين
Θέση τοποθέτησης: και στις δύο πλευρές	Posição de montagem: ambos os lados	Montážní poloha: obě strany	Poziție montaj: ambele părți	Beépítési helyzet: mindkét oldal	Положение за монтаж: от двете страни	Položaj namestitve: obojestransko	وضع التثبيت: كلا الجانبين
Θέση τοποθέτησης: κέντρο	Posição de montagem: centro	Montážní poloha: střed	Poziție montaj: centru	Beépítési helyzet: középső	Положение за монтаж: в центъра	Položaj namestitve: sredina	وضع التثبيت: المنتصف
Για οχήματα χωρίς υδραυλικό τιμόνι	Para veículos sem direcção assistida	Pro vozidla bez posilovače řízení	Pentru vehicule fără servodirecție	Szervokormány nélküli járművekhez	За автомобили без сервоуправление	Za vozila brez servo krmiljenja	للمركبات غير المزودة بخاصية التوجيه الآلي
Για οχήματα με υδραυλικό τιμόνι	Para veículos com direcção assistida	Pro vozidla s posilovačem řízení	Pentru vehicule cu servodirecție	Szervokormányos járművekhez	За автомобили със сервоуправление	Za vozila s servo krmiljenjem	للمركبات المزودة نظام التوجيه المعزز آليا
Μήκος [mm]	Comprimento [mm]	Délka [mm]	Lungime [mm]	Hossz [mm]	Дължина [mm]	Dolžina [mm]	الطول [ملم]
Διάμετρος [mm] …	Diâmetro [mm] …	Průměr [mm] …	Diametru [mm] …	Átmérő [mm] …	Диаметър [mm]	Premer [mm] …	القطر [ملم]
Μέγεθος κώνου [mm]	Medida do cone [mm]	Velikost kužele [mm]	Dimensiune con [mm]	Kúp mérete [mm]	Размер на конуса [mm]	Velikost stožca [mm]	مقاس المخروط [ملم]
Μέγεθος σπειρώματος	Medida da rosca	Velikost závitu	Dimensiune filet	Menet mérete	Размер на резбата	Velikost navoja	مقاس السن
Βραχίονας σταθεροποίησης μπάρας τιμονιού	Barra de direcção, barra estabilizadora	Tyč/vzpěra, stabilizátor	Braț/jambă suspensie, stabilizator	Rúd/rugóstag, stabilizátor	Плът / подпора, стабилизатор	Drog/noga, stabilizator	قضيب/دعامة، مثبت
Πλαίσιο στήριξης βραχίονα σταθεροποίησης	Suporte, estabilizador	Uložení, stabilizátor	Prindere, stabilizator	Rögzítés, stabilizátor	Монтиране, стабилизатор	Pritrditev, stabilizator	تثبيت، مثبت
Υλικό: αλουμίνιο	Material: alumínio	Material: hliník	Material: aluminiu	Anyag: alumínium	Материал: алуминий	Material: aluminij	المادة: ألمنيوم
Υλικό: μέταλλο	Material: metal	Material: kov	Material: metal	Anyag: fém	Материал: метал	Material: kovina	المادة: معدن
Υλικό: συνθετικό υλικό	Material: material sintético	Material: syntetický materiál	Material: material sintetic	Anyag: műanyag	Материал: синтетичен материал	Material: sintetični material	المادة: مادة صناعية

GLOSSARY

ITEM	EN	FR	DE	ES	IT	NL	PL	RU
	With left-hand thread	Avec filetage à gauche	Mit Linksgewinde	Con rosca a izquierdas	Con filetto sinistro	Met linkse schroefdraad	Z gwintem lewym	С левой резьбой
	With right-hand thread	Avec filetage à droite	Mit Rechtsgewinde	Con rosca a derechas	Con filetto destro	Met rechtse schroefdraad	Z gwintem prawym	С правой резьбой
✓	For steering rack manufacturer …	Pour fabricants de boîtiers de direction ...	Für Lenkgetriebe-hersteller …	Válido para cremallera de dirección marca....	Per il produttore scatola sterzo …	Voor stuurdelen fabrikant …	Dla produ-centa przekładni zębatkowej	Для производителя рулевой рейки...
✗	Not for steering rack manufac-turer …	Sauf pour fabri-cants de boîtiers de direction ...	Nicht für Lenkgetriebe-hersteller …	No es válido para cremallera de dirección marca...	Non per il produttore scatola sterzo …	Niet voor stuurdelen fabrikant …	Nie dla produ-centa przekładni zębatkowej	Не для производителя рулевой рейки...
…	Only in connection with…	Uniquement en connexion avec ...	Nur in Verbindung mit ...	Únicamente en conexión con...	Solo in relazione a …	Alleen in combinatie met ...	Tylko w połączeniu z…	Только совместно с ...
OE…	For OE number …	Pour numéro OE ...	Für OE-Nummer ...	Para el número de equipo original...	Per codice OE …	Voor OE-nummer …	Dla numeru OE …	Для номера OE ...
2	Number of fastening bores : 2	Nombre d'alésages de fixa-tion : 2	Anzahl der Befestigungs-bohrungen: 2	Número de agu-jeros de cierre: 2	Numero di fori di fissaggio: 2	Aantal beschik-bare boringen: 2	Liczba otworów mocujących : 2	Количество отверстий для крепления: 2
	Mounting type : bolt connection	Type de montage : raccord à vis	Montageart: Schraubenschluss	Tipo de soporte: conexión de los pernos	Tipo montaggio: con bulloni	Bevestigingstype: boutverbinding	Typ połączenia : przykręcany śrubami	Тип монтажа: болтовое соединение
	Mounting type : press-fitted	Type de montage : monté à force	Montageart: aufgepresst	Tipo de soporte: montado a presión	Tipo montaggio: a pressione	Bevestigingstype: persfitting	Typ połączenia : wtłaczane	Тип крепления: запрессовка
	Mounting type : bolted	Type de montage : monté à l'aide d'un boulon	Montageart: geschraubt	Tipo de soporte: atornillado	Tipo montaggio: imbullonato	Bevestigingstype: geschroefd	Typ połączenia : wkręcane	Тип крепления: болтовое
Ø	Bore Ø [mm]	Alésage Ø [mm]	Bohrung Ø [mm]	Diámetro Ø [mm]	Alesaggio Ø [mm]	Naaf boring Ø [mm]	Średnica Ø [mm]	Диаметр отверстия Ø [мм]
	For coil-spring suspension vehicles	Pour véhicules avec suspension hélicoïdale	Für Fahrzeuge mit Schraubenfedern	Para vehículos con suspensión de muelle en espiral	Per veicoli con sospensioni a molla	Voor voertuigen met schroefvering	Dla pojazdów z zawieszeniem na sprężynach śrubowych	Для автомобилей с пружинной подвеской
	For leaf-spring suspension vehicles	Pour véhicules avec suspension à lames	Für Fahrzeuge mit Blattfedern	Para vehículos con suspensión de ballesta	Per veicoli con sospensioni a balestra	Voor voertuigen met bladvering	Dla pojazdów z zawieszeniem na resorach	Для автомобилей с рессорной подвеской
	For vehicles with-out sports sus-pension	Pour véhicules sans châssis sportif	Für Fahrzeuge ohne Sportfahrwerk	Para vehículos sin suspensión deportiva	Per veicoli senza sospensioni sportive	Voor voertuigen zonder sportophanging	Dla pojazdów bez zawieszenia sportowego	Для автомобилей без спортивной подвески
	For vehicles with sports suspension	Pour véhicules avec châssis sportif	Für Fahrzeuge mit Sportfahrwerk	Para vehículos con suspensión deportiva	Per veicoli con sospensioni sportive	Voor voertui-gen met sport-ophanging	Dla pojazdów z zawieszeniem sportowym	Для автомобилей со спортивной подвеской
Ø	Rim size [in]	Dimension de la jante [pouces]	Felgengröße [Zoll]	Diámetro de llanta (pulg.)	Dimensioni cerchione (pollici)	Velgmaat [inch]	Rozmiar obręczy	Размер диска [дюйм]
	Tyre size	Dimensions du pneu	Reifenabmessung	Tamaño del neumático	Dimensioni pneumatico	Bandenmaat	Rozmiar opony	Размер шины

GR	PT	CZ	RO	HU	BG	SL	AR
Με αριστερόστροφο σπείρωμα	Com rosca esquerda	S levotočivým závitem	Cu filet pe stânga	Balmenetes	С лява резба	Z levim navojem	مزود بسن ايمن اللولب
Με δεξιόστροφο σπείρωμα	Com rosca direita	S pravotočivým závitem	Cu filet pe dreapta	Jobbmenetes	С дясна резба	Z desnim navojem	مزود بسن أيسر اللولب
Για κατασκευαστή κρεμαγιέρας …	Para fabricantes de cremalheira da direcção...	Pro výrobce hřebenu řízení ...	Pentru producător de cremalieră direcție...	Kormányműfogasléc-gyártóknak …	За производител на предавателна рейка ...	Za proizvajalca krmilnega gonila …	مخصص لمصنعي أعمدة التوجيه
Όχι για κατασκευαστή κρεμαγιέρας …	Não para fabricantes de cremalheira da direcção...	Nikoliv pro výrobce hřebenu řízení ...	Nu pentru producător de cremalieră direcție...	Kormányműfogasléc-gyártóknak nem …	Не за производител на предавателна рейка ...	Ni za proizvajalca krmilnega gonila …	غير مخصص لمصنعي أعمدة التوجيه
Μόνο σε συνδυασμό με…	Apenas em ligação com…	Pouze v souvislosti s ...	Doar împreună cu...	Csak együtt ezzel: …	Само във връзка с...	Samo v povezavi z …	لا يستخدم إلا مع
Για αριθμό OE …	Para número OE...	Pro číslo OE ...	Pentru număr OE...	A következő gyári számhoz: …	За номер на оригинална част ...	Za številko originalnega dela …	خاص برقم المعدة الأصلية
Αριθμός οπών στερέωσης: 2	Número de furos de fixação: 2	Počet upevňovacích otvorů: 2	Număr de găuri de fixare: 2	Rögzítőfuratok száma: 2	Брой на отвори за затягане: 2	Število pritrdilnih vrtin: 2	عدد فتحات التثبيت: 2
Τύπος συναρμογής: με μπουλόνια	Tipo de apoio: conjunto parafuso	Typ upevnění: šroubový spoj	Tip montare: cu şurub	Rögzítés módja: csavarkötés	Тип монтаж: съединение с болт	Vrsta pritrditve : povezava z vijakom	كيفية التثبيت: التثبيت بمسمار ملولب
Τύπος συναρμογής: πρεσαριστή προσαρμογή	Tipo de apoio: montado sob pressão	Typ upevnění: lisováním	Tip montare: îmbinare prin presare	Rögzítés módja: sajtoló illesztés	Тип монтаж: монтира се с натиск	Vrsta pritrditve : pritisno	كيفية التثبيت: التثبيت بالضغط
Τύπος συναρμογής: βιδωτό	Tipo de apoio: aparafusado	Typ upevnění: šroubový spoj	Tip montare: cu bulon	Rögzítés módja: csavarozott	Тип монтаж: с болт	Vrsta pritrditve : privito	كيفية التثبيت: الغلق
Διάμετρος Ø [mm]	Ø do furo [mm]	Vrtání ø [mm]	Alezaj Ø [mm]	Furat Ø [mm]	Ø на отвора [mm]	Premer vrtine [mm]	الثقب Ø [ملم]
Για οχήματα που διαθέτουν ανάρτηση με ελικοειδή ελατήρια	Para veículos com suspensão de molas helicoidais	Pro vozidla s pérováním vinutými pružinami	Pentru vehicule cu suspensie pe arcuri elicoidale	Tekercsrugós járművekhez	За автомобили с окачване със спирална пружина	Za vozila z vzmetenjem z vijačno vzmetjo	للتعليق بالياي اللولبي
Για οχήματα που διαθέτουν ανάρτηση με φυλλοειδή ελατήρια	Para veículos com suspensão de molas de lâminas	Pro vozidla s pérováním listovými pery	Pentru vehicule cu suspensie pe arcuri lamelare	Laprugós járművekhez	За автомобили с окачване с листов ресор	Za vozila z vzmetenjem z listnato vzmetjo	للتعليق بالياي الورقي
Για οχήματα χωρίς σπορ ανάρτηση	Para veículos sem chassis desportivo	Pro vozidla bez sportovního zavěšení kol	Pentru vehicule fără suspensie sport	Nem sportfutóműves járművekhez	За автомобили без спортно окачване	Za vozila brez športnega vzmetenja	للسيارات غير المزودة بخاصية التعليق الرياضي
Για οχήματα με σπορ ανάρτηση	Para veículos com chassis desportivo	Pro vozidla se sportovním zavěšením kol	Pentru vehicule cu suspensie sport	Sportfutóműves járművekhez	За автомобили със спортно окачване	Za vozila s športnim vzmetenjem	للسيارات المزودة بخاصية التعليق الرياضي
Μέγεθος ζάντας [in]	Diâmetro da jante [polegadas]	Velikost ráfku [palce]	Dimensiune jantă [in]	Keréktárcsa átmérője [col]	Размер на джантата [in]	Velikost platišča [palci]	مقاس الحافة [بوصة]
Μέγεθος ελαστικού	Medidas do pneu	Velikost pneumatik	Dimensiune pneu	Abroncsméret	Размер на гумата	Dimenzija pnevmatik	مقاس الإطار

GLOSSARY

ITEM	EN	FR	DE	ES	IT	NL	PL	RU
	For automatic transmission	Pour boîtes de vitesses automatiques	Für Automatik-getriebe	Caja de cambios automática	Per cambio automatico	Voor automatische transmissie	Dla automatycznej skrzyni biegów	Для автоматической коробки передач
	For manual transmission	Pour boîtes de vitesses manuelles	Für Schaltgetriebe	Caja de cambios manual	Per cambio manuale	Voor hand-geschakelde transmissie	Dla mechanicznej skrzyni biegów	Для механической коробки передач
✓ AS	For vehicle with ASB	Pour véhicule avec ASB	Für Fahrzeuge mit ASB	Para vehículo con ASB	Per veicoli con ASB	Voor voertuig met ASB	Dla pojazdów z ASB	Для автомобиля с системой ASB
	Disc brake	Frein à disques	Scheibenbremse	Freno de disco	Freni a disco	Schijfrem	Hamulec tarczowy	Дисковый тормоз
	Drum brake	Frein à tambour	Trommelbremse	Freno de tambor	Freni a tamburo	Trommelrem	Hamulec bębnowy	Барабанный тормоз
	Number of teeth	Nombre de dents	Anzahl der Zähne	Número de dientes	Numero denti	Aantal tanden	Liczba zębów	Количество зубьев
❸❹❺	Rim holes	Trous de jante	Felgenlöcher	Número de orificios en la llanta	Fori del cerchio	Velggaten	Otwory obręczy	Отверстия колесного диска
✓ AXLE	Axle reference	Référence de l'essieu	Achsreferenz	Referencia del eje	Riferimento assale	Asreferentie	Nr referencyjny osi	Обозначение оси
	Twin wheel	Roues jumelées	Zwillingsrad	Rueda gemela	Ruota gemellata	Dubbele wielen	Koła bliźniacze	Сдвоенные колеса
✓ RWD	Rear wheel drive	Véhicule à propulsion	Heckantrieb	Tracción trasera	Trazione posteriore	Achterwiel-aandrijving	Napęd tylny	Задний привод
	Single wheel	Roue simple	Einzelnes Rad	Rueda sencilla	Ruota singola	Enkel wiel	Koła pojedyncze	Одинарное колесо
	For axle …	Pour essieu ...	Für Achse ...	Para el eje...	Per assale ...	Voor as …	Dla osi …	Для оси...
3	Number of fastening bores: 3	Nombre d'alésages de fixa-tion : 3	Anzahl der Befestigungs-bohrungen: 3	Número de agujeros de cierre: 3	Numero di fori di fissaggio: 3	Aantal beschik-bare boringen: 3	Liczba otworów mocujących: 3	Количество отверстий для крепления: 3
	Steering box	Boîtier de direction	Lenkgetriebe	Caja de dirección	Scatola sterzo	Stuurhuis	Przekładnia kierownicza	Картер рулевого механизма
Electric	Electric power steering	Direction assistée électrique	Elektrische Servolenkung	Dirección asistida eléctrica	Servosterzo elettrico	Elektrische stuur-bekrachtiging	Wspomaganie elektryczne przekładni kierowniczej	Электрический усилитель рулевого управления
Hydraulic	Hydraulic power steering	Direction assistée hydraulique	Hydraulische Servolenkung	Dirección asistida hidráulica	Servosterzo idraulico	Hydraulische stuurbekrachtiging	Wspomaganie hydrauliczne przekładni kierowniczej	Гидравлический усилитель рулевого управления
SWB	Short wheelbase	Empattement court	Kurzer Radstand	Distancia entre ejes corta	Interasse corto	Korte wielbasis	Krótki rozstaw kół	Короткая колесная база
LWB	Long wheelbase	Empattement long	Langer Radstand	Distancia entre ejes larga	Interasse lungo	Lange wielbasis	Długi rozstaw kół	Длинная колесная база

GR	PT	CZ	RO	HU	BG	SL	AR
Για αυτόματο κιβώτιο ταχυτήτων	Para caixa de velocidades automática	S automatickou převodovkou	Pentru cutie viteze automată	Automatikus váltóhoz	За автоматична скоростна кутия	Za samodejne menjalnike	لناقل الحركة الأوتوماتيكي
Για μηχανικό κιβώτιο ταχυτήτων	Para caixa de velocidades manual	S manuální převodovkou	Pentru cutie viteze manuală	Kéziváltóhoz	За ръчна скоростна кутия	Za ročne menjalnike	لنقل الحركة اليدوي
Για όχημα με ASB	Para veículos com ASB	Pro vozidla s ASB	Pentru vehicul cu ASB	ASB-vel szerelt járművekhez	За автомобили с ASB	Za vozila z zavornim sistemom ABS	للمركبات المزودة بخاصية ASB
Δισκόφρενο	Travão de disco	Kotoučové brzdy	Frână cu discuri	Tárcsafék	Дискова спирачка	Kolutna zavora	فرامل قرصية
Ταμπούρο	Travão de tambor	Bubnová brzda	Frână cu tambur	Dobfék	Барабанна спирачка	Bobnasta zavora	فرامل أسطوانية
Αριθμός δοντιών	Número de dentes	Počet zubů	Număr de dinți	Fogszám	Брой зъбци	Število zob	عدد السنون
Οπές ζάντας	Furos da jante	Otvory v ráfku	Găuri jantă	Felni lyukjai	Отвори на джантата	Odprtine v platišču	فتحات الإطار
Κωδικός άξονα	Referência do eixo	Referenční číslo nápravy	Referință punte	Tengely referen-ciaszáma	Справка за оста	Referenca za premo	رقم المحور
Δίδυμος τροχός	Rodado duplo	Dvojmontáž	Roată dublă	Ikerkerék	Двойно колело	Dvojna kolesa	عجلة مزدوجة
Πίσω κίνηση	Tracção traseira	Pohon zadních kol	Tracțiune pe roți spate	Hátsókerékhajtás	Задно задвижване	Pogon na zadnja kolesa	دفع العجلة الخلفية
Μονός τροχός	Rodado simples	Jednomontáž	Roată simplă	Egy kerék	Единично колело	Enojno kolo	عجلة فردية
Για άξονα …	Para eixo...	Pro nápravu ...	Pentru punte...	A következő tengelyhez: …	За ос ...	Za premo …	للمحور
Αριθμός οπών στερέωσης: 3	Número de furos de fixação: 3	Počet upevňovacích otvorů: 3	Numărul găurilor de fixare: 3	Rögzítőfuratok száma: 3	Брой на отвори за затягане: 3	Število pritrdilnih vrtin: 3	عدد فتحات التثبيت: 3
Πυξίδα διεύθυνσης	Caixa de direcção	Skříň řízení	Casetă direcție	Kormányműház	Кутия на кормилното управлението	Ohišje gonila za krmiljenje koles	صندوق التوجيه
Ηλεκτρικό τιμόνι	Direcção assistida eléctrica	Elektrický posilovač řízení	Direcție asistată electric	Elektromos szervokormány	Кормилно управление с електрическа мощност	Električno servo krmiljenje	آلية التوجيه الكهربائية
Υδραυλικό τιμόνι	Direcção assistida hidráulica	Hydraulické servořízení	Direcție asistată hidraulic	Hidraulikus szervokormány	Кормилно управление с хидравлична мощност	Hidravlično servo krmiljenje	آلية التوجيه الإلكتروهيدروليكية
Κοντό μεταξόνιο	Curta distância entre eixos	Krátký rozvor	Ampatament scurt	Rövid tengelytáv	Къса колесна база	Kratko medosje	قاعدة عجلة قصير
Μακρύ μεταξόνιο	Longa distância entre eixos	Dlouhý rozvor	Ampatament lung	Hosszú tengelytáv	Дълга колесна база	Dolgo medosje	قاعدة عجلة طويلة

GLOSSARY

ITEM	EN	FR	DE	ES	IT	NL	PL	RU
G	Generic drawing	Plan générique	Allgemeine Zeichnung	Dibujo genérico	Disegno generale	Overzichts-tekening	Rysunek	Чертеж общего вида
ESP	Electronic Stability Program	Correcteur électronique de trajectoire	Elektronisches Stabilitäts-programm	Programa de esta-bilidad electrónica	Programma Elettronico di Stabilità (ESP)	Elektronisch stabiliteits-programma	Program stabili-zacji elektronicznej ESP	Система курсовой устойчивости
AB	ABS	ABS	ABS	ABS	ABS	ABS	ABS	ABS
Bus	MiniBus	Minibus	Minibus	Microbús	MiniBus	Minibus	Minibus	Микроавтобус
Box	Van	Fourgon	Kleintransporter	Furgoneta	Furgone	Bestelauto	Van	Фургон
Flatbed / Chassis	Flatbed / Chassis	Plateforme / Châssis	Pritsche / Fahrgestell	Superficie plana / chasis	Pianale / Telaio	Laadbak/chassis	Płaski / Nadwozie	Плоская платформа / шасси
Inner	Inner	Intérieur	Innen	Interior	Interno	Binnen	Wewnętrzny	Внутренний
Outer	Outer	Extérieur	Außen	Exterior	Esterno	Buiten	Zewnętrzny	Наружный
Cast Iron	Cast iron	Fonte	Gussstahl	Fundición	Ghisa	Gietijzer	Żeliwo	Чугун
Forged Steel	Forged steel	Acier forgé	Schmiedestahl	Acero forjado	Acciaio forgiato	Gesmeed staal	Stal kuta	Кованая сталь
RP →	From RP/ORG Number	À partir de n° d'organisation	Von RP/ORG-Nummer	Desde el número RP/ORG	Da numero RP/ ORG	Vanaf RP/ORG-nummer	Od RP/ Numer ORG	С номера RP/ORG
VET →	From VET number	À partir du numéro VET	Von VET-Nummer	Desde el número VET	Da numero VET	Vanaf VET-nummer	Od numer VET	С номера VET
CH →	From chassis Number	À partir du numéro de châssis	Von Fahrgestell-nummer	Desde el número de chasis	Da numero telaio	Vanaf chassis-nummer	Od numeru nadwozia	С номера шасси
PR	For PR number …	Pour numéro PR ...	Für PR-Nummer ...	Para el número PR...	Per numero PR …	Voor PR-nummer …	Dla numeru PR …	Для номера PR...
With mounting bolt	With mounting bolt	Avec boulon de fixation	Mit Befestigungs-schraube	Con el perno de soporte	Con bullone di montaggio	Met bevestigings-bout	Z mocującą śrubą	Болтовое соединение
	For right-hand drive vehicles	Pour conduite à droite	Für Fahrzeuge mit Rechtslenkung	Para vehículos con conducción a la derecha	Per veicoli con guida a destra	Voor rechtsgestuurde voertuigen	Dla pojazdów z kierownicą po prawej stronie	Для автомобилей с правосторонним управлением
	For left-hand drive vehicles	Pour conduite à gauche	Für Fahrzeuge mit Linkslenkung	Para vehículos con conducción a la izquierda	Per veicoli con guida a sinistra	Voor linksgestuurde voertuigen	Dla pojazdów z kierownicą po lewej stronie	Для автомобилей с левосторонним управлением
	Wheel bearing	Roulement de roue	Radlager	Rodamiento de la rueda	Cuscinetto ruota	Wiellager	Łożysko koła	Подшипник колеса

GR	PT	CZ	RO	HU	BG	SL	AR
Γενικό σχέδιο	Desenho geral	Generické výkresy	Schiță generică	Általános rajz	Общ чертеж	Splošna skica	سحب عام
Ηλεκτρονικό πρόγραμμα ευστάθειας	Programa de estabilidade electrónica	Elektronický stabilizační program	Program Electronic de Stabilitate	ESP	Електронна програма за стабилност	Elektronski nadzor stabilnosti	برنامج الثبات الإلكتروني
ABS	ABS	ABS	ABS	ABS	ABS	ABS	نظام الفرامل المانع للانغلاق (ABS)
Μικρό λεωφορείο	Carrinha de passageiros	MiniBus	Microbuz	Kisbusz	Минибус	MiniBus	حافلة صغيرة
Μικρό φορτηγό	Carrinha	Dodávkový vůz	Furgonetă	Kisteherautó	Ван	Dostavno vozilo	شاحنة
Καρότσα / Πλαίσιο	Carrinha de carga/ Chassis	Valník/podvozek	Necarosat / Şasiu	Plató / alváz	Платформа / шаси	Keson / šasija	شاحنة مستوية السطح / الشاسيه
Εσωτερικό	Interior	Vnitřní	Interior	Belső	Вътрешен	Notranji	داخلي
Εξωτερικό	Exterior	Vnější	Exterior	Külső	Външен	Zunanji	خارجي
Χυτοσίδηρος	Ferro fundido	Litina	Fontă	Öntöttvas	Чугун	Litoželezo	حديد زهر
Σφυρήλατος χάλυβας	Aço forjado	Kovaná ocel	Oțel forjat	Kovácsoltvas	Ковано желязо	Kovano jeklo	فولاذ مشكل
Από αριθμό RP/ORG	A partir do n.º de organização/ORG	Od čísla RP/ORG	De la numărul RP/ORG	A következő RP/ORG számtól:	От номер RP/ORG	Od številke RP/ORG	من رقم RP/ORG
Από αριθμό VET	A partir do n.º VET	Od čísla VET	De la numărul VET	A következő VET számtól:	От номер VET	Od številke VET (vozila)	من رقم VET
Από αριθμό πλαισίου	A partir do n.º do chassis	Od čísla podvozku	De la numărul de şasiu	A következő alvázszámtól:	От шаси номер	Od številke šasije	من رقم الشاسيه
Για αριθμό PR …	Para número PR...	Od čísla PR …	De la numărul PR …	A következő PR számtól:	За номер на PR ...	Za številko PR …	خاص برقم PR
Με βιδωτή συναρμογή	Com parafuso de montagem	S montážním šroubem	Cu şurub de montare	Rögzítőcsavarral	С монтажен болт	S pritrdilnim vijakom	مزود بمسمار التثبيت
Για δεξιοτίμονα οχήματα	Para veículos com volante à direita	Pro vozidla s levostranným řízením	Pentru vehicule cu volan pe dreapta	Jobbkormányos járműhöz	За автомобили с десен волан	Za vozila z volanom na desni strani	للمركبات ذات نظام القيادة الأيمن
Για αριστεροτίμονα οχήματα	Para veículos com volante à esquerda	Pro vozidla s pravostranným řízením	Pentru vehicule cu volan pe stânga	Balkormányos járműhöz	За автомобили с ляв волан	Za vozila z volanom na levi strani	للمركبات ذات نظام القيادة الأيسر
Ρουλεμάν τροχού	Rolamento da roda	Kolové ložisko	Rulment de roată	Kerékcsapágy	Лагер за главина	Kolesni ležaj	محامل العجلات

GLOSSARY

ITEM	EN	FR	DE	ES	IT	NL	PL	RU
ETC	With Electronic Traction Control	Avec système électronique d'antipatinage (ETC)	Mit elektronischer Traktionskontrolle	Con Sistema Electrónico de Control de Tracción	Con Controllo Elettronico della Trazione	Met elektronische tractie controle	Z elektronicznym systemem kontroli trakcji	С электронной противобуксовочной системой
Manufactured	Manufactured	Fabriqué	Hergestellt	Fabricado	Fabbricato	Gefabriceerd	Wyprodukowane	Nзготовлено
Aluminium housing	Aluminium housing	Aluminium boîtier	Aluminium-gehäuse	Carcasa de Aluminio	Alluminio sede	Aluminium behuizing	Aluminium obudowa	Алюминиевый корпус
Bearing	Bearing	Roulement	Lager	Cojinete	Cuscinetto	Lager	Łożysko	Подшипник
Differential brakes	Differential brakes	Freins différentiels	Differential Bremsen	Freno de Diferencial	Differential brake (blocco automatico del differenziale)	Differentieel remmen	Hamulce różnicowe	Дифференциальный тормоз
Double joint rear axle	Double joint rear axle	Essieu arrière double joint	Doppelgelenk Hinterachse	Eje trasero de doble articulación	Assale posteriore a doppio giunto	Dubbel-scharnierende achteras	Tylna oś z podwójnym przegubem	Разрезной задний мост с двумя шарнирами
Double row taper roller bearing	Double row taper roller bearing	Roulement à rouleaux coniques à double rangées	Doppeltes Kegel-Rollenlager	Cojinete de rodillos cónicos de doble fila	Cuscinetto a rulli conici a doppia fila	Kegellager met tweevoudige groef	Podwójny rząd łożysk stożkowych	Двухрядный конический роликовый подшипник
Eng.	Eng.	Mot.	Mot.	Mot.	Mot.	Mot.	Silnik	Англ.
Equipment Variant	Equipment Variant	Variante équipement	Ausstattungs Variante	Variación del equipo	Versione dotazioni	Uitrustingsvariant	Wariant wyposażenia	Вариант оборудования:
For armoured vehicles	For armoured vehicles	Pour véhicules blindés	Für gepanzerte Fahrzeuge	Para vehículos blindados	Per veicoli blindati	Voor gepantserde voertuigen	Dla samochodów opancerzonych	Для бронированных автомобилей
For government vehicles	For government vehicles	Pour véhicules gouvernementaux	Für Regierungs-Fahrzeuge	Para vehículos gubernamentales	Per veicoli governativi	Voor overheids-voertuigen	Dla samochodów rządowych	Для правительствен-ных автомобилей
For shortened wheelbase	For shortened wheelbase	Pour empattement raccourci	Für verkürzte Radstände	Para vehículos con distancia entre ejes acortada	Per interasse accorciato	Voor ingekorte wielbasis	Dla wersji ze skróconym rozstawem osi	Для укороченной колесной базы
For tropical climates	For tropical climates	Pour climats tropicaux	Für tropische Klimabedingungen	Para climas tropicales	Per climi tropicali	Voor tropische klimaten	Dla wersji do klimatu tropikalnego	Для тропического климата
Free-wheeling hub	Free-wheeling hub	Moyeu indépendant	Freilaufnabe	Buje de rueda libre	Mozzo a scatto libero	Vrijloopnaaf	Piasta wolnego koła	Ступица колес с отключаемым при водом
Full-floating axle	Full-floating axle	Essieu entièrement flot-tant	Steckachse	Eje flotante	Asse non portante	Geheel vrijdragende as	Dla osi typu "full-floating"	Ведущий мост с полностью разгру-женными полуосями
HD susp.	HD susp.	Susp. HD	Verstärkte Federung	Suspensión de vehículos pesados	Sosp. HD	HD-oph.	Zawieszenie HD	Подвеска для тяжелых условий эксплуатации
Hub brakes	Hub brakes	Freins moyeu	Nabenbremsen	Frenos de buje	Freni del mozzo	Naafremmen	Hamulce piast	Колесный тормоз
Hybrid engine only	Hybrid engine only	Uniquement moteur hybride	Nur für Hybridantrieb	Solo motor híbrido	Solo motori ibridi	Alleen hybride-motor	Tylko silnik hybrydowy	Только гибрид-ный двигатель

GR	PT	CZ	RO	HU	BG	SL	AR
Με ηλεκτρονικό έλεγχο πρόσφυσης	Com Controlo de Tracção Electrónico	S elektronickou kontrolou trakce	Cu control electronic al tracțiunii	Elektronikus kipörgésgátlóval	С електронен контрол на приплъзването	Z elektronskim nadzorom zdrsa	مزودة بنظام إلكتروني للتحكم بالجر
Κατασκευασμένος	Fabricado	Vyrobeno	producător	Gyártva	Произведен	IZDELAL	العجلات
Περίβλημα αλουμινίου	Alumínio corpo	Hliník těleso	Aluminiu carcasă	Alumínium ház	Алуминий Обшивка	Aluminijasto ohišje	ألومنيوم وقاء
Ρουλεμάν	Rolamento	Ložisko	Rulment	Csapágy	Лагер	Ležaj	محمل
Διαφορικά φρένα	Travões diferenciais	Diferenciální brzdy	Frâne diferențiale	Differenciálmű-fékek	Диференциални спирачки	Diferencialne zavore	مكابح تفاضلية
Οπίσθιος άξονας διπλής εγκάρσιας συνένωσης	Eixo traseiro de junta dupla	Dvojitá kloubová zadní náprava	Punte spate cu articulație dublă	Kétcsuklós hátsó tengely	Задна ос с двойно съединение	Dvozgibna zadnja prema	محور خلفي بمفصل مزدوج
Κωνικά ρουλεμάν διπλής σειράς	Rolamento cónico de rolos duplo	Dvouřadé kuželíkové ložisko	Rulment cu două rânduri de role conice	Kétsoros kúpgörgős csapágy	Двуредов скосен ролков лагер	Dvoredni stožčasti ležaj	محمل ذو أسطوانات مستدق مزدوج الصف
Μηχ.	Mot.	Tech.	Motor	Mot.	Инж.	Motor	محرك
Εξοπλισμός	Variante de Equipamento	Provedení zařízení	Variantă de echipare	Felszereltség	Вариант на оборудването	Različica opreme	مغير المعدة
Για ενισχυμένα οχήματα	Para veículos blindados	Pro obrněná vozidla	Pentru vehicule blindate	Páncélozott járművekhez	За бронирани автомобили	Za oklepna vozila	للمركبات المدرعة
Για κυβερνητικά οχήματα	Para veículos governamentais	Pro vládní vozidla	Pentru vehicule guvernamentale	Kormányzati gépkocsikhoz	За правителствени автомобили	Za vladna vozila	للمركبات الحكومية
Για κοντά μεταξόνια	Para distância reduzida entre eixos	Pro zkrácený rozvor	Pentru ampatament scurt	Rövid tengelytávhoz	За скъсена колесна база	Za skrajšane medosne razdalje	لقاعدة العجلة القصيرة
Για τροπικά κλίματα	Para climas tropicais	Pro tropická klimata	Pentru climate tropicale	Trópusi klímához	За тропически климат	Za tropska podnebja	للأجواء المناخية الاستوائية
πλήμνη ελεύθερης περιστροφής τροχού	Cubo de roda livre	Volnoběžný náboj kola	butuc de roată liberă	Kikapcsolható hajtású kerékagy	свободно въртяща се главина	Prostotekoče pesto	محور حر الدوران
Πλήρως κινούμενος άξονας	Eixo totalmente flutuante	Plně plovoucí náprava	Punte oscilantă	Full-Floating (mindkét végén bordázott) tengely	Изцяло освободена ос	Prosto vrtljiva prema	محور عائم تمامًا
Ανάρτηση HD	Suspensão pesada	HD zav.	Susp. HD	HD felf.	Окачв. HD	Vzdržljivo vzmetenje	تعليق هيدروليكي
Φρένα πλήμνης	Travões no cubo	Brzdy v náboji kol	Frâne cu butuc	Kerékagyfékek	Спирачки на главината	Zavore na pestu	مكابح محور
Μόνο υβριδικός κινητήρας	Apenas motor híbrido	Pouze hybridní motor	Numai motor hibrid	Csak hibrid motorral	Само за хибриден двигател	Samo hibridni motorji	للمحرك الهجين فقط

GLOSSARY

ITEM	EN	FR	DE	ES	IT	NL	PL	RU
Independent suspension, Multilink	Independent suspension, Multilink	Suspension indé-pendante, multi-bras	Unabhänginge Radaufhängung, Mehrlenkerachse	Suspensión Multibrazo Independiente	Sospensioni indipendenti, Multi-Link	Onafhankelijke ophanging, Multi-Link	Zawieszenie niezależne, wielowahaczowe - Multilink	Независимая подвеска, много-рычажная
Light trucks	Light trucks	Camions légers	Leichte NKW	Camiones ligeros	Autocarri leggeri	Lichte vrachtwagens	Małe ciężarówki	Легкие грузовые автомобили
Manual steering	Manual steering	Direction manuelle	Ohne Servolenkung	Dirección manual	Sterzo manuale	Zonder stuurbekrachtiging	Układ kierowniczy bez wspomagania	Рулевое управление без усилителя
Multilink axle	Multilink axle	Essieu multi-bras	Mehrlenkerachse	Eje multibrazo	Assale Multilink	Multilink-as	Oś wielowahaczowa	Многорычажная ось
Only for diesel	Only for diesel	Diesel uniquement	Nur für Versionen mit Diesel-Motor	Solo para vehículos diésel	Solo per diesel	Alleen voor diesel	Tylko dla diesla	Только для трансп.средств с дизельным двигателем
Only for gasoline	Only for gasoline	Essence uniquement	Nur für Versionen mit Otto-Motor	Solo para vehículos gasolina	Solo per benzina	Alleen voor benzine	Tylko dla silnika benzynowego	Только для трансп. средств с бензиновым двигателем
Passenger cars	Passenger cars	Voitures de tourisme	PKWs	Turismos	Vetture	Personenauto's	Samochody osobowe	Пассажирские автомобили
Pitch circle	Pitch circle	Cercle primitif	Lochkreis	Circunferencia de sujección	Circonferenza ori-ginaria	Steekcirkel (tandwiel)	Wycinek koła	Расчетная окружность
Reinforced suspension	Reinforced suspension	Suspension renforcée	Verstärkte Federung	Suspensión reforzada	Sospensione rinforzata	Verzwaarde ophanging	Zawieszenie wzmocnione	Усиленная подвеска
Rigid axle	Rigid axle	Essieu rigide	Starrachse	Eje rígido	Assale rigido	Starre as	Oś sztywna	Неразрезной мост
Semi-floating axle	Semi-floating axle	Essieu semi-flottant	Halbachse als Steckachse ausgeführt	Eje semiflotante	Asse semiportante	Halfvrijdragende as	Oś typu "semi-floating"	Полураз-груженный
Single row taper roller bearing	Single row taper roller bearing	Roulement à rouleaux coniques à simple rangée	Einfaches Kegel-Rollenlager	Cojinete de rodillos cónicos de fila única	Cuscinetto a rulli conici a fila singola	Enkelvoudig kegellager	Pojedynczy rząd łożysk stożkowych	Однорядный конический роликовый подшипник
Steel housing	Steel housing	Boîtier en acier	Stahlgehäuse	Carcasa de acero	Sede in acciaio	Stalen behuizing	Obudowa stalowa	Стальной корпус
Track width rear	Track width rear	Largeur de voie arrière	Spurbreite hinten	Ancho del eje trasero	Larghezza della carreggiata posteriore	Spoorbreedte achter	Szerokość tylnego śladu	Ширина колеи сзади
Wheel	Wheel	Roue	Rad	Rueda	Ruota	Wiel	Koło	Колесо
With EDC	With EDC	Avec EDC	Mit EDC	Con EDC	Con EDC (controllo elettronico degli ammortizzatori)	Met EDC	Z EDC	С электронным контролем демп-фирования (EDC)
With extended load	With extended load	Avec charge étendue	Mit erhöhter Tragfähigkeit	Con carga extra	Per carichi maggiorati	Met uitgebreide lading	Ze zwiększonym obciążeniem	с длительной нагрузкой
With integrated Brake Disc	With integrated Brake Disc	Avec disque intégré	Mit integrierter Scheibenbremse	Con el disco de freno integrado	Integrato nel disco	Met geïntegreerde remschijf	Ze zintegrowaną tarczą hamulcową	со встроенным тормозным диском

GR	PT	CZ	RO	HU	BG	SL	AR
Ανεξάρτητη ανάρτηση, Πολλαπλοί σύνδεσμοι	Suspensão independente, multilink	Nezávislé zavěšení typu Multilink	Suspensie independentă, multi-link	Több lengőkaros, független felfüggesztés	Независимо окачване, многолостово	Neodvisno obešenje, Multilink	تعليق مستقل، متعدد الوصلات
Ελαφρά φορτηγά	Furgões ligeiros	Lehká nákladní vozidla	Camioane uşoare	Kisáruszállítók	Лекотоварни камиони	Poltovornjaki	شاحنات خفيفة
Χειροκίνητο σύστημα διεύθυνσης	Direcção manual	Manuální řízení	Direcție manuală	Rásegítés nélküli kormányrendszer	Ръчно управление	Ročno krmiljenje	قيادة يدوية
Άξονας πολλαπλών συνδέσμων	Eixo multilink	Náprava s víceprvkovým zavěšením (Multilink)	Punte multi-link	Több lengőkaros csatolású tengely	Многолостова полуоска	Večvodilna prema	محور متعدد الوصلات
Μόνο για πετρελαιοκινητήρες	Apenas para diesel	Pouze pro diesel	Doar pentru motorină	Csak gázolajjal működik	Само за дизелов двигател	Samo za dizelske motorje	لمحركات الديزيل فقط
Μόνο για βενζινοκινητήρες	Apenas para gasolina	Pouze pro benzín	Doar pentru benzină	Csak benzinnel működik	Само за бензинов двигател	Samo za bencinske motorje	لمحركات البنزين فقط
Επιβατικά αυτοκίνητα	Veículos de passageiros	Osobní vozidla	Autoturisme	Személygépkocsik	Леки автомобили	Osebna vozila	سيارات الركاب
Κύκλος βήματος	Círculo primitivo	Roztečná kružnice	Cerc de înclinare	Osztókör	Окръжност на центровете на отверстия	Delilni krog	دائرة الخطوة
Ενισχυμένη ανάρτηση	Suspensão reforçada	Vyztužené zavěšení	Suspensie întărită	Megerősített felfüggesztés	Подсилено окачване	Ojačeno vzmetenje	تعليق مُقوّى
Άκαμπτος άξονας	Eixo rígido	Tuhá náprava	Punte rigidă	Merev tengely	Твърда полуоска	Toga prema	محور ثابت
Ημί-κινούμενος άξονας	Eixo semi-flutuante	Poloplovoucí náprava	Punte semi-oscilantă	Semi-Floating (egyik végén bordázott) tengely	Полуосвободена полуоска	Napol prosto uležajena polgred	محور نصف عائم
Κωνικά ρουλεμάν μονής σειράς	Rolamento cónico de rolos simples	Jednořadé kuželíkové ložisko	Rulment cu un singur rând de role conice	Egysoros kúpgörgős csapágy	Едноредов скосен ролков лагер	Enoredni stožčasti ležaj	محمل ذو أسطوانات مستدق أحادي الصف
Μεταλλικό περίβλημα	Corpo em aço	Ocelové pouzdro	Carcasă din oțel	Acélház	Стоманена обшивка	Jekleno ohišje	وقاء فولاذي
Πλάτος οπίσθιου μετατροχίου	Largura da via traseira	Rozchod kol vzadu	Ecartament spate	Hátsó nyomtáv	Широчина на дирята отзад	Širina koloteka zadaj	عرض مسار العجلات
Τροχός	Roda	Kolo	Roată	Kerék	Колело	Kolo	الخلفية
Με ηλεκτρονικό σύστημα ελέγχου (EDC)	Com EDC	S EDC	Cu EDC	EDC Rendszerel	С EDC	Z menjalnikom z dvojno sklopko EDC	بنظام إلكتروني للتحكم في الخانق (EDC)
Με εκτεταμένο φορτίο	Com carga adicional	Pro vyšší zatížení	Cu sarcina marita	Megnövelt terhelhetőséggel	С увеличен товар	S povečano obremenitvijo	مع تحميل ممتد
Με ενιαίο δίσκο φρένων	Com disco de travão integrado	S integrovaným brzdovým kotoučem	Cu disc de frana integrat	Integrált féktárcsával	С интегриран спирачен диск	Z integriranim zavornim kolutom	مع قرص الفرامل مدمج

TERMS OF BUSINESS

▶ EN - Terms of Business

Orders are accepted subject to our Terms and Conditions which are available from Federal-Mogul Aftermarket and Federal-Mogul Corporation. Part numbers, vehicle model and engine details change from time to time and although the information contained in the catalogues was, to the best of our knowledge, accurate at the time of compilation and publication, Federal-Mogul cannot accept responsibility for any inaccuracies and subsequent changes to the information provided.

▶ FR - Clauses commerciales

Les commandes sont soumises à nos conditions générales de ventes, lesquelles sont disponibles auprès de Federal-Mogul Aftermarket France et Federal-Mogul Corporation. Les références des pièces ou les renseignements concernant les modèles ou les moteurs sont susceptibles de subir des modifications de temps en temps. Et bien que toutes les informations figurant dans ce catalogue proviennent de sources authentiques, et étaient exactes, à notre connaissance, au moment de la publication, Federal-Mogul n'acceptera aucune responsabilité dans le cas où ces indications se révéleraient inexactes.

▶ DE - Geschäftsbedingungen

Aufträge werden auf der Grundlage der allgemeinen Geschäftsbedingungen entgegengenommen. Diese erhalten Sie von: Federal-Mogul Aftermarket und der Federal-Mogul Corporation. Teilenummern, Angaben zum Fahrzeugmodell und Motor ändern sich laufend. Die Informationen in diesem Katalog waren zum Zeitpunkt der Zusammenstellung und Veröffentlichung korrekt. Federal-Mogul ist jedoch nicht verantwortlich für fehlerhafte Angaben und die daraus resultierenden veränderten Informationen.

▶ ES - Condiciones Comerciales

Todos los pedidos están sujetos a las condiciones generales de venta disponibles de Federal-Mogul Aftermarket y Federal-Mogul Corporation. Las referencias, modelo de vehículo y detalles del motor están sujetos a cambios y modificaciones sin previo aviso del constructor, aunque la información contenida en este catálogo es, según nuestro leal saber y entender correcta a la hora de su recopilación y publicación, Federal-Mogul no acepta responsabilidad alguna por cualquier inexactitud o cambios subsiguientes a la información provista.

▶ I - Condizioni generali di vendita

Ogni ordine è soggetto alle condizioni generali di vendita di Federal-Mogul Aftermarket e Federal-Mogul Corporation. Sebbene le informazioni contenute in questo catalogo siano state verificate, Federal-Mogul non si assume responsabilità per eventuali errori o modifiche successive relativamente alle informazioni fornite.

▶ NL - Handelsvoorwaarden

Bestellingen worden aanvaard volgens onze standaard verkoopvoorwaarden die kunnen worden verkregen bij Federal-Mogul Aftermarket en Federal-Mogul Corporation. Artikelnummers, voertuigmodellen en motorgegevens wijzigen soms. De informatie in de catalogi werd naar best vermogen opgenomen en was accuraat op het ogenblik van de samenstelling en publicatie van deze catalogi. Federal-Mogul kan niet verantwoordelijk worden gesteld voor eventuele onnauwkeurigheden van en latere wijzigingen aan de verstrekte informatie.

▶ PL - Warunki Sprzedaży

Zamówienia są przyjmowane zgodnie ze standardowymi Warunkami Sprzedaży oferowanymi przez Federal-Mogul Aftermarket i Federal-Mogul Corporation. Dane dotyczące modeli pojazdów i silników oraz numery części mogą się zmieniać w czasie i choć informacje zawarte w naszych katalogach zostały umieszczone zgodnie z naszą najlepszą wiedzą i dokładnością w czasie ich zbierania i publikowania, to Federal-Mogul nie może zaakceptować jakiejkolwiek odpowiedzialności wynikającej z nieścisłości czy późniejszych zmian w stosunku do dostarczonych informacji.

▶ RU - УСЛОВИЯ СЛОВИЯСОТРУДНИЧЕСТВА

Заказы на продукцию принимаются согласно стандартным условиям продаж Federal-Mogul Aftermarket и корпорации Federal-Mogul. Время от времени наименования деталей, рекомендации и данные по моделям автомобилей и двигателям могут менятся и несмотря на то, что информация содержащаяся в каталогах на момент публикации была наиболее правильной, Federal-Mogul не может нести ответственности за любые погрешности и последующие изменения предоставленной информации.

www.moogparts.eu/terms&conditions-3-year-guarantee.html

▶ GR - Οροι συνεργασιας

Οι παραγγελίες γίνονται αποδεκτές σύμφωνα με τους Επίσημους Όρους Πώλησης οι οποίοι είναι διαθέσιμοι από την Federal-Mogul Aftermarket και την Federal-Mogul Corporation. Οι κωδικοί αριθμοί των εξαρτημάτων, τα μοντέλα των οχημάτων και τα στοιχεία των κινητήρων αλλάζουν κατά διαστήματα. Αν και οι πληροφορίες οι οποίες περιλαμβάνονται στους καταλόγους, ήταν σύμφωνα με τις γνώσεις μας κατά το καλύτερο δυνατό ακριβείς κατά την διάρκεια της σύνταξης και της δημοσίευσης, η Federal-Mogul δεν μπορεί να δεχτεί την ευθύνη για οποιεσδήποτε ανακρίβειες και επόμενες αλλαγές στις παρεχόμενες πληροφορίες.

▶ PT - Termos de negócio

As encomendas são aceites sujeitas às Condições de Venda padrão que se encontram disponíveis no Aftermarket da Federal-Mogul e na Federal-Mogul Corporation. As referências de peças, modelos de veículos e detalhes do motor são alterados periodicamente e apesar das informações contidas nos catálogos serem, de acordo com o nosso melhor conhecimento, precisas na altura da compilação e publicação, a Federal-Mogul não aceita responsabilidade por quaisquer imprecisões e subsequentes alterações às informações fornecidas.

▶ CZ - Obchodní podmínky

Objednávky jsou přijímány v souladu se standardními Prodejními podmínkami, které jsou dostupné u společností Federal-Mogul Aftermarket a Federal-Mogul Corporation. Čísla dílů, informace o modelech vozidel a motorech se čas od času mění, a přestože byly informace obsažené v katalozích podle našich nejlepších znalostí v okamžiku sestavení a uveřejnění přesné, společnost Federal-Mogul nepřijímá odpovědnost za žádné nepřesnosti a následné změny poskytnutých informací.

▶ RO - Conditii de afaceri

Comenzile sunt acceptate sub rezerva Condițiilor de vânzare standard, puse la dispoziție de Federal-Mogul Aftermarket și Federal-Mogul Corporation. Codurile pieselor, modelele de vehicule și detaliile motoarelor se modifică periodic și, deși informațiile conținute în cataloage erau, după cunoștințele noastre, exacte în momentul colectării și publicării, Federal-Mogul nu poate accepta responsabilitatea pentru nicio inadvertență și nici pentru modificările ulterioare aduse informațiilor furnizate.

▶ HU - Üzleti feltételek

AA rendeléseket a Federal-Mogul Aftermarket és Federal-Mogul Corporation normál értékesítési feltételei alapján fogadjuk. A cikkszámok, a járművek típusjelzései és a motorok adatai időről időre változnak. Éppen ezért, habár a katalógusainkban foglalt információk a legjobb tudomásunk szerint a kiadás napján helyesek voltak, a Federal-Mogul nem vállalhat felelősséget a pontatlanságokért és az ezekből eredő változásokért.

▶ BG - Условия на работа

Поръчки се приемат при спазване на Стандартните условия на продажба, които са на разположение във "Federal-Mogul Aftermarket" и "Federal-Mogul Corporation". Номерата на частите, моделът на превозното средство и данните за двигателя се променят през определено време и въпреки, че информацията, съдържаща се в каталозите е била, доколкото ни е известно, вярна по време на изготвянето и публикуването, "Federal-Mogul" не носи отговорност за неточности и последващите промени в предоставената информация.

▶ SL - Poslovni pogoji

Naročila so sprejeta v skladu s standardnimi prodajnimi pogoji, ki so na voljo pri podjetju Federal-Mogul Aftermarket in korporaciji Federal-Mogul Corporation. Številke delov, model vozila in podrobnosti o motorju se od časa do časa spremenijo. Čeprav so bili podatki v katalogu, po naši najboljši vednosti, v času sestavljanja in objave točni, podjetje Federal-Mogul ne more prevzeti odgovornosti za kakršnekoli netočnosti in naknadne spremembe priskrbljenih podatkov.

▶ AR - شروط العمل التجاري

تخضع الطلبات التي تمت الموافقة عليها لشروط البيع القياسية التي وضعتها شركة Federal-Mogul Aftermarket وشركة Federal-Mogul Corporation.
يتم تغيير أرقام القطع وطرازات السيارات وتفاصيل المحرك من وقت لآخر، وعلى الرغم من أن هذه المعلومات الواردة بالكتالوجات دقيقة على حد علمنا أثناء جمعها ونشرها، فإن شركة Federal-Mogul لا تتحمل مسؤولية أي أخطاء وتغييرات لاحقة تطرأ على المعلومات الواردة بها.

NOTES

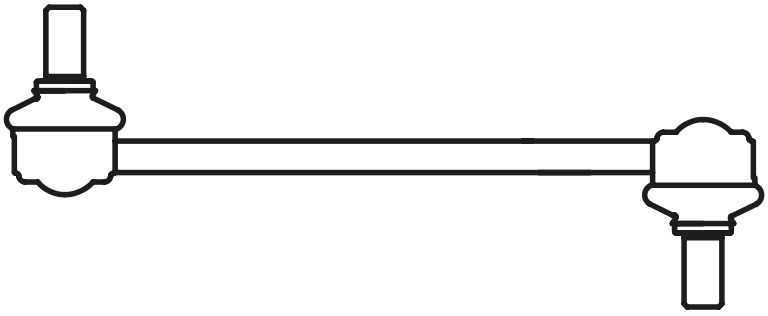

Steering & Suspension

ALFA ROMEO	1
AUDI	21
BMW	83
CHEVROLET	145
CHRYSLER	167
CITROËN	177
DACIA	243
DAEWOO	259
DAIHATSU	281
FIAT	289
FORD	355
HONDA	421
HYUNDAI	453
ISUZU	509
IVECO	511
JAGUAR	513
JEEP	517
KIA	527
LADA	571
LANCIA	581
LAND ROVER	601
MAZDA	625
MERCEDES-BENZ	667
MG	749
MINI	757
MITSUBISHI	765
NISSAN	805
OPEL	857
PEUGEOT	921
PORSCHE	985
PROTON	989
RENAULT	991
ROVER	1057
SAAB	1073
SEAT	1081
SKODA	1133
SMART	1167
SSANGYONG	1173
SUBARU	1175
SUZUKI	1189
TOYOTA	1221
VAUXHALL	1291
VOLVO	1355
VW	1393

OZTO c _ [S_

9BC 0GA81	8E7GB 89789	9BD 0GA81	9; 7GB 89789

AL-SB-9686	AL-SB-9688
⊂ ✓ 1.3, 1.6, 1.7, 2.0(AR67299)	⊃ ✓ 1.3, 1.6, 1.7, 2.0(AR67299)
FI-SB-9694	**FI-SB-9693**
⊂ ✓ 1.4, 1.6TS, 1.8TS, 1.9JTD,TDS, 2.0(AR32301, 67204)	⊃ ✓ 1.4, 1.6TS, 1.8TS, 1.9JTD,TDS, 2.0(AR32301, 67204)

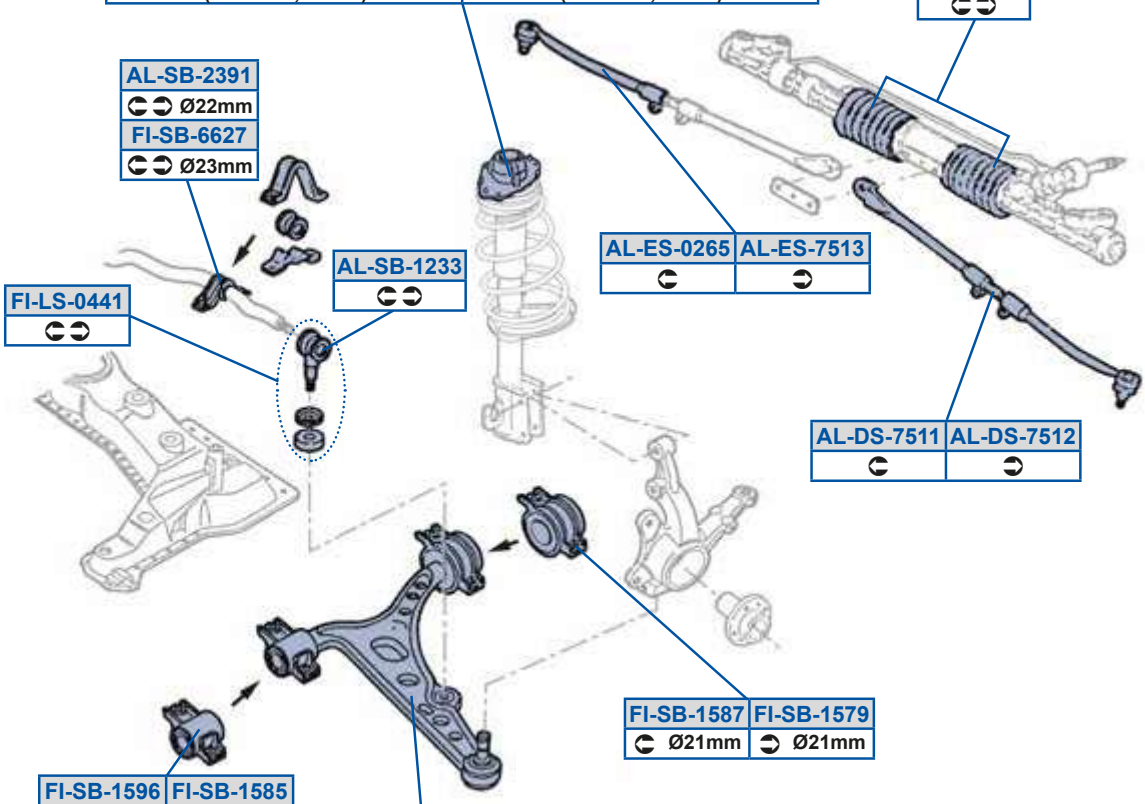

AL-WP-7527	AL-WP-7526
⊂ Cast Iron	⊃ Cast Iron
AL-TC-8867	**AL-TC-8868**
⊂ Forged Steel	⊃ Forged Steel

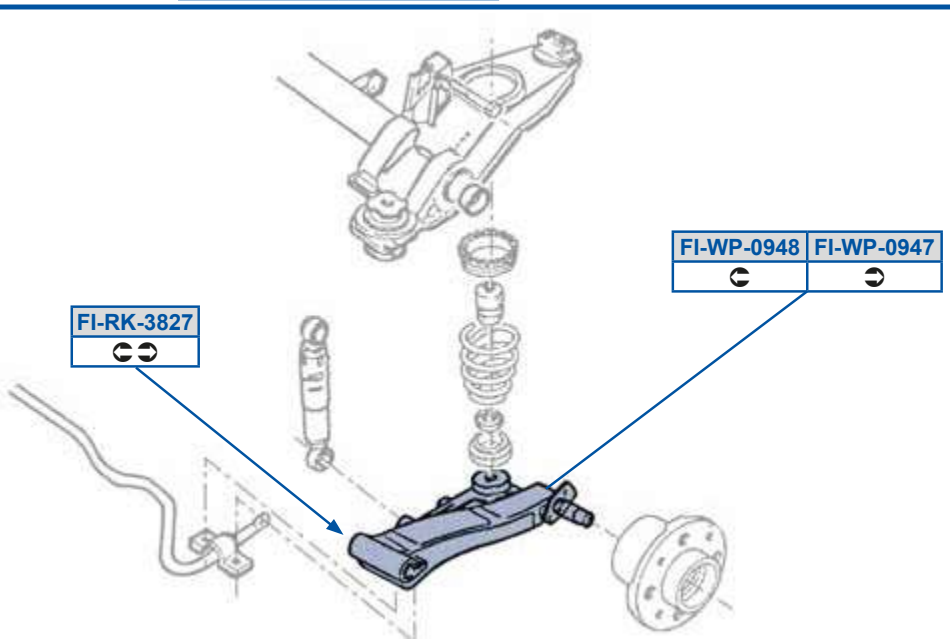

OZTO c _ [S_

MOOG

OZ5Rd5EC99
D7D7FGF7

OZ5eQ5FFDE
BDB9AF9B3BDBEBCCD

TV5dP59CFE
ED787DC

OZ5Rd5EC9>
D7E879AE

OZ5eQ5FFDF
BDB9AF9C3BDBEBCCD

TV5dP59CGD
ED787DB

OZ5Sd58>DC
D7D7FGEG3EDEFE8F

OZ5h a5EC>D
BDB9AF9C3BDBEBCCD

TV5dP5DD>E
D7F7FCCE3ED78DBD

OZ5Sd5EC9A
D7D7FGF73GGBEBAF

OZ5h a5EC>E
BDB9AF9B3BDBEBCCD

TV5dP5GDGA
BDB8B8FA3D7F7DAGF

OZ5dP59>AA
D7F7DB7F3ED78DB9

TV5Zd58BB9
D7CE7D9E3D7F7ECFA

TV5dP5GDGB
BDB8B8FB3D7F7GECA

OZ5dP5>AG9
D7F7FCCE

TV5cY5AF>E
BDBCGE9A

TV5h a58GBE
BDB7G7GD3BDBCGE97

OZ5dP5GDFD
D7CE7EA93D7F7DAGF

TV5dP59CEG
ED787DF

TV5h a58GBF
BDB7G7GC3BDBCGE8G

OZ5dP5GDFF
D7CE7EA8

TV5dP59CFC
ED787DB

Y9C8988
AD7977ED3GGBBBCB

AL-SB-9686	AL-SB-9688
✓ 1.3, 1.6, 1.7, 2.0(AR67299)	✓ 1.3, 1.6, 1.7, 2.0(AR67299)
FI-SB-9694	**FI-SB-9693**
✓ 1.4, 1.6TS, 1.8TS, 1.9JTD,TDS, 2.0(AR32301, 67204)	✓ 1.4, 1.6TS, 1.8TS, 1.9JTD,TDS, 2.0(AR32301, 67204)

FI-ES-4675	FI-ES-4676
M12x1.5 ✗ 1.9JTD	M12x1.5 ✗ 1.9JTD
FI-ES-2512	
M14x1.5 ✗ 1.9JTD	
FI-ES-3525	
M14x1.5 ✓ 1.9JTD	

AL-SB-2391
Ø22mm
FI-SB-6627
Ø23mm

K150137
L=98
K150167
L=214

AL-SB-1233

FI-LS-0441

AL-AX-1681
M12x1.5
AL-AX-1699
M14x1.5

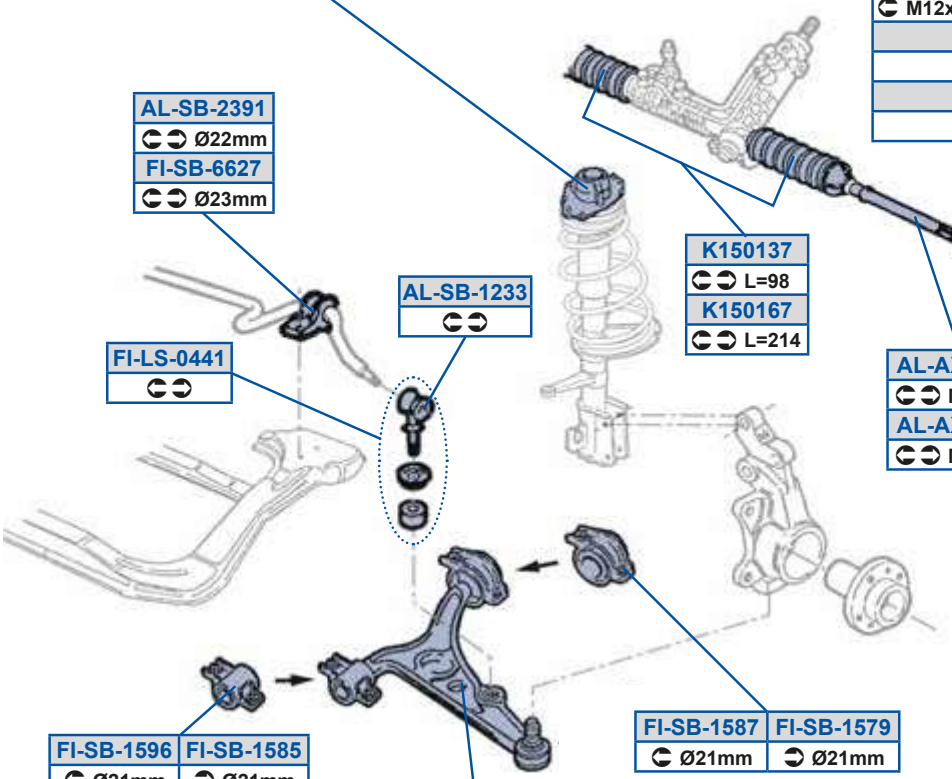

FI-SB-1596	FI-SB-1585
Ø21mm	Ø21mm

FI-SB-1587	FI-SB-1579
Ø21mm	Ø21mm

AL-WP-7527	AL-WP-7526
Cast Iron	Cast Iron
AL-TC-8867	**AL-TC-8868**
Forged Steel	Forged Steel

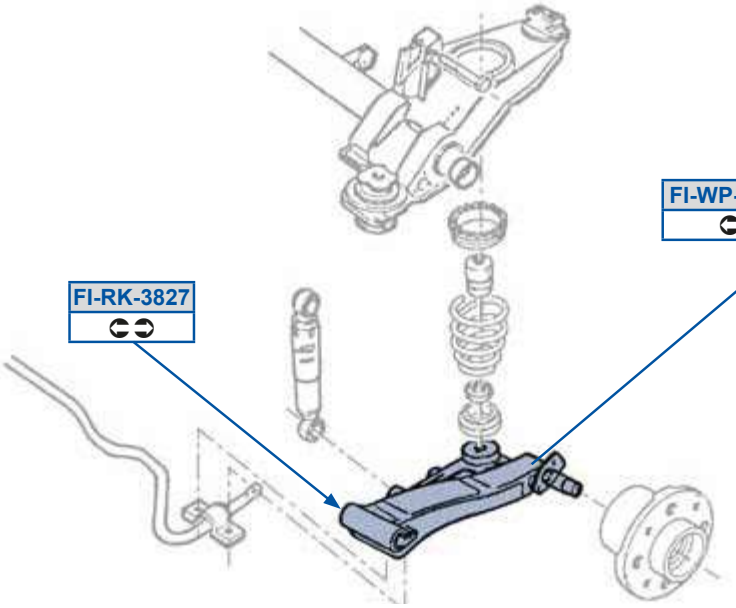

FI-WP-0948	FI-WP-0947

FI-RK-3827

OZ5Oi 59DF9
G7C7BC93GGBBBC9

OZ5Oi 59DGG
GGBEE8F

OZ5dP59>AA
D7F7DB7F3ED78DB9

OZ5dP5>AG9
D7F7FCCE

OZ5dP5GDFD
D7CE7EA93D7F7DAGF

OZ5dP5GDFF
D7CE7EA8

OZ5eQ5FFDE
BDB9AF9B3BDBEBCCD

OZ5eQ5FFDF
BDB9AF9C3BDBEBCCD

OZ5h a5EC>D
BDB9AF9C3BDBEBCCD

OZ5h a5EC>E
BDB9AF9B3BDBEBCCD

TW5Sd5>C9>
GFFBC7A73GGBEE8G

TW5Sd5AC>C
GGBEE973GGBEG9D

TW5Sd5BDEC
D7CDCE7D3ECG898D

TW5Sd5BDED
D7CDCE7C3ECG898C

TW5Zd58BB9
D7CE7D9E3D7F7ECFA

TW5c Y5AF>E
BDBCGE9A

TW5dP59CEG
ED787DF

TW5dP59CFC
ED787DB

TW5dP59CFE
ED787DC

TW5dP59CGD
ED787DB

TW5dP5DD>E
D7F7FCCE3ED78DBD

TW5dP5GDGA
BDB8B8FA3D7F7DAGF

TW5dP5GDGB
BDB8B8FB3D7F7GECA

TW5h a58GBE
BDB7G7GD3BDBCGE97

TW5h a58GBF
BDB7G7GC3BDBCGE8G

Y9C89AE
AD7977DD

Y9C89DE
GGC7DC7

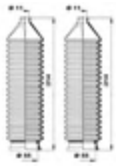

OZTO c_ [S_

9BE 0GAE1	99788	8A798	9BE 0GAEr 1	8F78F 8A798
Ue 0GAE1	9978A	8G798		

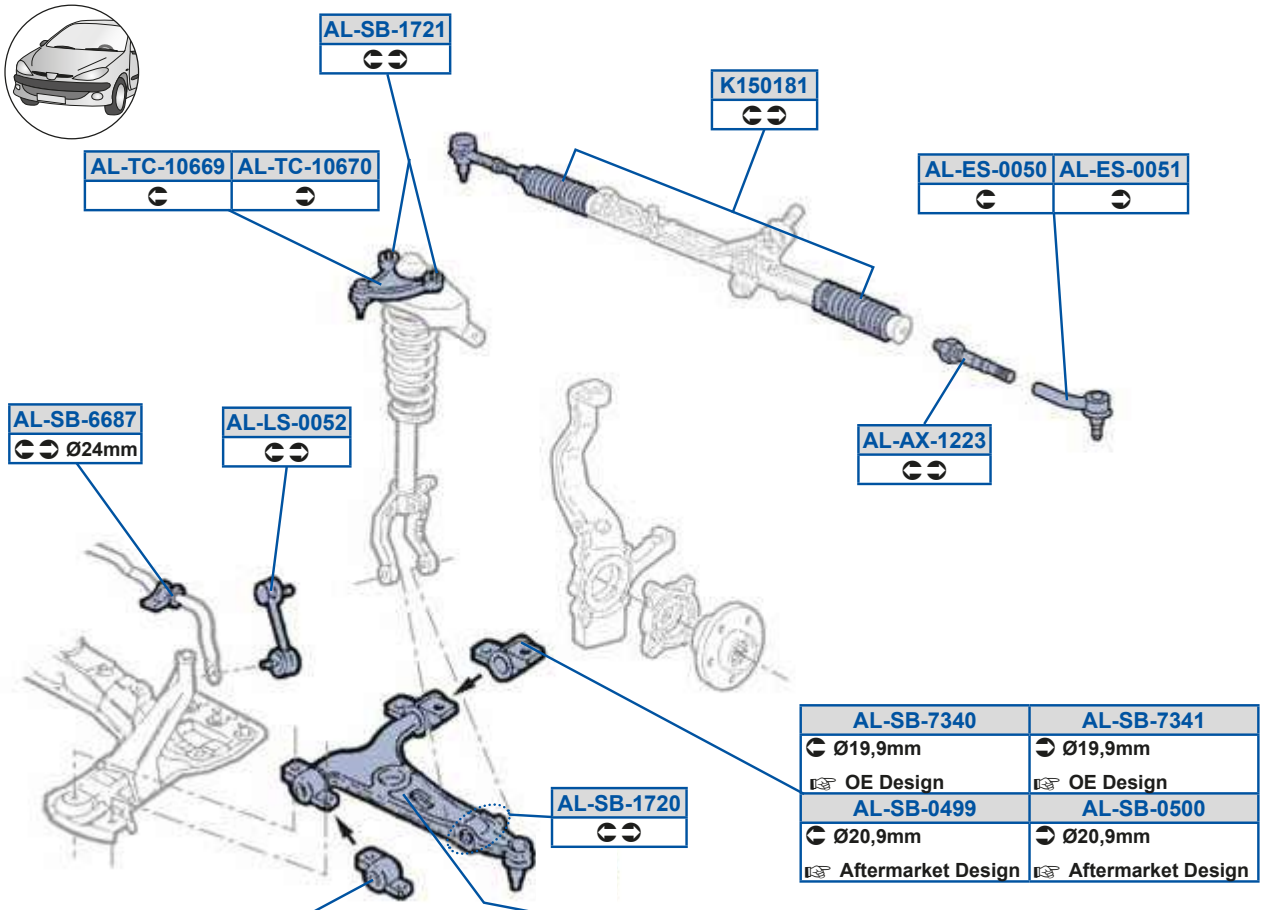

AL-SB-7340	AL-SB-7341
Ø19,9mm	Ø19,9mm
OE Design	OE Design
AL-SB-0499	AL-SB-0500
Ø20,9mm	Ø20,9mm
Aftermarket Design	Aftermarket Design

AL-SB-7338	AL-SB-7339
Ø18,9mm	Ø18,9mm
OE Design	OE Design
AL-SB-0501	AL-SB-0502
Ø20,9mm	Ø20,9mm
Aftermarket Design	Aftermarket Design

AL-TC-0056	AL-TC-0057
OE Design	OE Design
AL-TC-8079	AL-TC-8080
Aftermarket Design	Aftermarket Design

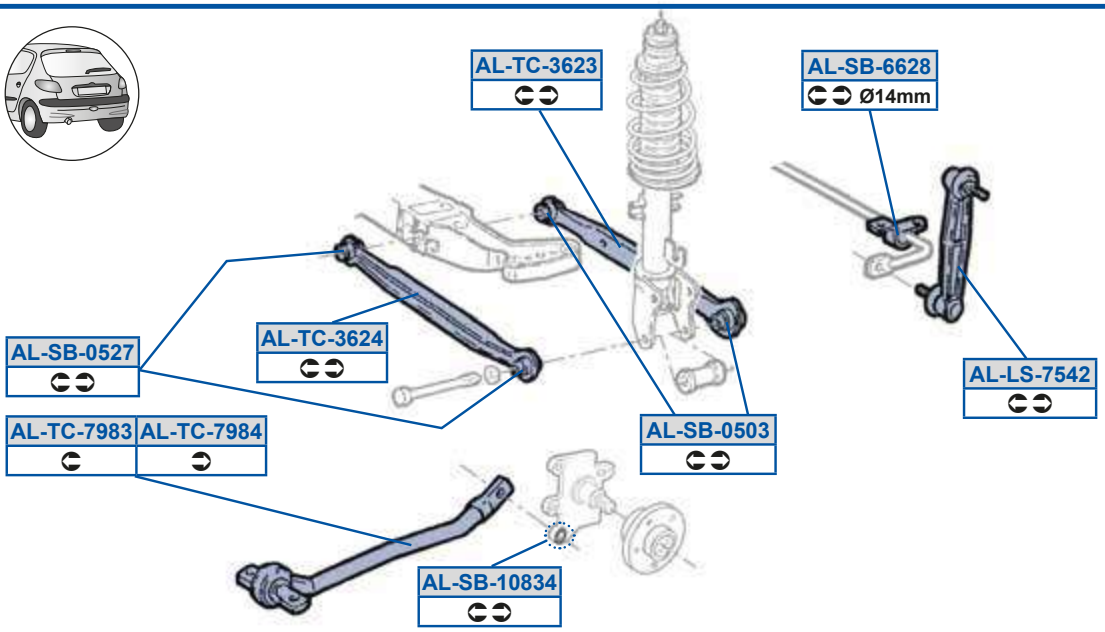

MOOG

OZ5Oi 59>>A
GGBEG9A

OZ5dP58C8>
D7DC9BDD

OZ5dP5EAAF
D7D97CDC

OZ5eQ5AD>A
C8EBGE8A3D7DC98DE

OZ5Sd588C8
AD79CEBF3GGBEG8G

OZ5dP58C8A
AC7DD /40

OZ5dP5EAAG
D7D97CDD

OZ5eQ5AD>B
BDF79DF93D7D9GG7A

OZ5Sd588C9
AD79CEBG3GGBEG97

OZ5dP58C>E
AC7DE /40

OZ5dP5EAB8
D7DC9BDD

OZ5eQ5EGFA
C8EEEE8E3D7D99D9A

OZ5Zd588C>
BDFB8BGF3BDFBAAFG

OZ5dP598FAB
BDB79F9C3D7DF9DAD

OZ5dP5EAB9
D7DFDFG8 /40BD7DFDFG9 /40

OZ5eQ5EGFB
C8EEEE8F3D7D99D9B

OZ5Zd5ECB>
D7D8ACEC3D7DGG798

OZ5dP59E>8
C7C7GAAGo8

OZ5eQ588CD
C7C7GAB73D7DB9BDC

OZ5eQ5F8EG
C7C7GAB73D7DB9BDC

OZ5dP58BGG
D7D97CDD

OZ5dP59E>9
D7DCE9BCD /40

OZ5eQ588CE
C7C7GAAG3D7DC9BDD

OZ5eQ5F8F8
C7C7GAAG3D7DC9BDD

OZ5dP58C88
D7D97CDC

OZ5dP5DD>F
BDCCC8FA

OZ5eQ598DDG
C8EEDA9E3C8FAB7GA

Y9C89F9
GGBEG98

OZ5dP58C89
D7DC9BDC

OZ5dP5DDFE
C8ECB8GF

OZ5eQ598DE8
C8EEDA9D3C8FAB7GB

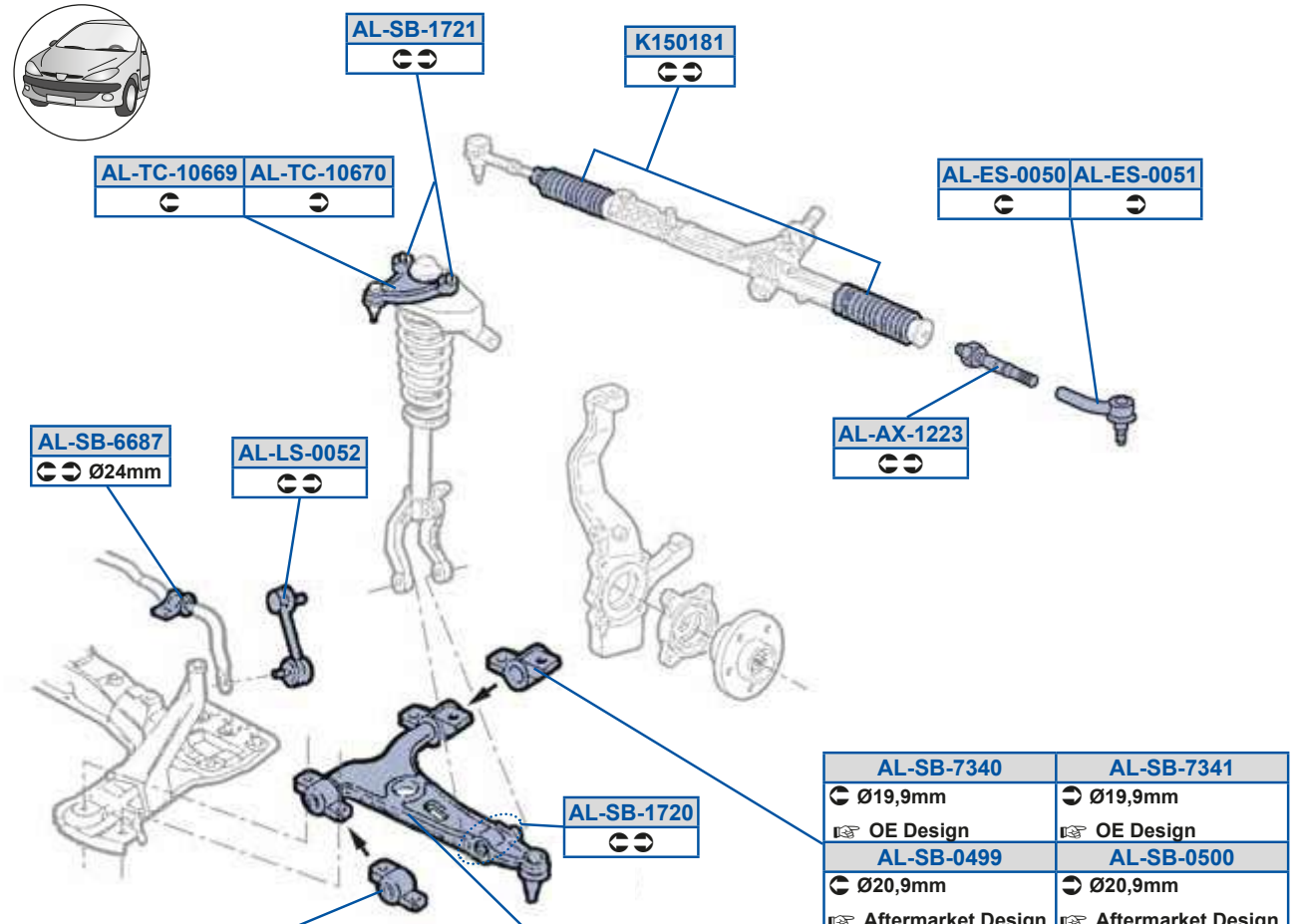
AL-SB-1721
K150181
AL-TC-10669
AL-TC-10670
AL-ES-0050
AL-ES-0051
AL-AX-1223
AL-SB-6687
Ø24mm
AL-LS-0052
AL-SB-7340
Ø19,9mm
OE Design
AL-SB-7341
Ø19,9mm
OE Design
AL-SB-0499
Ø20,9mm
Aftermarket Design
AL-SB-0500
Ø20,9mm
Aftermarket Design
AL-SB-1720
AL-SB-7338
Ø18,9mm
OE Design
AL-SB-7339
Ø18,9mm
OE Design
AL-SB-0501
Ø20,9mm
Aftermarket Design
AL-SB-0502
Ø20,9mm
Aftermarket Design
AL-TC-0056
OE Design
AL-TC-0057
OE Design
AL-TC-8079
Aftermarket Design
AL-TC-8080
Aftermarket Design

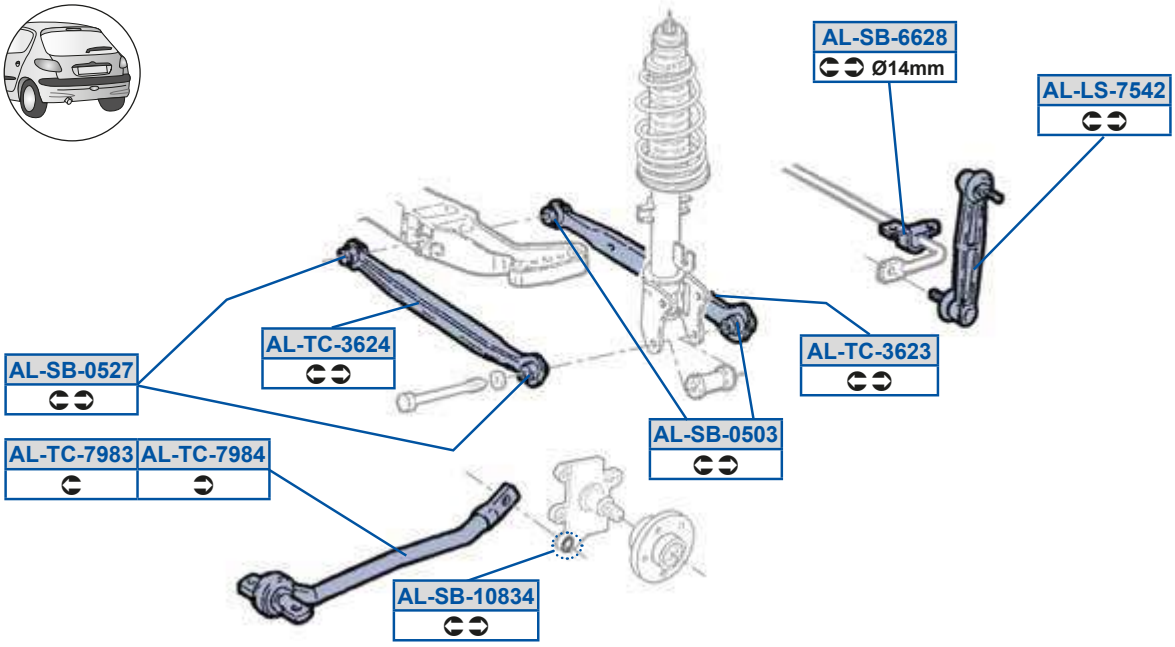
AL-SB-6628
Ø14mm
AL-LS-7542
AL-TC-3624
AL-TC-3623
AL-SB-0527
AL-SB-0503
AL-TC-7983
AL-TC-7984
AL-SB-10834

OZ5Oi 59>>A
GGBEG9A

OZ5dP58C8>
D7DC9BDD

OZ5dP5EAAF
D7D97CDC

OZ5eQ5AD>A
C8EBGE8A3D7DC98DE

OZ5Sd588C8
AD79CEBF3GGBEG8G

OZ5dP58C8A
AC7DD /40

OZ5dP5EAAG
D7D97CDD

OZ5eQ5AD>B
BDF79DF93D7D9GG7A

OZ5Sd588C9
AD79CEBG3GGBEG97

OZ5dP58C>E
AC7DE /40

OZ5dP5EAB8
D7DC9BDD

OZ5eQ5EGFA
C8EEEE8E3D7D99D9A

OZ5Zd588C>
BDFB8BGF3BDFBAAFG

OZ5dP598FAB
BDB79F9C3D7DF9DAD

OZ5dP5EAB9
D7DFDFG8 /40BD7DFDFG9 /40

OZ5eQ5EGFB
C8EEEE8F3D7D99D9B

OZ5Zd5ECB>
D7D8ACEC3D7DGG798

OZ5dP59E>8
C7C7GAAGo8

OZ5eQ588CD
C7C7GAB73D7DB9BDC

OZ5eQ5F8EG
C7C7GAB73D7DB9BDC

OZ5dP58BGG
D7D97CDD

OZ5dP59E>9
D7DCE9BCD /40

OZ5eQ588CE
C7C7GAAG3D7DC9BDD

OZ5eQ5F8F8
C7C7GAAG3D7DC9BDD

OZ5dP58C88
D7D97CDC

OZ5dP5DD>F
BDCCC8FA

OZ5eQ598DDG
C8EEDA9E3C8FAB7GA

Y9C89F9
GGBEG98

OZ5dP58C89
D7DC9BDC

OZ5dP5DDFE
C8ECB8GF

OZ5eQ598DE8
C8EEDA9D3C8FAB7GB

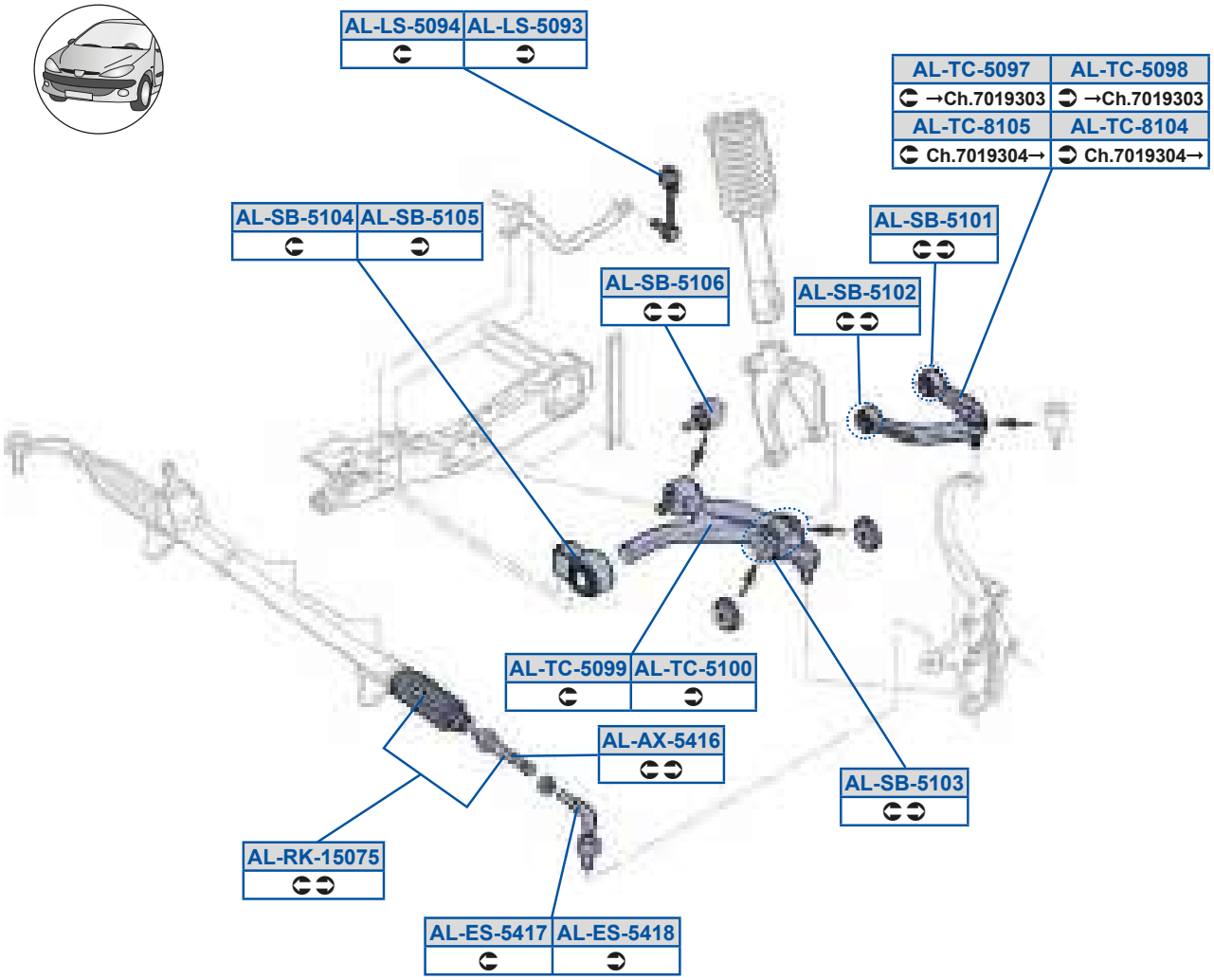
AL-LS-5094
AL-LS-5093
AL-TC-5097
AL-TC-5098
→Ch.7019303
→Ch.7019303
AL-TC-8105
AL-TC-8104
Ch.7019304→
Ch.7019304→
AL-SB-5104
AL-SB-5105
AL-SB-5101
AL-SB-5106
AL-SB-5102
AL-TC-5099
AL-TC-5100
AL-AX-5416
AL-SB-5103
AL-RK-15075
AL-ES-5417
AL-ES-5418

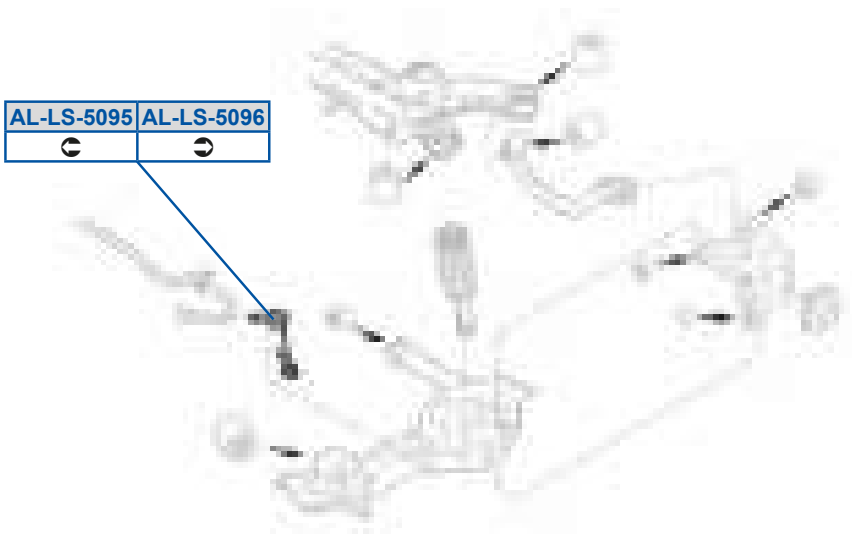
AL-LS-5095
AL-LS-5096

OZ5Oi 5CB9D
EEADBEC7

OZ5Sd5CB9E
EEADAE7D

OZ5Sd5CB9F
EEADAE7E

OZ5Zd5C8GA
C7E7BAD93C7E7DGG8

OZ5Zd5C8GB
C7E7BAD83C7E7DGG7

OZ5Zd5C8GC
C7E7BDF73C7E7CA88

OZ5Zd5C8GD
C7E7DCGC3C7E7DCGF

OZ5c Y59C8EC
EEADBEC7

OZ5dP5C989
C7E7BGBE /40C7E7BGBF /40

OZ5dP5C98>
C7E7BGBE /40C7E7BGBF /40

OZ5dP5C98A
C7E7BA7D /40C7E7BA7E /40

OZ5dP5C98B
C7E7DGCB3C7E7FE98

OZ5dP5C98C
C7E7DGCC3C7E7FE99

OZ5dP5C98D
C7E7BA7D /40C7E7BA7E /40

OZ5eQ5C8GE
C7E7BGBE3C7E7EBF8

OZ5eQ5C8GF
C7E7BGBF3C7E7EBF7

OZ5eQ5C8GG
C7E7BA7D3C7E7DFCF

OZ5eQ5C988
C7E7BA7E3C7E7DFCG

OZ5eQ5F98B
C7E7BGBF3C7E7EBF7

OZ5eQ5F98C
C7E7BGBE3C7E7EBF8

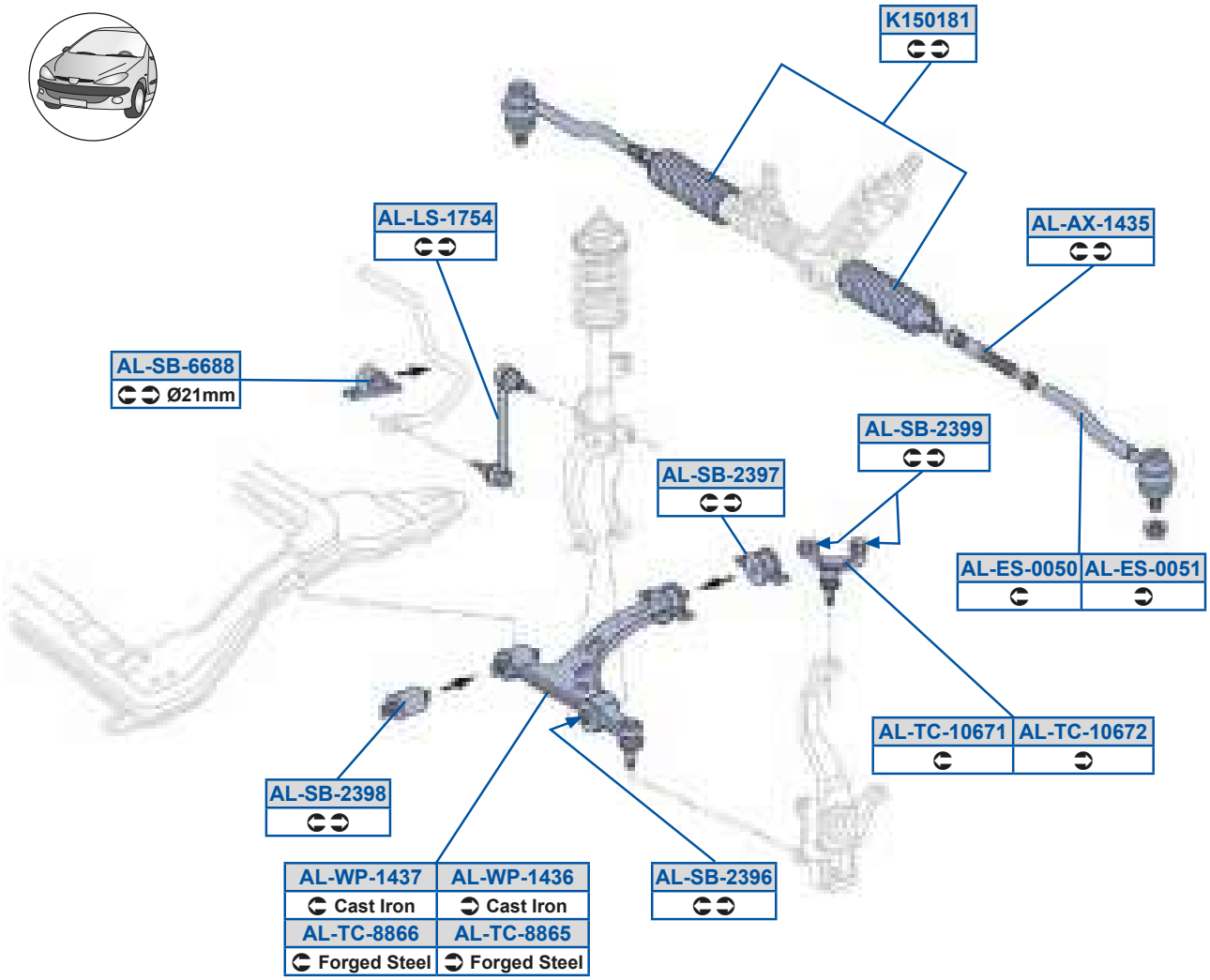
K150181
AL-LS-1754
AL-AX-1435
AL-SB-6688
Ø21mm
AL-SB-2399
AL-SB-2397
AL-ES-0050
AL-ES-0051
AL-TC-10671
AL-TC-10672
AL-SB-2398
AL-WP-1437
Cast Iron
AL-WP-1436
Cast Iron
AL-TC-8866
Forged Steel
AL-TC-8865
Forged Steel
AL-SB-2396

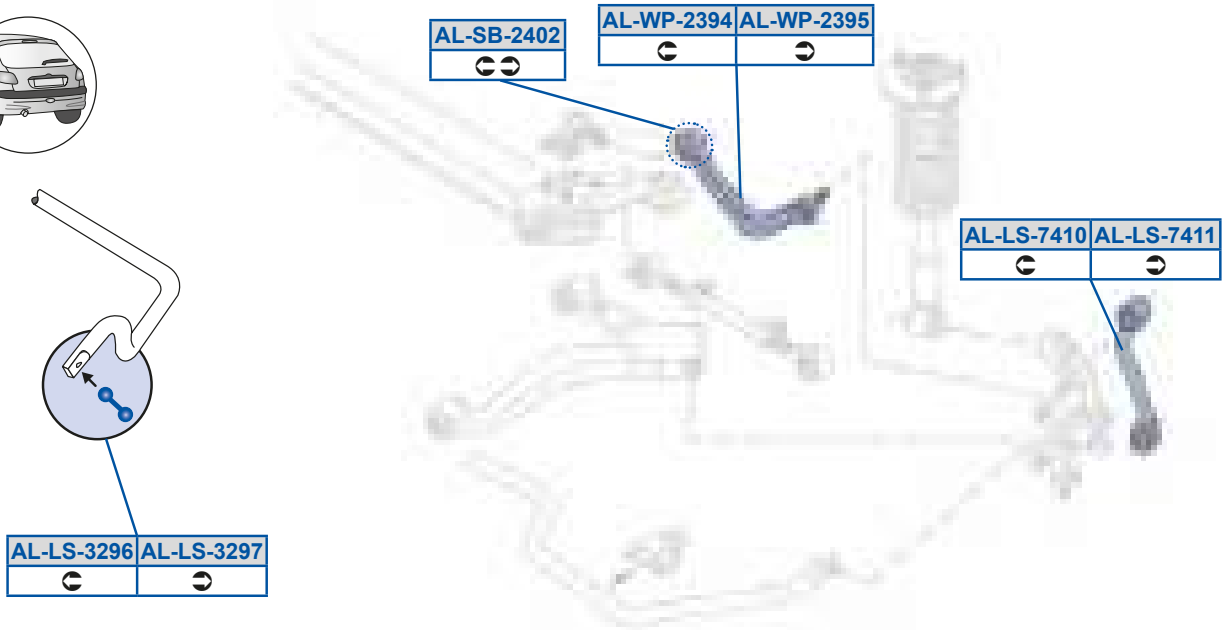
AL-SB-2402
AL-WP-2394
AL-WP-2395
AL-LS-7410
AL-LS-7411
AL-LS-3296
AL-LS-3297

OZ5Oi 59BAC
GGBF9GE

OZ5dP5>AGD
D7DGCFGC3D7DGCFGCo8

OZ5eQ5FFDC
D7D9E9G73D7DDCF7B

OZ5Sd588C8
AD79CEBF3GGBEG8G

OZ5dP5>AGE
D7DGCFGC3D7DGCFGCoA

OZ5eQ5FFDD
D7D9E9G83D7DDCF7C

OZ5Sd588C9
AD79CEBG3GGBEG97

OZ5dP5>AGF
D7D9E9G7

OZ5ha59BAD
D7D9E9G83D7DDCF7C

OZ5Zd59ECB
77D7DA7ECE3D7DA7ECE

OZ5dP5>AGG
D7DDD798

OZ5ha59BAE
D7D9E9G73D7DDCF7B

OZ5Zd5A>GD
D7D9F9CC3D7D9F9FB

OZ5dP5>B8>
D7D9FA7A /403D7D9FA7E /40

OZ5ha5>AGB
D7D9FA7A

OZ5Zd5A>GE
D7D9F9CC3D7D9F9FB

OZ5dP5DDFF
D7DDD798

OZ5ha5>AGC
D7D9FA7E

OZ5Zd5EB98
D7D9F9GB

OZ5eQ598DE9
D7DCACC83D7DCACC9

Y9C89F9
GGBEG98

OZ5Zd5EB99
D7D9F9GC

OZ5eQ598DE>
D7DCACC93D7DDD797

OZTO c _ [S_

PcSc0	8978D 8C799	daWRSc 0GAG1	8G78D 8A799

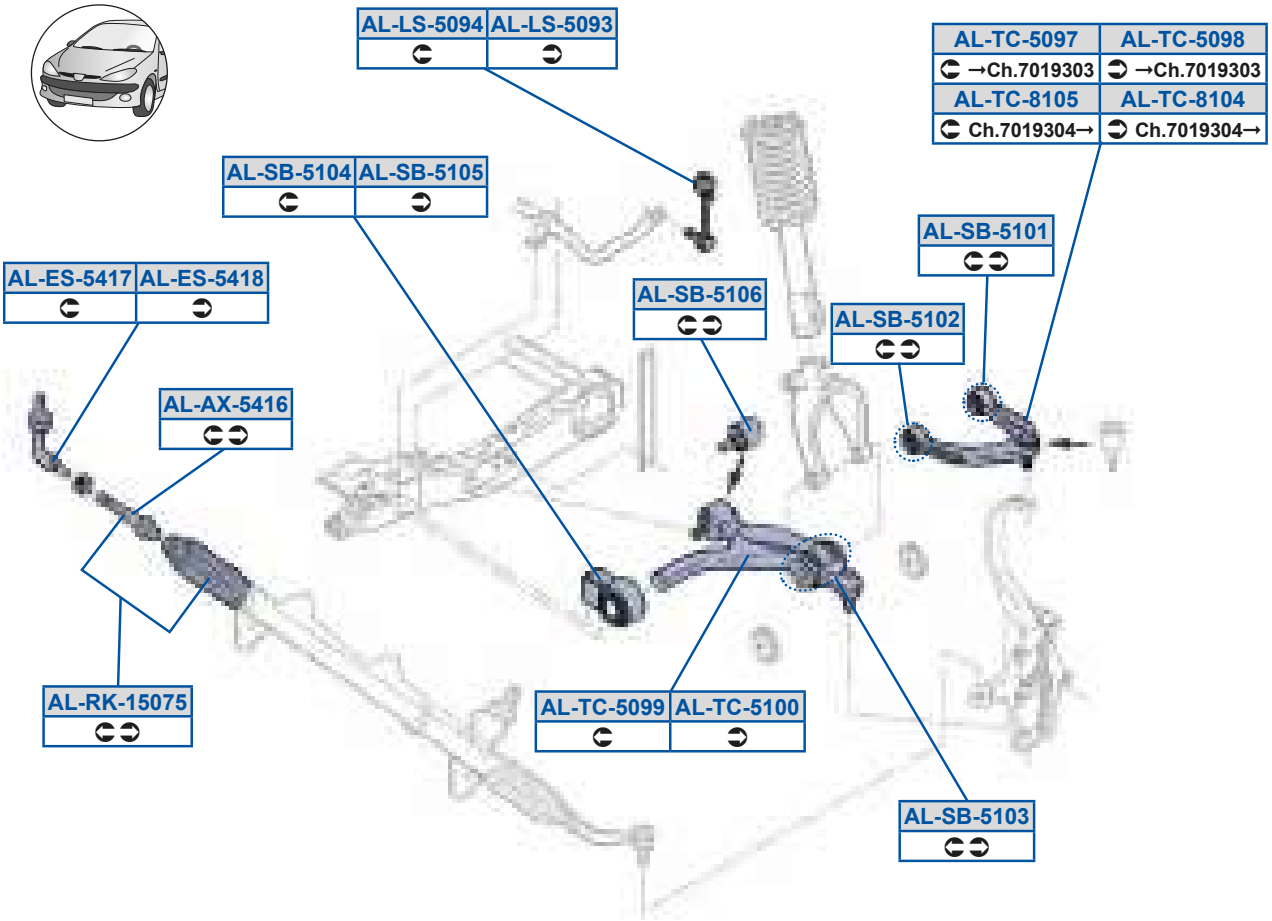

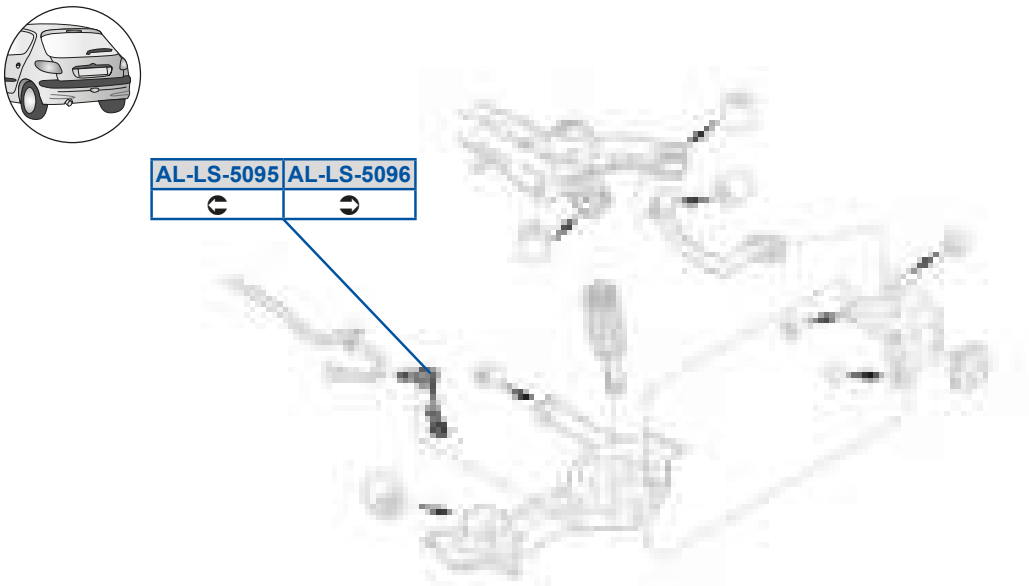

MOOG

OZ5Oi 5CB9D
EEADBEC7

OZ5Sd5CB9E
EEADAE7D

OZ5Sd5CB9F
EEADAE7E

OZ5Zd5C8GA
C7E7BAD93C7E7DGG8

OZ5Zd5C8GB
C7E7BAD83C7E7DGG7

OZ5Zd5C8GC
C7E7BDF73C7E7CA88

OZ5Zd5C8GD
C7E7DCGC3C7E7DCGF

OZ5c Y59C8EC
EEADBEC7

OZ5dP5C989
C7E7BGBE /408C7E7BGBF /40

OZ5dP5C98>
C7E7BGBE /408C7E7BGBF /40

OZ5dP5C98A
C7E7BA7D /408C7E7BA7E /40

OZ5dP5C98B
C7E7DGCB3C7E7FE98

OZ5dP5C98C
C7E7DGCC3C7E7FE99

OZ5dP5C98D
C7E7BA7D /408C7E7BA7E /40

OZ5eQ5C8GE
C7E7BGBE3C7E7EBF8

OZ5eQ5C8GF
C7E7BGBF3C7E7EBF7

OZ5eQ5C8GG
C7E7BA7D3C7E7DFCF

OZ5eQ5C988
C7E7BA7E3C7E7DFCG

OZ5eQ5F98B
C7E7BGBF3C7E7EBF7

OZ5eQ5F98C
C7E7BGBE3C7E7EBF8

UWZWeeO 0GB81	8B798		

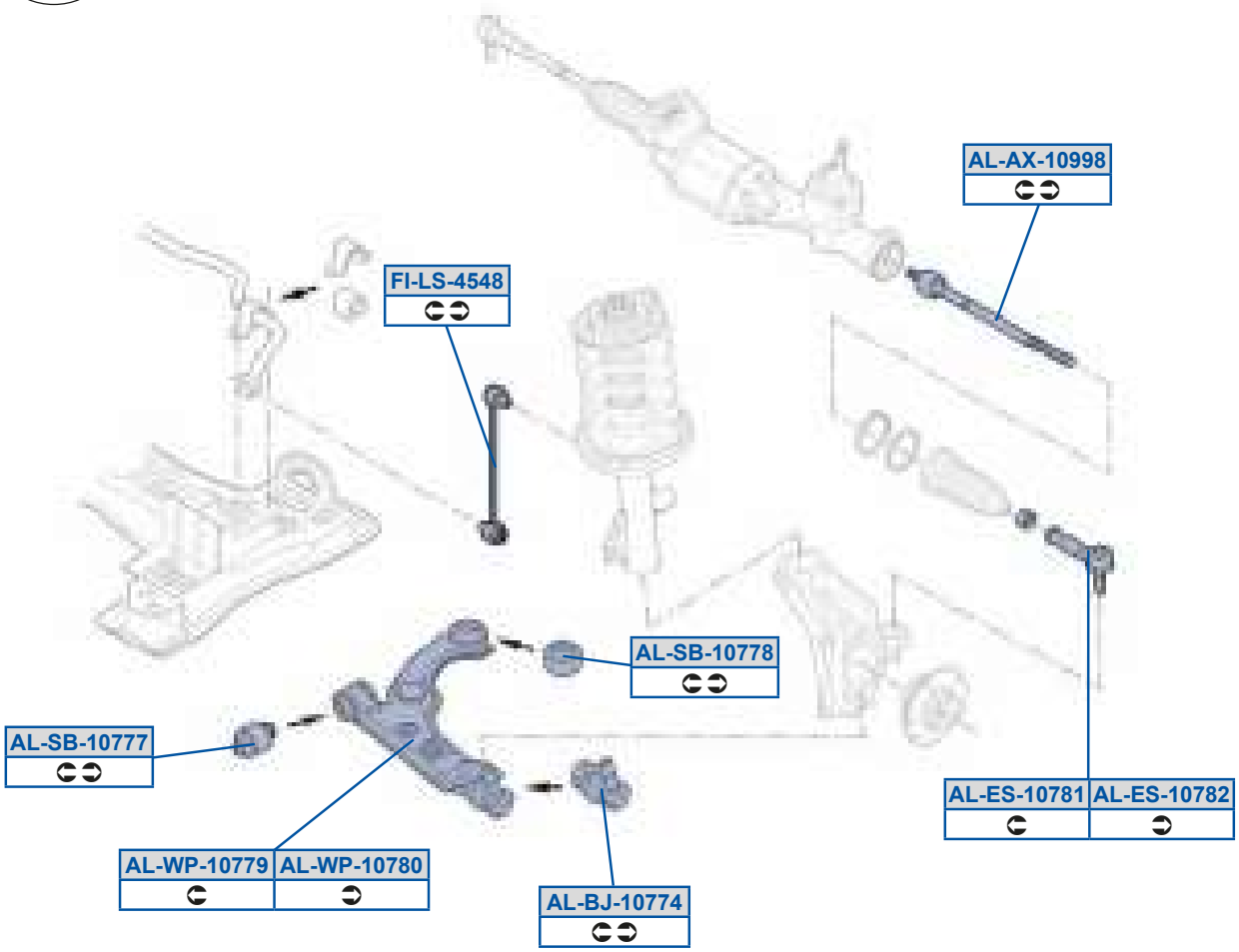

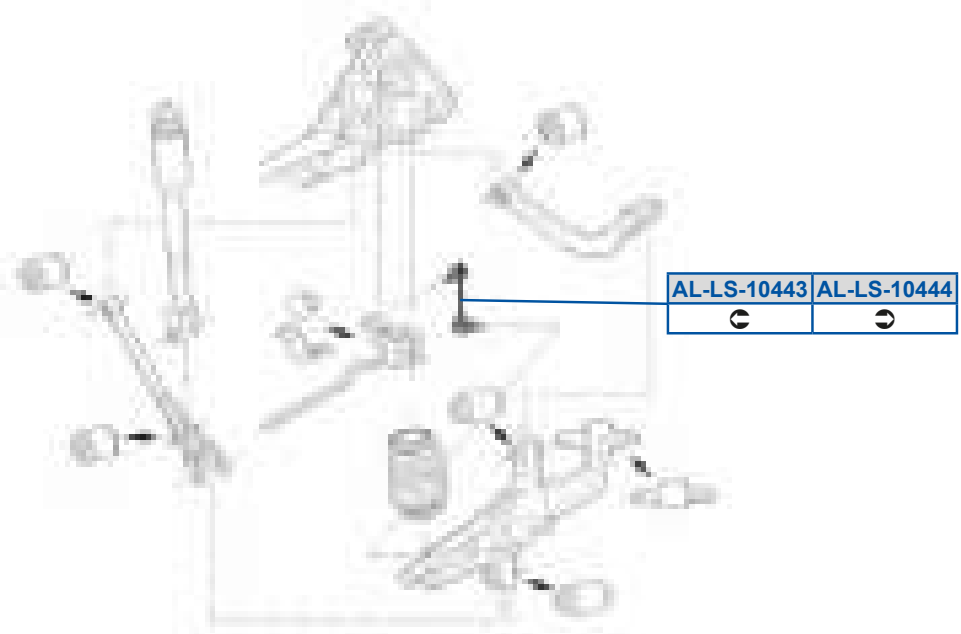

OZ5Oi 598GGF
C7C8GB9E /40

OZ5PX598EEB
C7C8ABB9 /40 8C7C8ABBB /40

OZ5Sd598EF9
C7C97AC93EEADCCG9

OZ5Sd598EF>
C7C97ACA3EEADCCG8

OZ5Zd598BBA
C7C8C9EB

OZ5Zd598BBB
C7C8C9EC

OZ5dP598EEE
C7C8ABB9 /40 8C7C8ABBB /40

OZ5dP598EEF
C7C8ABB9 /40 8C7C8ABBB /40

OZ5h a598EEG
C7C8ABBB3C7C987BD

OZ5h a598EF8
C7C8ABB93C7C987BC

TW5Zd5BCBF
C7C8C9ED3C7CA8F9A

OZTO c _ [S_

Ueg 0G9DQr 1	8G7GB 9878C	daWRSc 0G9Dr 1	8C7GF 8B78C
daWRSc 0G9Ddr 1	8G7GB 8B78C		

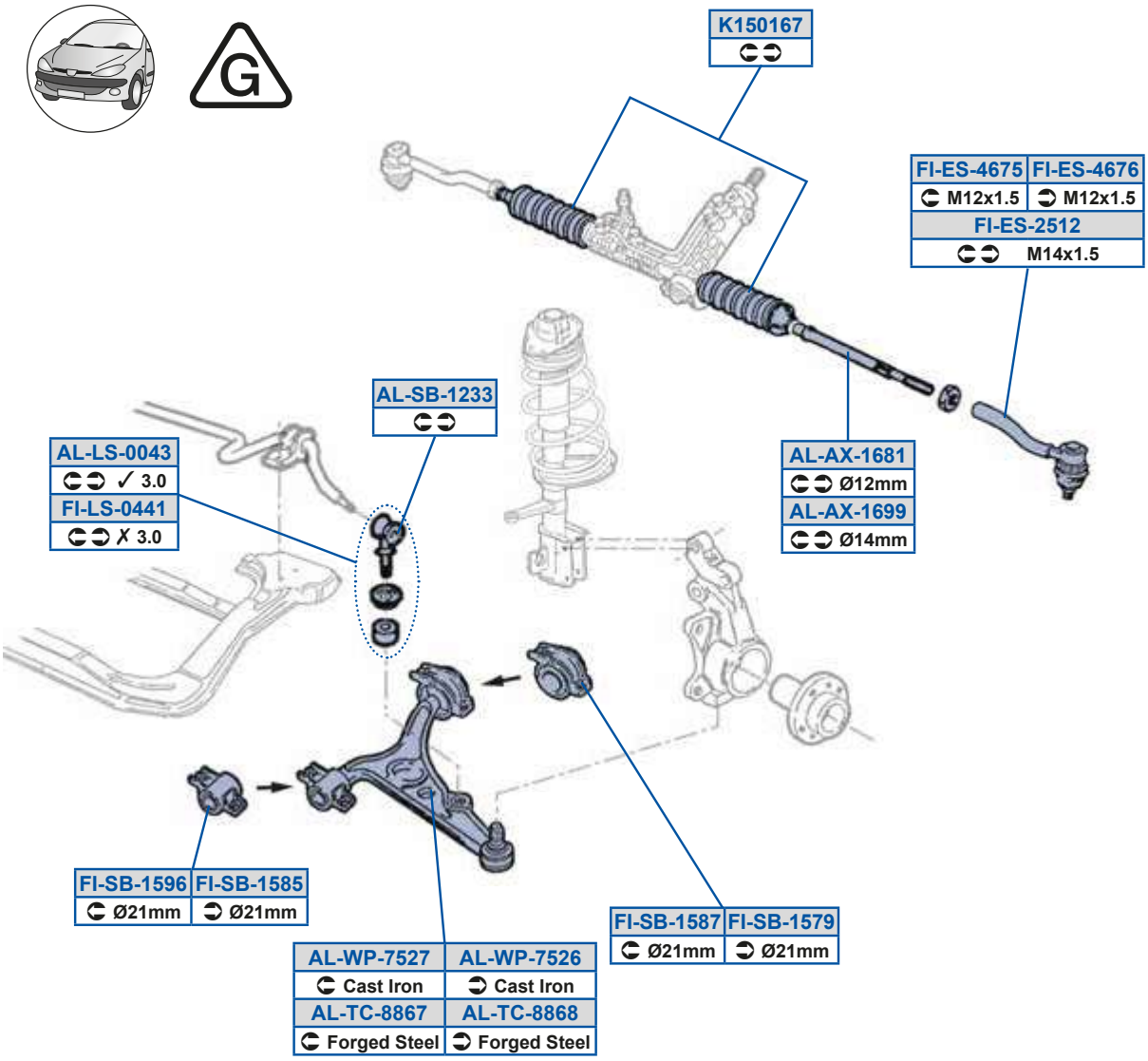

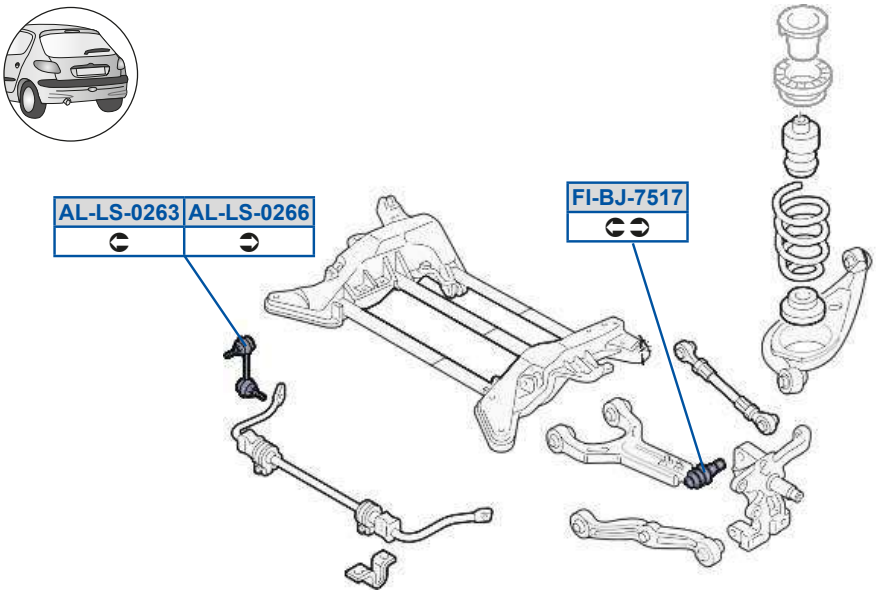

MOOG

OZ5Oi 59DF9
G7C7BC93GGBBBC9

OZ5h a5EC>D
BDB9AF9C3BDBEBCCD

TV5dP59CFC
ED787DB

OZ5Oi 59DGG
GGBEE8F

OZ5h a5EC>E
BDB9AF9B3BDBEBCCD

TV5dP59CFE
ED787DC

OZ5Zd588BA
D7D8BC8B

TV5PX5EC9E
D7D899GB3D7D89A8E

TV5dP59CGD
ED787DB

OZ5Zd58>DA
D7D89BAC3D7D89BAD

TV5Sd5>C9>
GFFBC7A73GGBEE8G

Y9C89DE
GGC7DC7

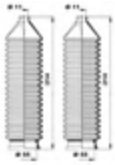

OZ5Zd58>DD
D7D89BAC3D7D89BAD

TV5Sd5BDEC
D7CDCE7D3ECG898D

OZ5dP59>AA
D7F7DB7F3ED78DB9

TV5Sd5BDED
D7CDCE7C3ECG898C

OZ5eQ5FFDE
BDB9AF9B3BDBEBCCD

TV5Zd58BB9
D7CE7D9E3D7F7ECFA

OZ5eQ5FFDF
BDB9AF9C3BDBEBCCD

TV5dP59CEG
ED787DF

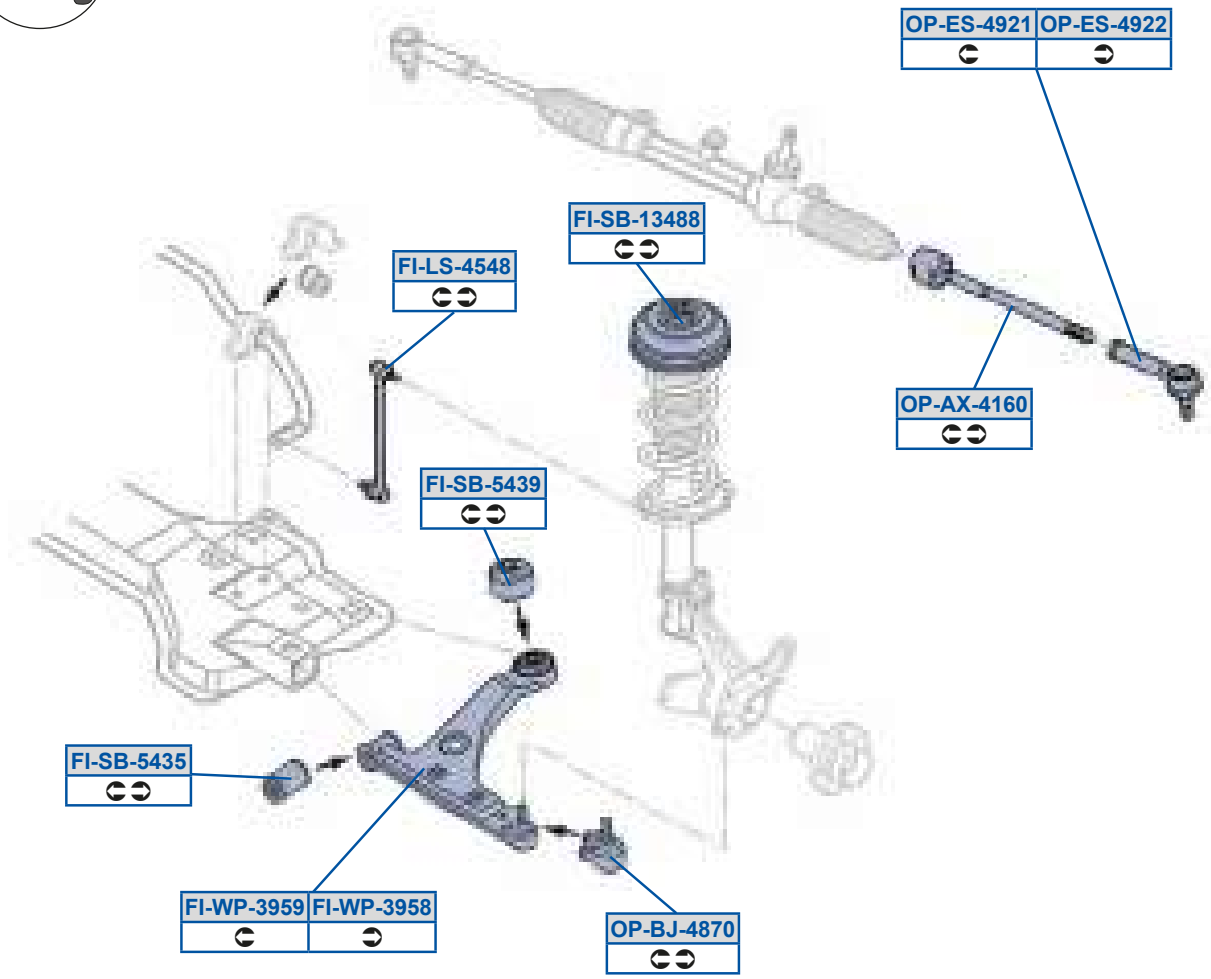
OP-ES-4921
OP-ES-4922
FI-SB-13488
FI-LS-4548
OP-AX-4160
FI-SB-5439
FI-SB-5435
FI-WP-3959
FI-WP-3958
OP-BJ-4870

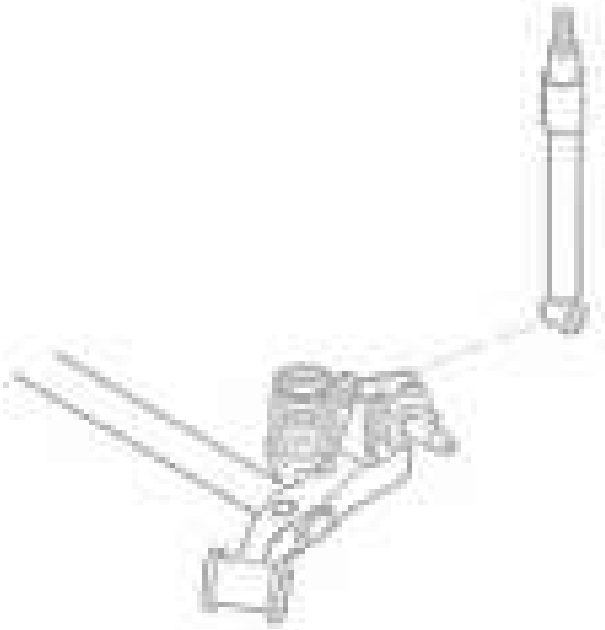

TVWZd5BCBF
C7C8C9ED3C7CA8F9A

TVWdP59ABFF
C7C878AB3C7C98E7E

TVWdP5CBAC
AC9AF73CCE7A9A9

TVWdP5CBAG
CCE77EC8

TVWh a5AGCF
C7C88DC73C8EFA7CD

TVWh a5AGCG
C8EFA7CE3C8FG99E9

_ a5Oi 5B9D8
8D7ABCD38D7ACBA

_ a5PX5BFE8
AC97DE3AC97FE

_ a5Sd5BG>9
EEADAF9G

_ a5Sd5BG>>
EEADAFA7

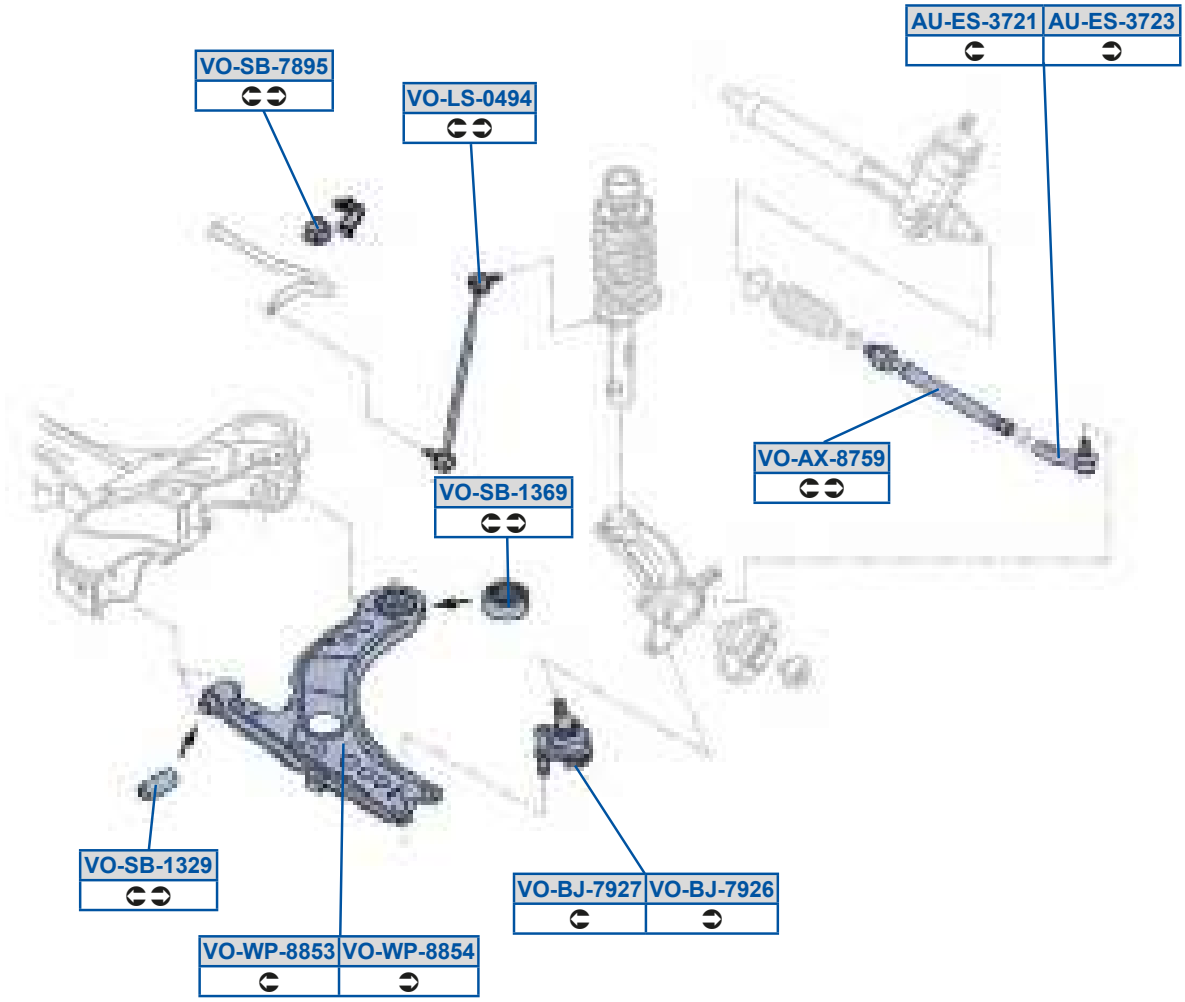

✗ Quattro

✓ Quattro

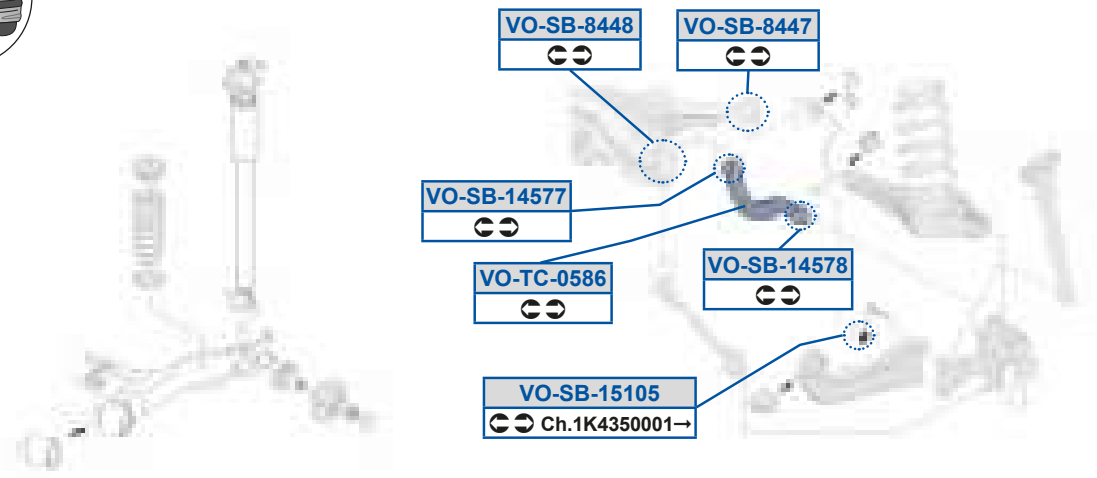

Of 5Sd5AE>9
Cu7B99F88O3DI 7B9AF88

Of 5Sd5AE>A
DI 7B9AF893DI 7B9AF89Q

g_ 5Oi 5FECG
Dn7B9AF7AQ3Dn7B9AF7AR

g_ 5PX5EG>D
Cu7B7EADDO3Dn7B7EADD

g_ 5PX5EG>E
Cu7B7EADCO3Dn7B7EADC

g_ 5Zd58BGB
DI 7B88A8CO3DI 7B88A8CP

g_ 5dP59A>G
8G8B7E8F93ACEB7E8F9

g_ 5dP59ADG
8X7B7E8F838X7B7E8F8O

g_ 5dP59BCEE
CI 7 C78 C9G P /40

g_ 5dP59BCEF
CI 7C78C9GQ /4O3CI 7C7CCBAP

g_ 5dP59C98C
8Y7C7CBDCQ /40

g_ 5dP5EFGC
DI 7B88A8Ba 3DI 7B88A8BI

g_ 5dP5FBBE
8Y7C7C8BCS38Y7C7C8BCU

g_ 5dP5FBBF
8Y7C7C8BCT38Y7C7C8BCV

g_ 5eQ58CFD
8Y7C7CA9AV38Y7C7CA9Ad

g_ 5h a5FFCA
Dn7B7E8C8O3Dn7B7E8C8P

g_ 5h a5FFCB
Dn7B7E8C9O3Dn7B7E8C9P

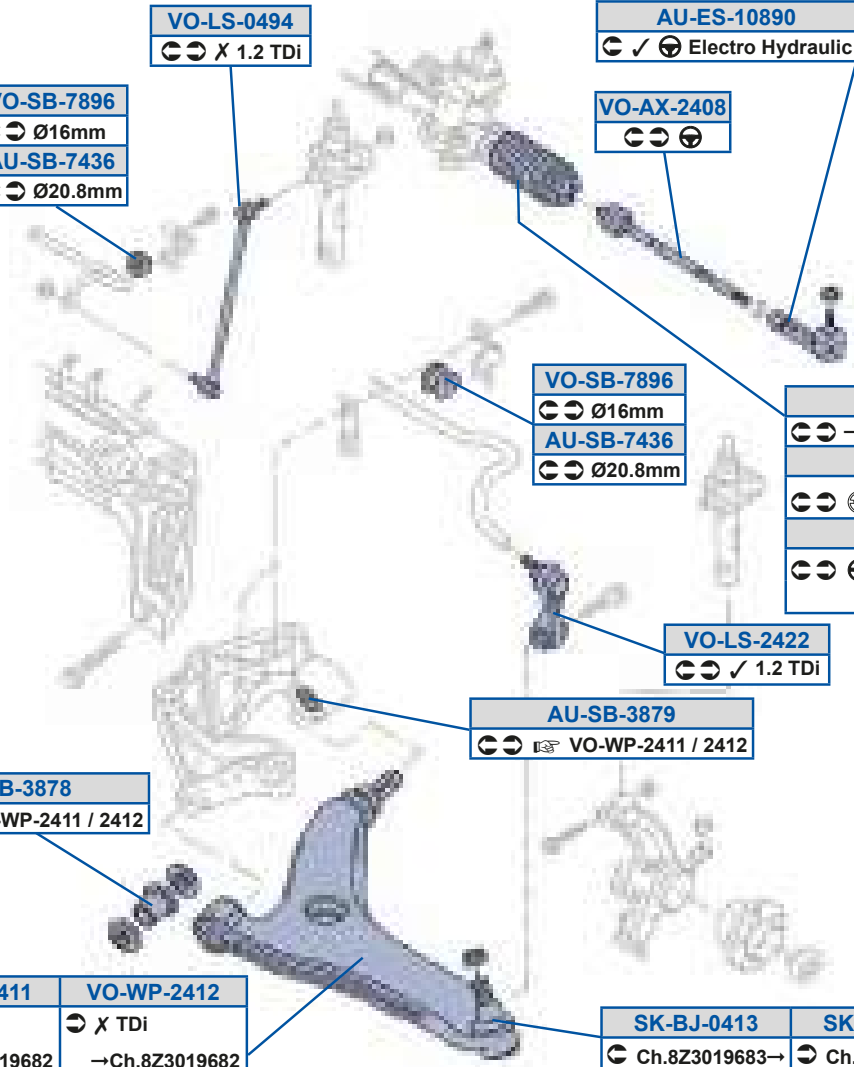

VO-ES-1507	VO-ES-1506
✗ Electro Hydraulic	✗ Electro Hydraulic
AU-ES-10890	**AU-ES-10889**
✓ Electro Hydraulic	✓ Electro Hydraulic

VO-LS-0494
✗ 1.2 TDi

VO-SB-7896
Ø16mm
AU-SB-7436
Ø20.8mm

VO-AX-2408

VO-SB-7896
Ø16mm
AU-SB-7436
Ø20.8mm

K150083
→ Ch.823027000
K150187
Ch.823027001 →
K150235
Electro Hydraulic
Ch.823027001 →

VO-LS-2422
✓ 1.2 TDi

AU-SB-3879
VO-WP-2411 / 2412

AU-SB-3878
VO-WP-2411 / 2412

VO-WP-2411	VO-WP-2412
✗ TDi →Ch.8Z3019682 →11/2002	✗ TDi →Ch.8Z3019682 →11/2002
VO-WP-2413	**VO-WP-2414**
✓ TDi Ch.8Z3019683→ 01/2003→	✓ TDi Ch.8Z3019683→ 01/2003→

SK-BJ-0413	SK-BJ-0414
Ch.8Z3019683→ 11/2002→	Ch.8Z3019683→ 11/2002→

AU-SB-8039

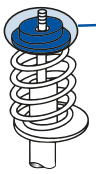

VO-SB-10063

MOOG

Of 5Sd598FFG
F 7B9AF890

Y9C8>AC
DI 7B9AFA8R

g_ 5dP5988DA
8X7C8AACAP38X7C8AACAQ

Of 5Sd598FG8
F 7B9AF880

dY5PX58B9A
F 7B7EADC0

g_ 5dP5EFGD
DI 7B88A8BX3DI 7B88A8BZ

Of 5dP5AFEF
F 7B7E8F9P3F 7B7E8F9Q

dY5PX58B9B
F 7B7EADD0

g_ 5h a5>B99
F 7B7E8C8X

Of 5dP5AFEG
F 7B7E8FA0

g_ 5Oi 5>B8F
F 7B9AF7AQ /40

g_ 5h a5>B9>
F 7B7E8C9X

Of 5dP5EBAD
F 7B88A8BP

g_ 5Sd59C8D
8X7B99F89P

g_ 5h a5>B9A
F 7B7E8CAZ

Of 5dP5F8AG
F 7C78CB8

g_ 5Sd59C8E
8X7B99F88P

g_ 5h a5>B9B
F 7B7E8CAZ

Y9C88FA
DS7B8GFA83Dd7B99FA8

g_ 5Zd58BGB
DI 7B88A8C03DI 7B88A8CP

Y9C89FE
DS7B8GFA8

g_ 5Zd5>B>>
F 7B88A8CP3F 7B88A8CQ

0A 0FZ91	8G7GD 8C78A		

VO-SB-14966
Ø10mm ✓4x4
VO-SB-14628
Ø15mm
VO-SB-6818
Ø17mm
VO-SB-13250
Ø19mm
VO-SB-7422
Ø20mm
AU-SB-4847
Ø21mm
VO-SB-6796
Ø23mm

VO-ES-8283	VO-ES-8285
→Ch. 8L-W050421	→Ch. 8L-W050421
VO-ES-1507	VO-ES-1506
Ch. 8L-W050422→	Ch. 8L-W050422→
VO-ES-2405	VO-ES-2404
✓S3	✓S3

VO-AX-8286
→Ch. 8L-W050421
VO-AX-13741
Ch. 8L-W050422→

K150182

VO-SB-10053

AU-SB-7331
✓ S3

VO-SB-1369

VO-SB-4523

VO-RK-15052
Ch. 8L-W050422→

VO-DS-8281	VO-DS-8284
→Ch. 8L-W050421	→Ch. 8L-W050421
VO-DS-1549	VO-DS-1548
Ch. 8L-W050422→	Ch. 8L-W050422→

VO-WP-1553	VO-WP-1552
AU-TC-8869	AU-TC-8870
✓S3	✓S3

VO-SB-1329

VO-BJ-8287	VO-BJ-8288
✗ S3	✗ S3
VO-BJ-2410	
✓ S3	

VO-LS-0475
Fe 105mm Ø23mm ✗ 4x4
VO-LS-4916
✓ P Ø21mm ✗ 4x4

VO-LS-2406	VO-LS-0456
Fe 336mm ✓ 4x4 Ch. 8L-X140001→	Fe 336mm ✓ 4x4 Ch. 8L-X140001→

VO-RK-4853
❶+❷+❸+❹ ✗ 4x4

✗ Quattro

VO-SB-10063

✓ Quattro

VO-SB-13631
Ø18mm

VO-SB-10130

VO-LS-3680
AU-LS-4193

VO-SB-13631
Ø18mm

VO-SB-10179

VO-SB-0042
Ø72mm

VO-SB-10131

Of 5Zd5B9GA
8X7C7CBDDQ

g_ 5PX5>B98
Fd7B7EADC03Fd7B7EADCP

g_ 5Sd59C8E
8X7B99F88P

g_ 5Zd5ADF8
8X7C7CBDDP

Of 5dP5BFBE
8X7B88A8BQ

g_ 5PX5F>FE
8X7B7EADC038X7B7EADCP

g_ 5Sd5>B8B
Fd7B99F893Fd7B99F890

g_ 5Zd5BG9D
8X7B88A8C38X7B88A8CP

Of 5dP5EAA9
Dn7B7E8F8P3Fd7B7E8F8P

g_ 5PX5F>FF
8X7B7EADD038X7B7EADDP

g_ 5Sd5>B8C
Fd7B99F880

g_ 5cY59C8C>
8X7B99F7AP38X7B99F7EP

Of 5eQ5FFDG
Fd7B7E8C803Fd7B7E8C8R

g_ 5Rd59CBF
8X7B99F7B038X7B99F7BP

g_ 5Sd5F>FA
8X7B99F8838X7B99F880

g_ 5cY5BFCA

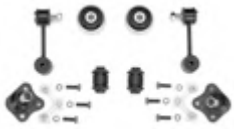

Of 5eQ5FFE8
Fd7B7E8C903Fd7B7E8C9R

g_ 5Rd59CBG
8X7B99F7A038X7B99F7AP

g_ 5Sd5F>FC
8X7B99F8938X7B99F890

g_ 5dP588B>
8X7C78CB8Q

Y9C89F>
8X7B99FA838X7B99FA8P

g_ 5Rd5F>F9
8X7B99F7A38X7B99F7A0

g_ 5Zd53BCD
8X7B88A8DR

g_ 5dP5988CA
8V7B89ADC038X7B899BG

g_ 5Oi 59AEB9
8X7B99F7AP38X7B99F7BP

g_ 5Rd5F>FB
8X7B99F7B38X7B99F7B0

g_ 5Zd53BEC
8X7B88A8C38X7B88A8CP

g_ 5dP5988DA
8X7C8AACAP38X7C8AACAQ

g_ 5Oi 5F>FD
8V7B99F7A /40

g_ 5Sd59C8D
8X7B99F89P

g_ 5Zd5>B8D
8X7B88A8CR

g_ 5dP5989A8
8X7C7C8BC038X7C7C8BCP

Of RW

OA 0FZ91	8G7GD 8C78A		

OA 0FZ 8C7>88A1 IFZ9n

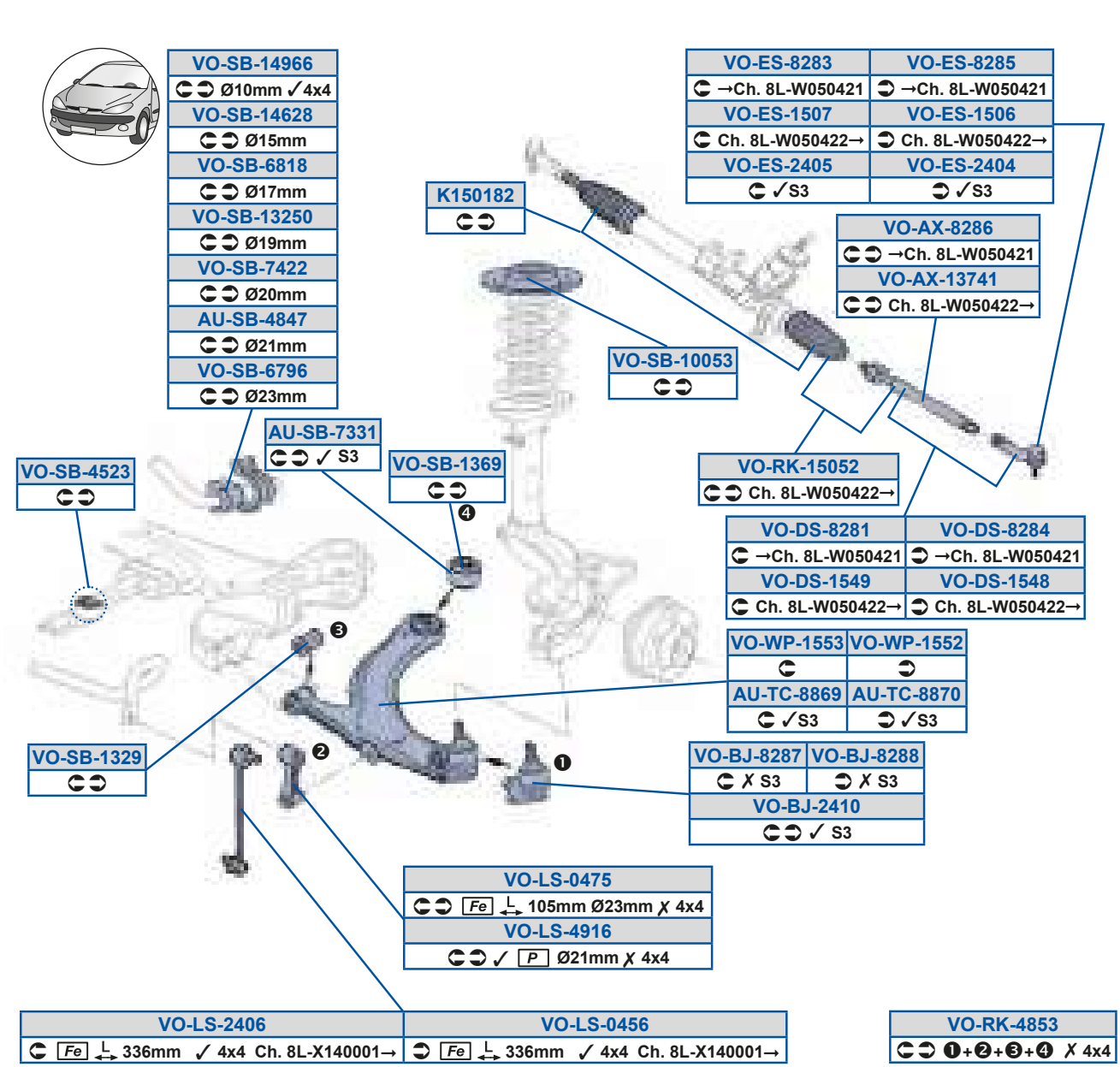

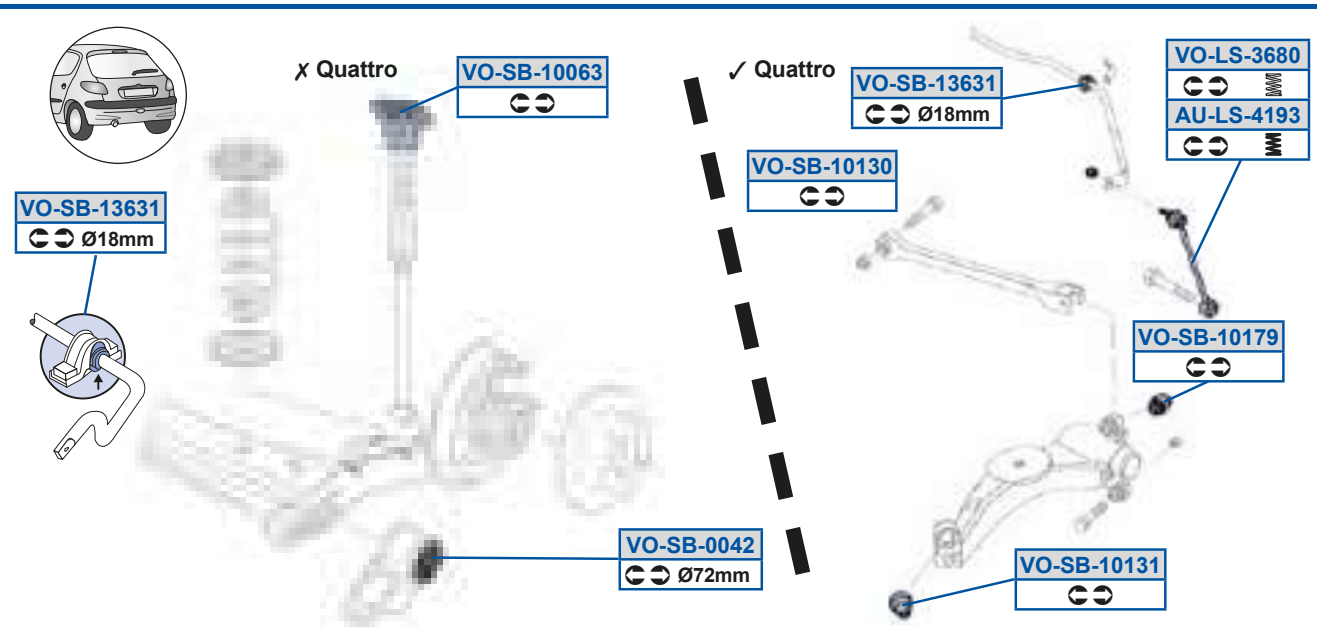

Of RW

MOOG

g_ 5dP5989A9
8X7C7C8E8P

g_ 5dP5989EG
8X7C7C97A38X7C7CADCR

g_ 5dP59A>C8
8X7B88A8Bn

g_ 5dP59A>G
8G8B7E8F93ACEB7E8F9

g_ 5dP59ADA9
FE8C88B9A

g_ 5dP59ADG
8X7B7E8F838X7B7E8F80

g_ 5dP59BD>F
8X7B88A9E

g_ 5dP59BGDD
FR7C88A9EQ

g_ 5dP5BC>A
8X78GGB9G

g_ 5dP5DEGD
8X7B88A8BU38X7B88A8Bt

g_ 5dP5DF9F
8X7B88A8B38X7B88A8Bo

g_ 5dP5EB>>
8X7B88A8Bi

g_ 5h a59CC>
8X7B7E8C8038X7B7E8C8P

g_ 5h a59CCA
8X7B7E8C8038X7B7E8C8P

Of RW

0A 0Fa91	8C78A 8F79;	0A Q x áu x 0FaE1	8B78F 8C79A
0A d ut v 0Fa01	8G78B 8A79A		

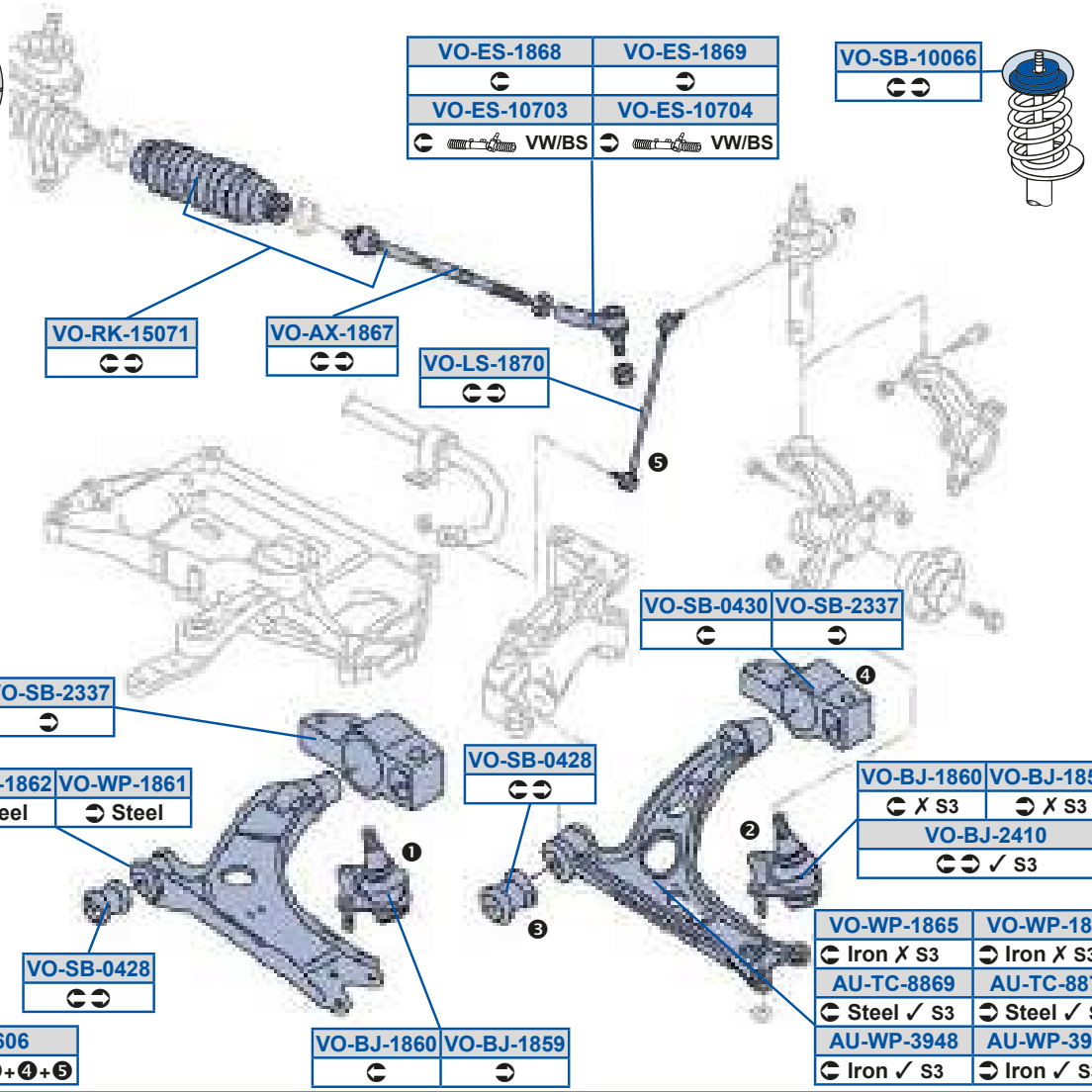

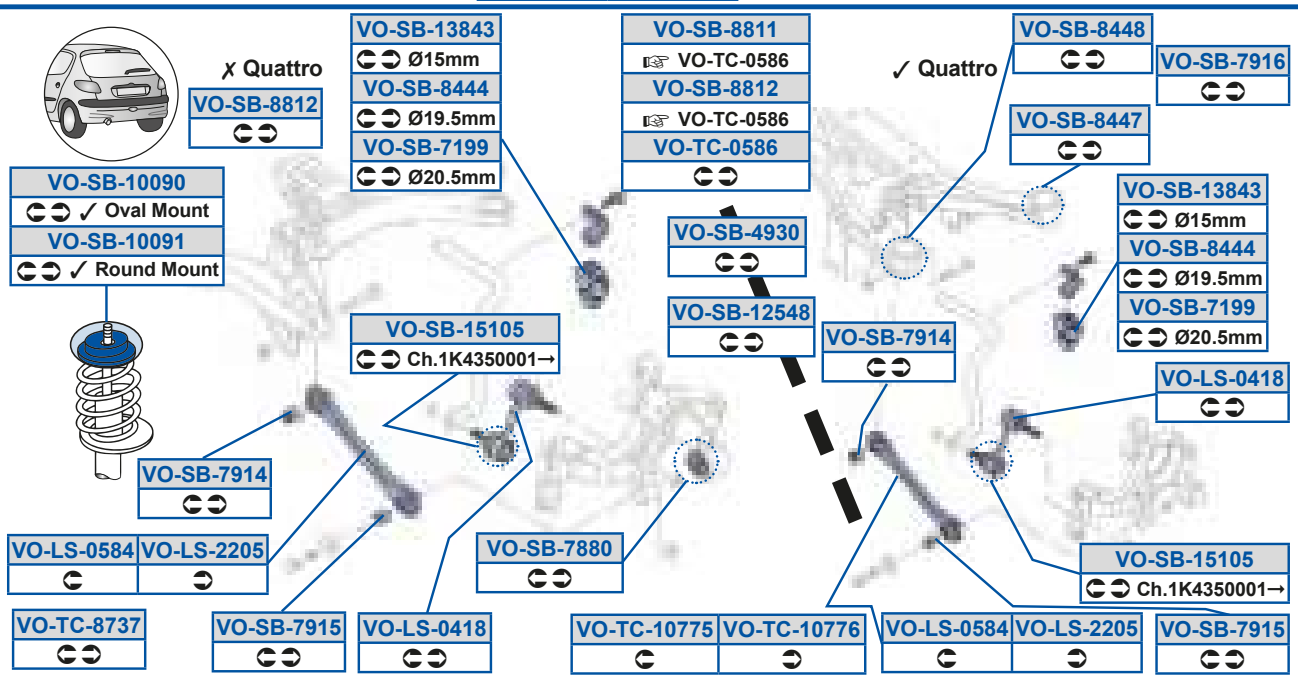

MOOG

Of 5eQ5FFDG
Fd7B7E8C803Fd7B7E8C8R

g_ 5Sd598E8A
8Y7B9AF88Q38Y7B9AF88R

g_ 5c Y59C8E9
8Y7B9AF870

g_ 5dP59AFBA
8Y7C88A9EP0

Of 5eQ5FFE8
Fd7B7E8C903Fd7B7E8C9R

g_ 5Sd598E8B
8Y7B9AF89Q38Y7B9AF89R

g_ 5c Y5DD8D

g_ 5dP59C98C
8Y7C7CBDCQ /40

Of 5h a5AGBF
Fd7B7E8C803Fd7B7E8C8R

g_ 5Sd59FDF
8Y7B9AF88O38Y7B9AF88P

g_ 5dP58B>F
8Y7B7E8F938Y7B7E8F90

g_ 5dP5>AAE
8Y78GG9A9U38Y78GG9A9X

Of 5h a5AGBG
Fd7B7E8C903Fd7B7E8C9R

g_ 5Sd59FDG
8Y7B9AF89O38Y7B9AF89P

g_ 5dP58BA8
8Y78GG9A8U38Y78GG9A8X

g_ 5dP5BGA8
8Y7C7CCB8Q38Y7C7CCB8R

g_ 5Oi 59FDE
8Y7B9AF870

g_ 5Zd58B9F
8Y7C7CBDCO38Y7C7CBDCQ

g_ 5dP5988DD
Dd7B899BGQ

g_ 5dP5E9GG
8Y7C88A9EOn

g_ 5PX59FCG
8Y7B7EADDP38Y7B7EADDQ

g_ 5Zd58CFB
8Y7C78C9GS38Y7C78C9GT

g_ 5dP5988G8
8Y7C8AACAV

g_ 5dP5EFF8
8Y7C7CCCA38Y7C7CCCAO

g_ 5PX59FD8
8Y7B7EADCP38Y7B7EADCQ

g_ 5Zd59FE8
8Y7B88A8CP38Y7B88A8CX

g_ 5dP5988G9
8Y7C8AACAX38Y7C8AACAn

g_ 5dP5EG9B
8Y7C78CB8Q

g_ 5PX5>B98
Fd7B7EADC03Fd7B7EADCP

g_ 5Zd5>>8C
8Y7C78CA7P38Y7C78CA7Q

g_ 5dP59>CBF
8Y7C7CCCA38Y7C7CCCAO

g_ 5dP5EG9C
8Y7C7CCBAO

Of RW

0A 0Fa91	8C78A 8F79;	0A Q x áu x 0FaE1	8B78F 8C79A
0A d ut v 0Fa01	8G78B 8A79A		

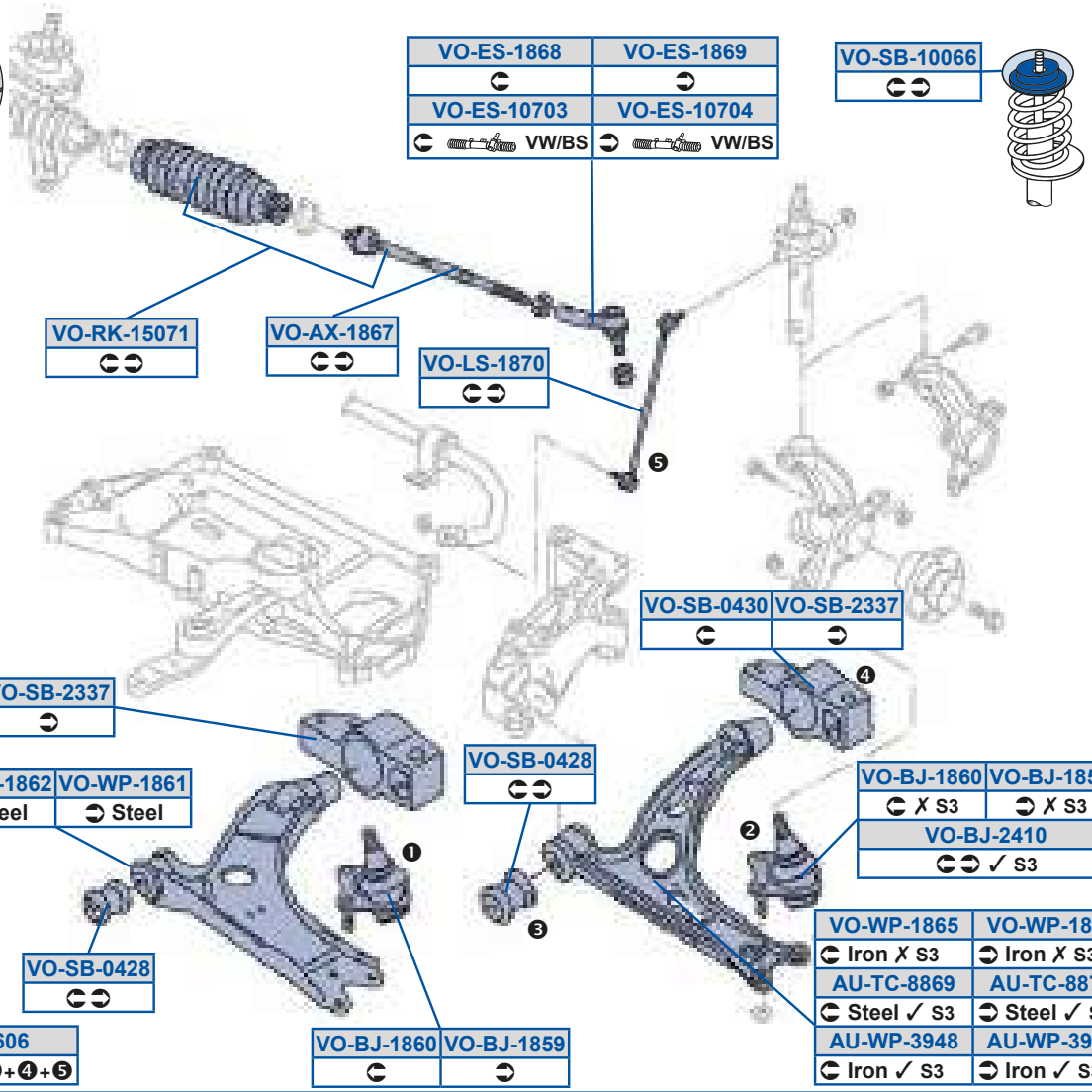

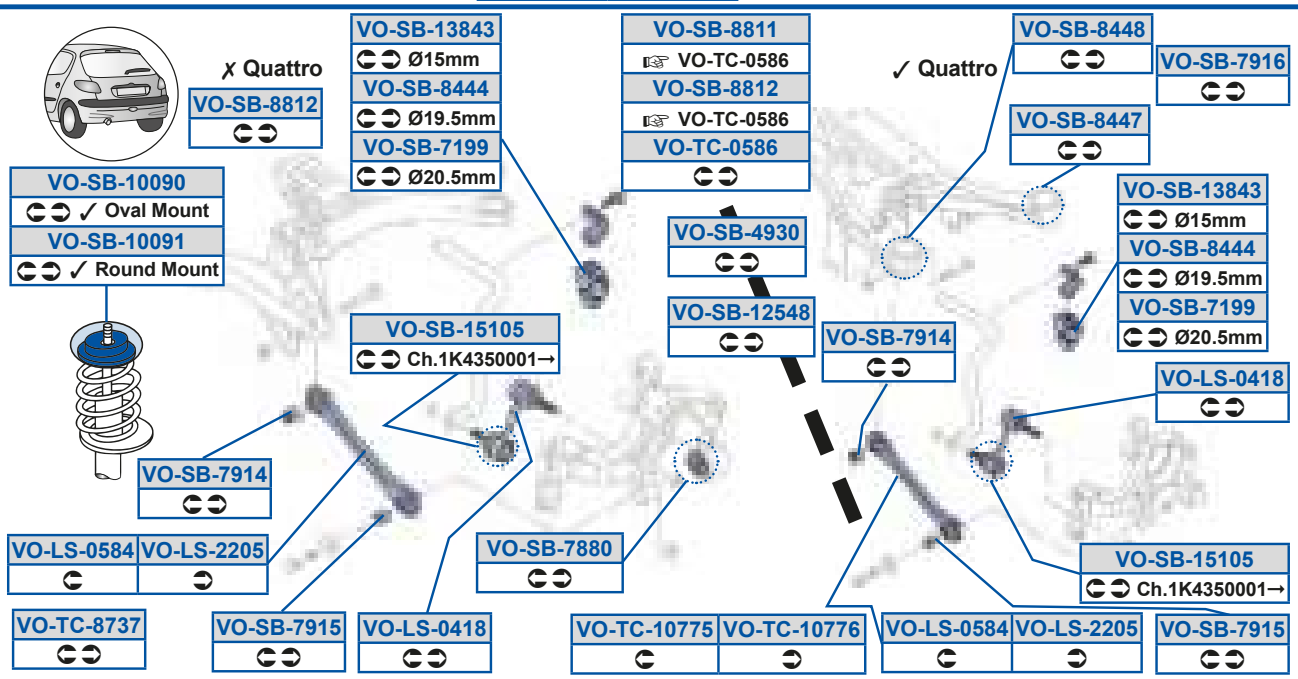

MOOG

g_ 5dP5EG9D
8Y7C7C8E8Q38Y7C7C8EAQ

g_ 5dP5FBBB
8Y7C88A9EOI

g_ 5dP5FBBE
8Y7C7C8BCS38Y7C7C8BCU

g_ 5dP5FBBF
8Y7C7C8BCT38Y7C7C8BCV

g_ 5dP5FF99
8Y7C7C9EGO

g_ 5dP5FF9>
8Y7C7C97AO

g_ 5eQ58CFD
8Y7C7CA9AV38Y7C7CA9Ad

g_ 5eQ598EEC
8Y7C7C99AS38Y7C7C99AV

g_ 5eQ598EED
8Y7C7C99BS38Y7C7C99BV

g_ 5eQ5FEAE
8Y7C7CA88O38Y7C7CA88OP

g_ 5h a59FD9
8Y7B7E8C90O38Y7B7E8C90P

g_ 5h a59FD>
8Y7B7E8C80O38Y7B7E8C80P

g_ 5h a59FDB
8Y7B7E8C90Q38Y7B7E8C90R

g_ 5h a59FDC
8Y7B7E8C80Q38Y7B7E8C80R

Of RW

OA 0Fg91	8B79;	OA Q x éu x 0FgE1	9879A
OA Zé é x 0Fgd1	8C79A	OA d ut v 0Fg01	8G79;

OA 0B7>89> 5L1 Fgpn

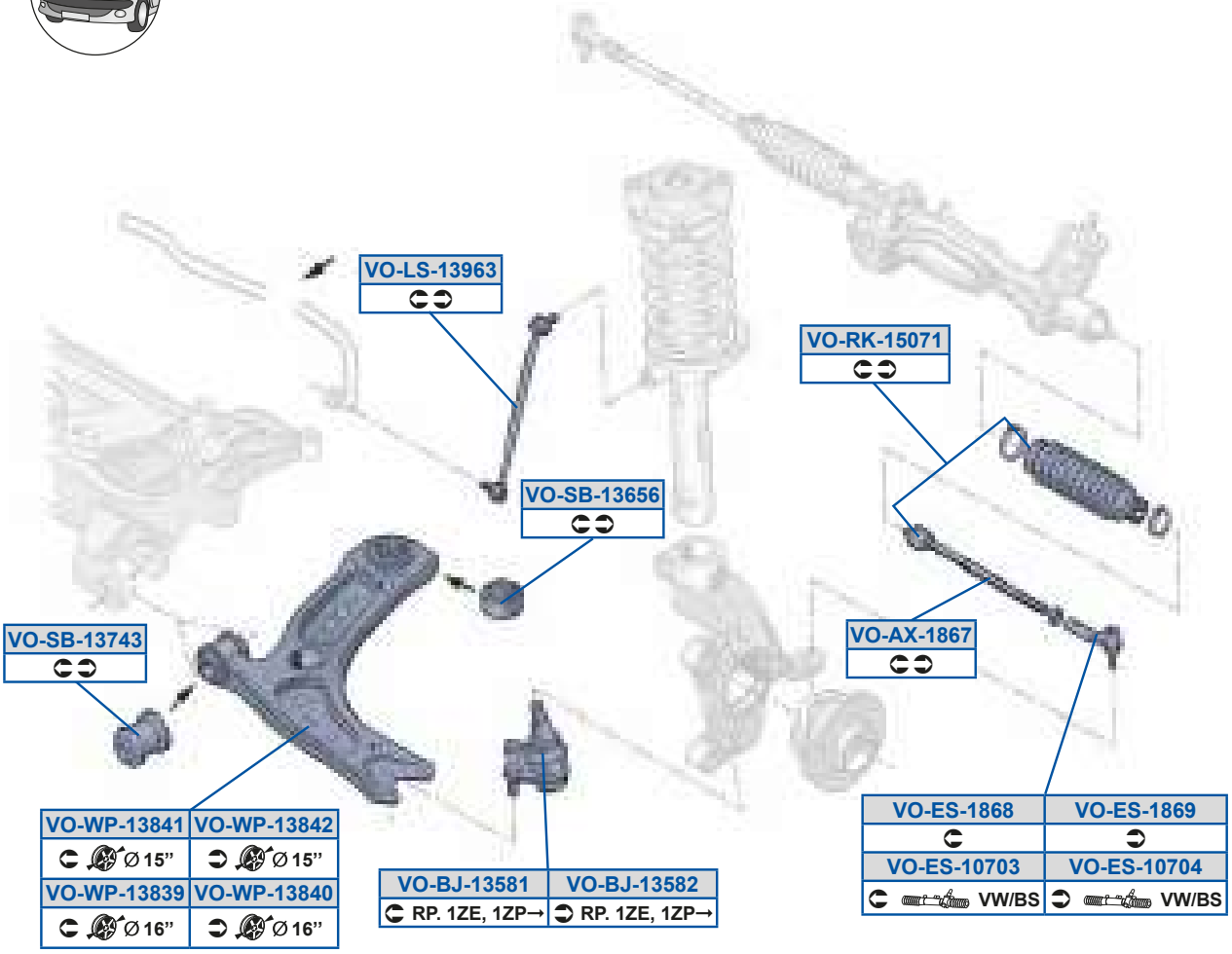

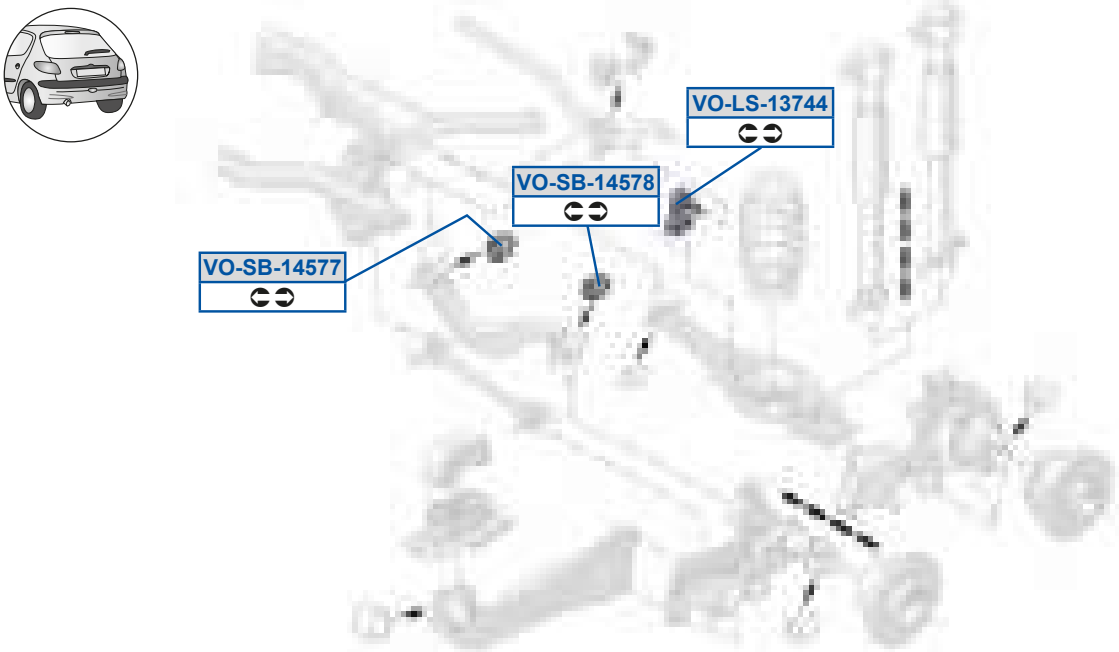

Of RW

MOOG

g_ 5Oi 59FDE
8Y7B9AF87O

g_ 5Zd59AGDA
Cl 7B88A8CP

g_ 5h a59AFB9
Cl 7B7E8C8X2 3Cl 7B7E8C8Z2

g_ 5PX59ACF9
Cl 7B7EADCO

g_ 5c Y59C8E9
8Y7B9AF87O

g_ 5h a59AFB>
Cl 7B7E8C9X2 3Cl 7B7E8C9Z2

g_ 5PX59ACF>
Cl 7B7EADDO

g_ 5dP59ADCD
Cl 7B7E8F9T3Cl 7B7E8FAS

g_ 5Sd598E8A
8Y7B9AF88Q38Y7B9AF88R

g_ 5dP59AEBA
Cl 7B7E8F93Cl 7B7E8F9O

g_ 5Sd598E8B
8Y7B9AF89Q38Y7B9AF89R

g_ 5dP59BCEE
Cl 7 C78 C9G P /40

g_ 5Sd59FDF
8Y7B9AF88O38Y7B9AF88P

g_ 5dP59BCEF
Cl 7C78C9GQ /40BCl 7C7CCBAP

g_ 5Sd59FDG
8Y7B9AF89O38Y7B9AF89P

g_ 5h a59AFAG
Cl 7B7E8C8X3Cl 7B7E8C8Z

g_ 5Zd59AEBB
Cl 7C7CBDCQ

g_ 5h a59AFB8
Cl 7B7E8C9X3Cl 7B7E8C9Z

Of RW

OB 0FR; 4PC1	997GB 8G789	OB 0FS; 4PD1	99788 9; 78B
OB 0 t 0FRC4PC1	997GB 8G789	OB 0 t 0FSC4PD1	8B789 9; 78B
OB Q x áu x 0FVE4PD4FVS4PE1	8B78; 8A78G		

OB 0FL 997>88B1 IFR4FS4FV4PC4PDn

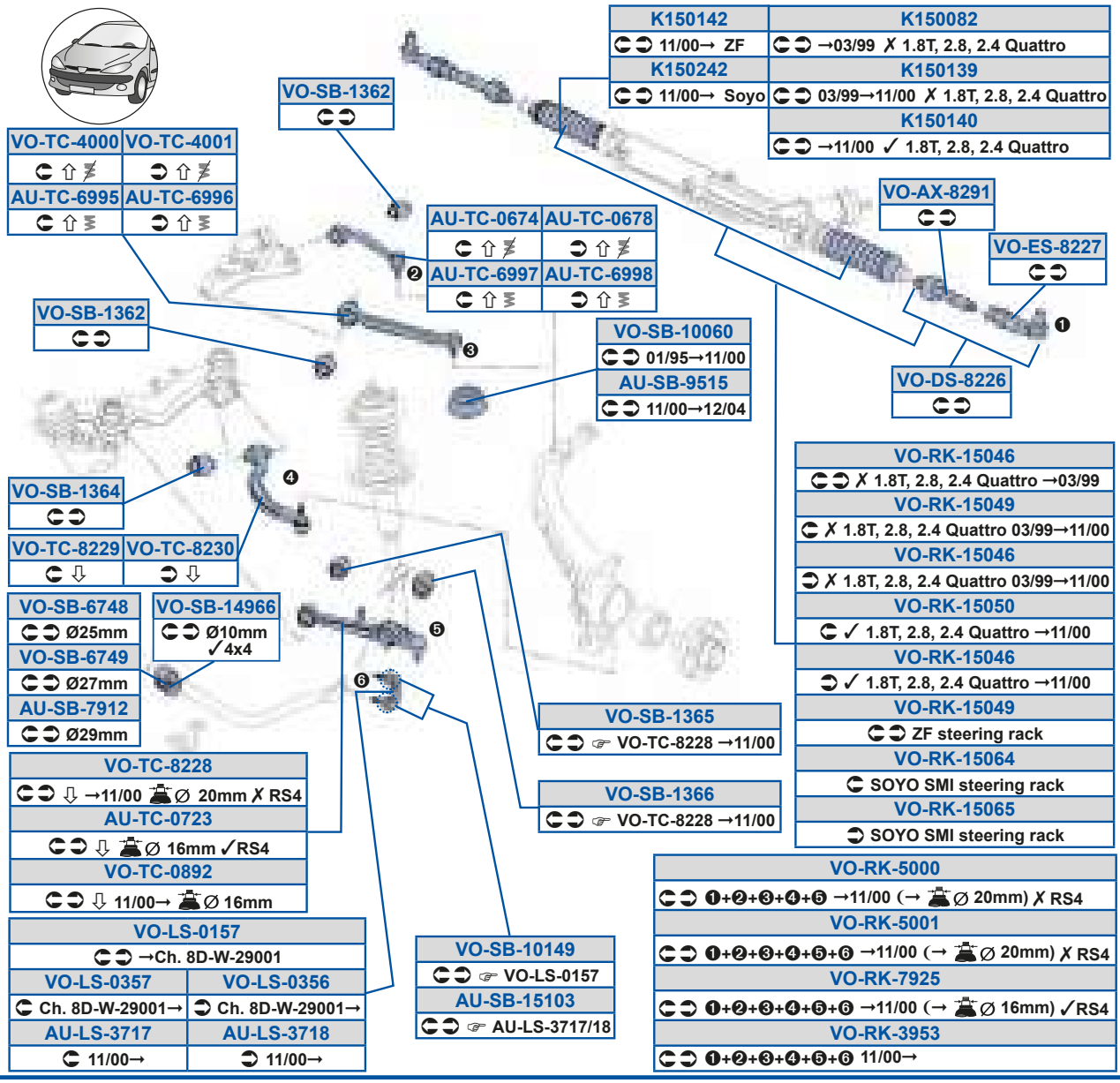

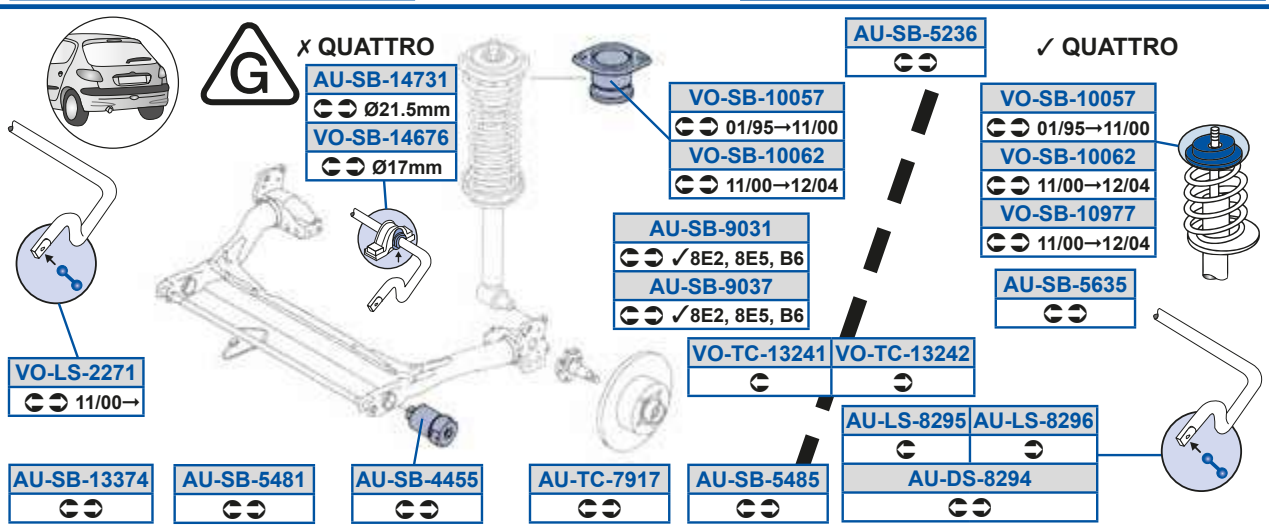

Of RW

MOOG

Of 5Rd5F>GB
FR7C78CA7

Of 5dP5BBCC
FR7C78CB8R

Of 5dP5GC9C
BR7B89ADG03FS7B89AEE

Of 5eQ5EG9E
FS7C78C9GU3FS7C78C9GY

Of 5Zd5AE9E
FS7B88A8E

Of 5dP5C>AD
FS7C7C97AR

Of 5eQ58DEB
BR7B7EC7GX3BR7B7EC7GY

Y9C88F>
BR7B8GFA8P3BR7B8GFA8R

Of 5Zd5AE9F
FS7B88A8F

Of 5dP5CBF9
FS7C78CAEa

Of 5eQ58DEF
BR7B7EC87X3BR7B7EC87Y

Y9C89AG
BR7B8GFA8P3BR7B8GFA8R

Of 5Zd5F>GC
F07C7CBDCQ3FR7C7CBDC

Of 5dP5CBFC
FS7C78CAFT

Of 5eQ58E>A
BPAB7E8C803BPAB7E8C8Q

Y9C89B8
BR7B8GFA803BR7B8GFA8P

Of 5Zd5F>GD
F07C7CBDDQ3FR7C7CBDD

Of 5dP5CDAC
FS7CGG9CEY

Of 5eQ5DGGC
FS7B7EC7C03FS7B7EC7CQ

Y9C89B>
BR7B8GFA8Y3DS7B8GFA8

Of 5dP59AAEB
BP7C88A9E

Of 5dP5EG9>
BR7B88A9EX

Of 5eQ5DGGD
FS7B7EC7D03FS7B7EC7DQ

Y9C8>B>
FS7B8GFA80

Of 5dP59BEA9
FS7C88A9ER

Of 5dP5G8A9
FS7C7C8BC0n

Of 5eQ5DGGE
FS7B7EC7G03FS7B7EC7GQ

g_ 5Oi 5F>G9
BR7B8GF78P /40

Of 5dP59C98A
FS7B88A8E /40

Of 5dP5G8AE
FS7C7C8BC0i

Of 5eQ5DGGF
FS7B7EC87O3FS7B7EC87Q

g_ 5Rd5F>>D
BP7B8GF78P3BP7B8GF78S

Of RW

OB 0FR; 4PC1	997GB 8G789	OB 0FS; 4PD1	99788 9; 78B
OB 0 t 0FRC4PC1	997GB 8G789	OB 0 t 0FSC4PD1	8B789 9; 78B
OB Q x áu x 0FVE4PD4FVS4PE1	8B78; 8A78G		

OB 0FL 997>88B1 IFR4FS4FV4PC4PDn

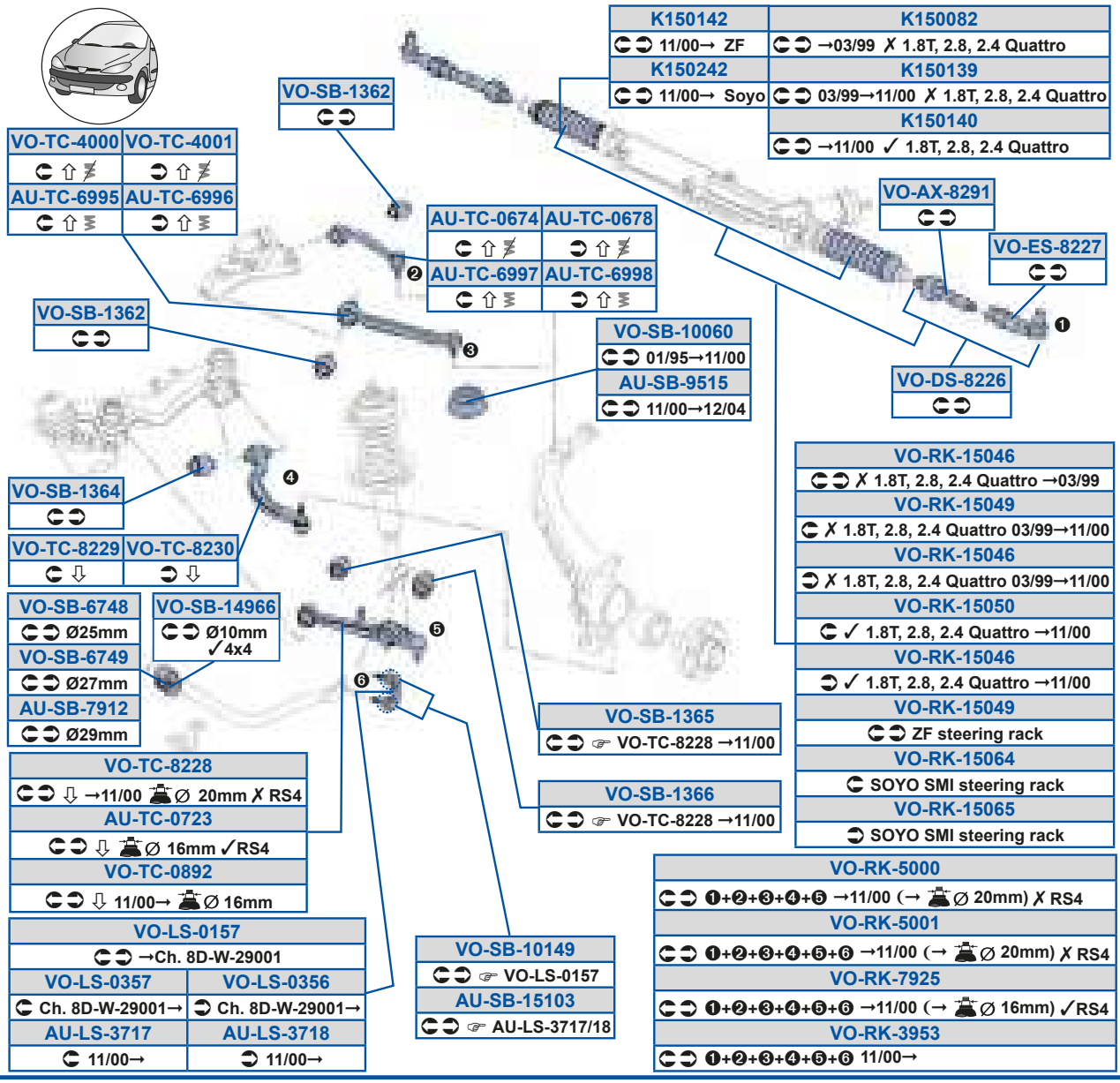

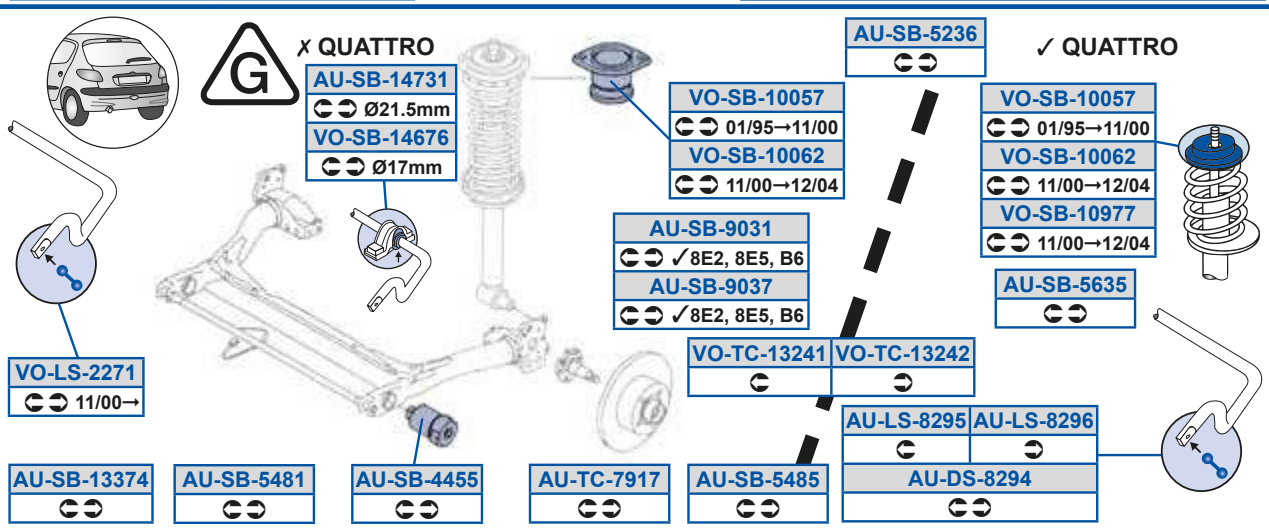

Of RW

MOOG

g_ 5Sd5F>>E
BP7B8GF88P3BP7B8GF88Q

g_ 5Zd589CE
BR7B88A8ER3BR7B88A8EU

g_ 5Zd58ACD
FR7B88A8FR

g_ 5Zd58ACE
FR7B88A8ER

g_ 5Zd5>>E9
FS7C7CBDC0Q3FS7C7CBDC0T

g_ 5cY59C8BD
BR7B8GF78P /40

g_ 5cY59C8BG
BR7B8GF78P /40

g_ 5cY59C8C8
BR7B8GF78P /40

g_ 5cY59C8DB
BR7B8GF78P /40

g_ 5cY59C8DC
BR7B8GF78P /40

g_ 5cY5AGCA

g_ 5cY5C888
FR7BGFGGF

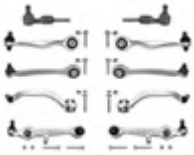

g_ 5cY5C889
FR7BGFGGFo8

g_ 5cY5EG>C
BPABGFGGF

g_ 5dP5988CE
8G8C8988G3A98C8988E

g_ 5dP5988D8
BR7B89AEET3B EDGFC7E

g_ 5dP5988D>
FSe C8AACAP3FSe C8AACAR

g_ 5dP5989BG
FR7B88A8ER /40

g_ 5dP598GEE
BT74C8A4ACA03BT74C8A4ACAP

g_ 5dP59AD>
BP7B7EC8C3BR7B7EC8CQ

g_ 5dP59ADB
BR7B7E8FA0P3BR7B7E8FA0Q

g_ 5dP59ADC
BR7B7E8F9S3BR7B7E8F9U

g_ 5dP59ADD
BR7B7E8F8T3BR7B7E8F8V

g_ 5dP59BDED
FS7C88A9E0

g_ 5dP59BGDD
FR7C88A9EQ

g_ 5dP5DEBF
BR7B88A9ES3BR7B88A9EU

g_ 5dP5DEBG
BR7B88A9ET3BR7B88A9EV

g_ 5eQ58FG>
FS7B7E8C8S3FS7B7E8C8Y

g_ 5eQ59A>B9
An7C7CA9A3FS7C7CA9Aa

g_ 5eQ59A>B>
An7C7CA9B3FS7C7CA9Ba

g_ 5eQ5B888
FR7B7EC7C03FR7B7EC7CP

g_ 5eQ5B889
FR7B7EC7D03FR7B7EC7DP

Of RW

OB 0FR; 4PC1	997GB 8G789	OB 0FS; 4PD1	99788 9; 78B
OB 0 t 0FRC4PC1	997GB 8G789	OB 0 t 0FSC4PD1	8B789 9; 78B
OB Q x áu x 0FVE4PD4FVS4PE1	8B78; 8A78G		

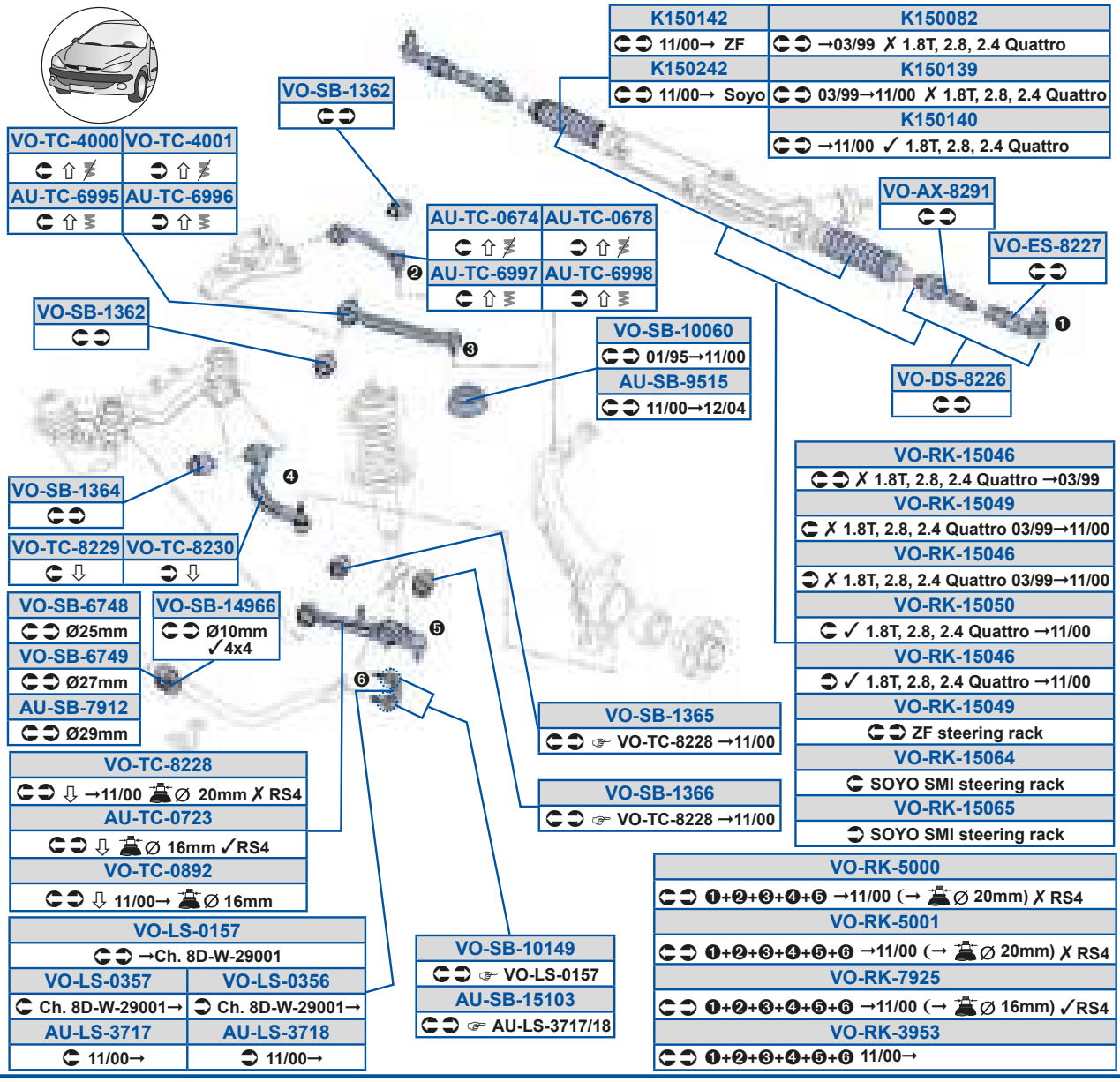

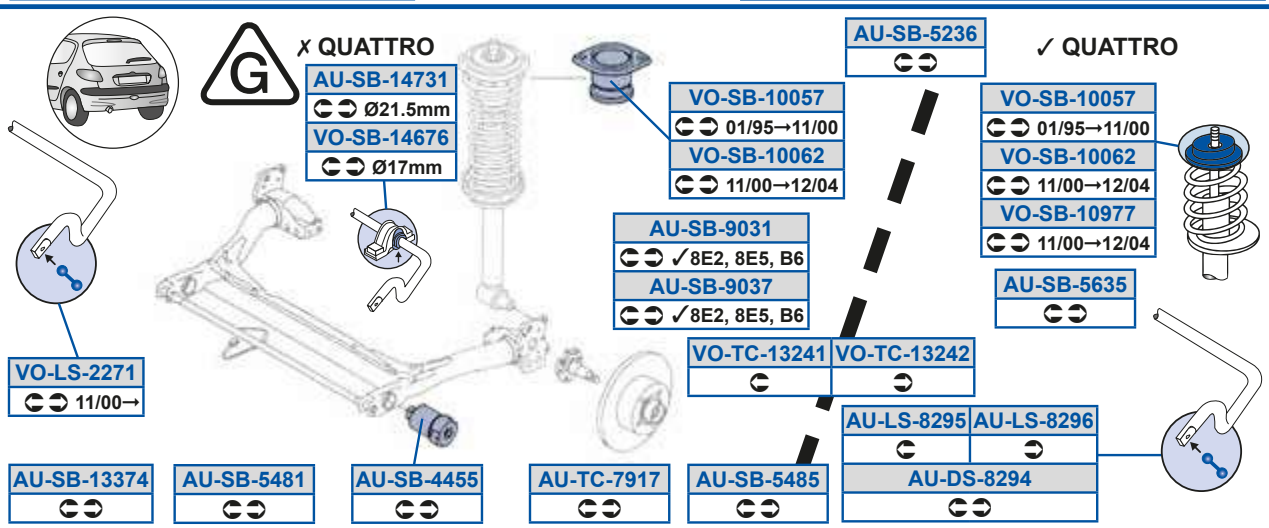

MOOG

g_ 5eQ5F>>F

BR7B7E8C8O3BR7B7E8C8P

g_ 5eQ5F>>G

BR7B7EDGAOQ3BR7B7EDGAOR

g_ 5eQ5F>A8

BR7B7EDGBOQ3BR7B7EDGBOR

OB 0997>88B5L >88E1IFSQ4FSRn

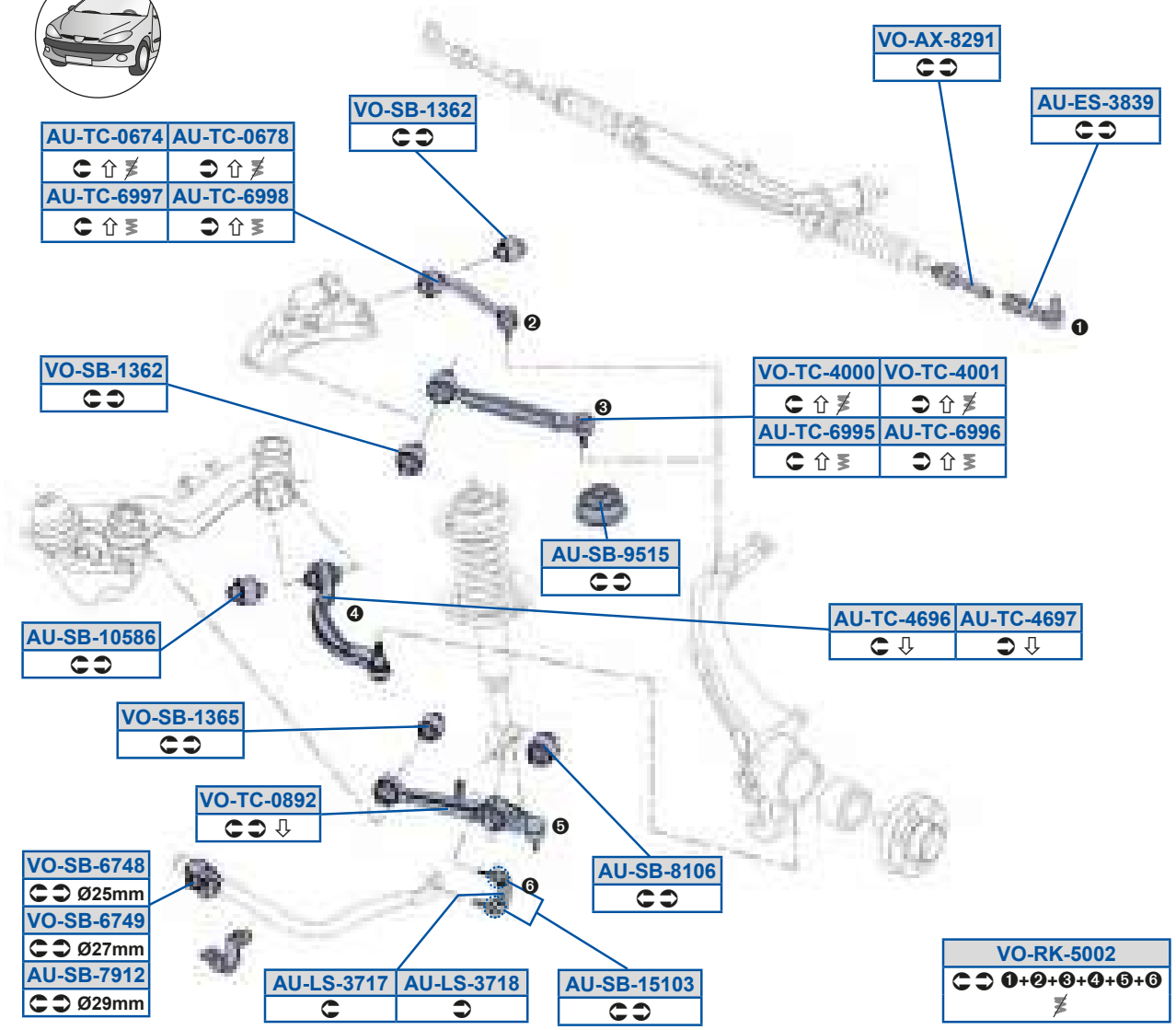

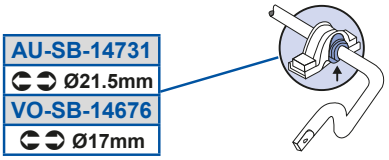

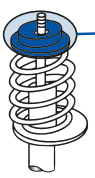

VO-SB-10062

VO-SB-10977

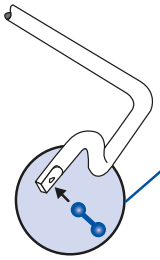

AU-LS-3898

AU-SB-5635

Of RW

MOOG

Of 5Sd5AFAG
BP7B8GF88U3BR7B8GF88X

Of 5dP5EG9>
BR7B88A9EX

Of 5eQ5DGGD
FS7B7EC7D03FS7B7EC7DQ

g_ 5dP59ADC
BR7B7E8F9S3BR7B7E8F9U

Of 5Zd5AE9E
FS7B88A8E

Of 5dP5F98D
FS7B7E8F8P3FS7B7E8F8Q

Of 5eQ5DGGE
FS7B7EC7G03FS7B7EC7GQ

g_ 5dP59BDED
FS7C88A9E0

Of 5Zd5AE9F
FS7B88A8F

Of 5dP5GC9C
BR7B89ADG03FS7B89AEE

Of 5eQ5DGGF
FS7B7EC8703FS7B7EC87Q

g_ 5dP5DEBF
BR7B88A9ES3BR7B88A9EU

Of 5Zd5AFGF
BS7C7CBDCU3FS7C7CBDCS

Of 5eQ58DEB
BR7B7EC7GX3BR7B7EC7GY

g_ 5Oi 5F>G9
BR7B8GF78P /40

g_ 5dP5DEBG
BR7B88A9ET3BR7B88A9EV

Of 5dP598CFD
BT7B7E8FAQ3BT7B7E8FAS

Of 5eQ58DEF
BR7B7EC87X3BR7B7EC87Y

g_ 5cY5C88>
FS7B7E8C8no9

g_ 5eQ58FG>
FS7B7E8C8S3FS7B7E8C8Y

Of 5dP59BEA9
FS7C88A9ER

Of 5eQ5BDGD
FS7B7EDGA003FS7B7EDGA0Q

g_ 5dP5988D>
FSe C8AACAP3FSe C8AACAR

g_ 5eQ5B888
FR7B7EC7C03FR7B7EC7CP

Of 5dP59C98A
FS7B88A8E /40

Of 5eQ5BDGE
FS7B7EDGB003FS7B7EDGB0Q

g_ 5dP598GEE
BT74C8A4ACA03BT74C8A4ACAP

g_ 5eQ5B889
FR7B7EC7D03FR7B7EC7DP

Of 5dP5CDAC
FS7CGG9CEY

Of 5eQ5DGGC
FS7B7EC7C03FS7B7EC7CQ

g_ 5dP59AD>
BP7B7EC8C3BR7B7EC8CQ

Of RW

OB 0FY; 4PF1	9978E	OB 0 t w0FYV4PF1	8B78G 8C79D
OB 0 t 0FYC4PF1	9978E		

OB 0>88F 5L1IFY pn

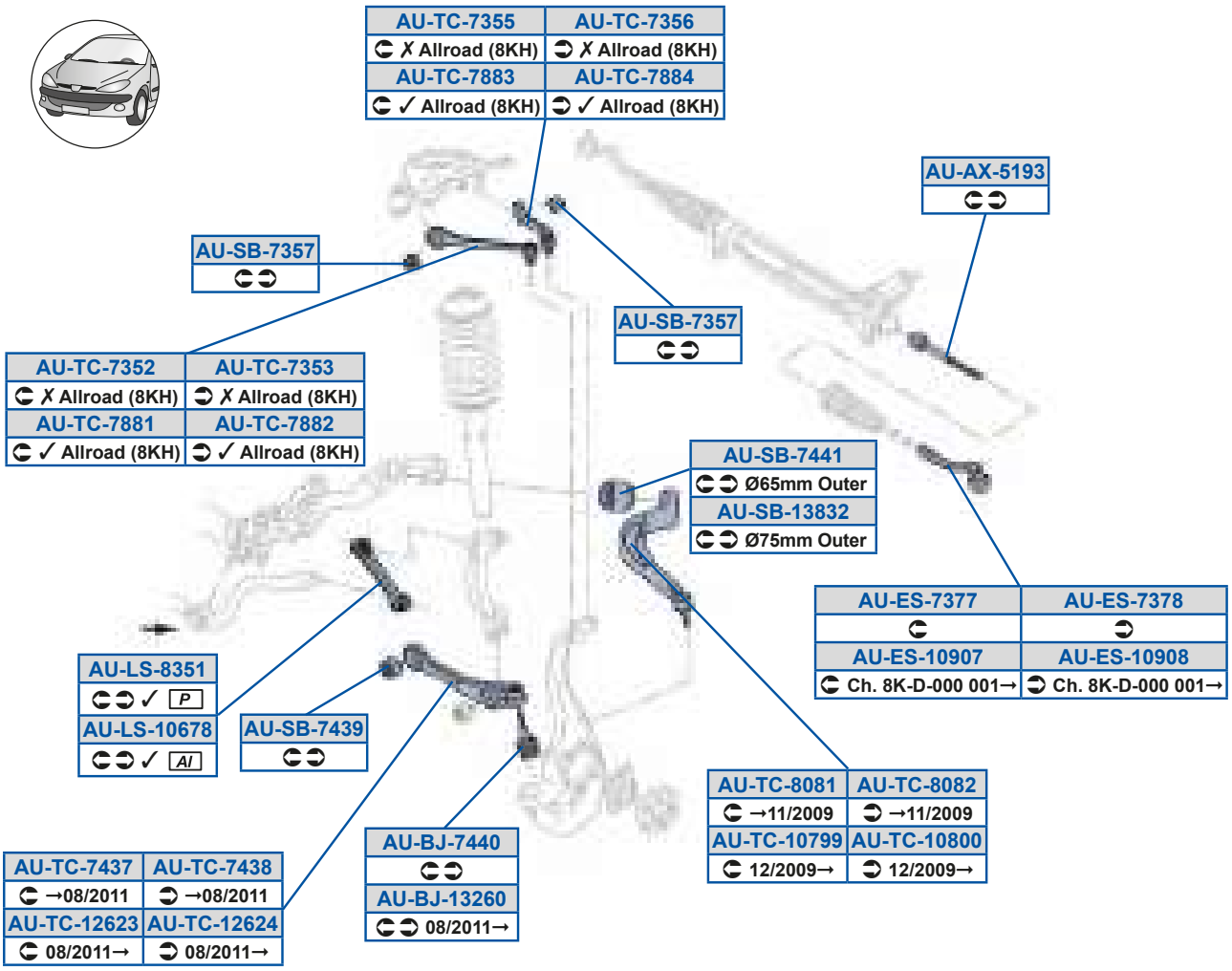

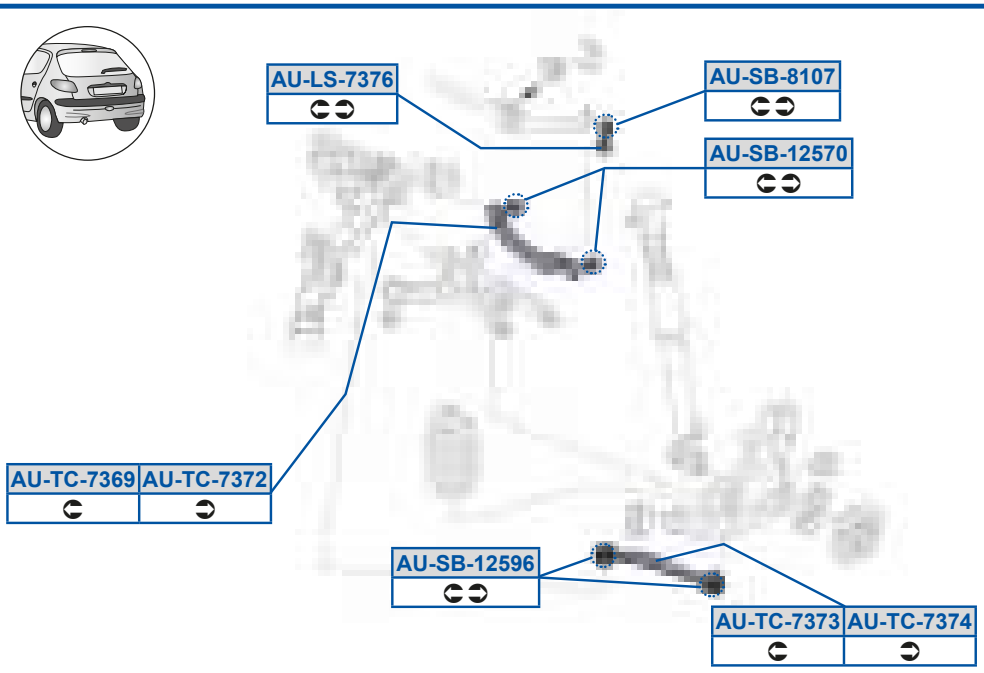

Of RW

MOOG

Of 5Oi 5C9GA
BV7B99F873BV7B99F87O

Of 5Zd5EAED
FY7C7CBDCS3FY7C7CBDCU

Of 5dP5F98E
FY7C7CBDCS /40

Of 5eQ5EACD
FY7B7EC8703FY7B7EC87d

Of 5PX59A>D8
BU7B7EDFG03BU7B7EDFGQ

Of 5Zd5FAC9
BV7B88A8E03BV7B88A8EQ

Of 5eQ598EGG
FY7B7EDGAo3FY7B7EDGAt

Of 5eQ5EADG
FY7C7CA9AR3FY7C7CA9AT

Of 5PX5EBB8
FY7B7EDFGR3FY7B7EDFGS

Of 5dP59>CE8
FY7C78CB83FY7C7CA9AT /40

Of 5eQ598F88
FY7B7EDGBo3FY7B7EDGBt

Of 5eQ5EAE>
FY7C7CA9BR3FY7C7CA9BT

Of 5Sd598G8E
BU7B9AF88O3FY7B99F8EO

Of 5dP59>CGD
FY7C78C9GY /40

Of 5eQ59>D>A
FY7B7E8C8T3FY7B7E8C8U

Of 5eQ5EAEA
FY7C78C9GY3FY7C78C9Gd

Of 5Sd598G8F
BU7B9AF89O

Of 5dP59AFA>
FY7B7E8FAR

Of 5eQ59>D>B
FY7B7E8C9T3FY7B7E8C9U

Of 5eQ5EAEB
FY7C78CA7Y3FY7C78CA7d

Of 5Sd5EAEE
FY7B99F8E03FY7B99F8EP

Of 5dP5EACE
FY7B7EC8C

Of 5eQ5EAC>
FY7B7EC7C03FY7B7EC7Cd

Of 5eQ5EBAE
FY7B7E8C8P3FY7B7E8C8Q

Of 5Sd5EAEF
BU7B9AF89O3FY7B99F8FO

Of 5dP5EBAG
FY7B7E8F9O3FY7B7E8F9P

Of 5eQ5EACA
FY7B7EC7D03FY7B7EC7Dd

Of 5eQ5EBAF
FY7B7E8C9P3FY7B7E8C9Q

Of 5Zd598DEF
BV7B88A8EQ3Ba 7B88A8E

Of 5dP5EBB9
FY7B7E8FAO3FY7B7E8FAP

Of 5eQ5EACC
FY7B7EC7G03FY7B7EC7Gd

Of 5eQ5EFF9
FY7B7EC7CP3FY7B7EC7Ca

Of RW

OB 0FY; 4PF1	9978E	OB 0 t wOFYV4PF1	8B78G 8C79D
OB 0 t 0FYC4PF1	9978E		

OB 0-88F 5L1IFY pn

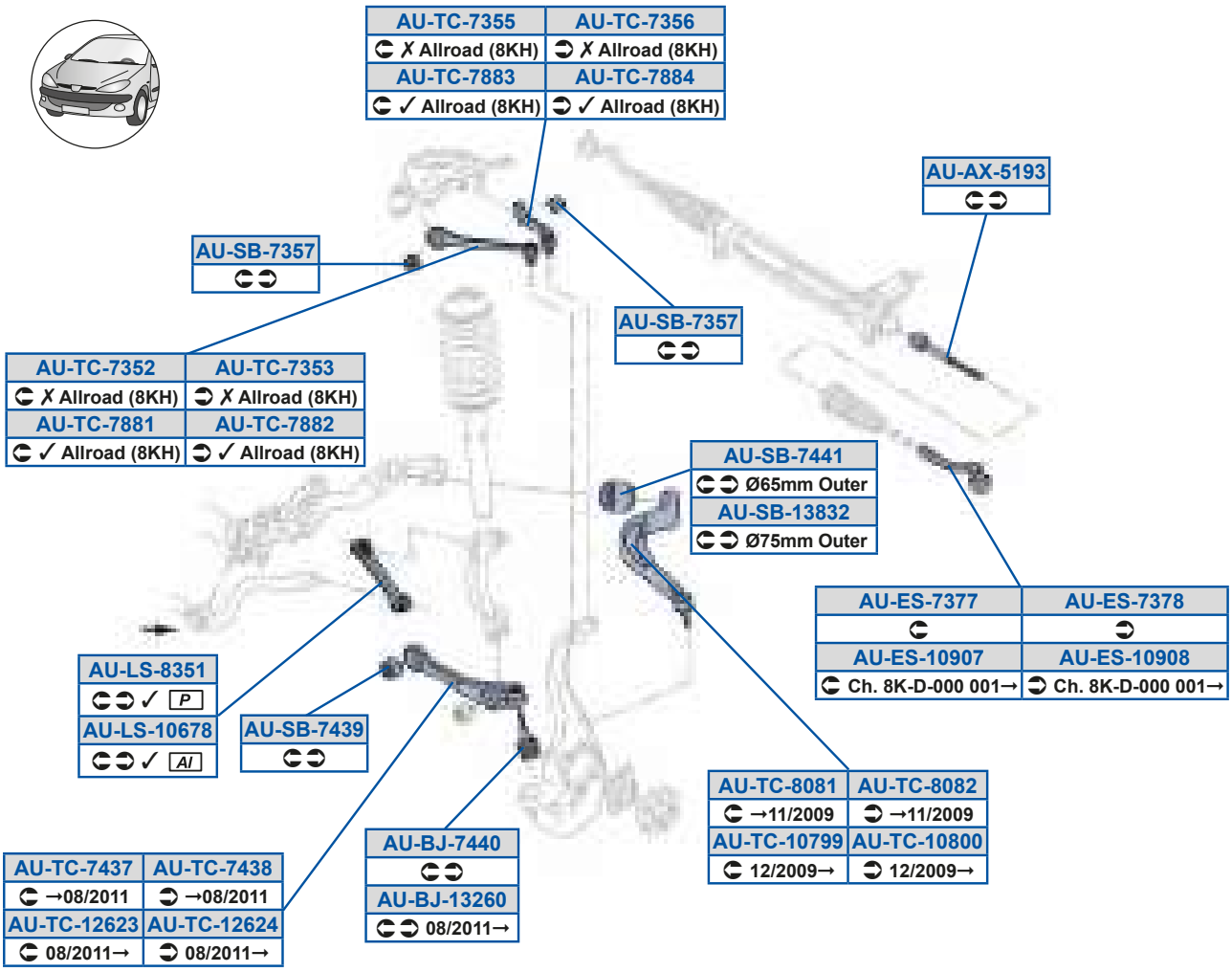

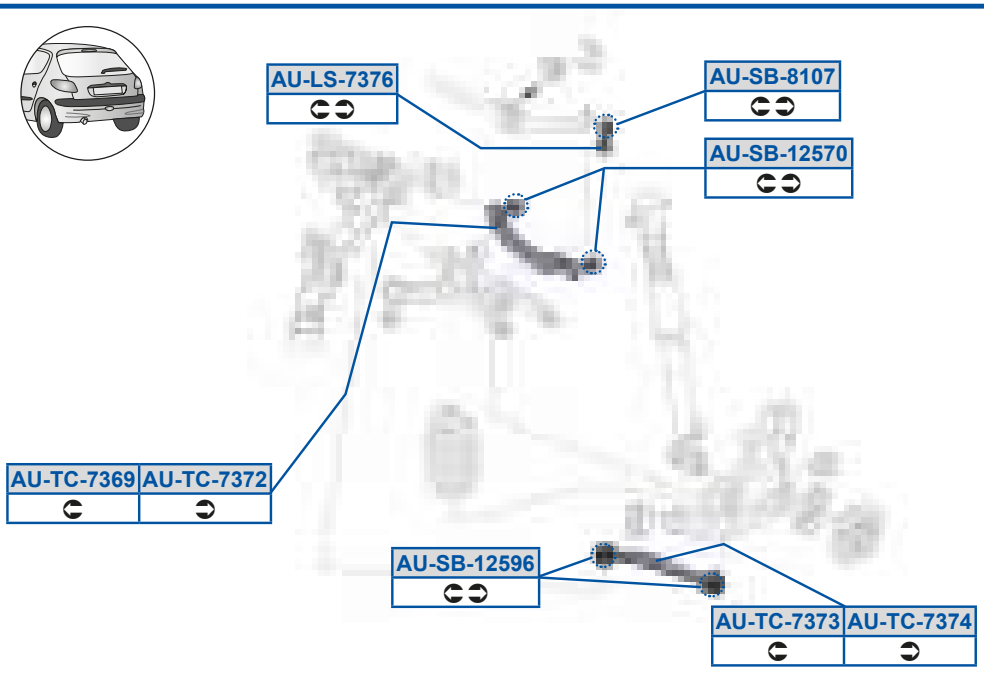

Of RW

MOOG

Of 5eQ5EFF>

FY7B7EC7DP3FY7B7EC7Da

Of 5eQ5EFFA

FY7B7EC7GP

Of 5eQ5EFFB

FY7B7EC87P

Of 5eQ5F8F9

FY7B7EDGAT3FY7B7EDGAY

Of 5eQ5F8F>

FY7B7EDGBT3FY7B7EDGBY

Of RW

OC 0FeA1	8D78E 8979E	OC Q x áu x 0FTE1	8A78G 8979E
OC d ut v 0Fe01	8G78G 8979E		

OC 0BD7>88E 5L1 IFeA4FeO4FTEn

AU-TC-7355	AU-TC-7356
✗ Convertible	✗ Convertible
AU-TC-7883	AU-TC-7884
✓ Convertible	✓ Convertible

AU-TC-7352	AU-TC-7353
✗ Convertible(8F7)	✗ Convertible(8F7)
AU-TC-7881	AU-TC-7882
✓ Convertible(8F7) →Ch. 8F-BN050 000	✓ Convertible(8F7) →Ch. 8F-BN050 000

AU-AX-5193

AU-SB-7357

AU-SB-7357

AU-SB-7441
Ø65mm Outer
AU-SB-13832
Ø75mm Outer

AU-ES-7377	AU-ES-7378
AU-ES-10907	AU-ES-10908
Ch. 8K-D-000 001→	Ch. 8K-D-000 001→

AU-SB-13386
Ø26mm

AU-LS-8351
P
AU-LS-10678
Al
AU-LS-8044
Al →09/2007

AU-SB-7439

AU-TC-8081	AU-TC-8082
→11/2009	→11/2009
AU-TC-10799	AU-TC-10800
12/2009→	12/2009→

AU-TC-7437	AU-TC-7438
→08/2011	→08/2011
AU-TC-12623	AU-TC-12624
08/2011→	08/2011→

AU-BJ-7440
AU-BJ-13260
08/2011→

AU-SB-13832

AU-LS-7376

AU-SB-8107

AU-SB-12570

AU-TC-7369	AU-TC-7372

AU-SB-12596

AU-TC-7373	AU-TC-7374

Of RW

MOOG

Of 5Oi 5C9GA
BV7B99F873BV7B99F87O

Of 5Zd5EAED
FY7C7CBDCS3FY7C7CBDCU

Of 5dP5EBAG
FY7B7E8F9O3FY7B7E8F9P

Of 5eQ5EACA
FY7B7EC7DO3FY7B7EC7Dd

Of 5PX59A>D8
BU7B7EDFGO3BU7B7EDFGQ

Of 5Zd5F8BB
FY7B88A8EP

Of 5dP5EBB9
FY7B7E8FAO3FY7B7E8FAP

Of 5eQ5EACC
FY7B7EC7GO3FY7B7EC7Gd

Of 5PX5EBB8
FY7B7EDFGR3FY7B7EDFGS

Of 5Zd5FAC9
BV7B88A8EO3BV7B88A8EQ

Of 5dP5F98E
FY7C7CBDCS /4O

Of 5eQ5EACD
FY7B7EC87O3FY7B7EC87d

Of 5Sd598G8E
BU7B9AF88O3FY7B99F8EO

Of 5dP59>CE8
FY7C78CB83FY7C7CA9AT /4O

Of 5eQ598EGG
FY7B7EDGAo3FY7B7EDGAt

Of 5eQ5EADG
FY7C7CA9AR3FY7C7CA9AT

Of 5Sd598G8F
BU7B9AF89O

Of 5dP59>CGD
FY7C78C9GY /4O

Of 5eQ598F88
FY7B7EDGBo3FY7B7EDGBt

Of 5eQ5EAE>
FY7C7CA9BR3FY7C7CA9BT

Of 5Sd5EAEE
FY7B99F8EO3FY7B99F8EP

Of 5dP59AAFD
FY7B88A9EP

Of 5eQ59>D>A
FY7B7E8C8T3FY7B7E8C8U

Of 5eQ5EAEA
FY7C78C9GY3FY7C78C9Gd

Of 5Sd5EAEF
BU7B9AF89O3FY7B99F8FO

Of 5dP59AFA>
FY7B7E8FAR

Of 5eQ59>D>B
FY7B7E8C9T3FY7B7E8C9U

Of 5eQ5EAEB
FY7C78CA7Y3FY7C78CA7d

Of 5Zd598DEF
BV7B88A8EQ3Ba 7B88A8E

Of 5dP5EACE
FY7B7EC8C

Of 5eQ5EAC>
FY7B7EC7CO3FY7B7EC7Cd

Of 5eQ5EBAE
FY7B7E8C8P3FY7B7E8C8Q

Of RW

OC 0FeA1	8D78E 8979E	OC Q x áu x 0FTE1	8A78G 8979E
OC d ut v 0Fe01	8G78G 8979E		

OC 0BD7>88E 5L1 IFeA4FeO4FTEn

AU-TC-7355	AU-TC-7356
✗ Convertible	✗ Convertible
AU-TC-7883	AU-TC-7884
✓ Convertible	✓ Convertible

AU-TC-7352	AU-TC-7353
✗ Convertible(8F7)	✗ Convertible(8F7)
AU-TC-7881	AU-TC-7882
✓ Convertible(8F7) →Ch. 8F-BN050 000	✓ Convertible(8F7) →Ch. 8F-BN050 000

AU-AX-5193

AU-SB-7357

AU-SB-7357

AU-SB-7441
Ø65mm Outer
AU-SB-13832
Ø75mm Outer

AU-ES-7377	AU-ES-7378
AU-ES-10907	AU-ES-10908
Ch. 8K-D-000 001→	Ch. 8K-D-000 001→

AU-SB-13386
Ø26mm

AU-LS-8351
P
AU-LS-10678
Al
AU-LS-8044
Al →09/2007

AU-SB-7439

AU-TC-8081	AU-TC-8082
→11/2009	→11/2009
AU-TC-10799	AU-TC-10800
12/2009→	12/2009→

AU-TC-7437	AU-TC-7438
→08/2011	→08/2011
AU-TC-12623	AU-TC-12624
08/2011→	08/2011→

AU-BJ-7440
AU-BJ-13260
08/2011→

AU-SB-13832

AU-LS-7376

AU-SB-8107

AU-SB-12570

AU-TC-7369	AU-TC-7372

AU-SB-12596

AU-TC-7373	AU-TC-7374

Of RW

MOOG

Of 5eQ5EBAF

FY7B7E8C9P3FY7B7E8C9Q

Of 5eQ5EFF9

FY7B7EC7CP3FY7B7EC7Ca

Of 5eQ5EFF>

FY7B7EC7DP3FY7B7EC7Da

Of 5eQ5EFFA

FY7B7EC7GP

Of 5eQ5EFFB

FY7B7EC87P

Of 5eQ5F8F9

FY7B7EDGAT3FY7B7EDGAY

Of 5eQ5F8F>

FY7B7EDGBT3FY7B7EDGBY

Of RW

OD 0B0; 4QB1	8D7GB 987GE	OD 0 t 0B04QB1	8D7GB 9; 7GE

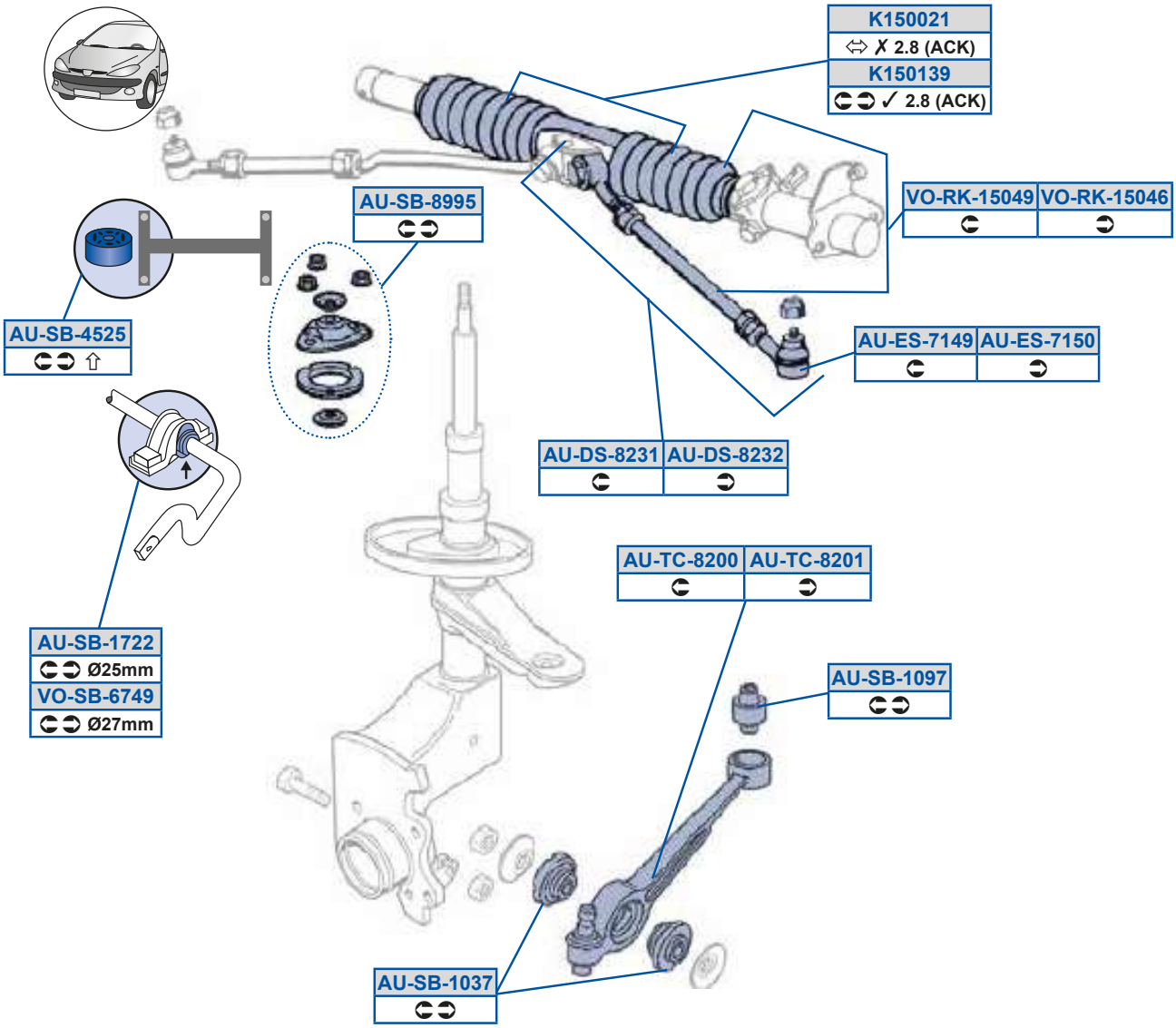

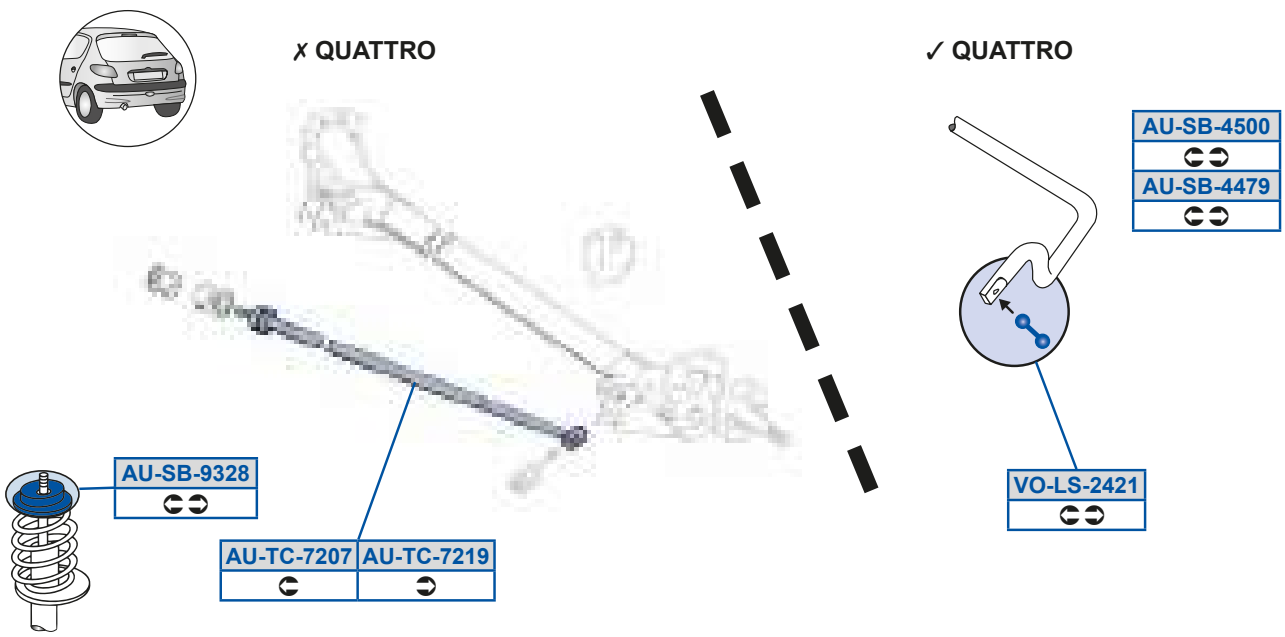

Of 5Rd5F>A9
BO7B8GF78O

Of 5dP5BC88
BO7C889BG

Y9C88>9
BA8B8GFA83F9AB8GFA8

Of 5Rd5F>A>
BO7B8GF79O

Of 5dP5BC>C
BO7AGGB8C3BO7AGGB8CP

Y9C89AG
BR7B8GFA8P3BR7B8GFA8R

Of 5Sd5E9BG
BAAB8GF88R3BBAB8GF88P

Of 5dP5FGGC
BO7B89AEEQo

g_ 5Zd5>B>9
BO7C7CAFG

Of 5Sd5E9C8
BAAB8GF89R3BBAB8GF89P

Of 5dP5GA>F
BBAC89AA8

g_ 5c Y59C8BD
BR7B8GF78P /40

Of 5dP598AE
BO7B7E8F83BO7B7E8F8O

Of 5eQ5E>8E
BBAC7CAC8i

g_ 5c Y59C8BG
BR7B8GF78P /40

Of 5dP598GE
BO7B7E8FAQ3BO7B7E8FAR

Of 5eQ5E>9G
BBAC7CAC9i

g_ 5dP5DEBG
BR7B88A9ET3BR7B88A9EV

Of 5dP59E>>
BO7B88A9E

Of 5eQ5F>88
BO7B7E8C8

Of 5dP5BBEG
BBAC88C9AP3BR7C88C9AO

Of 5eQ5F>89
BO7B7E8C9

Of RW

OD 0BP4QC1	897GE 8978C	OD 0 t 0BP4QC1	997GE 8978C

OD 09GGE 5L >88B1IBP4QCn

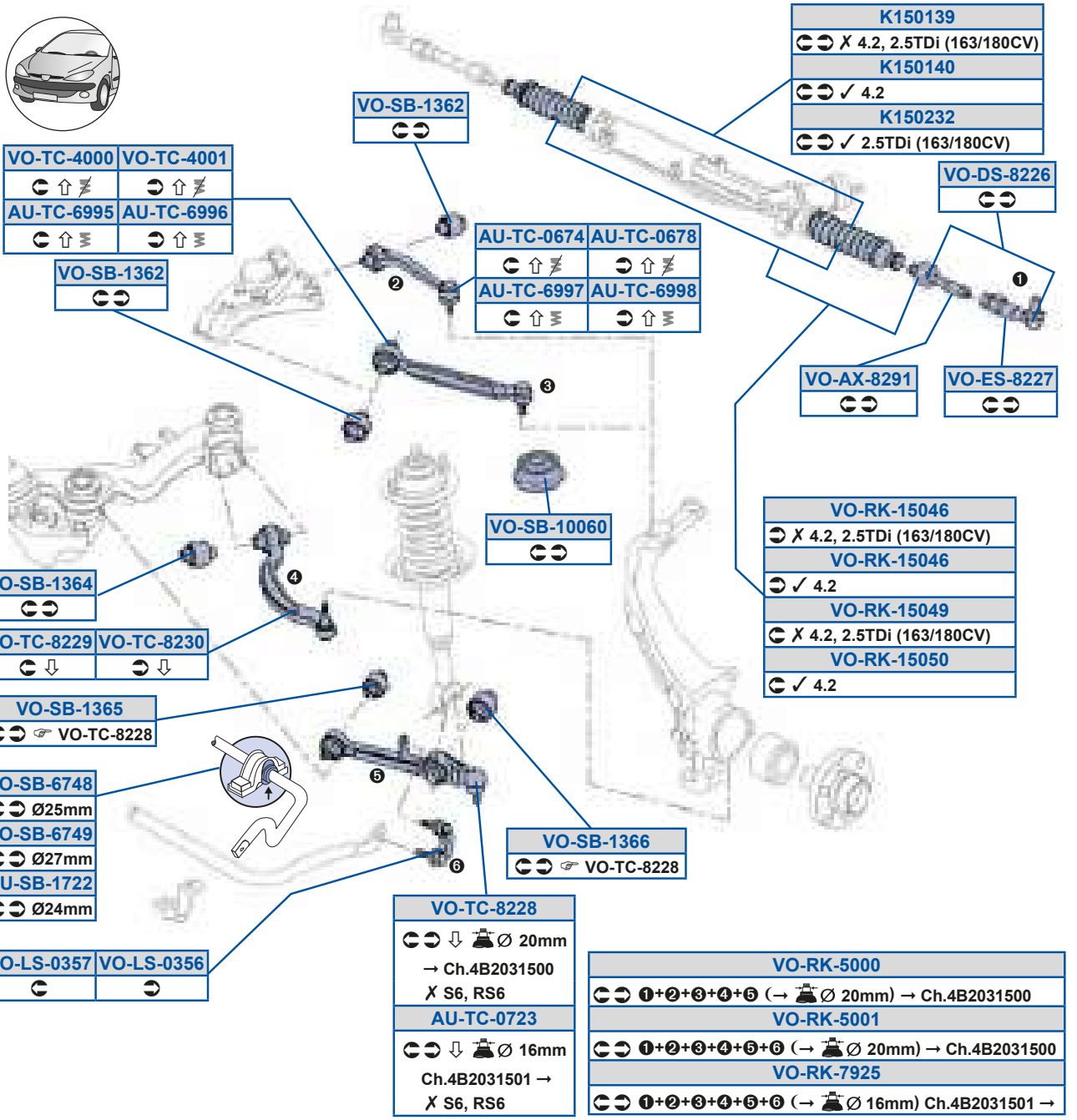

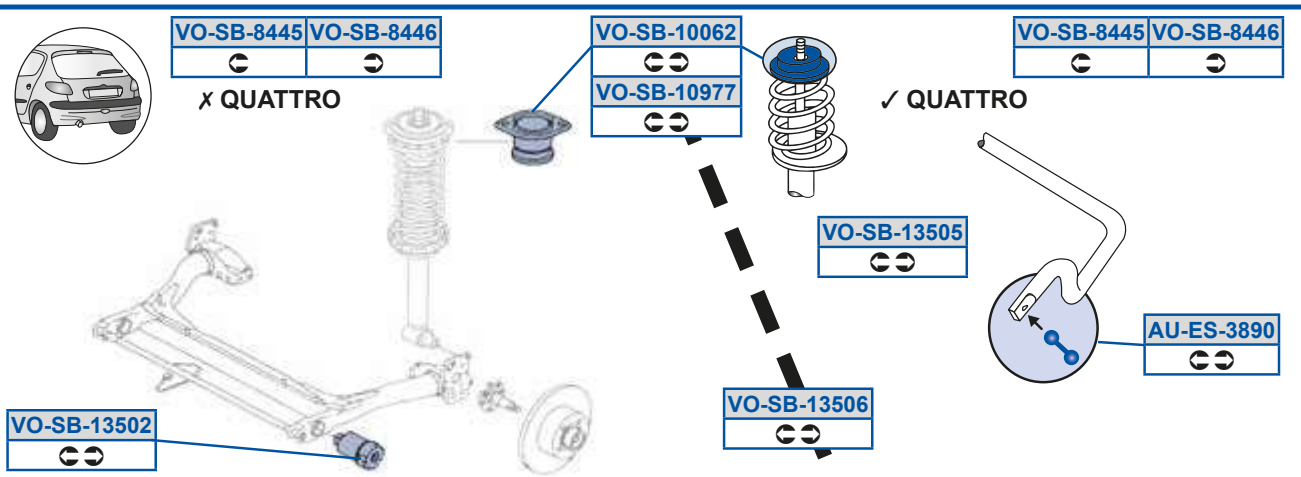

Of RW

MOOG

Of 5Sd5AFG8
FS7C7CBDCQ3FS7C7CBDCR

Of 5eQ5DGGF
FS7B7EC8703FS7B7EC87Q

g_ 5Zd58ACE
FR7B88A8ER

g_ 5dP5988D>
FSe C8AACAP3FSe C8AACAR

Of 5dP59E>>
B07B88A9E

Y9C89AG
BR7B8GFA8P3BR7B8GFA8R

g_ 5cY59C8BD
BR7B8GF78P /40

g_ 5dP598GEE
BT74C8A4ACA03BT74C8A4ACAP

Of 5eQ58DEB
BR7B7EC7GX3BR7B7EC7GY

Y9C89B8
BR7B8GFA803BR7B8GFA8P

g_ 5cY59C8BG
BR7B8GF78P /40

g_ 5dP59AC8>
FS7C7C8BCT3FS7C7C8BCa

Of 5eQ58DEF
BR7B7EC87X3BR7B7EC87Y

Y9C8>A>
BR7B8GFA8S3BR7B8GFA8Y

g_ 5cY59C8C8
BR7B8GF78P /40

g_ 5dP59AC8C
FS7C7C8FCQ

Of 5eQ58E>A
BPAB7E8C803BPAB7E8C8Q

g_ 5Oi 5F>G9
BR7B8GF78P /40

g_ 5cY5C888
FR7BGFGGF

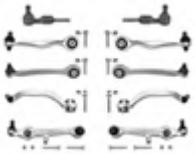

g_ 5dP59AC8D
FS7C7C8E90

Of 5eQ5DGGC
FS7B7EC7C03FS7B7EC7CQ

g_ 5Rd5F>>D
BP7B8GF78P3BP7B8GF78S

g_ 5cY5C889
FR7BGFGGFo8

g_ 5dP59AD>
BP7B7EC8C3BR7B7EC8CQ

Of 5eQ5DGGD
FS7B7EC7D03FS7B7EC7DQ

g_ 5Sd5F>>E
BP7B8GF88P3BP7B8GF88Q

g_ 5cY5EG>C
BPABGFGGF

g_ 5dP59ADB
BR7B7E8FA0P3BR7B7E8FA0Q

Of 5eQ5DGGE
FS7B7EC7G03FS7B7EC7GQ

g_ 5Zd58ACD
FR7B88A8FR

g_ 5dP5988D8
BR7B89AEET3B EDGFC7E

g_ 5dP59ADC
BR7B7E8F9S3BR7B7E8F9U

VO-TC-4000	VO-TC-4001
AU-TC-6995	**AU-TC-6996**

VO-SB-1362

VO-SB-1362

AU-TC-0674	AU-TC-0678
AU-TC-6997	**AU-TC-6998**

K150139
✗ 4.2, 2.5TDi (163/180CV)

K150140
✓ 4.2

K150232
✓ 2.5TDi (163/180CV)

VO-DS-8226

VO-AX-8291

VO-ES-8227

VO-SB-10060

VO-RK-15046
✗ 4.2, 2.5TDi (163/180CV)

VO-RK-15046
✓ 4.2

VO-RK-15049
✗ 4.2, 2.5TDi (163/180CV)

VO-RK-15050
✓ 4.2

VO-SB-1364

VO-TC-8229	VO-TC-8230

VO-SB-1365
VO-TC-8228

VO-SB-6748
Ø25mm

VO-SB-6749
Ø27mm

AU-SB-1722
Ø24mm

VO-SB-1366
VO-TC-8228

VO-TC-8228
Ø 20mm
→ Ch.4B2031500
✗ S6, RS6

AU-TC-0723
Ø 16mm
Ch.4B2031501 →
✗ S6, RS6

VO-LS-0357	VO-LS-0356

VO-RK-5000
❶+❷+❸+❹+❺ (→ Ø 20mm) → Ch.4B2031500

VO-RK-5001
❶+❷+❸+❹+❺+❻ (→ Ø 20mm) → Ch.4B2031500

VO-RK-7925
❶+❷+❸+❹+❺+❻ (→ Ø 16mm) Ch.4B2031501 →

VO-SB-8445	VO-SB-8446

✗ QUATTRO

VO-SB-10062

VO-SB-10977

VO-SB-8445	VO-SB-8446

✓ QUATTRO

VO-SB-13505

AU-ES-3890

VO-SB-13506

VO-SB-13502

g_ 5dP59ADD
BR7B7E8F8T3BR7B7E8F8V

g_ 5dP5DEBF
BR7B88A9ES3BR7B88A9EU

g_ 5dP5DEBG
BR7B88A9ET3BR7B88A9EV

g_ 5dP5FBBC
BP7C78C98S

g_ 5dP5FBBD
BP7C78C99S

g_ 5eQ5B888
FR7B7EC7C03FR7B7EC7CP

g_ 5eQ5B889
FR7B7EC7D03FR7B7EC7DP

g_ 5eQ5F>>F
BR7B7E8C803BR7B7E8C8P

g_ 5eQ5F>>G
BR7B7EDGA0Q3BR7B7EDGA0R

g_ 5eQ5F>A8
BR7B7EDGB0Q3BR7B7EDGB0R

Of RW

OD 0BT; 4QD1	8C78B 8A799	OD 0 t w0BTV4QD1	8C78D 8F799
OD 0 t 0BTC4QD1	8A78C 8F799		

OD 0-88B 5L>8991 I BT>4BTC4BTV n

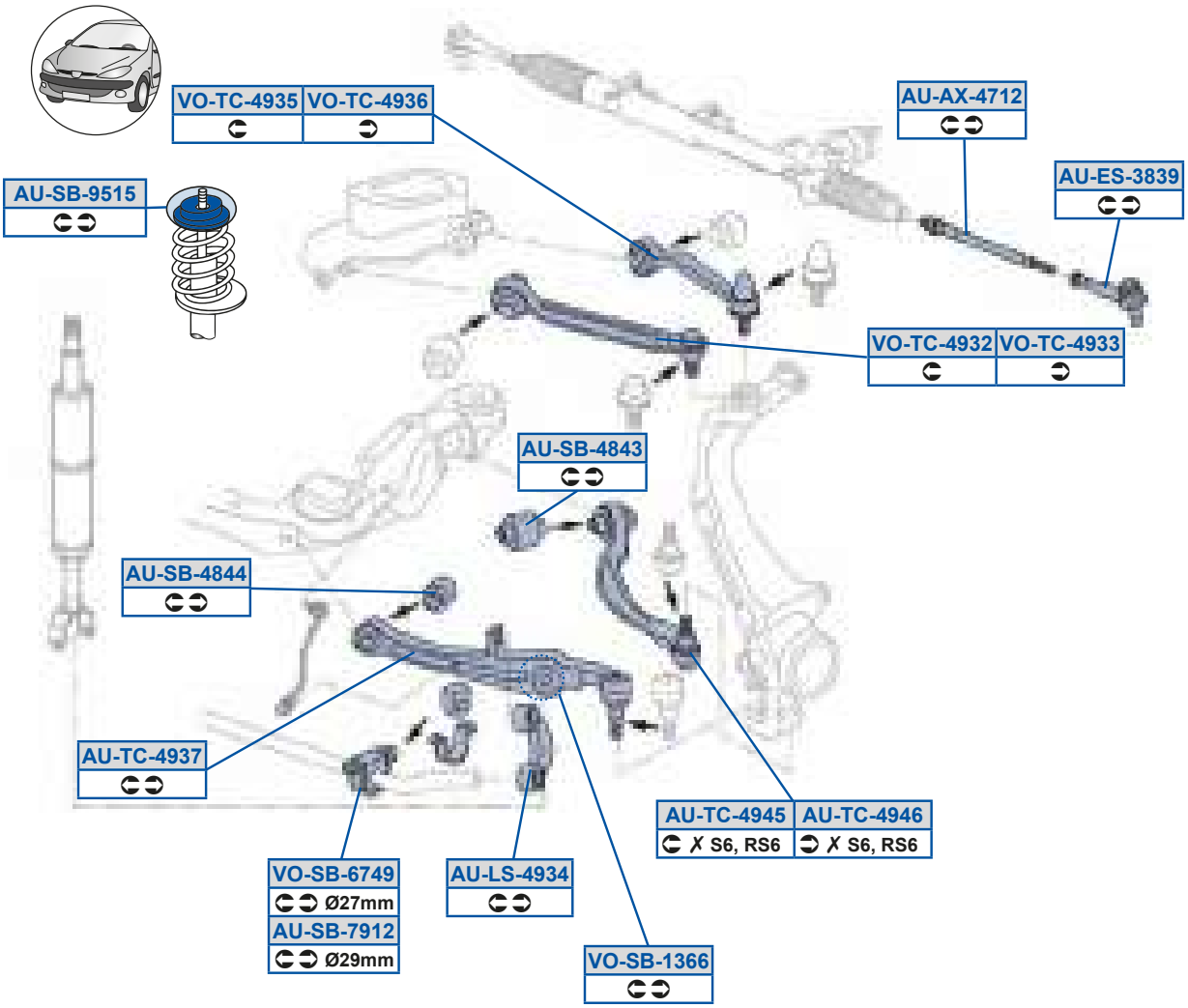

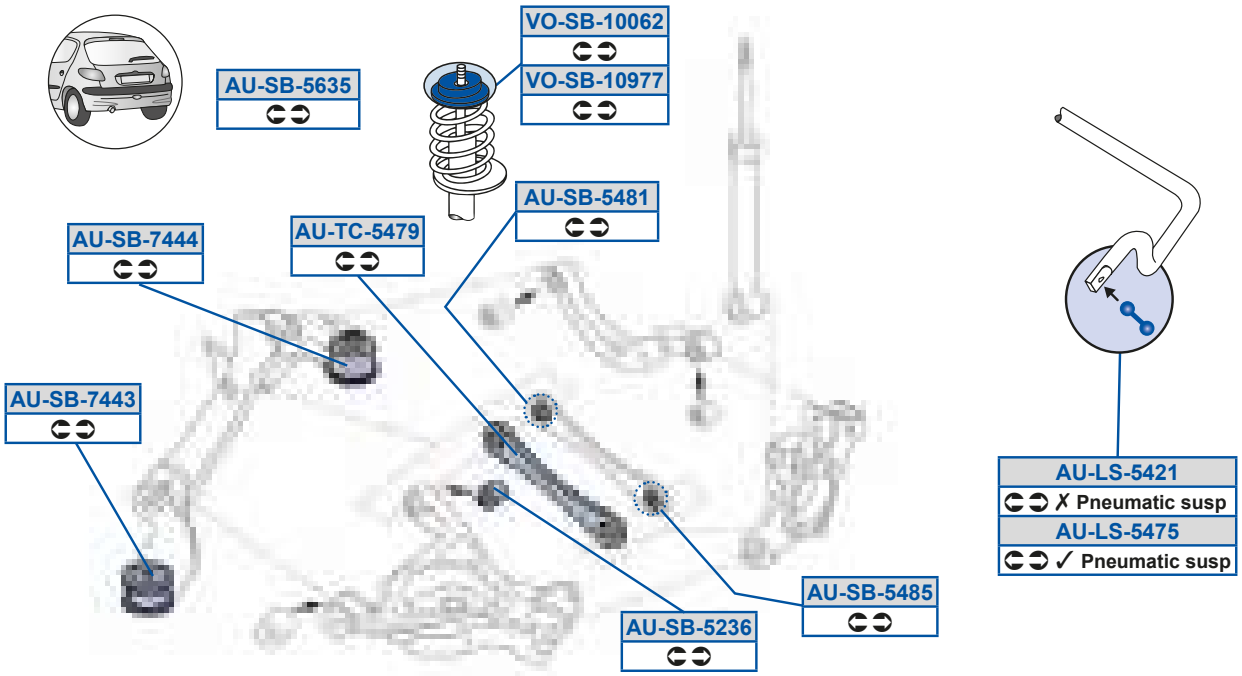

Of RW

MOOG

Of 5Oi 5BE9>
BT7B99F983BT7B99F98R

Of 5dP5CBF9
FS7C78CAEa

Of 5eQ5BGBC
BT7B7EDGA3BT7B7EDGAP

g_ 5eQ5BGAA
BS7B7EC7DP3BS7B7EC7DS

Of 5Sd5AFAG
BP7B8GF88U3BR7B8GF88X

Of 5dP5CBFC
FS7C78CAFT

Of 5eQ5BGBD
BT7B7EDGB3BT7B7EDGBP

g_ 5eQ5BGAC
BS7B7EC7GP3BS7B7EC7GS

Of 5Zd5BGAB
BS7B88A8ES

Of 5dP5CDAC
FS7CGG9CEY

Of 5eQ5CBEG
BT7C78C9GQ3BT7C78C9GS

g_ 5eQ5BGAD
BS7B7EC87P3BS7B7EC87S

Of 5Zd5CB>9
BT7C7CBDCd3BT7C7CBDCl

Of 5dP5EBBA
BT7 C7C 8BC

g_ 5dP5988D>
FSeC8AACAP3FSeC8AACAR

Of 5Zd5CBEC
BT7C7CBDCi

Of 5dP5EBBB
BT7C7C8BCO

g_ 5dP598GEE
BT74C8A4ACAO3BT74C8A4ACAP

Of 5dP5BFBA
BT7B7E8FAO3BT7B7E8FAS

Of 5dP5EG9>
BR7B88A9EX

g_ 5dP59ADD
BR7B7E8F8T3BR7B7E8F8V

Of 5dP5BFBB
BS7B7E8F9Q

Of 5dP5GC9C
BR7B89ADGO3FS7B89AEE

g_ 5dP5DEBG
BR7B88A9ET3BR7B88A9EV

Of 5dP5C>AD
FS7C7C97AR

Of 5eQ5BGAE
BT7B7E8C83BT7B7E8C8O

g_ 5eQ5BGA>
BS7B7EC7CP3BS7B7EC7CS

Of RW

OD 0BU; 4QE1	99798	OD 0 t w0BUV1	8979;
OD 0 t 0BUC4QE1	8C799		

OD0-898 5L1IBU>4BUC4BUVn

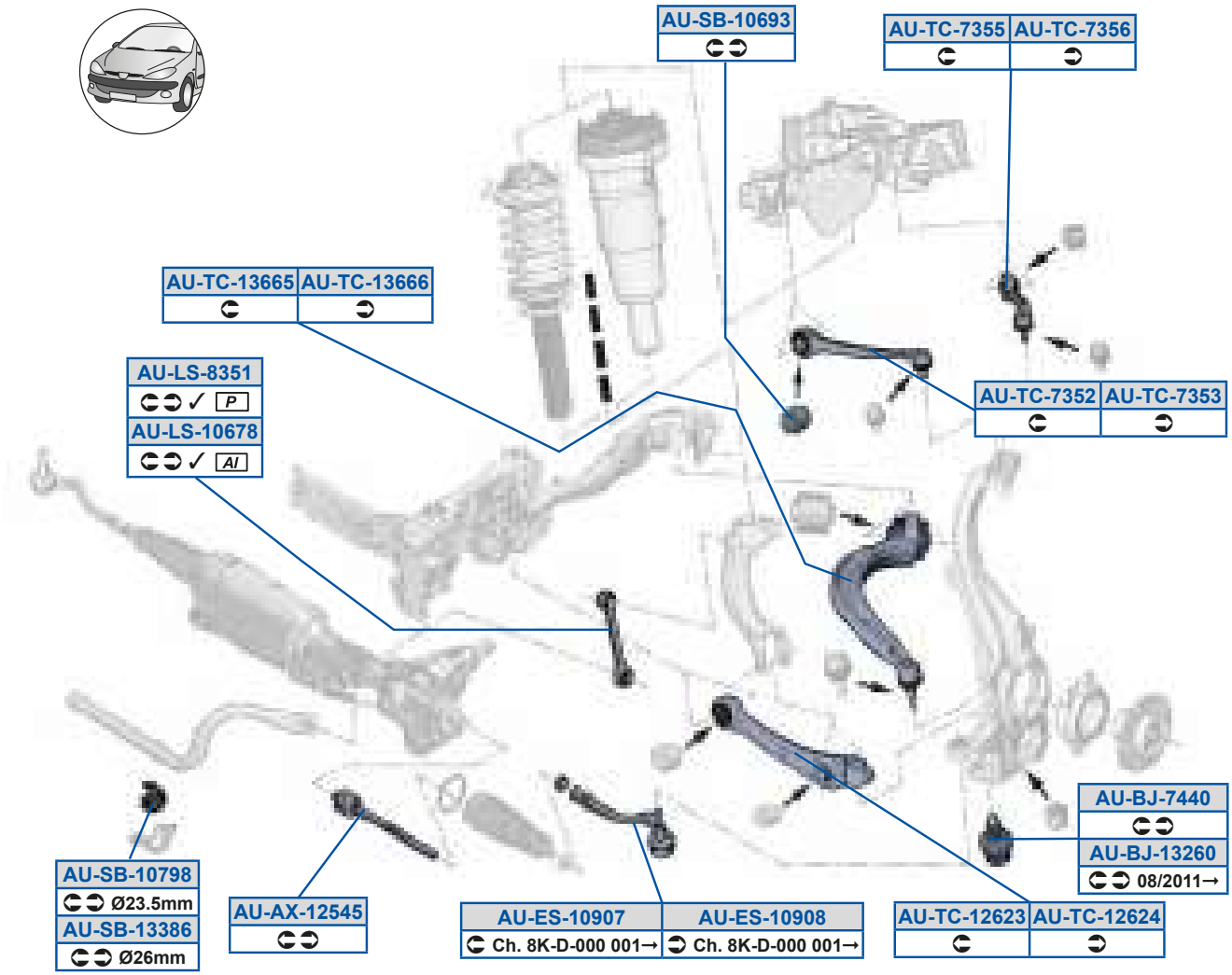

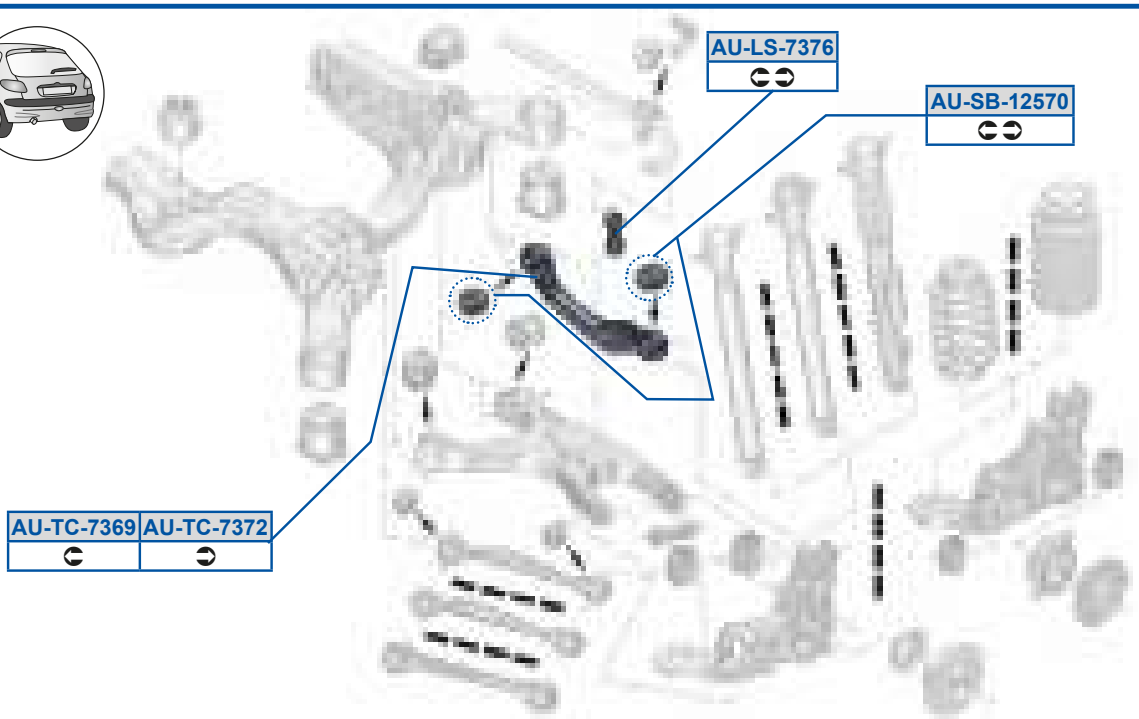

Of RW

MOOG

Of 5Oi 59>CBC
BU7B9AF873BU7B9AF87O

Of 5dP598DGA
BV7B7EC8B03BV7B7EC8C

Of 5eQ5EAC>
FY7B7EC7C03FY7B7EC7Cd

Of 5PX59A>D8
BU7B7EDFG03BU7B7EDFGQ

Of 5dP598EGF
FY7B88A9E0

Of 5eQ5EACA
FY7B7EC7D03FY7B7EC7Dd

Of 5PX5EBB8
FY7B7EDFGR3FY7B7EDFGS

Of 5dP59>CE8
FY7C78CB83FY7C7CA9AT /40

Of 5eQ5EACC
FY7B7EC7G03FY7B7EC7Gd

Of 5Sd598G8E
BU7B9AF8803FY7B99F8E0

Of 5dP59AAFD
FY7B88A9EP

Of 5eQ5EACD
FY7B7EC8703FY7B7EC87d

Of 5Sd598G8F
BU7B9AF89O

Of 5eQ59>D>A
FY7B7E8C8T3FY7B7E8C8U

Of 5eQ5EADG
FY7C7CA9AR3FY7C7CA9AT

Of 5Zd598DEF
BV7B88A8EQ3Ba 7B88A8E

Of 5eQ59>D>B
FY7B7E8C9T3FY7B7E8C9U

Of 5eQ5EAE>
FY7C7CA9BR3FY7C7CA9BT

Of 5Zd5EAED
FY7C7CBDCS3FY7C7CBDCU

Of 5eQ59ADDC
BU7 B7E DGA R

Of 5Zd5FAC9
BV7B88A8E03BV7B88A8EQ

Of 5eQ59ADDD
BU7 B7E DGB R

Of RW

OE d ut v 0BU01	98798	OE d ut v 0BU04BUT1	8G79;

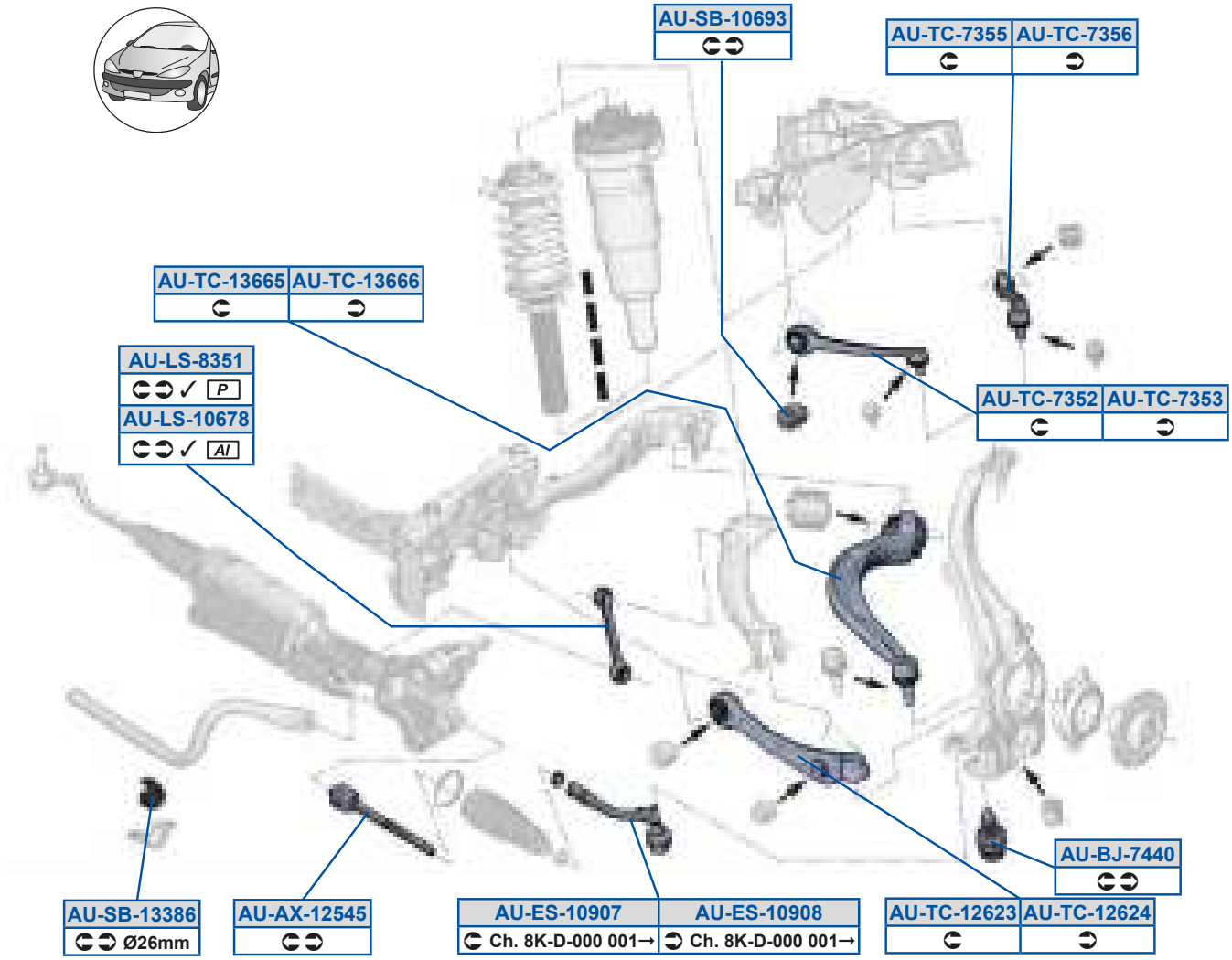

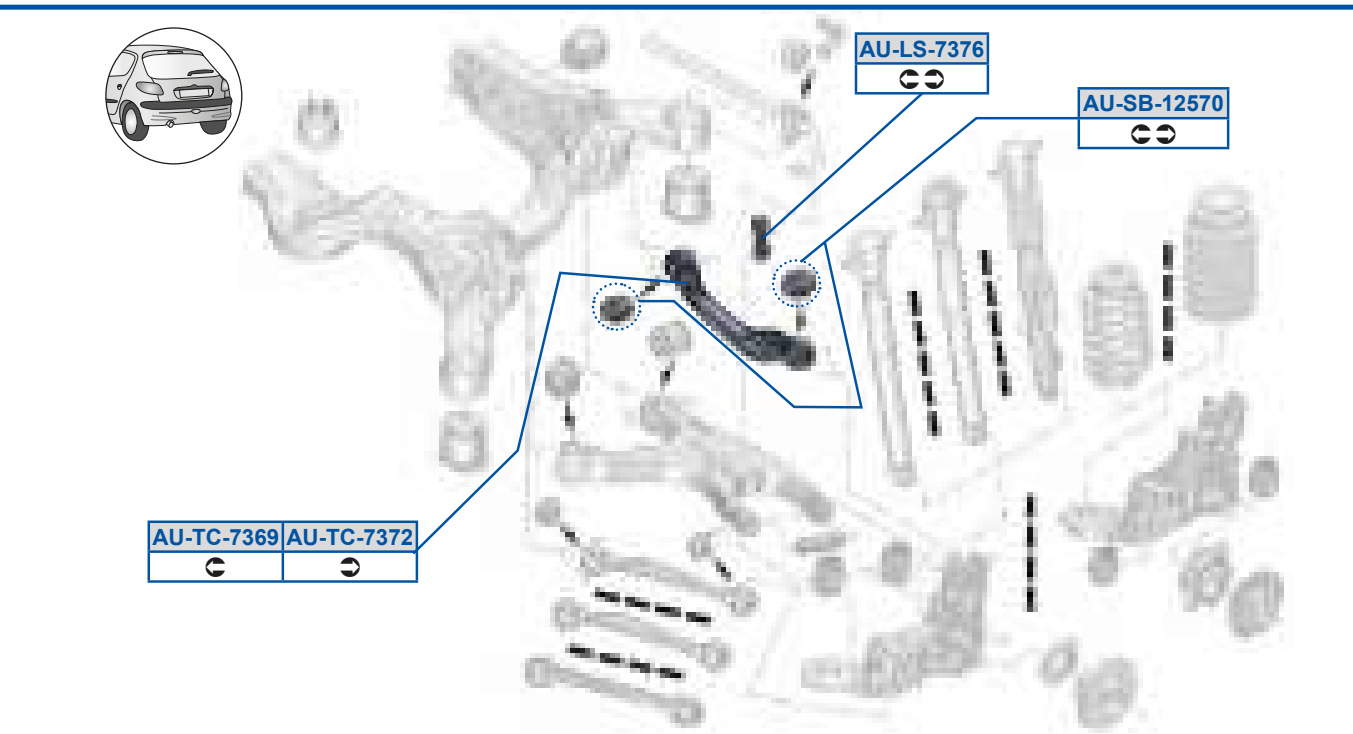

Of 5Oi 59>CBC
BU7B9AF873BU7B9AF87O

Of 5dP59>CE8
FY7C78CB83FY7C7CA9AT /40

Of 5eQ5EACC
FY7B7EC7GO3FY7B7EC7Gd

Of 5PX5EBB8
FY7B7EDFGR3FY7B7EDFGS

Of 5dP59AAFD
FY7B88A9EP

Of 5eQ5EACD
FY7B7EC87O3FY7B7EC87d

Of 5Sd598G8E
BU7B9AF88O3FY7B99F8EO

Of 5eQ59>D>A
FY7B7E8C8T3FY7B7E8C8U

Of 5eQ5EADG
FY7C7CA9AR3FY7C7CA9AT

Of 5Sd598G8F
BU7B9AF89O

Of 5eQ59>D>B
FY7B7E8C9T3FY7B7E8C9U

Of 5eQ5EAE>
FY7C7CA9BR3FY7C7CA9BT

Of 5Zd598DEF
BV7B88A8EQ3Ba 7B88A8E

Of 5eQ59ADDC
BU7 B7E DGA R

Of 5Zd5EAED
FY7C7CBDCS3FY7C7CBDCU

Of 5eQ59ADDD
BU7 B7E DGB R

Of 5Zd5FAC9
BV7B88A8EO3BV7B88A8EQ

Of 5eQ5EAC>
FY7B7EC7CO3FY7B7EC7Cd

Of 5dP598DGA
BV7B7EC8BO3BV7B7EC8C

Of 5eQ5EACA
FY7B7EC7DO3FY7B7EC7Dd

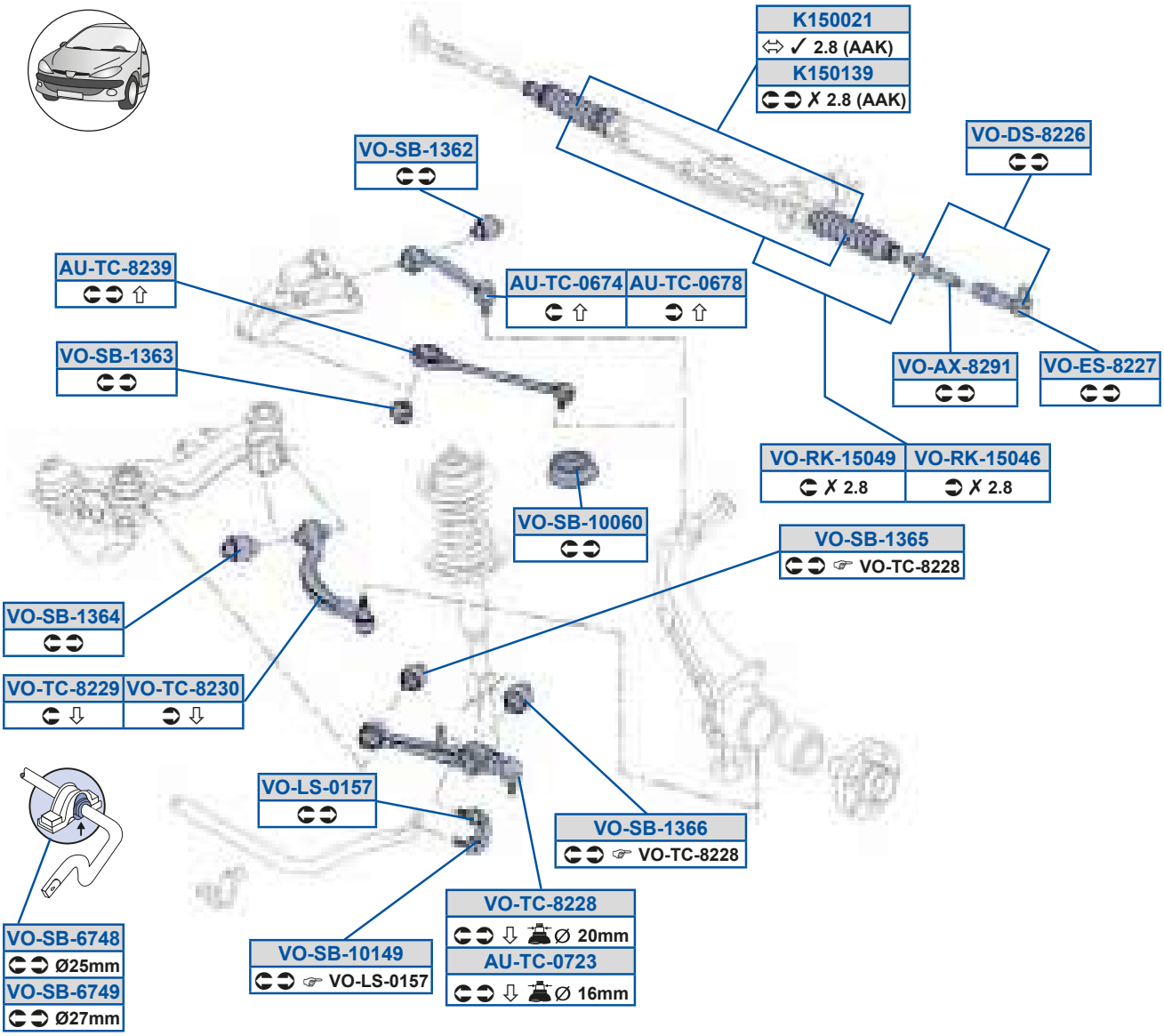
K150021
⇔ ✓ 2.8 (AAK)
K150139
✗ 2.8 (AAK)
VO-DS-8226
VO-SB-1362
AU-TC-8239 ⇧
AU-TC-0674
AU-TC-0678 ⇧
VO-SB-1363
VO-AX-8291
VO-ES-8227
VO-RK-15049
✗ 2.8
VO-RK-15046
✗ 2.8
VO-SB-10060
VO-SB-1365
VO-TC-8228
VO-SB-1364
VO-TC-8229 ⇩
VO-TC-8230 ⇩
VO-LS-0157
VO-SB-1366
VO-TC-8228
VO-SB-6748
Ø25mm
VO-SB-6749
Ø27mm
VO-SB-10149
VO-LS-0157
VO-TC-8228
⇩ Ø 20mm
AU-TC-0723
⇩ Ø 16mm

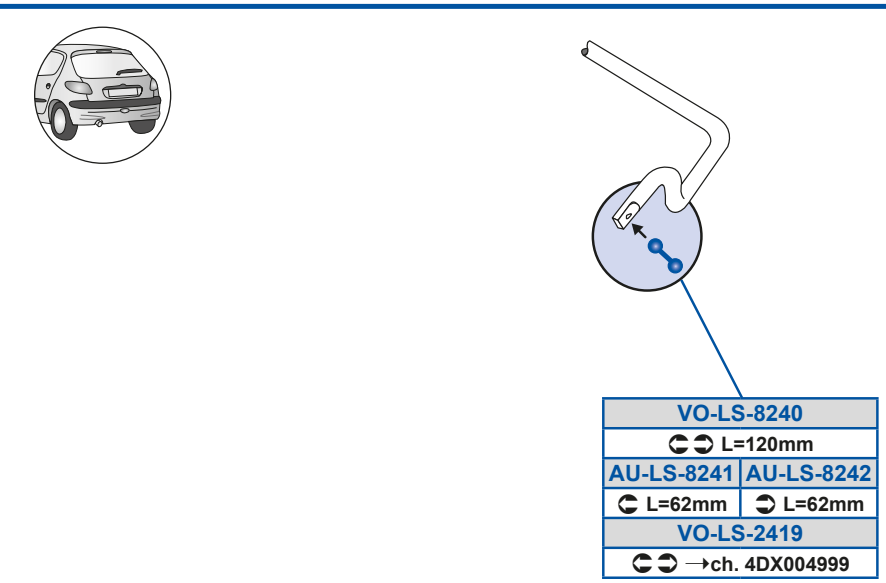
VO-LS-8240
L=120mm
AU-LS-8241
L=62mm
AU-LS-8242
L=62mm
VO-LS-2419
→ch. 4DX004999

MOOG

Of 5Zd5F>B9
BR7C7CCBEQ

g_ 5Oi 5F>G9
BR7B8GF78P /40

g_ 5dP5988D8
BR7B89AEET3B EDGFC7E

g_ 5dP5DEBG
BR7B88A9ET3BR7B88A9EV

Of 5Zd5F>B>
BR7C7CCBFQ

g_ 5Rd5F>>D
BP7B8GF78P3BP7B8GF78S

g_ 5dP5989BG
FR7B88A8ER /40

g_ 5eQ5F>>F
BR7B7E8C803BR7B7E8C8P

Of 5eQ58DEB
BR7B7EC7GX3BR7B7EC7GY

g_ 5Sd5F>>E
BP7B8GF88P3BP7B8GF88Q

g_ 5dP59AD>
BP7B7EC8C3BR7B7EC8CQ

g_ 5eQ5F>>G
BR7B7EDGA0Q3BR7B7EDGA0R

Of 5eQ58DEF
BR7B7EC87X3BR7B7EC87Y

g_ 5Zd589CE
BR7B88A8ER3BR7B88A8EU

g_ 5dP59ADA
BR7B7E8C8Q3BR7B7EC8DQ

g_ 5eQ5F>A8
BR7B7EDGB0Q3BR7B7EDGB0R

Of 5eQ58E>A
BPAB7E8C803BPAB7E8C8Q

g_ 5Zd5>B9G
BR7C78C9G03BR7C78C9GS

g_ 5dP59ADB
BR7B7E8FA0P3BR7B7E8FA0Q

Of 5eQ5F>AG
BR7B7EC7CP3BR7B7EC7CR

g_ 5Zd5F>B8
BR7C7CBDCR

g_ 5dP59ADC
BR7B7E8F9S3BR7B7E8F9U

Y9C88>9
BA8B8GFA83F9AB8GFA8

g_ 5cY59C8BD
BR7B8GF78P /40

g_ 5dP59ADD
BR7B7E8F8T3BR7B7E8F8V

Y9C89AG
BR7B8GFA8P3BR7B8GFA8R

g_ 5cY59C8BG
BR7B8GF78P /40

g_ 5dP5DEBF
BR7B88A9ES3BR7B88A9EU

OF 0BS; 4BSF1	9878; 8E798		

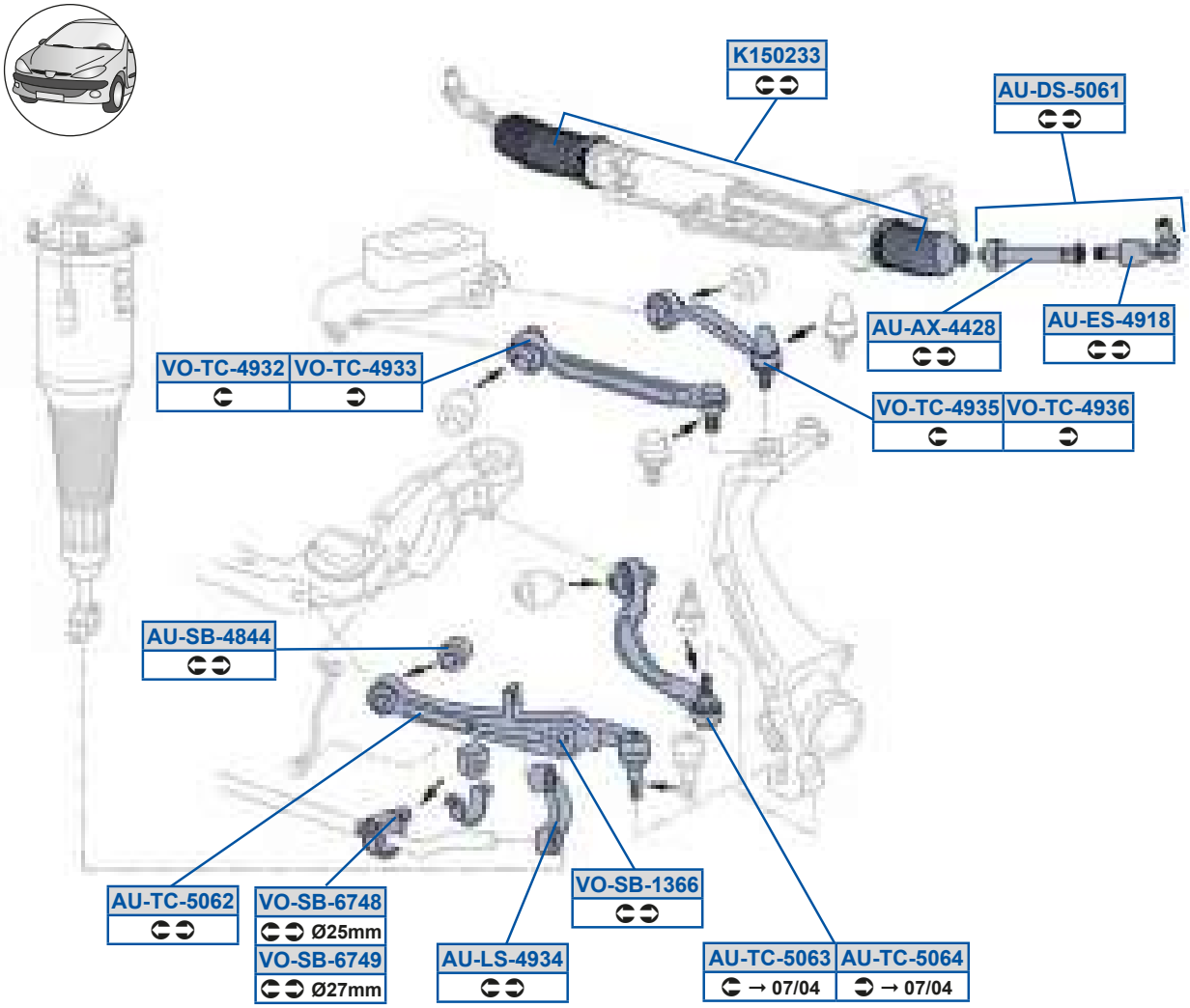

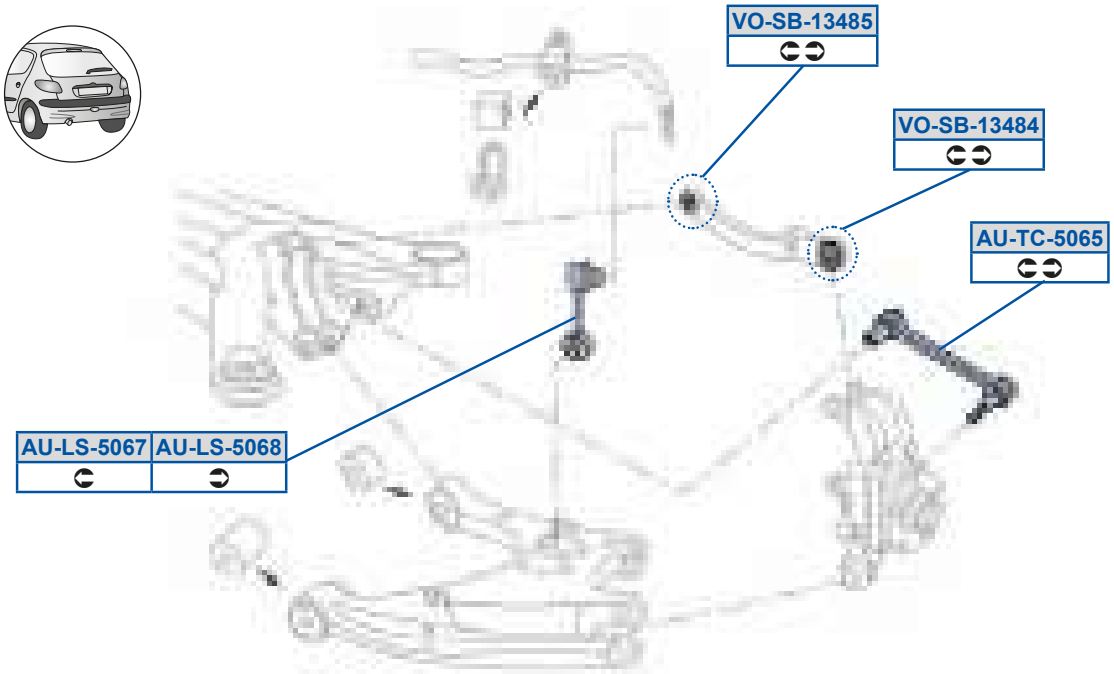

Of 5Oi 5BB>F
BS7B8GF98

Of 5Rd5C8D9
BS7B8GF78Q

Of 5Sd5BG9F
BS7B8GF88P3BS7B8GF88Q

Of 5Zd5BGAB
BS7B88A8ES

Of 5Zd5C8DE
BS7C7CCBE0

Of 5Zd5C8DF
BS7C7CCBF0

Of 5dP5BFBB
BS7B7E8F9Q

Of 5eQ5C8D>
BS7B7E8C8U3BS7B7E8C8Z

Of 5eQ5C8DA
BS7B7EDGAQ3BS7B7EDGAT

Of 5eQ5C8DB
BS7B7EDGBQ3BS7B7EDGBT

Of 5eQ5C8DC
BS7C78C9GQ3BS7C78C9GR

Y9C8>AA
BS7B8GFA8

g_ 5dP59ABFB
BS7C7C97AR

g_ 5dP59ABFC
BS7C7C97AP

g_ 5dP59ADD
BR7B7E8F8T3BR7B7E8F8V

g_ 5dP5DEBF
BR7B88A9ES3BR7B88A9EU

g_ 5dP5DEBG
BR7B88A9ET3BR7B88A9EV

g_ 5eQ5BGA>
BS7B7EC7CP3BS7B7EC7CS

g_ 5eQ5BGAA
BS7B7EC7DP3BS7B7EC7DS

g_ 5eQ5BGAC
BS7B7EC7GP3BS7B7EC7GS

g_ 5eQ5BGAD
BS7B7EC87P3BS7B7EC87S

Of RW

OF 0BV; 4BVF4BVQ4BVZ1	9978G		

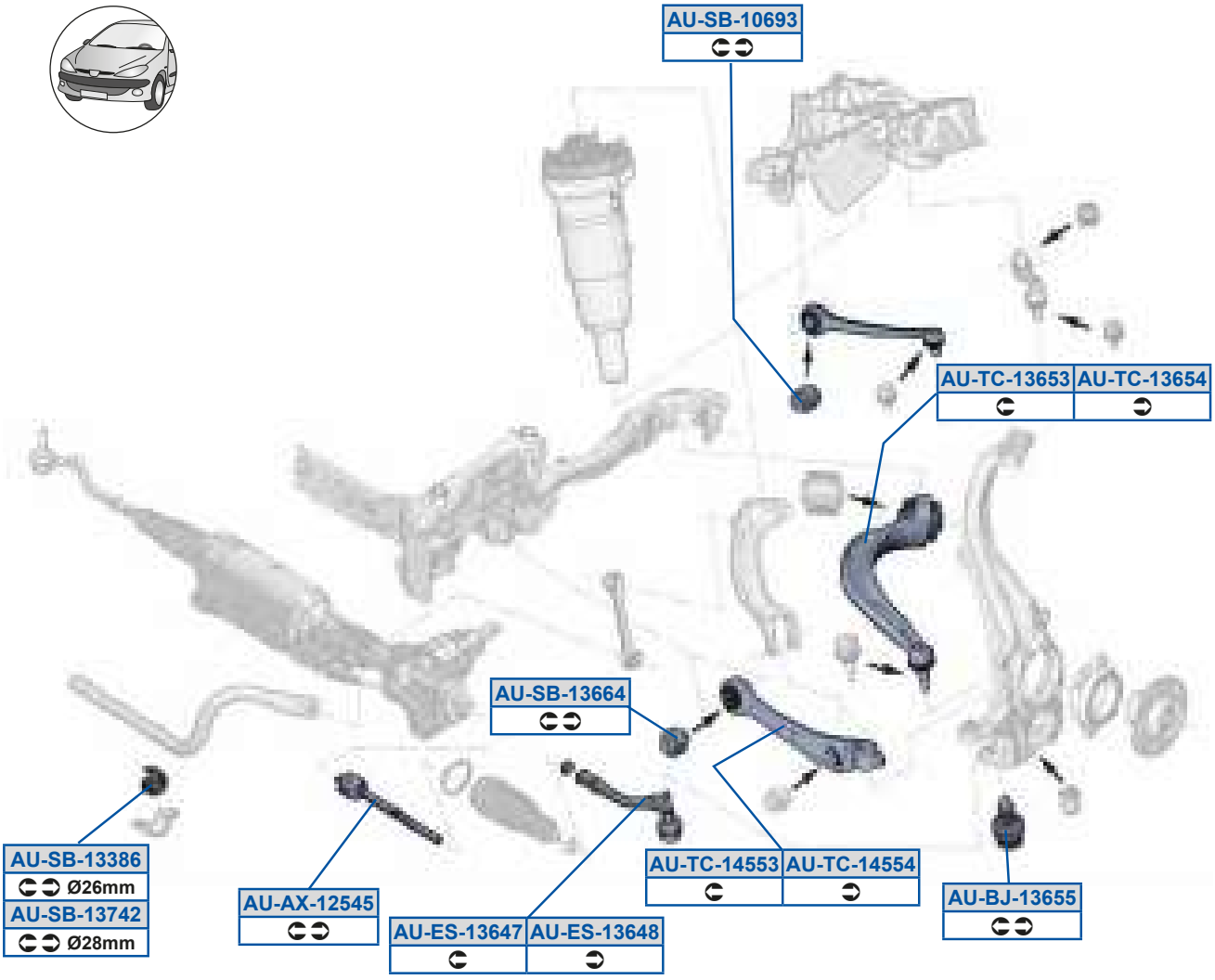

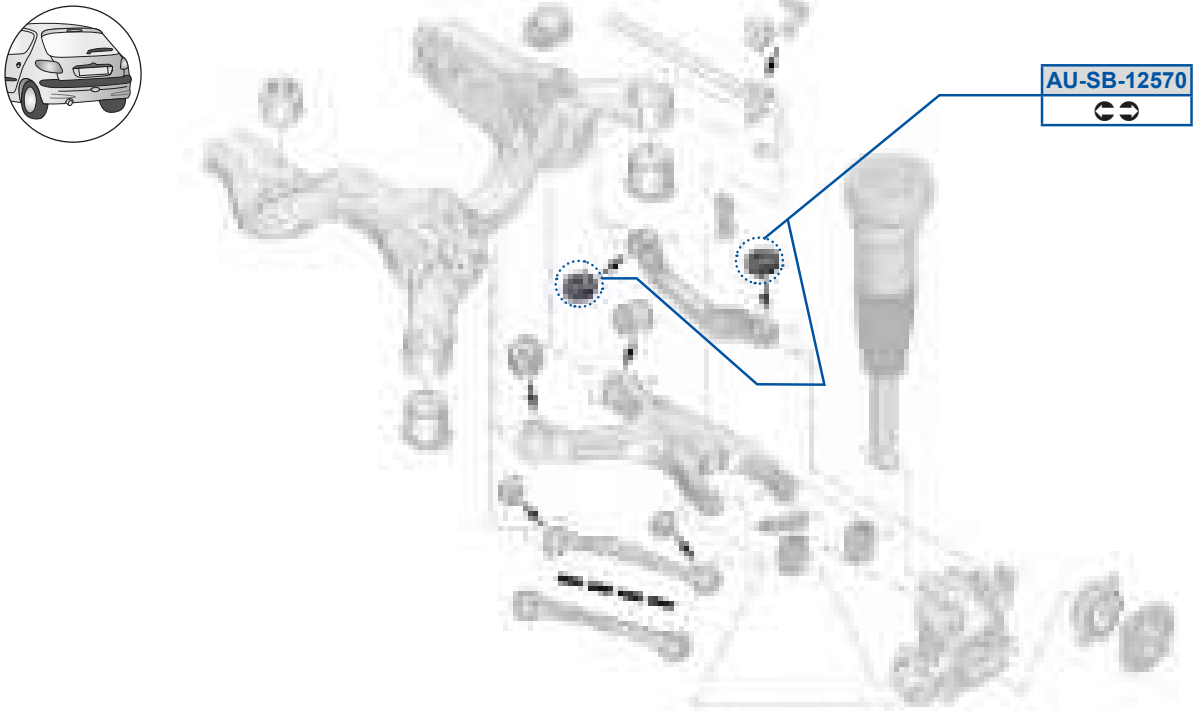

MOOG

Of 5Oi 59>CBC
BU7B9AF873BU7B9AF870

Of 5dP59AEB>
FY7B88A9EQ

Of 5PX59ADCC
BV7B7EDFG3BV7B7EDFG0

Of 5eQ59ADCA
BV7B7EDGAQ3BV7B7EDGAR

Of 5Sd59ADBE
BV7B99F8E0

Of 5eQ59ADCB
BV7B7EDGBQ3BV7B7EDGBR

Of 5Sd59ADBF
BV7B99F8F0

Of 5eQ59BCCA
BV7B7E8C803BV7B7E8C8P

Of 5dP598DGA
BV7B7EC8B03BV7B7EC8C

Of 5eQ59BCCB
BV7B7E8C903BV7B7E8C9P

Of 5dP59>CE8
FY7C78CB83FY7C7CA9AT /40

Of 5dP59AAFD
FY7B88A9EP

Of 5dP59ADDB
BV7B7E8F9P

Of RW

OZZc_OR 0BPV4QC1	8C788 8F78C		

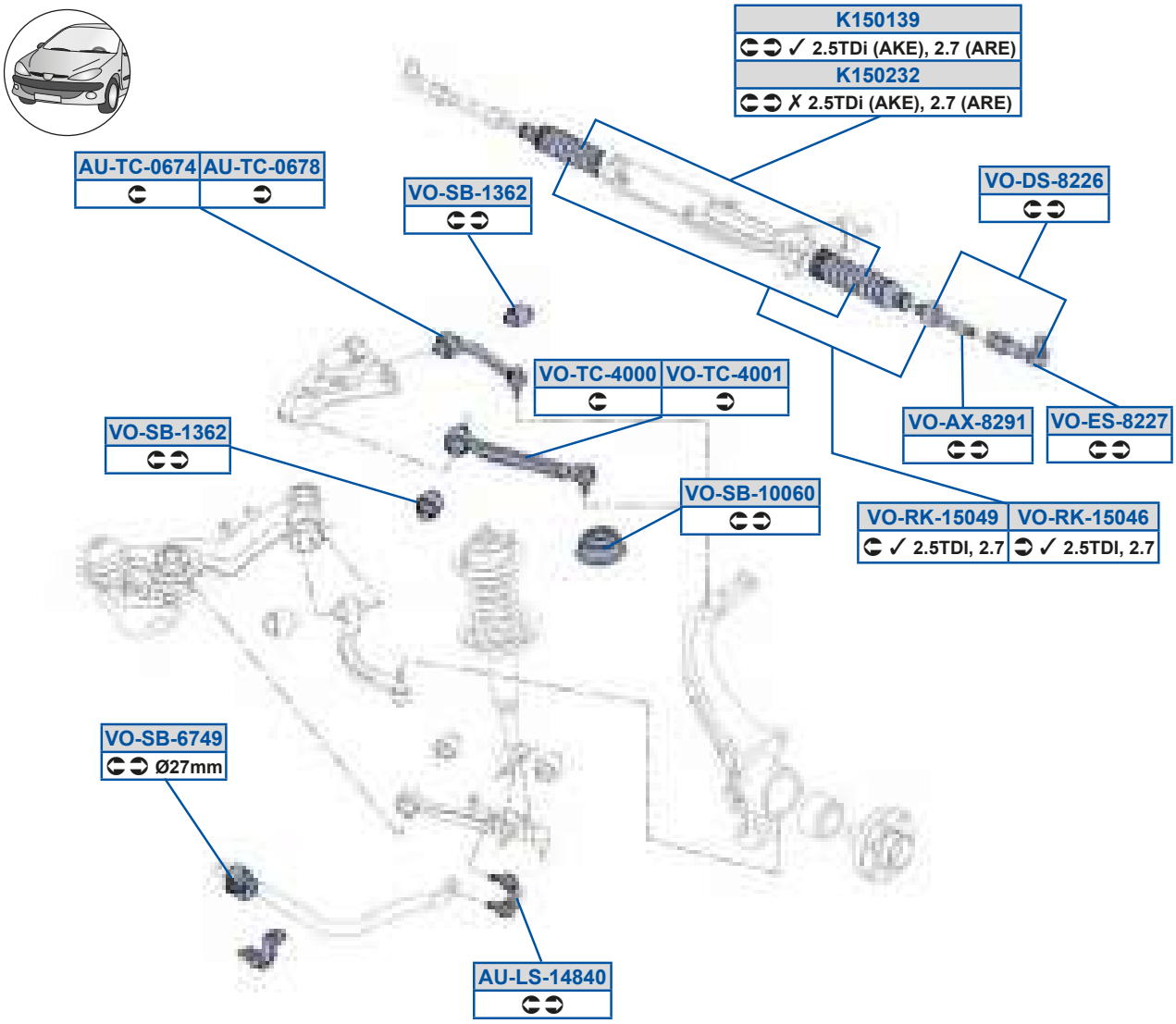

VO-SB-13505

VO-SB-13506

Oé r u 0BC7>888 5L 8F7>88C1 IBPV4QCn

Of 5Zd59BFB8
BR7B88A8EY

Of 5eQ58DEB
BR7B7EC7GX3BR7B7EC7GY

Of 5eQ58DEF
BR7B7EC87X3BR7B7EC87Y

Y9C89AG
BR7B8GFA8P3BR7B8GFA8R

Y9C8>A>
BR7B8GFA8S3BR7B8GFA8Y

g_ 5Oi 5F>G9
BR7B8GF78P /40

g_ 5Rd5F>>D
BP7B8GF78P3BP7B8GF78S

g_ 5Sd5F>>E
BP7B8GF88P3BP7B8GF88Q

g_ 5cY59C8BD
BR7B8GF78P /40

g_ 5cY59C8BG
BR7B8GF78P /40

g_ 5dP5988D8
BR7B89AEET3B EDGFC7E

g_ 5dP59AC8C
FS7C7C8FCQ

g_ 5dP59AC8D
FS7C7C8E9O

g_ 5dP59AD>
BP7B7EC8C3BR7B7EC8CQ

g_ 5dP5DEBG
BR7B88A9ET3BR7B88A9EV

g_ 5eQ5B888
FR7B7EC7CO3FR7B7EC7CP

g_ 5eQ5B889
FR7B7EC7DO3FR7B7EC7DP

Of RW Oéé r u 08C7>888 5L 8F7>88C1IBPV4QOn

Of RW

bA 0Ff P4Ff U1	8D799		

b A 0 8D7>899 5L1 IFf n

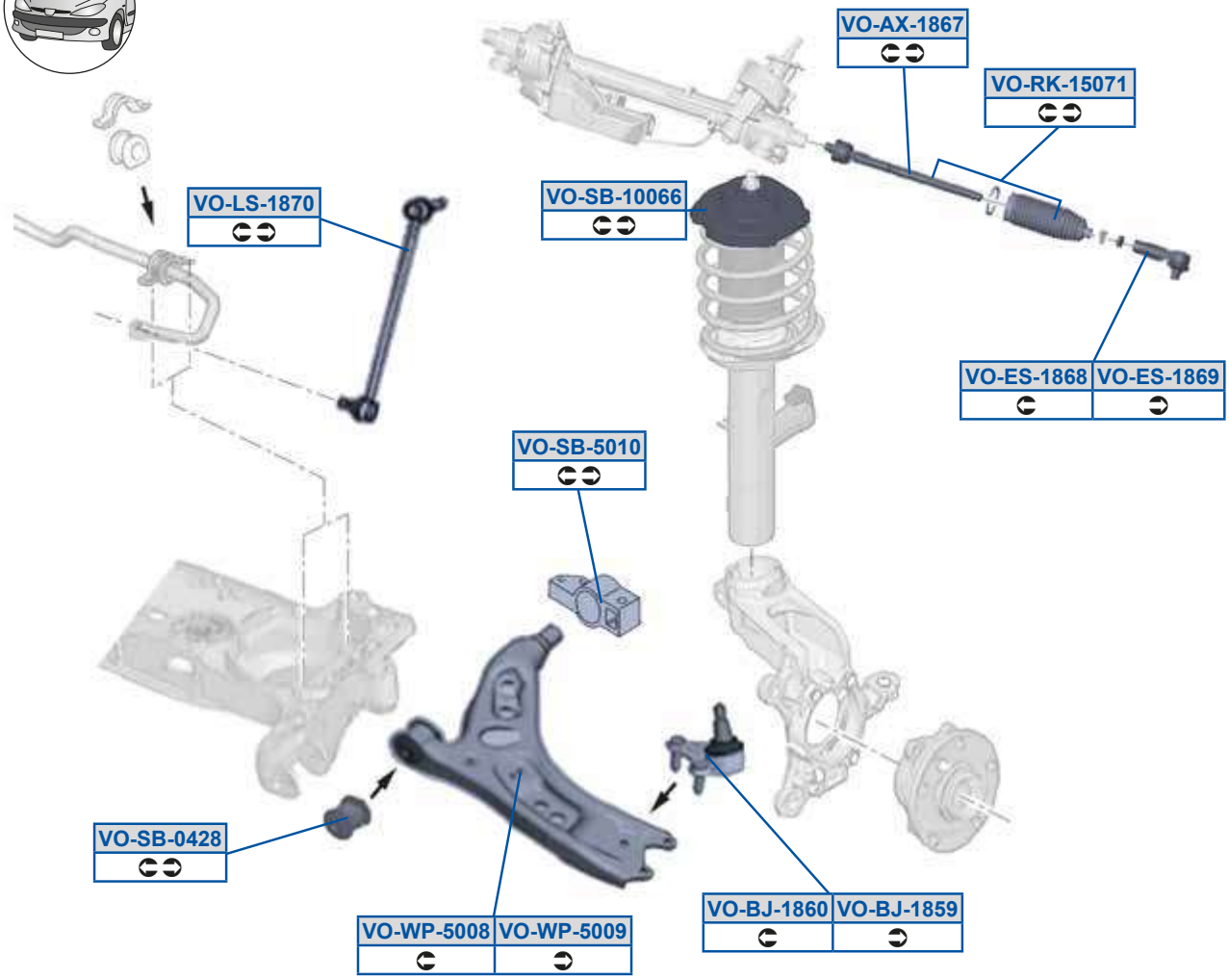

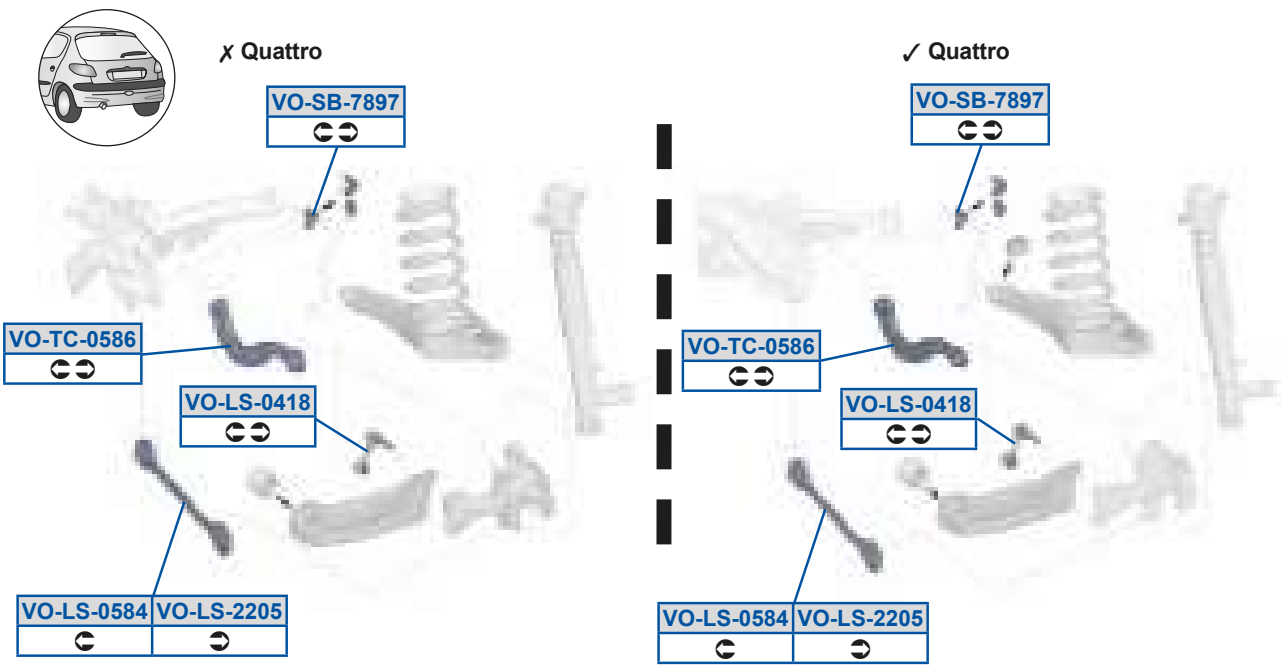

MOOG

g_ 5Oi 59FDE
8Y7B9AF87O

g_ 5Zd5>>8C
8Y7C78CA7P38Y7C78CA7Q

g_ 5h a5C88G
AQ7B7E8C8O3AQ7B7E8C8P

g_ 5PX59FCG
8Y7B7EADDP38Y7B7EADDQ

g_ 5c Y59C8E9
8Y7B9AF87O

g_ 5PX59FD8
8Y7B7EADCP38Y7B7EADCQ

g_ 5dP58B>F
8Y7B7E8F938Y7B7E8F9O

g_ 5Sd59FDF
8Y7B9AF88O38Y7B9AF88P

g_ 5dP5988DD
Dd7B899BGQ

g_ 5Sd59FDG
8Y7B9AF89O38Y7B9AF89P

g_ 5dP5C898
AQ78GG9A8O3AQ78GG9A8P

g_ 5Zd58B9F
8Y7C7CBDCOO38Y7C7CBDCQ

g_ 5dP5EFGE
8Y7C88A9EOo

g_ 5Zd58CFB
8Y7C78C9GS38Y7C78C9GT

g_ 5eQ58CFD
8Y7C7CA9AV38Y7C7CA9Ad

g_ 5Zd59FE8
8Y7B88A8CP38Y7B88A8CX

g_ 5h a5C88F
AQ7B7E8C8O3AQ7B7E8C8P

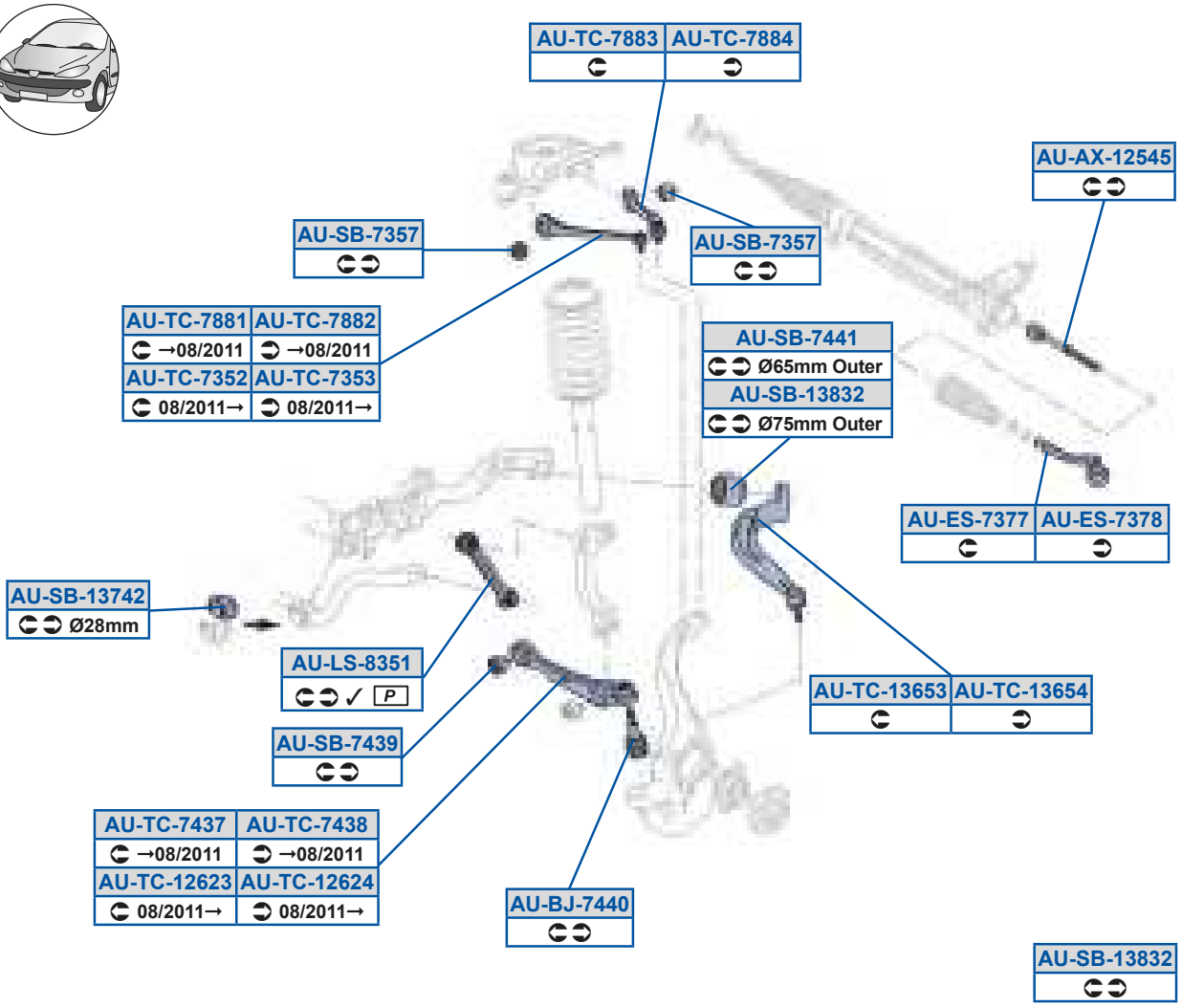
AU-TC-7883
AU-TC-7884
AU-AX-12545
AU-SB-7357
AU-SB-7357
AU-TC-7881
AU-TC-7882
→08/2011
→08/2011
AU-TC-7352
AU-TC-7353
08/2011→
08/2011→
AU-SB-7441
Ø65mm Outer
AU-SB-13832
Ø75mm Outer
AU-ES-7377
AU-ES-7378
AU-SB-13742
Ø28mm
AU-LS-8351
P
AU-TC-13653
AU-TC-13654
AU-SB-7439
AU-TC-7437
AU-TC-7438
→08/2011
→08/2011
AU-TC-12623
AU-TC-12624
08/2011→
08/2011→
AU-BJ-7440
AU-SB-13832

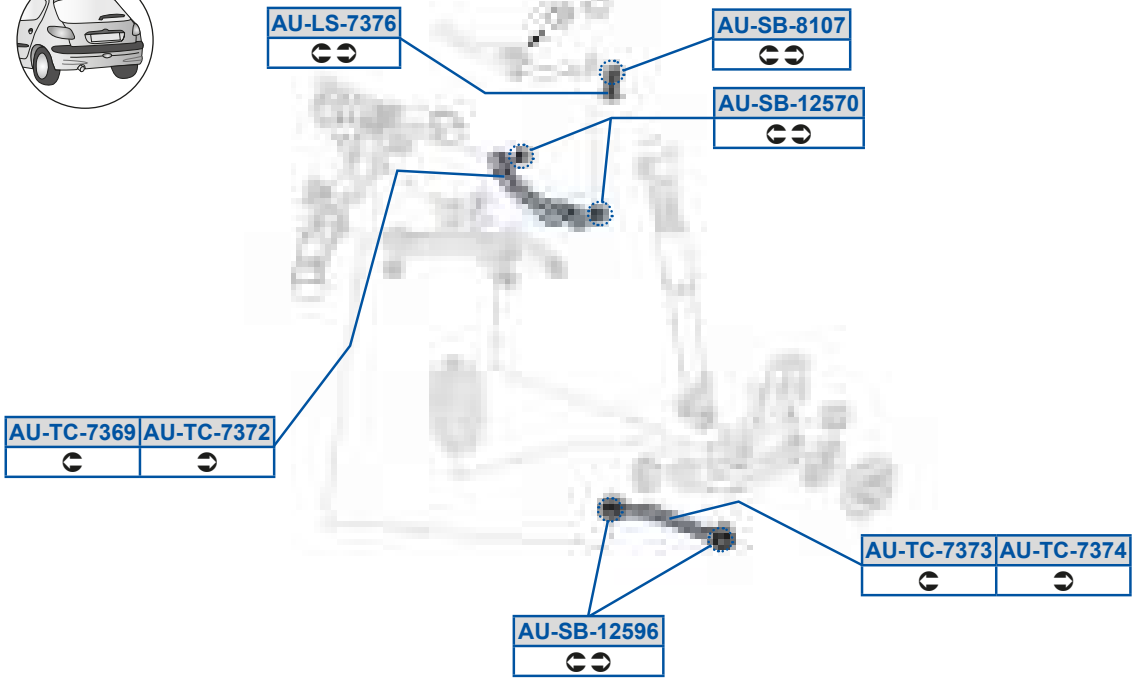
AU-LS-7376
AU-SB-8107
AU-SB-12570
AU-TC-7369
AU-TC-7372
AU-TC-7373
AU-TC-7374
AU-SB-12596

Of 5Oi 59>CBC
BU7B9AF873BU7B9AF87O

Of 5dP59AEB>
FY7B88A9EQ

Of 5eQ59ADCA
BV7B7EDGAQ3BV7B7EDGAR

Of 5eQ5EBAE
FY7B7E8C8P3FY7B7E8C8Q

Of 5PX5EBB8
FY7B7EDFGR3FY7B7EDFGS

Of 5dP59AFA>
FY7B7E8FAR

Of 5eQ59ADCB
BV7B7EDGBQ3BV7B7EDGBR

Of 5eQ5EBAF
FY7B7E8C9P3FY7B7E8C9Q

Of 5Sd5EAEE
FY7B99F8EO3FY7B99F8EP

Of 5dP5EACE
FY7B7EC8C

Of 5eQ5EAC>
FY7B7EC7CO3FY7B7EC7Cd

Of 5eQ5EFF9
FY7B7EC7CP3FY7B7EC7Ca

Of 5Sd5EAEF
BU7B9AF89O3FY7B99F8FO

Of 5dP5EBAG
FY7B7E8F9O3FY7B7E8F9P

Of 5eQ5EACA
FY7B7EC7DO3FY7B7EC7Dd

Of 5eQ5EFF>
FY7B7EC7DP3FY7B7EC7Da

Of 5Zd5EAED
FY7C7CBDCS3FY7C7CBDCU

Of 5dP5EBB9
FY7B7E8FAO3FY7B7E8FAP

Of 5eQ5EADG
FY7C7CA9AR3FY7C7CA9AT

Of 5eQ5EFFA
FY7B7EC7GP

Of 5Zd5FAC9
BV7B88A8EO3BV7B88A8EQ

Of 5dP5F98E
FY7C7CBDCS /40

Of 5eQ5EAE>
FY7C7CA9BR3FY7C7CA9BT

Of 5eQ5EFFB
FY7B7EC87P

Of 5dP59>CE8
FY7C78CB83FY7C7CA9AT /40

Of 5eQ59>D>A
FY7B7E8C8T3FY7B7E8C8U

Of 5eQ5EAEA
FY7C78C9GY3FY7C78C9Gd

Of 5dP59>CGD
FY7C78C9GY /40

Of 5eQ59>D>B
FY7B7E8C9T3FY7B7E8C9U

Of 5eQ5EAEB
FY7C78CA7Y3FY7C78CA7d

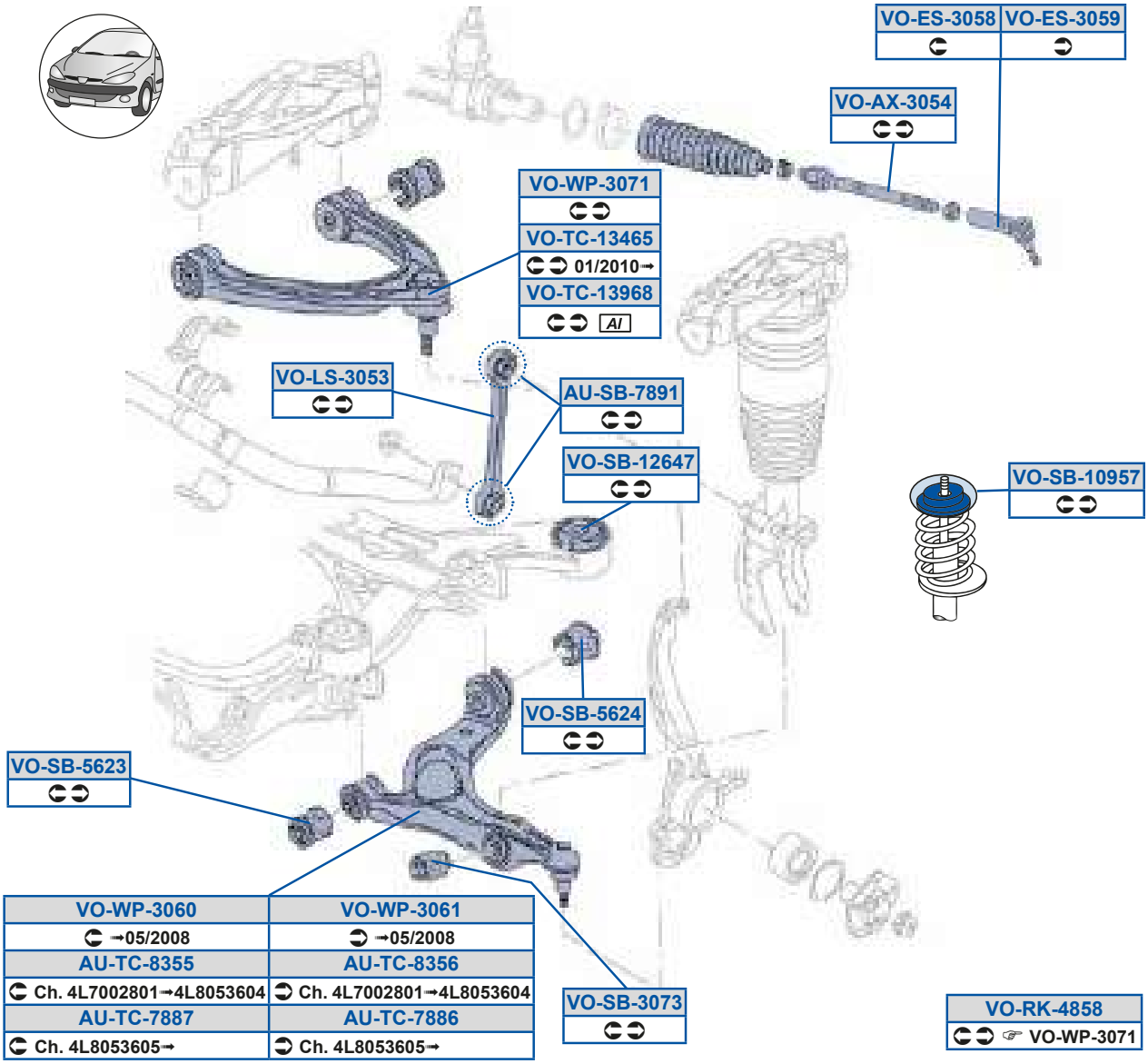
VO-ES-3058
VO-ES-3059
VO-AX-3054
VO-WP-3071
VO-TC-13465
01/2010→
VO-TC-13968
AI
VO-LS-3053
AU-SB-7891
VO-SB-12647
VO-SB-10957
VO-SB-5624
VO-SB-5623
VO-WP-3060
→05/2008
VO-WP-3061
→05/2008
AU-TC-8355
Ch. 4L7002801→4L8053604
AU-TC-8356
Ch. 4L7002801→4L8053604
AU-TC-7887
Ch. 4L8053605→
AU-TC-7886
Ch. 4L8053605→
VO-SB-3073
VO-RK-4858
VO-WP-3071

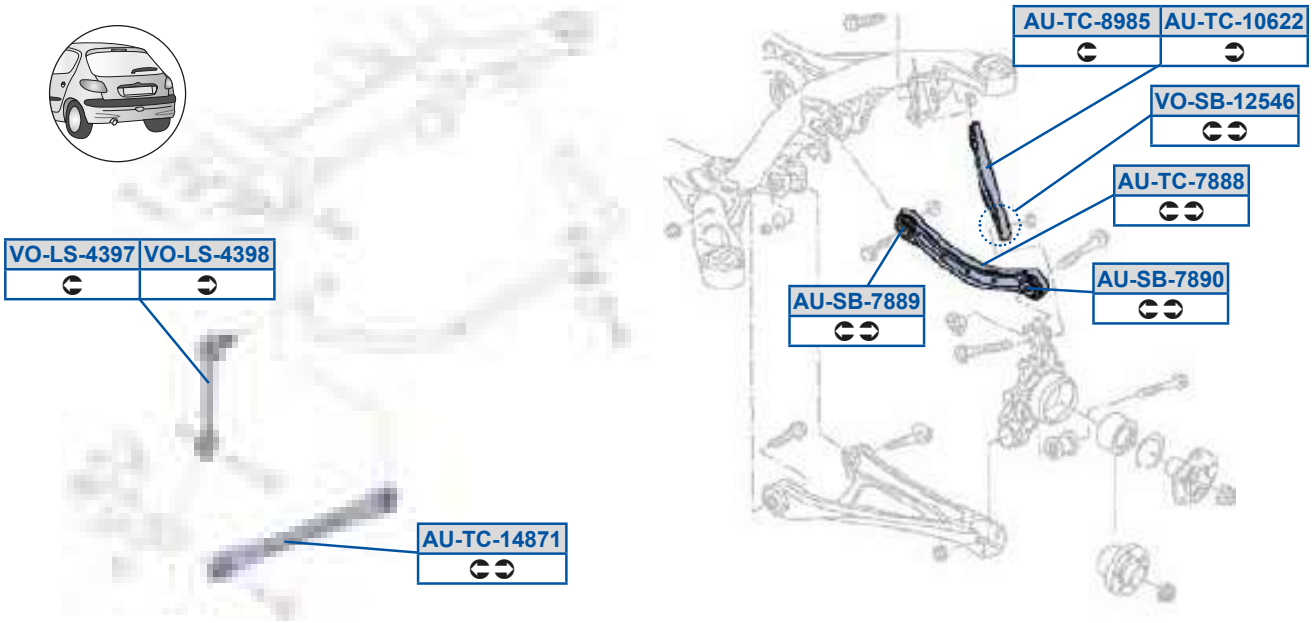
AU-TC-8985
AU-TC-10622
VO-SB-12546
AU-TC-7888
VO-LS-4397
VO-LS-4398
AU-SB-7889
AU-SB-7890
AU-TC-14871

MOOG

b E 03A7>88D 5L 8F7>89C11BZn
Of RW

Of 5dP5EFFG
EZ7C7CA9A0 /40

Of 5dP5EFG8
EZ7C7CA9A0 /40

Of 5dP5EFG9
EZ7B88A8E /40

Of 5eQ598D>>
EZ7C7CAGF

Of 5eQ59BFE9
EZ7C78C9GQ3EZ7C78C9GR

Of 5eQ5EFFD
EZFB7E8C9T3EZFB7E8C9Y

Of 5eQ5EFFE
EZFB7E8C8T3EZFB7E8C8Y

Of 5eQ5EFFF
EZ7C7CA9A0

Of 5eQ5FACC
EZFB7E8C8R3EZFB7E8C8S

Of 5eQ5FACD
EZFB7E8C9R3EZFB7E8C9S

Of 5eQ5FGFC
EZ7C7CAGE

g_ 5Oi 5A8CB
EZ7B99F98

g_ 5Sd5A8CF
EZ7B99F8EP3EZ7B99F8EQ

g_ 5Sd5A8CG
EZ7B99F8FP3EZ7B99F8FQ

g_ 5Zd5A8CA
EZ7B88A8E

g_ 5Zd5BAGE
EZ7C7CBDCQ3EZ7C7CBDCR

g_ 5Zd5BAGF
EZ7C7CBDDQ3EZ7C7CBDDR

g_ 5cY5BFCF
EZ7B7E7EE

g_ 5dP598GCE

g_ 5dP59>CBD
EZ7C7CAGE /40

g_ 5dP59>DBE
EZ7B7E8F9T3EZ7B7E8F9U

g_ 5dP5A8EA
EZ7B89AAA0

g_ 5dP5CD>A
EZ7B7E8FA03EZFB7E8FA

g_ 5dP5CD>B
EZ7B7E8F9Q3EZ7B7E8F9S

g_ 5eQ59ABDC
Ei 7B7E798

g_ 5eQ59AGDF
EZFB7E798

g_ 5h a5A8D8
EZ7B7E8C8Q3EZ7B7E8C8S

g_ 5h a5A8D9
EZ7B7E8C9Q3EZ7B7E8C9S

g_ 5h a5A8E9
EZ7B7E7983EZ7B7E7980

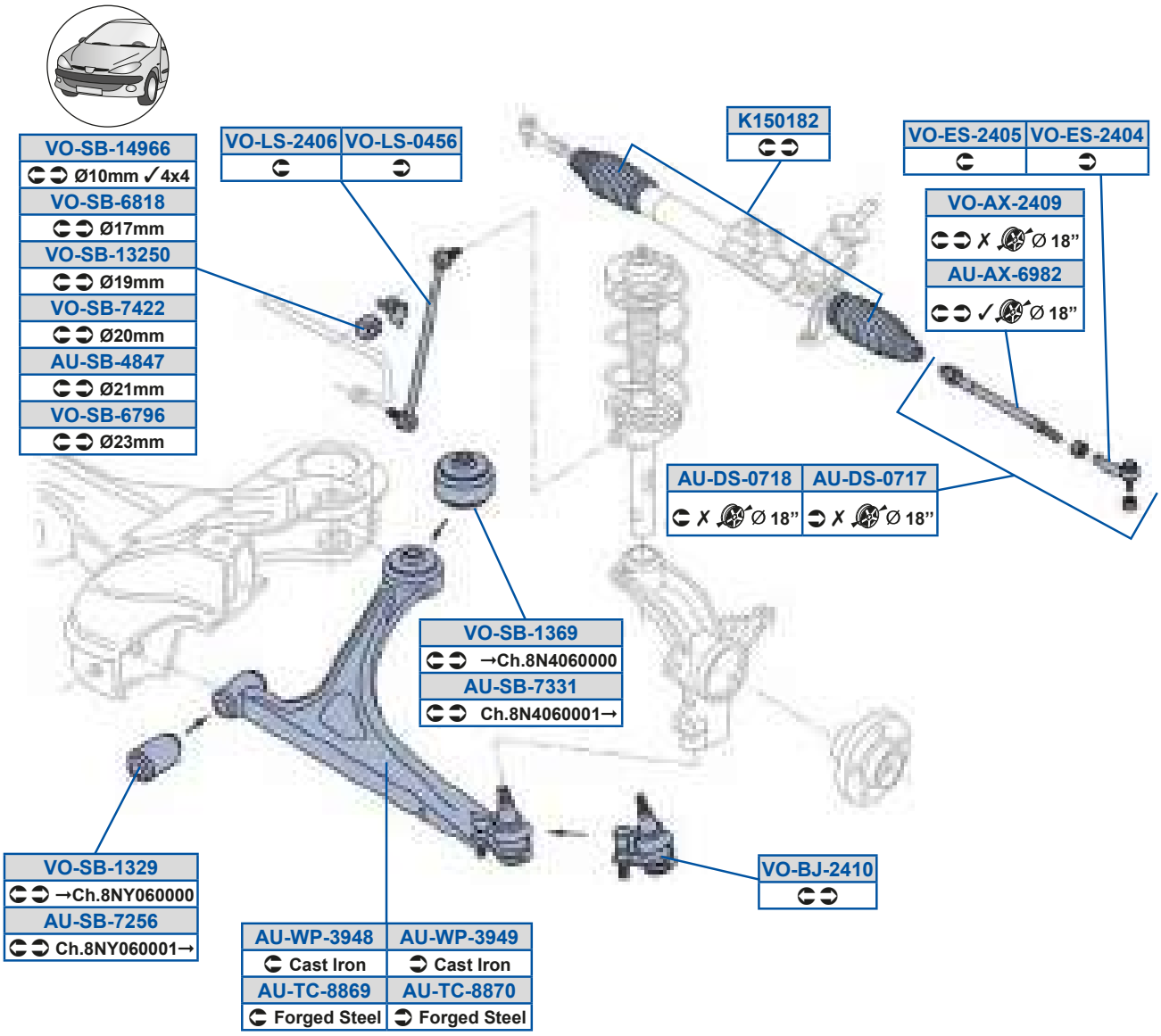
VO-SB-14966
Ø10mm ✓4x4
VO-SB-6818
Ø17mm
VO-SB-13250
Ø19mm
VO-SB-7422
Ø20mm
AU-SB-4847
Ø21mm
VO-SB-6796
Ø23mm
VO-LS-2406
VO-LS-0456
K150182
VO-ES-2405
VO-ES-2404
VO-AX-2409
✗ Ø 18"
AU-AX-6982
✓ Ø 18"
AU-DS-0718
✗ Ø 18"
AU-DS-0717
✗ Ø 18"
VO-SB-1369
→Ch.8N4060000
AU-SB-7331
Ch.8N4060001→
VO-SB-1329
→Ch.8NY060000
AU-SB-7256
Ch.8NY060001→
AU-WP-3948
Cast Iron
AU-WP-3949
Cast Iron
AU-TC-8869
Forged Steel
AU-TC-8870
Forged Steel
VO-BJ-2410

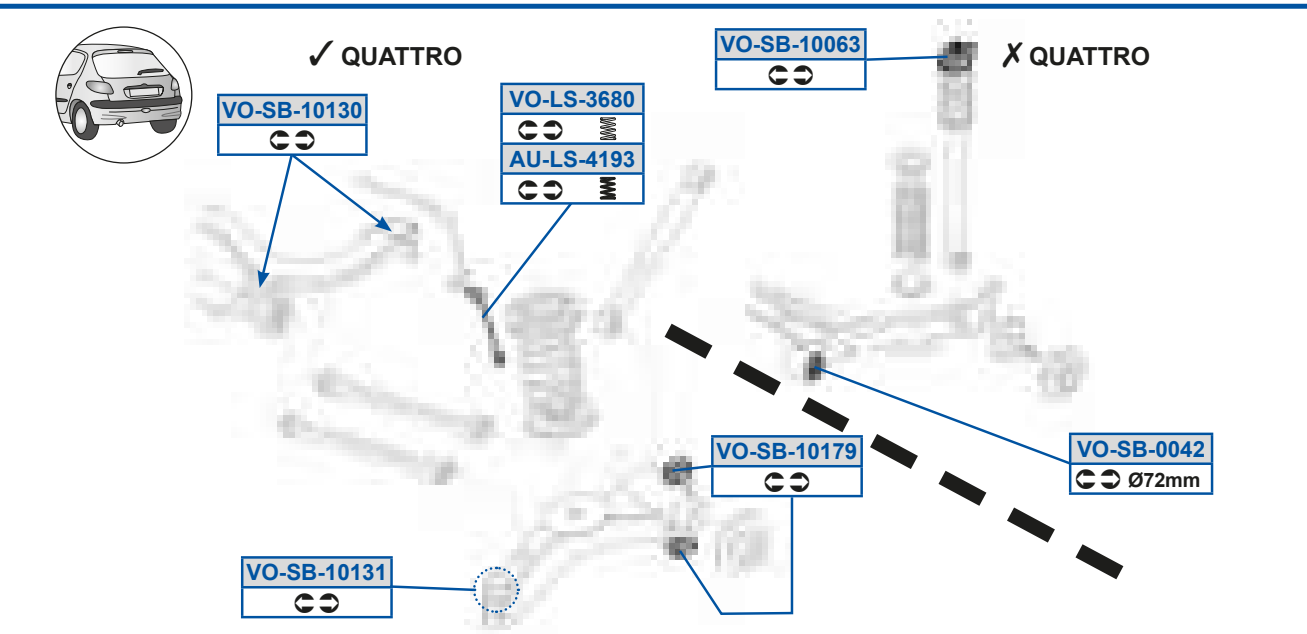
✓ QUATTRO
✗ QUATTRO
VO-SB-10063
VO-SB-10130
VO-LS-3680
AU-LS-4193
VO-SB-10179
VO-SB-0042
Ø72mm
VO-SB-10131

Of 5Oi 5DGF>
Fd7B99F7ER

Of 5eQ5FFE8
Fd7B7E8C903Fd7B7E8C9R

g_ 5Zd58BCD
8X7B88A8DR

g_ 5dP59A>C8
8X7B88A8Bn

Of 5Rd58E9E
Fd7B99F7B03Fd7B99F7BQ

Of 5h a5AGBF
Fd7B7E8C803Fd7B7E8C8R

g_ 5Zd5>B8D
8X7B88A8CR

g_ 5dP59A>G
8G8B7E8F93ACEB7E8F9

Of 5Rd58E9F
Fd7B99F7A03Fd7B99F7AQ

Of 5h a5AGBG
Fd7B7E8C903Fd7B7E8C9R

g_ 5Zd5ADF8
8X7C7CBDDP

g_ 5dP59ADG
8X7B7E8F838X7B7E8F80

Of 5Zd5B9GA
8X7C7CBDDQ

Y9C89F>
8X7B99FA838X7B99FA8P

g_ 5dP588B>
8X7C78CB8Q

g_ 5dP59BGDD
FR7C88A9EQ

Of 5dP5BFBE
8X7B88A8BQ

g_ 5Oi 5>B8G
Fd7B99F7A0 /40

g_ 5dP5988DA
8X7C8AACAP38X7C8AACAQ

g_ 5dP5DEGD
8X7B88A8BU38X7B88A8Bt

Of 5dP5E>CD
Fd7B7E8F90

g_ 5PX5>B98
Fd7B7EADC03Fd7B7EADCP

g_ 5dP5989A8
8X7C7C8BC038X7C7C8BCP

g_ 5dP5DF9F
8X7B88A8B38X7B88A8Bo

Of 5dP5EAA9
Dn7B7E8F8P3Fd7B7E8F8P

g_ 5Sd5>B8B
Fd7B99F893Fd7B99F890

g_ 5dP5989A9
8X7C7C8E8P

g_ 5dP5EB>>
8X7B88A8Bi

Of 5eQ5FFDG
Fd7B7E8C803Fd7B7E8C8R

g_ 5Sd5>B8C
Fd7B99F880

g_ 5dP5989EG
8X7C7C97A38X7C7CADCR

ee 0FXA1	8F78D 8D79B	ee c tw x 0FXG1	8A78E 8D79B

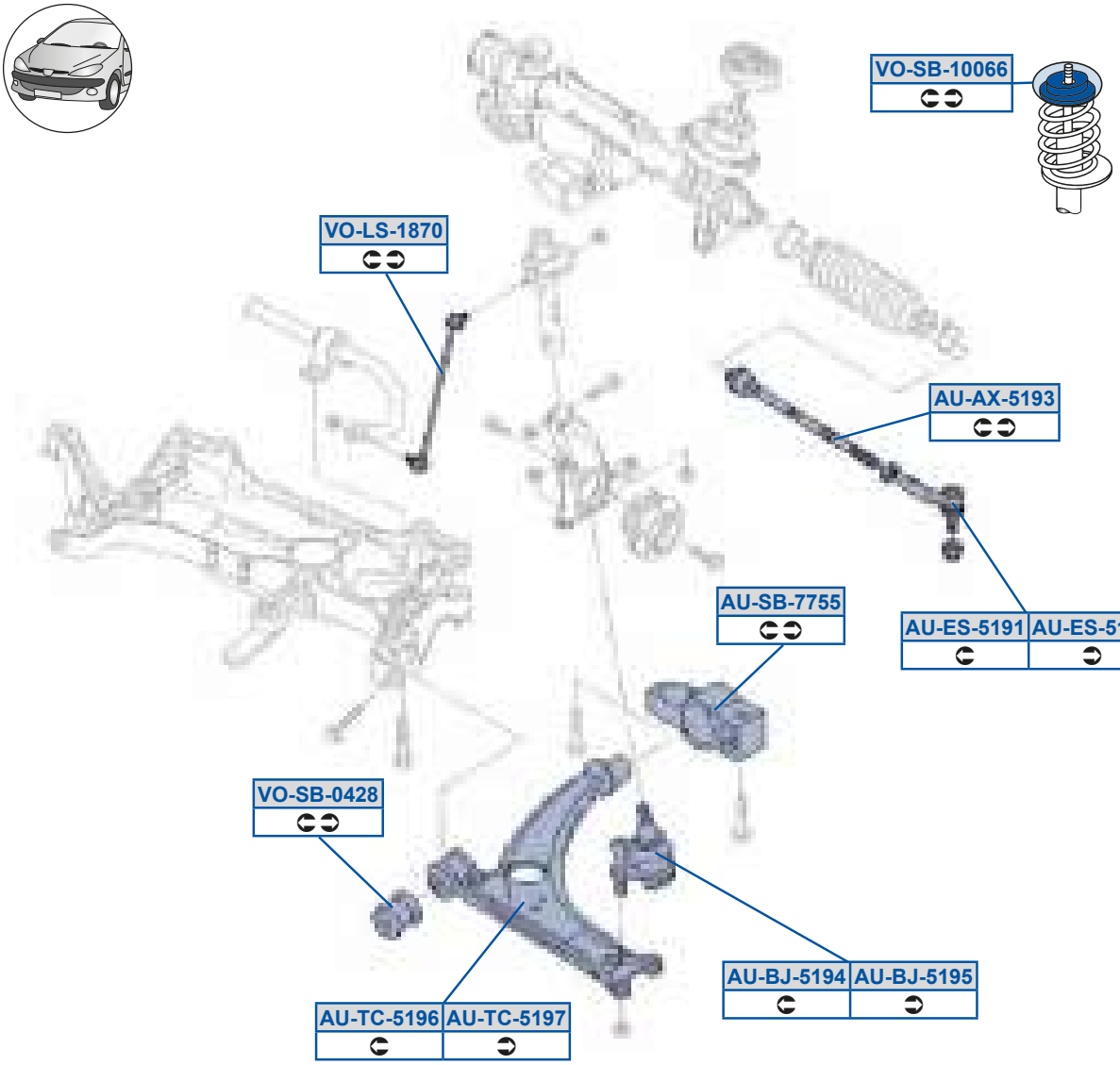

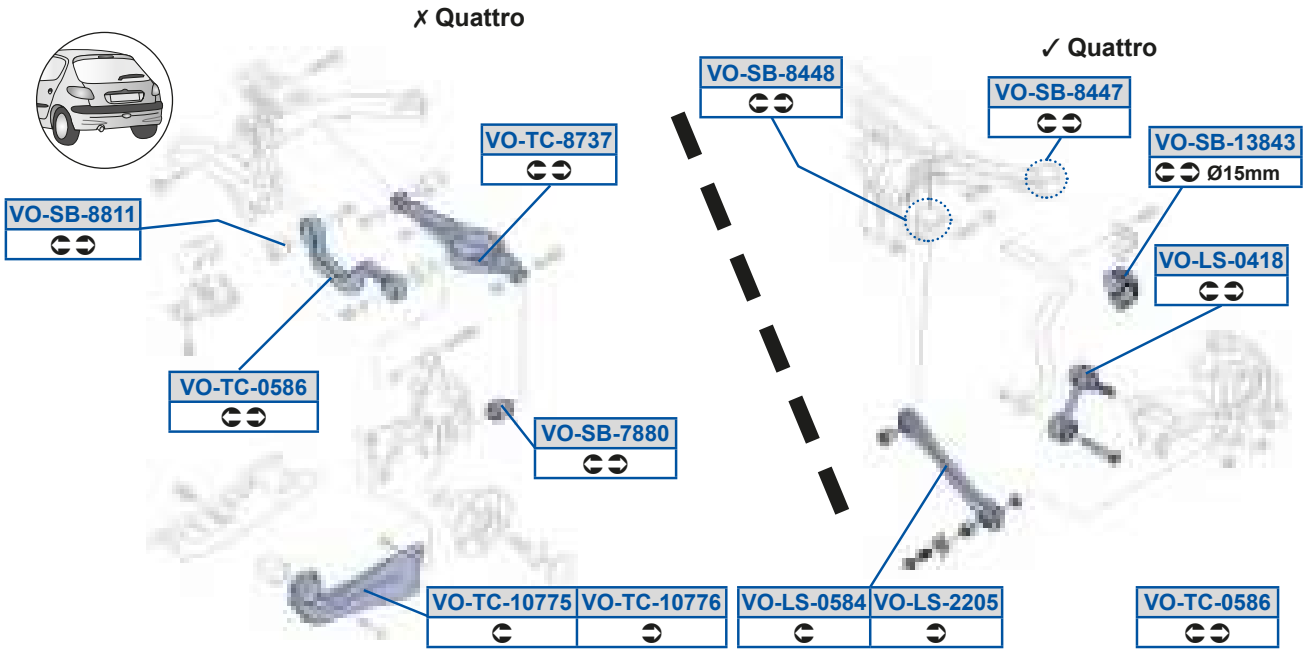

MOOG

Of 5Oi 5C9GA
BV7B99F873BV7B99F87O

g_ 5Zd58B9F
8Y7C7CBDCO038Y7C7CBDCQ

g_ 5dP5EFF8
8Y7C7CCCA38Y7C7CCCAO

Of 5PX5C9GB
FX7B7EADC

g_ 5Zd58CFB
8Y7C78C9GS38Y7C78C9GT

g_ 5dP5FBBE
8Y7C7C8BCS38Y7C7C8BCU

Of 5PX5C9GC
FX7B7EADD

g_ 5Zd59FE8
8Y7B88A8CP38Y7B88A8CX

g_ 5dP5FBBF
8Y7C7C8BCT38Y7C7C8BCV

Of 5Sd5C9G9
FX7B9AF88

g_ 5Zd5>>8C
8Y7C78CA7P38Y7C78CA7Q

g_ 5dP5FF99
8Y7C7C9EGO

Of 5Sd5C9G>
FX7B9AF89

g_ 5dP58B>F
8Y7B7E8F938Y7B7E8F9O

g_ 5eQ58CFD
8Y7C7CA9AV38Y7C7CA9Ad

Of 5dP5EECC
FX78GG9A8

g_ 5dP5988DD
Dd7B899BGQ

g_ 5eQ598EEC
8Y7C7C99AS38Y7C7C99AV

Of 5eQ5C9GD
FX7B7E8C8R 2 P X

g_ 5dP59>CBF
8Y7C7CCCA38Y7C7CCCAO

g_ 5eQ598EED
8Y7C7C99BS38Y7C7C99BV

Of 5eQ5C9GE
FX7B7E8C8R 2 P X

g_ 5dP59AFBA
8Y7C88A9EPO

g_ 5eQ5FEAE
8Y7C7CA88O038Y7C7CA88OP

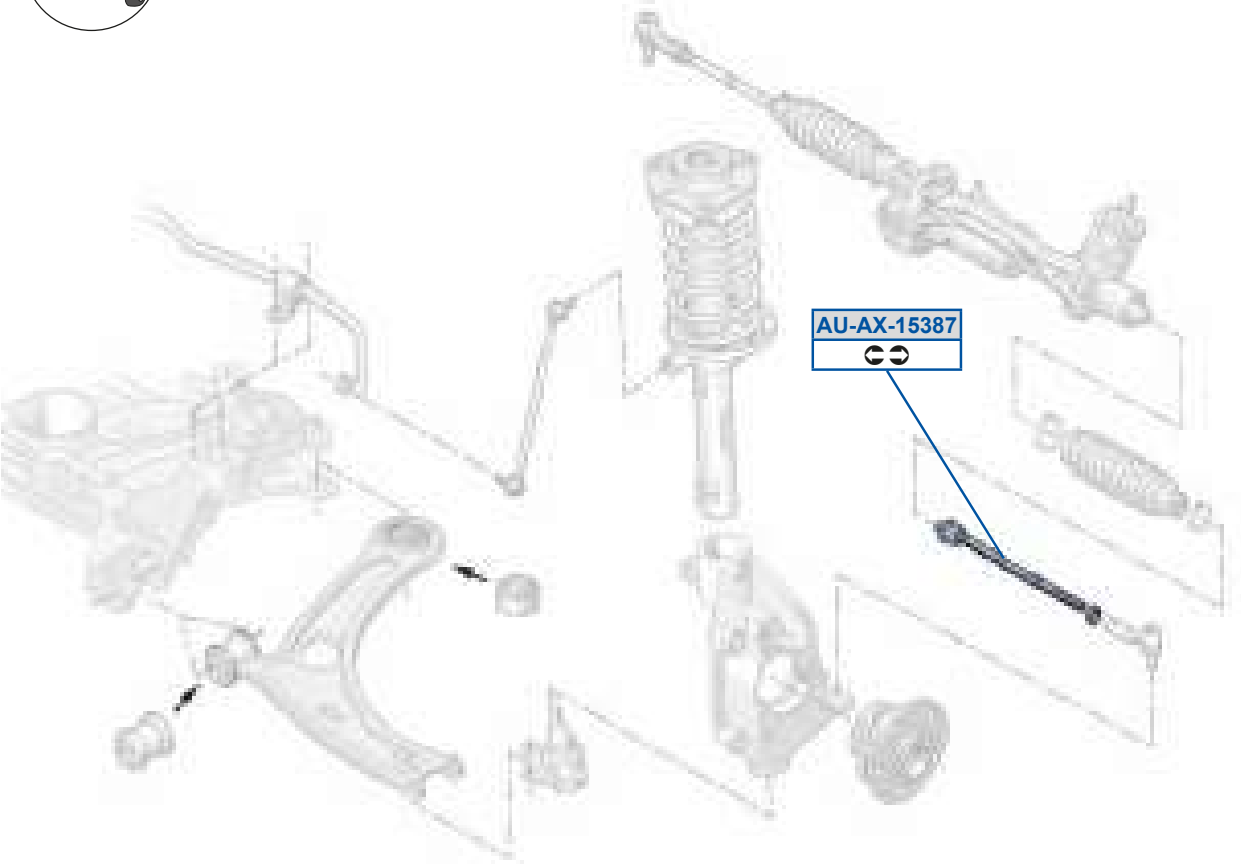
AU-AX-15387

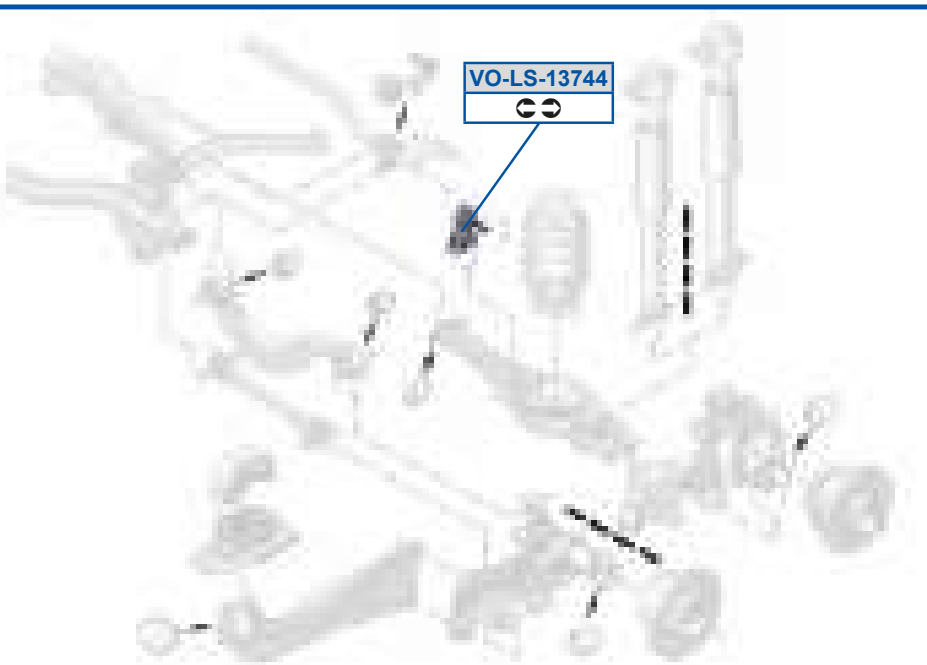
VO-LS-13744

Of 5Oi 59CAFE

Fo7B9AF87O

g_ 5Zd59AEBB

Cl 7C7CBDCQ

P[h

9 0SF91	8G78D 9; 799	9 0SFE1	8A78A 8G79;
9 Q x áu x 0SFF1	8A78F 9; 79A	9 Q x 0SF; 1	9878D 9879A

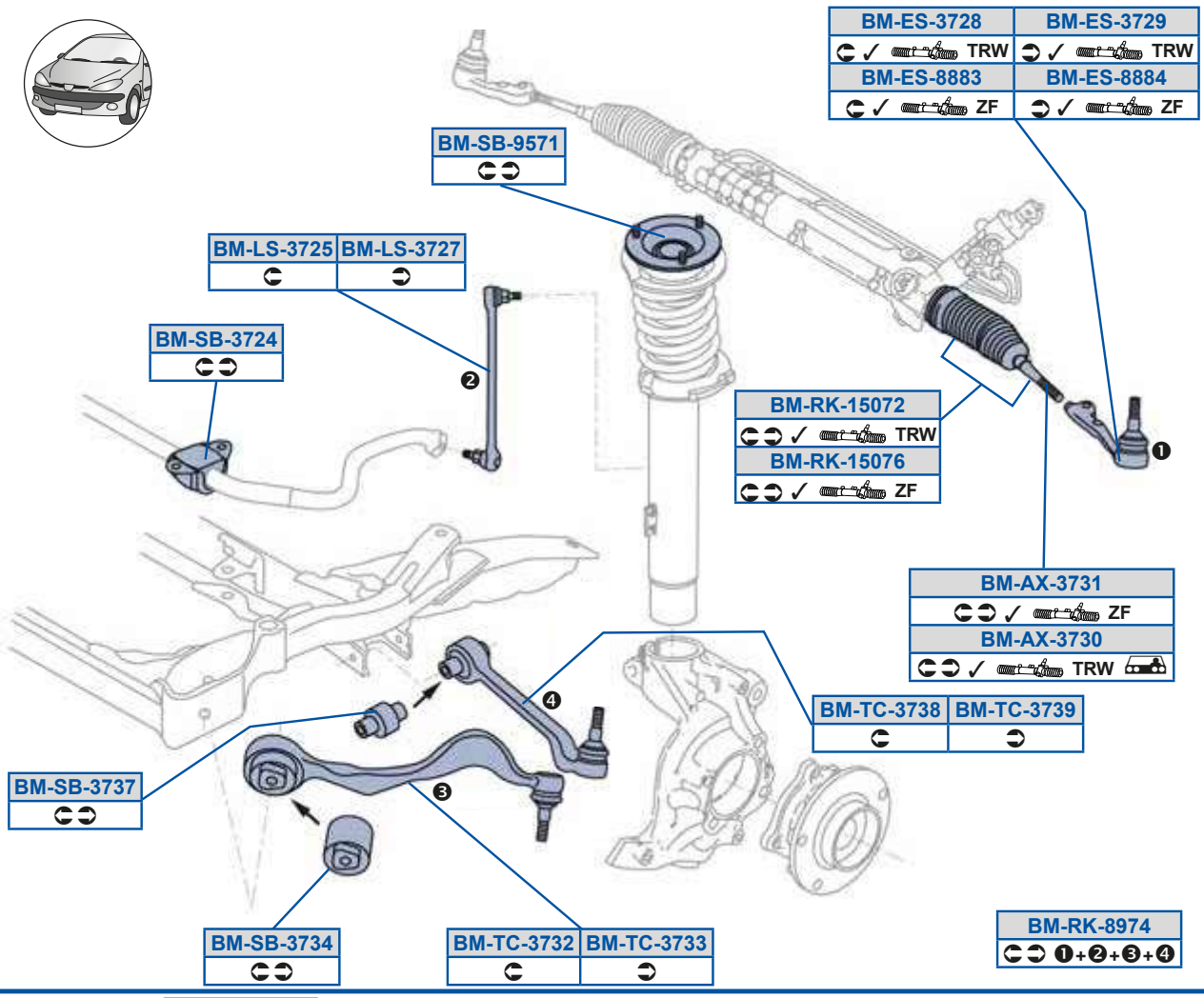

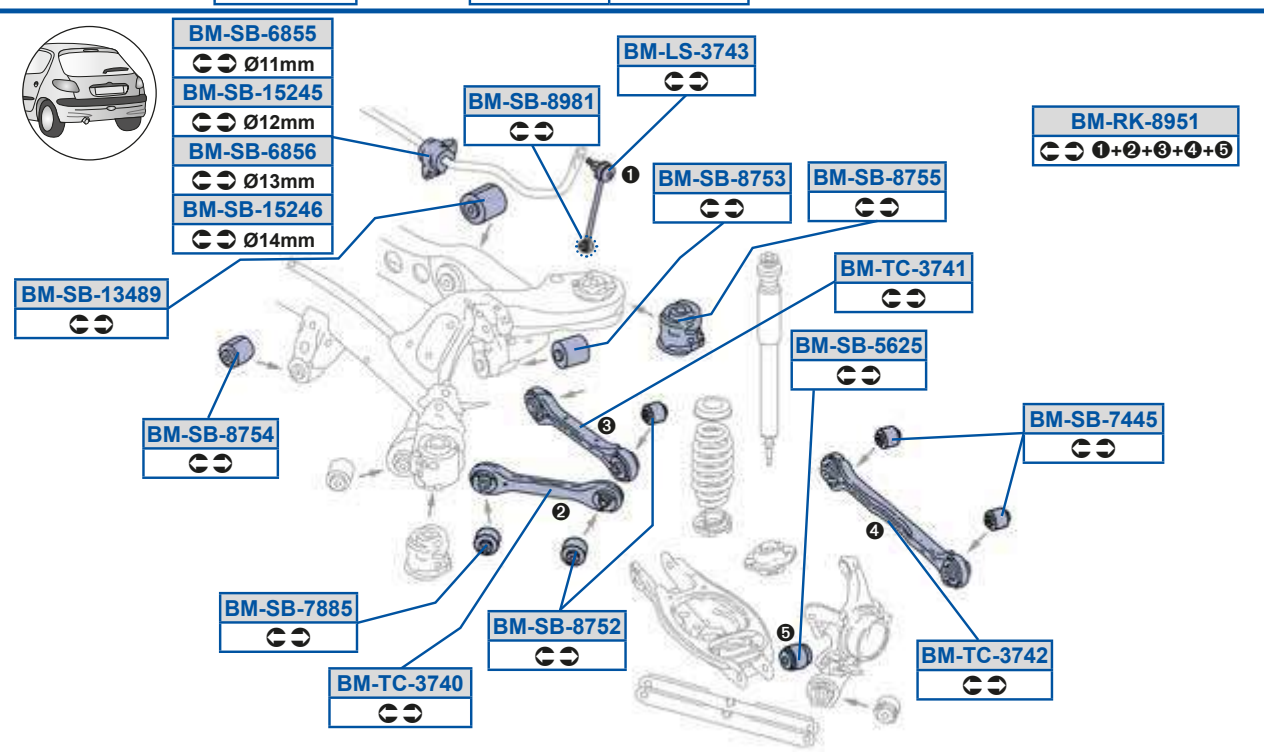

MOOG

P[5Oi 5AEA8
A998DED99BA

P[5Zd5AEBA
AACCDEDBB9F

P[5dP5AE>B
A8ACDEDCCEB

P[5dP5FEC>
AAA9DEDCCAC

P[5Oi 5AEA9
A987DEDC9AC3A987DEDC9AD

P[5c Y59C8E>
A998DED99BA

P[5dP5AEAB
A8897AGACB73A8897AGFAC7

P[5dP5FECA
AAA9DEDA7GA3AAA9DEE7F9G

P[5Sd5AE>F
A987DEDC7FG3A987DEDEEF8

P[5c Y59C8ED

P[5dP5AEAE
A889DEDADGG /40

P[5dP5FECB
AA8EDED79FE

P[5Sd5AE>G
A987DEDC7G73A987DEDEEF9

P[5c Y5FGC9

P[5dP5CD>C
AAA9DECD9BG3AAA9DEECCC9

P[5dP5FECC
AAA8DECF9D7

P[5Sd5FFFA
A987DEDG7EA3A987DEGAD9A

P[5c Y5FGEB
AAA9DEDCB9Co8

P[5dP5DFCC
AACADEDCCFB

P[5dP5FGF9
AACCDEDBB9F /40

P[5Sd5FFFB
A987DEDG7EB3A987DEGAD9B

P[5dP59ABFG
AA8EDED79FF3AA8EDEE7FDD

P[5dP5DFCD
AACCDED8779

P[5dP5GCE9
A8AA87G8E7G3A8AA87GBD8D

P[5dP59C>BC
AACCDED8778

P[5Zd5AE>C
A8ACDEDCGAA

P[5dP5EBBC
AAA9DEDA7G9

P[5eQ5AEA>
A889B7AD9DG3A889DEDAE7A

P[5dP59C>BD
AACCDED8CDF

P[5Zd5AE>E
A8ACDEDCGAB

P[5dP5EFFC
AAA9DEDCCAB

P[5eQ5AEAA
A889B7AD9E73A889DEDAE7B

P[h

9 0SF91	8G78D 9; 799	9 0SFE1	8A78A 8G79;
9 Q x áu x 0SFF1	8A78F 9; 79A	9 Q x 0SF; 1	9878D 9879A

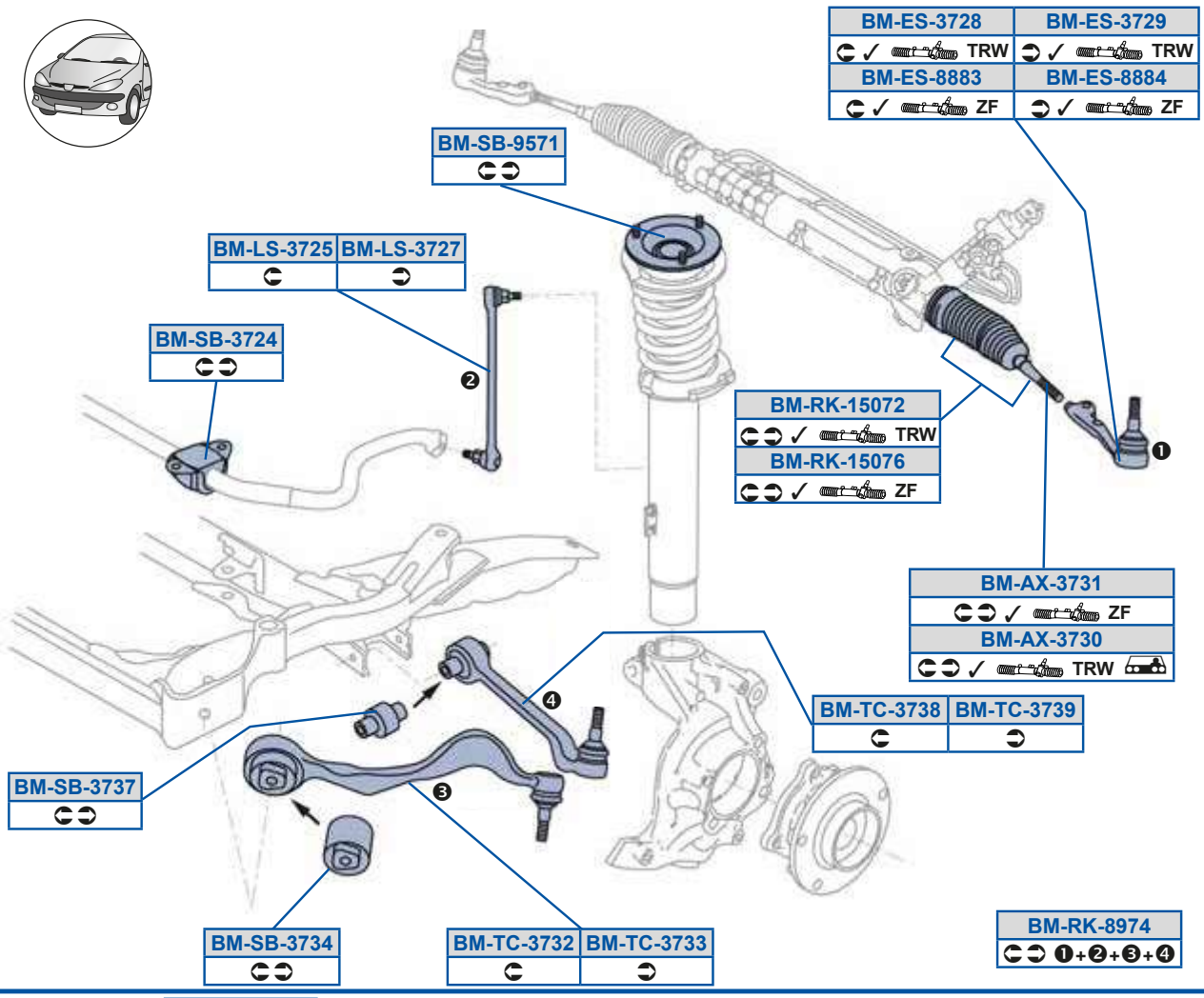

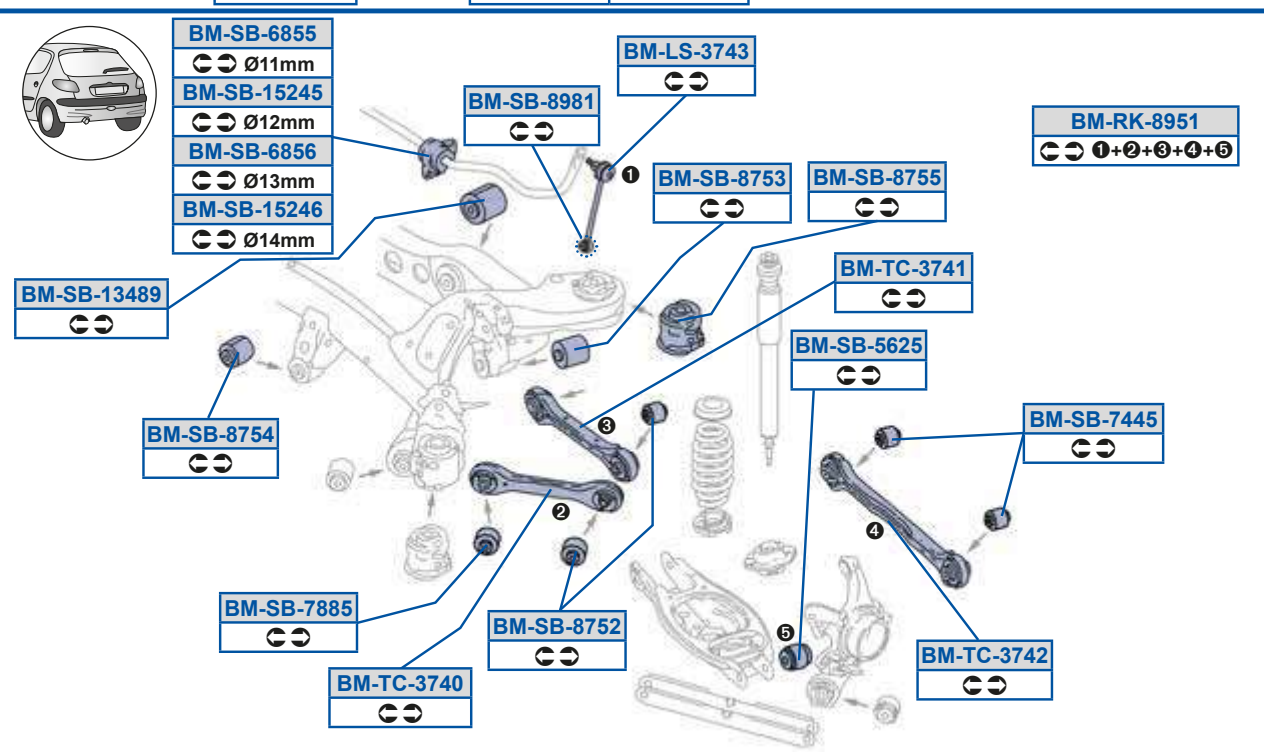

MOOG

P[5eQ5AEAF
A889DEDADGG3A889DEDGEGA

P[5eQ5AEAG
A8899B7CFD73A889DEDAE77

P[5eQ5AEB8
AAA9DEDCB9C

P[5eQ5AEB9
AAA9DEDABEA3AAA9DEEEGF7

P[5eQ5AEB>
AAA9DEDABE8

9 0T; 81	99798	9 0T; 91	9; 799

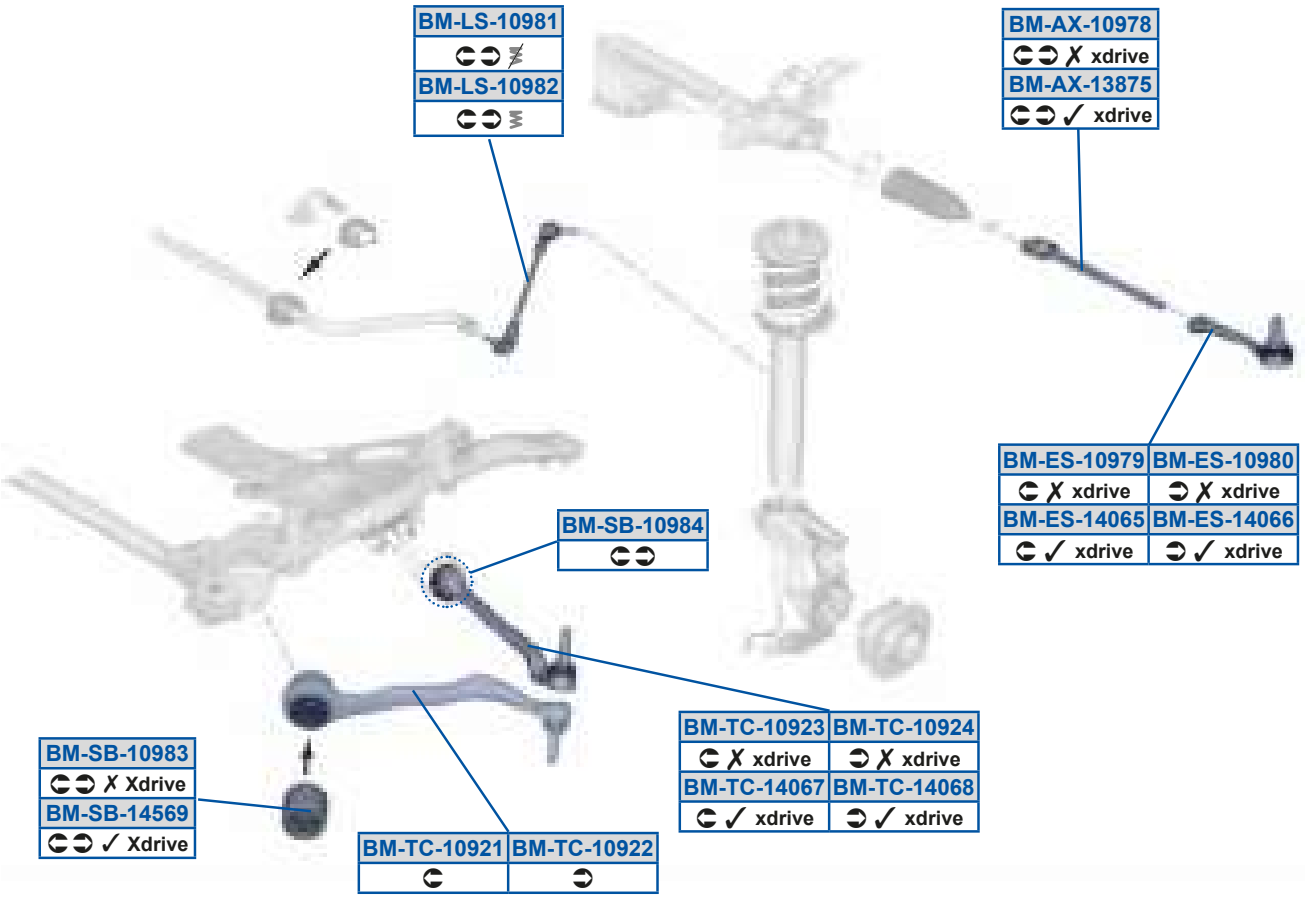

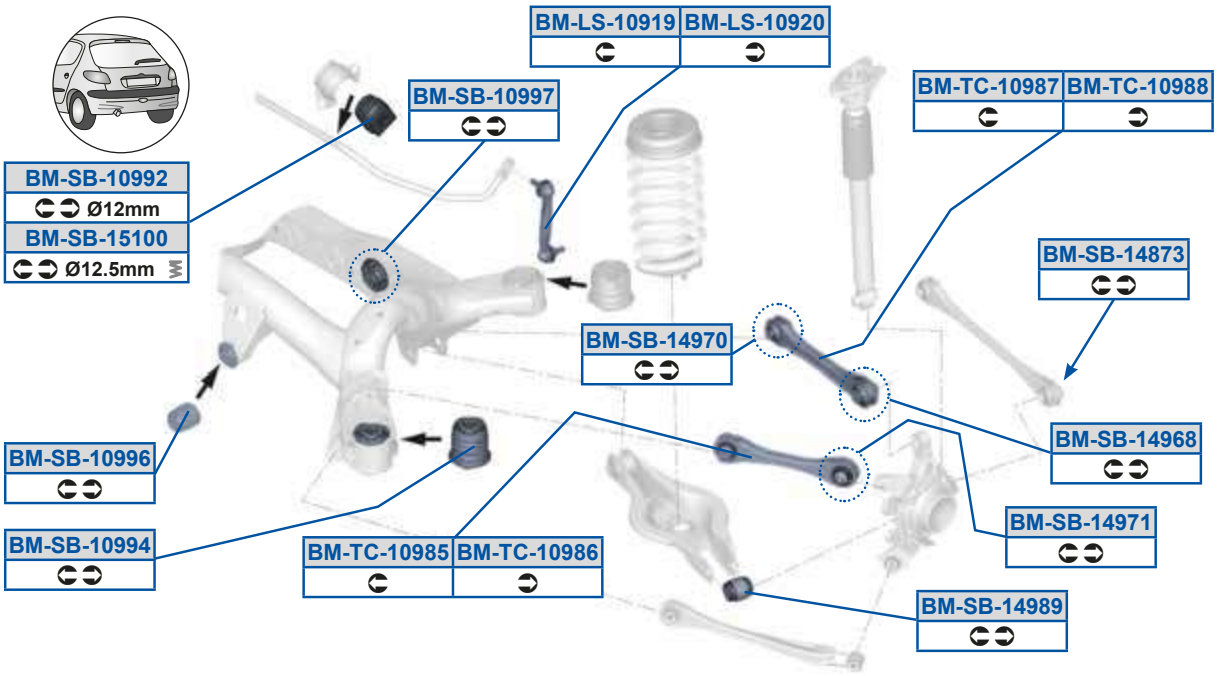

P[5Oi 598GEF
A887DEGGGD7 /40

P[5Zd598GF9
A8A7DEG9988

P[5dP59BCDG
A889DFCBE9G

P[5eQ598G>A
A889DFC9GG8

P[5Oi 59AFEC
A987DEG979G /40

P[5Zd598GF>
A8A7DEG9989

P[5dP59BFEA
AAA9DEG9CAA /40

P[5eQ598G>B
A889DFC9GG9

P[5Sd598GEG
A987DEGGGDD

P[5dP598GFA
A889DFC89CC3A889DFCCEBA

P[5dP59BGDF
AAA9DEG9CBA /40

P[5eQ598GFC
AAA9DEG9CAG

P[5Sd598GF8
A987DEGGGDE

P[5dP598GFB
A889DFC9GG8 /40

P[5dP59BGE8
AAA9DEG9CAG /40

P[5eQ598GFD
AAA9DEG9CB7

P[5Sd59B8DC
A987DEGED8E

P[5dP598GG>
AAACDEG98GD

P[5dP59BGFG
AAA9DEG9CB8 /40

P[5eQ598GFE
AAA9DEG9CBA

P[5Sd59B8DD
A987DEGED8F

P[5dP598GGB
AAA8DEG9C7G

P[5dP59C988
AAACDEG98GE

P[5eQ598GFF
AAA9DEG9CBB

P[5Zd598G9G
AAC7DEFCD7E

P[5dP598GGD
AAA8DEG9C8A

P[5eQ598G>9
A889DFC89CG3A889DFCCEB8

P[5eQ59B8DE
A889DFCBE9E

P[5Zd598G>8
AAC7DEFCD7F

P[5dP598GGE

P[5eQ598G>>
A889DFCCEB9

P[5eQ59B8DF
A889DFCBE9F

P[h

; Q x éı x OT; A1	8A79B	; Q x OT; ; 1	9879;
; Q x OT; ; 4TFE1	8979B		

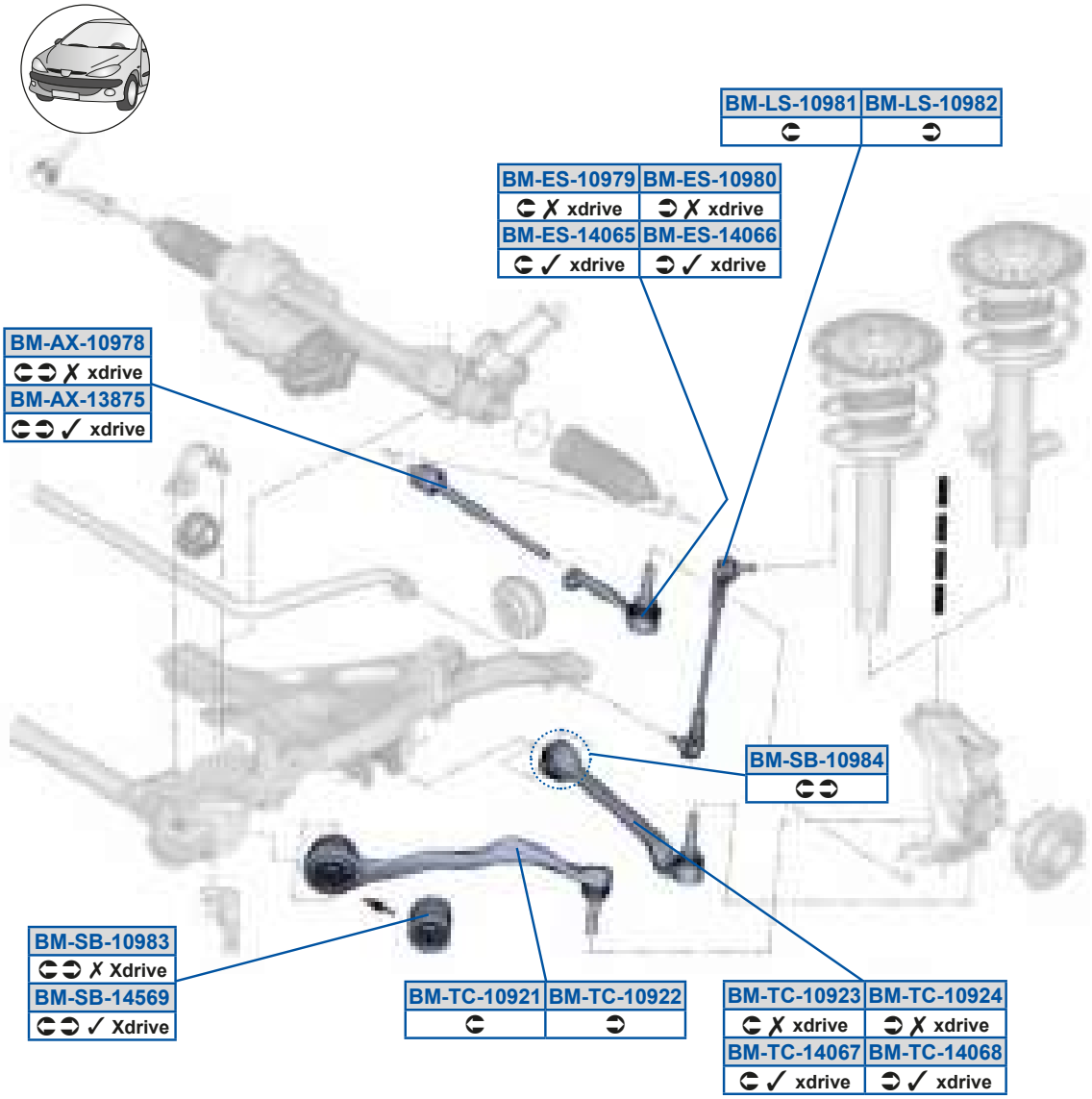

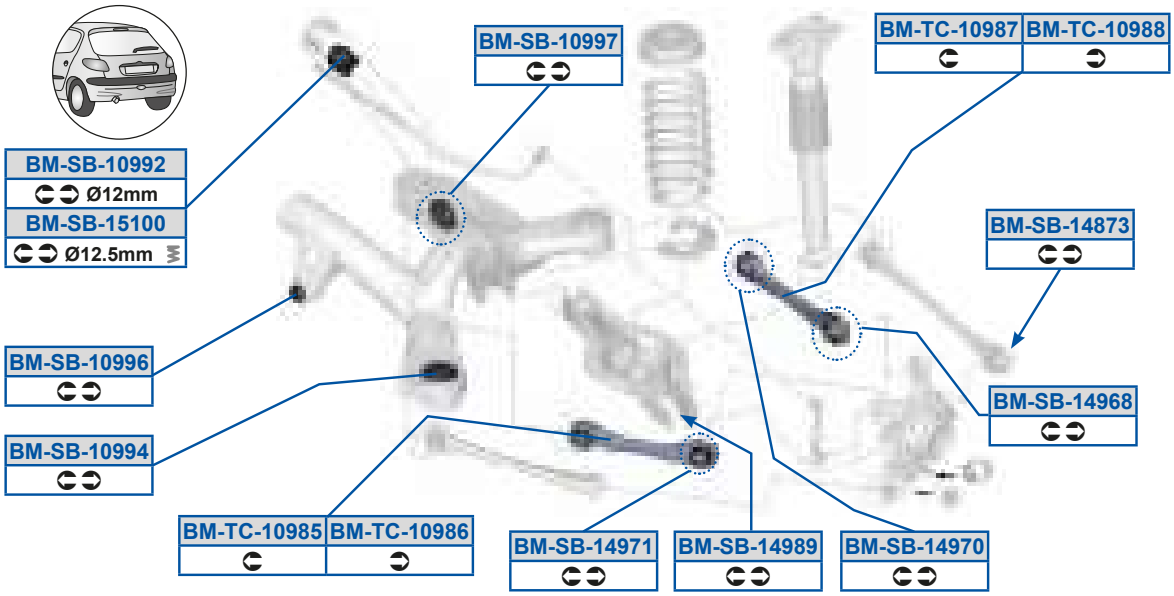

P[5Oi 598GEF
A887DEGGGD7 /40

P[5dP598GFA
A889DFC89CC3A889DFCCEBA

P[5dP59BGDF
AAA9DEG9CBA /40

P[5eQ598GFC
AAA9DEG9CAG

P[5Oi 59AFEC
A987DEG979G /40

P[5dP598GFB
A889DFC9GG8 /40

P[5dP59BGE8
AAA9DEG9CAG /40

P[5eQ598GFD
AAA9DEG9CB7

P[5Sd598GEG
A987DEGGGDD

P[5dP598GG>
AAACDEG98GD

P[5dP59BGFG
AAA9DEG9CB8 /40

P[5eQ598GFE
AAA9DEG9CBA

P[5Sd598GF8
A987DEGGGDE

P[5dP598GGB
AAA8DEG9C7G

P[5dP59C988
AAACDEG98GE

P[5eQ598GFF
AAA9DEG9CBB

P[5Sd59B8DC
A987DEGED8E

P[5dP598GGD
AAA8DEG9C8A

P[5eQ598G>9
A889DFC89CG3A889DFCCEB8

P[5eQ59B8DE
A889DFCBE9E

P[5Sd59B8DD
A987DEGED8F

P[5dP598GGE

P[5eQ598G>>
A889DFCCEB9

P[5eQ59B8DF
A889DFCBE9F

P[5Zd598GF9
A8A7DEG9988

P[5dP59BCDG
A889DFCBE9G

P[5eQ598G>A
A889DFC9GG8

P[5Zd598GF>
A8A7DEG9989

P[5dP59BFEA
AAA9DEG9CAA /40

P[5eQ598G>B
A889DFC9GG9

; Ov é x e x OTBC1	9979A	; U t e x OTBD1	8E79B

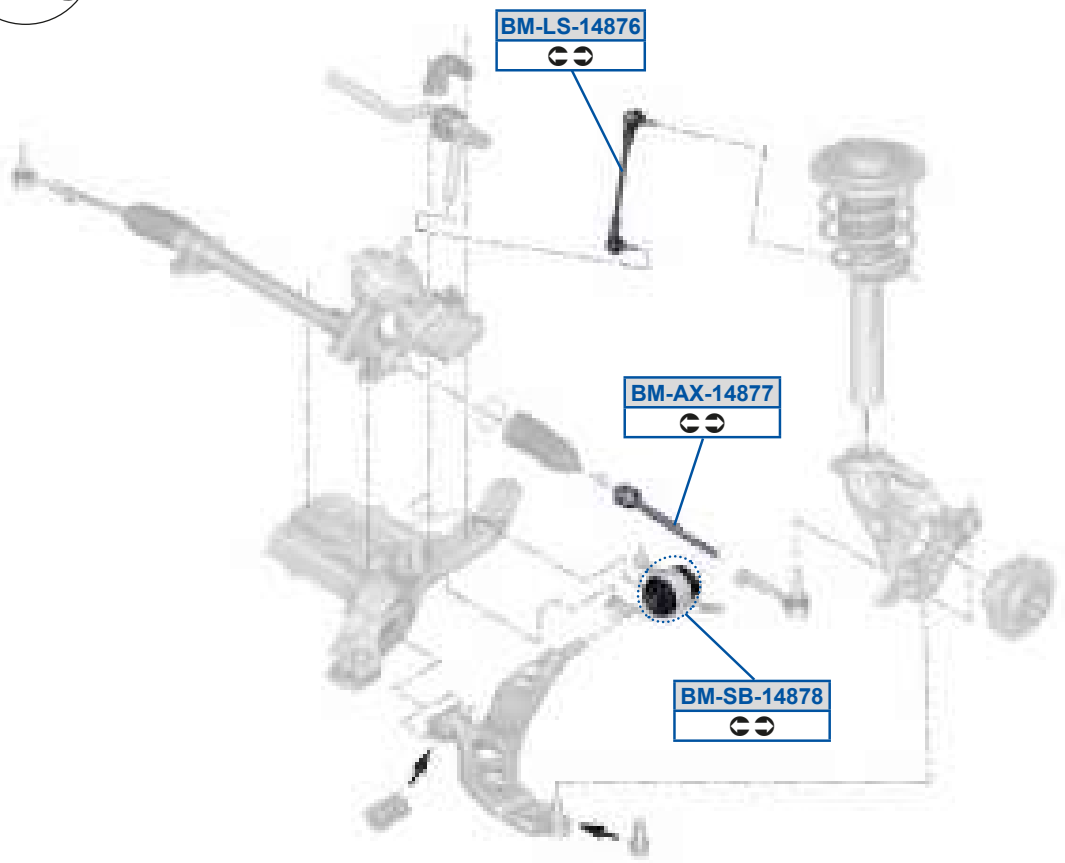

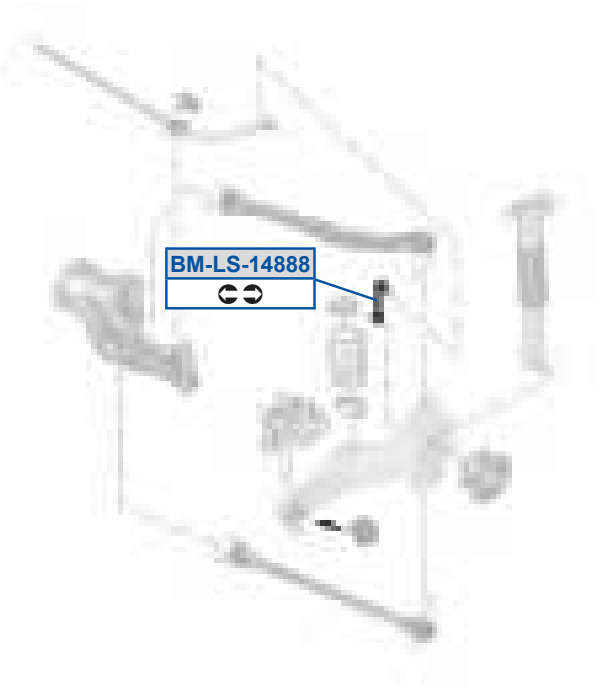

BM-SB-10994

BM-SB-10996

BM-SB-10997

BM-SB-14989

P[5Oi 59BFEE
A9 87 D FDE B7B /40

P[5Zd59BFED
A8A7DFD9FDB

P[5Zd59BFFF
AAC7DFD9FDC

P[5dP598GGB
AAA8DEG9C7G

P[5dP598GGD
AAA8DEG9C8A

P[5dP598GGE

P[5dP59BFEF
A889DFC7AGE /40

P[5dP59BGFG
AAA9DEG9CB8 /40

P[h

A 0SAD1	8G7G8 8; 7GF	A Q t v 0SAD1	8A7GB 8F788
A Q x éu x 0SAD1	8A7GA 8B7GG	A Q x 0SAD1	8A7G; 8B7GG
A e é ' 0SAD1	897GC 987GG	I A Q x 0SAD1	8B7GE 8D78A
I A c t w x 0SAD1	987GC 8978A		

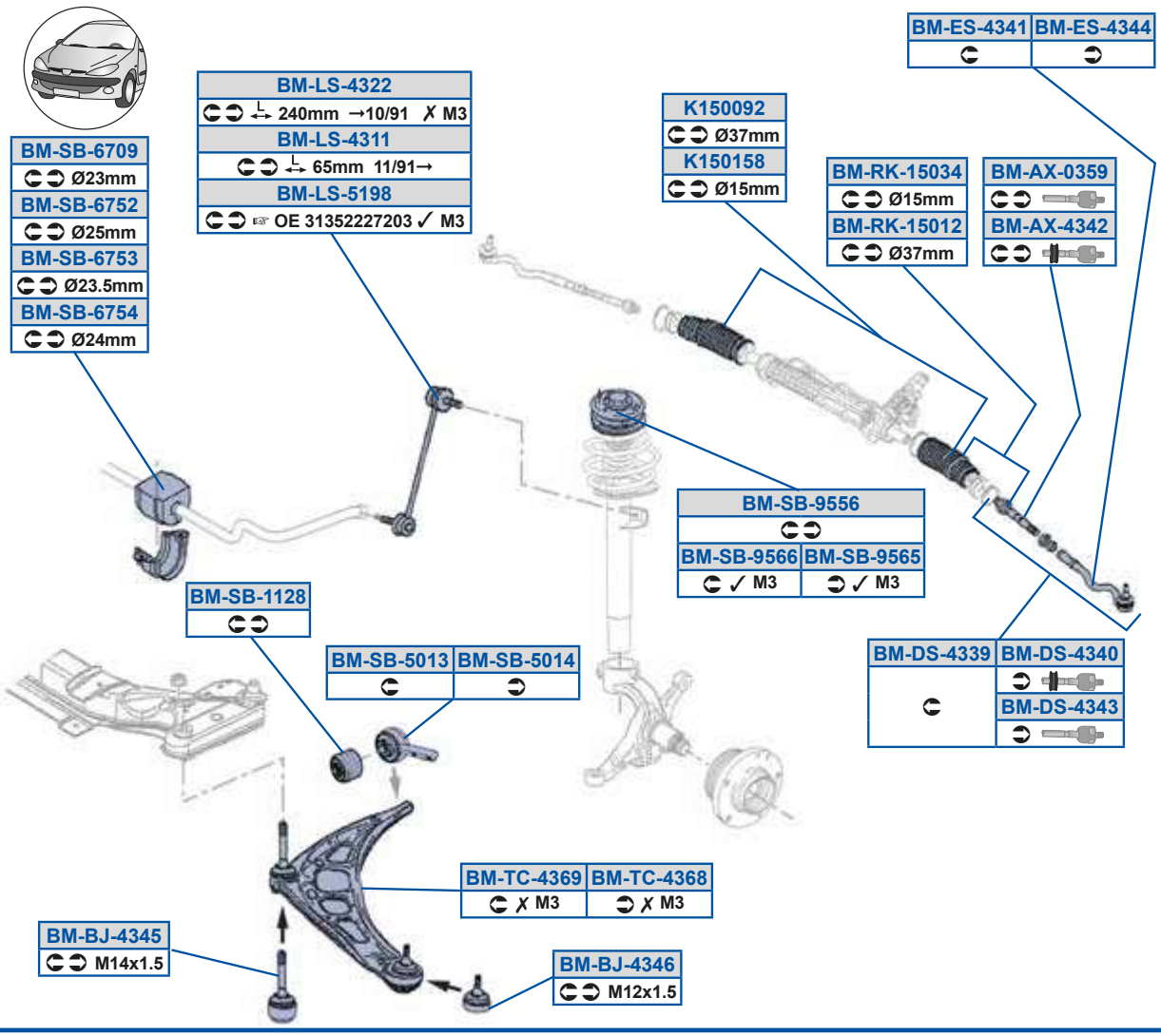

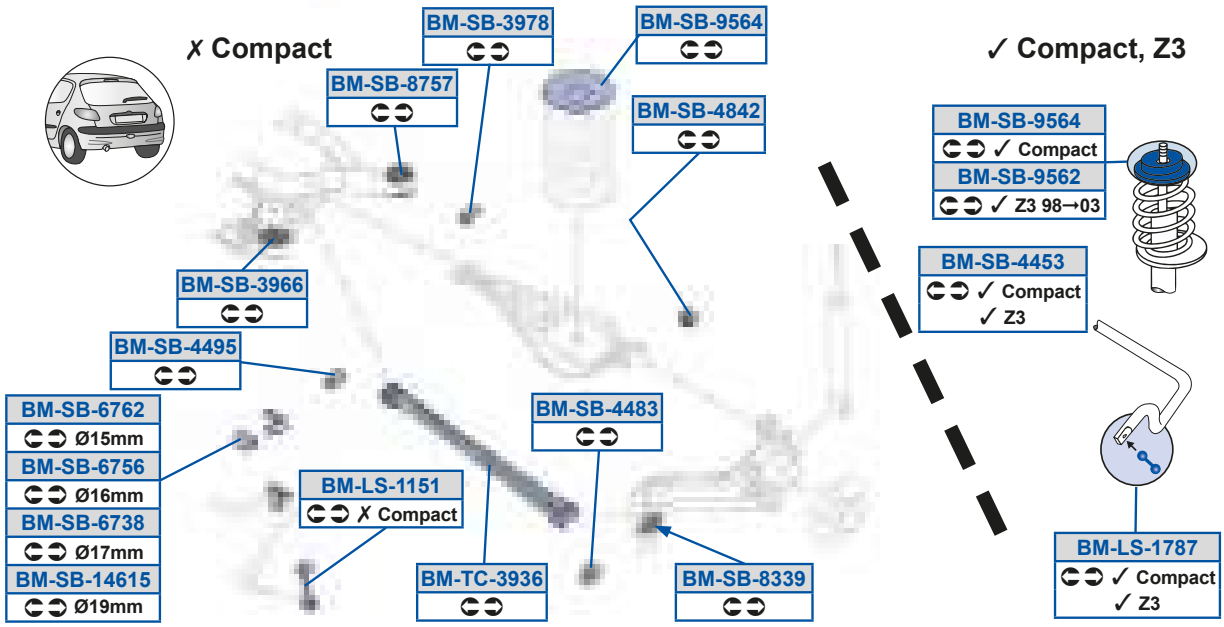

P[5Oi 58ACG
A98888AGA8F /40

P[5Sd5BABB
A98888AGA8B

P[5dP59BD9C
AACC87GBCC8

P[5dP5C89B
A88988ADCA9

P[5Oi 5BAB>
A99887GCGCC

P[5Zd599C9
AACC889BAEC3AACC889DGA9

P[5dP5AGDD
AAA8G7CGA77

P[5dP5DE8G
A8AC88ACF7C

P[5PX5BABC
A88988AG8A8

P[5Zd59EFE
AACC88A88A83AACC88ACA7E

P[5dP5AGEF
AAA987G99BE3AAA988AECE8

P[5dP5DEAF
AACC88ADBG8

P[5PX5BABD
A88987GDDFC3A88988B7AGF

P[5Zd5BA99
A8AC87G8EDB3A8AC889EDFG

P[5dP5BBCA
AAA887G7GBD

P[5dP5DEC>
A8AC87G78FD

P[5Rd5BAAG
A98888AGA8C3A98888AGA8E

P[5Zd5C9GF
A8AC999E97A

P[5dP5BBFA
AAA988ADA883AAA9DEE8F9F

P[5dP5DECA
A8AC87G7FD73A8AC87G899F

P[5Rd5BAB8
A98888AGA8D

P[5cY59C89>
A99887GCGCC

P[5dP5BBGC
AAA987G99BF3AAA988AFAFA

P[5dP5DECB
A8AC87G79DA

P[5Rd5BABA
A98888AGA8F

P[5cY59C8AB

P[5dP5BFB>
AAA988AFE993AAA988B7ABC

P[5dP5DECD
AACC889GE77

P[5Sd5BAB9
A98888AGA8A

P[5dP599>F
A88988ACAC83A88988ACAC9

P[5dP5C89A
A88988ADCA8

P[5dP5DED>
AACC88A88CC

P[h

A 0SAD1	8G7G8 8; 7GF	A Q t v 0SAD1	8A7GB 8F788
A Q x éu x 0SAD1	8A7GA 8B7GG	A Q x 0SAD1	8A7G; 8B7GG
A e é ' 0SAD1	897GC 987GG	I A Q x 0SAD1	8B7GE 8D78A
I A c t w x 0SAD1	987GC 8978A		

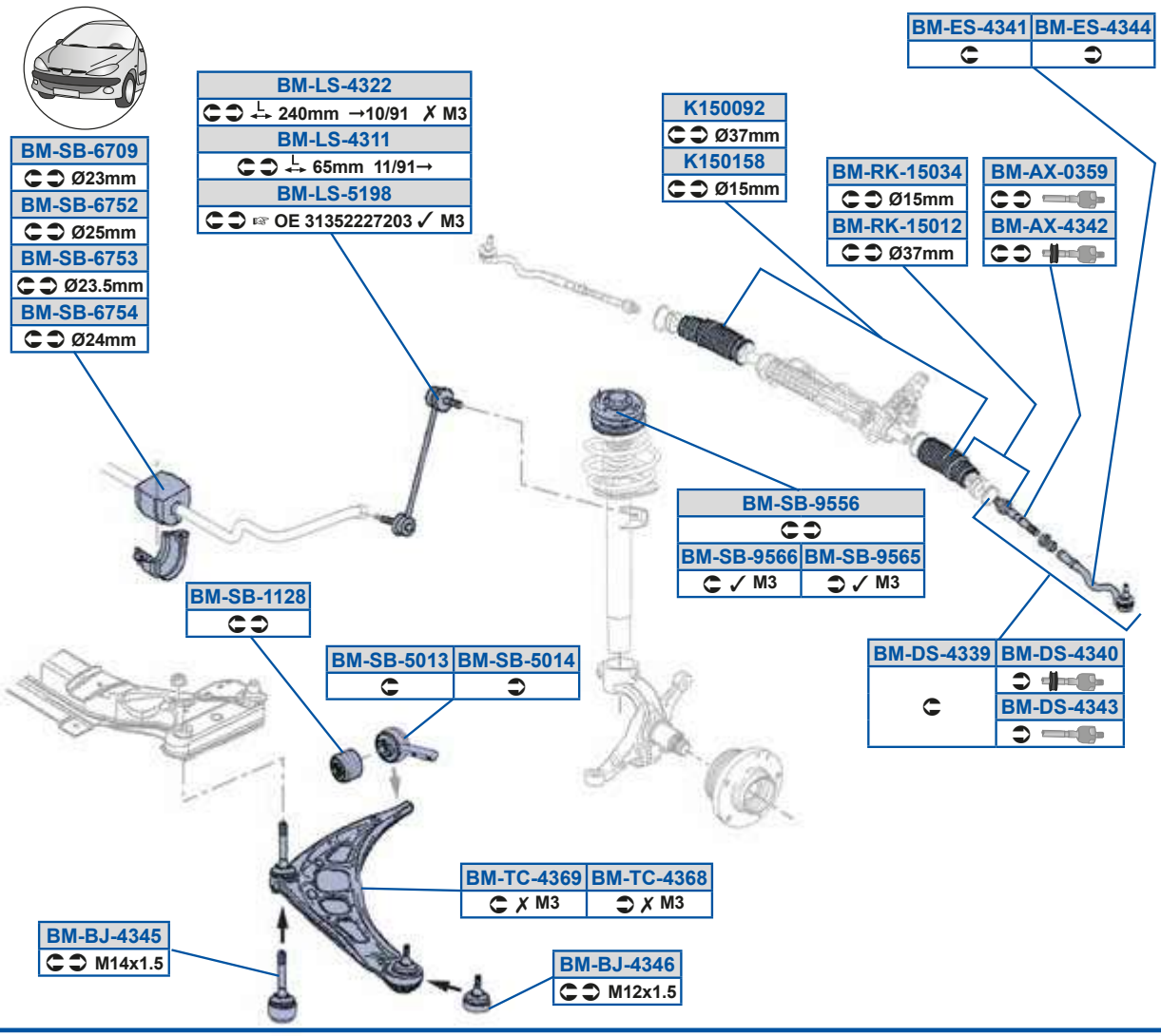

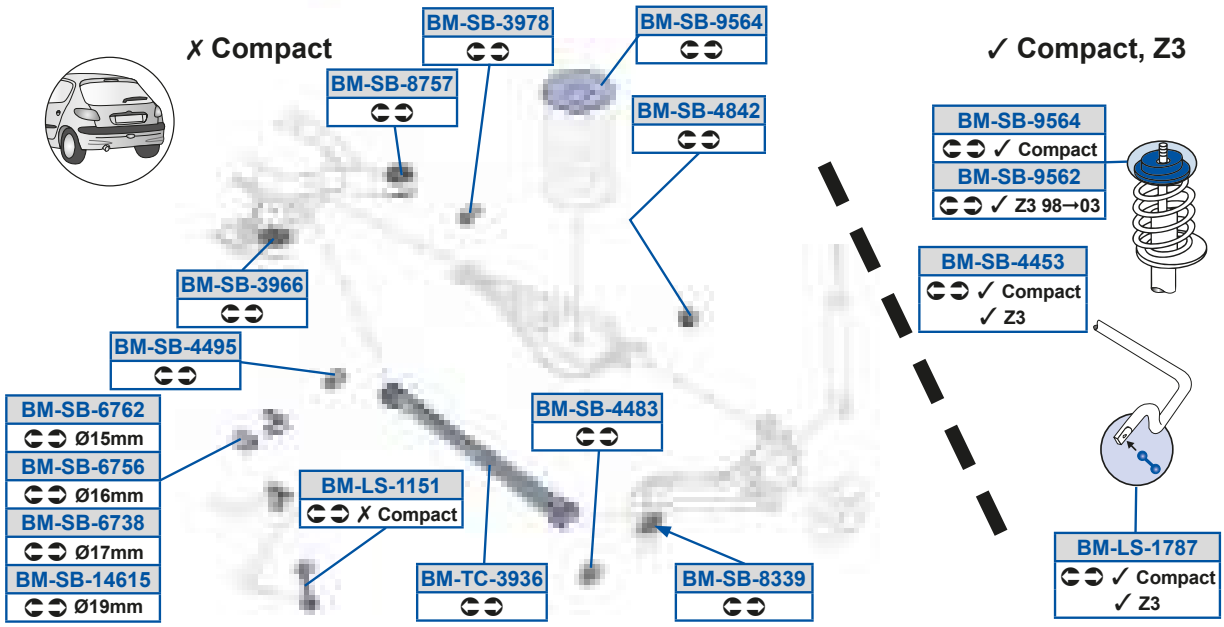

P[5dP5FAAG
AAA987GE77G3AAA988AEF7D

P[5dP5FECE
AAA8G7CGA78

P[5dP5GCCD
A8AA87G7BDE3A8AA87G9FFC

P[5dP5GCD>
AAC987G9AD93AAC9889FEAB

P[5dP5GCDB
AAC9889FF8G3AAC988A987B

P[5dP5GCDC
A8AA999EFGF

P[5dP5GCDD
A8AA999EFGE

P[5eQ5AGAD
AAA7AB88DC83AAA987G99AE

P[5eQ5BADF
A88987GB9ED3A88988ADCA7

P[5eQ5BADG
A88987GB9EC3A88988ADC9G

Y9C88G>
87GBGAA3A98A87GDG87

Y9C89CF
A98A87GDBDC

P[h

A OSBD1	8; 7GF 8B78C	A Q t v OSBD1	8A789 8; 78C
A Q x éu x OSBD1	8B788 9; 78E	A Q x OSBD1	8B7GG 8E78D
A e é ' OSBD1	987GG 8C78C	I B Q x OSFD1	8A78D 8978G
I B c t w x OSFC1	8; 78A 9; 78G		

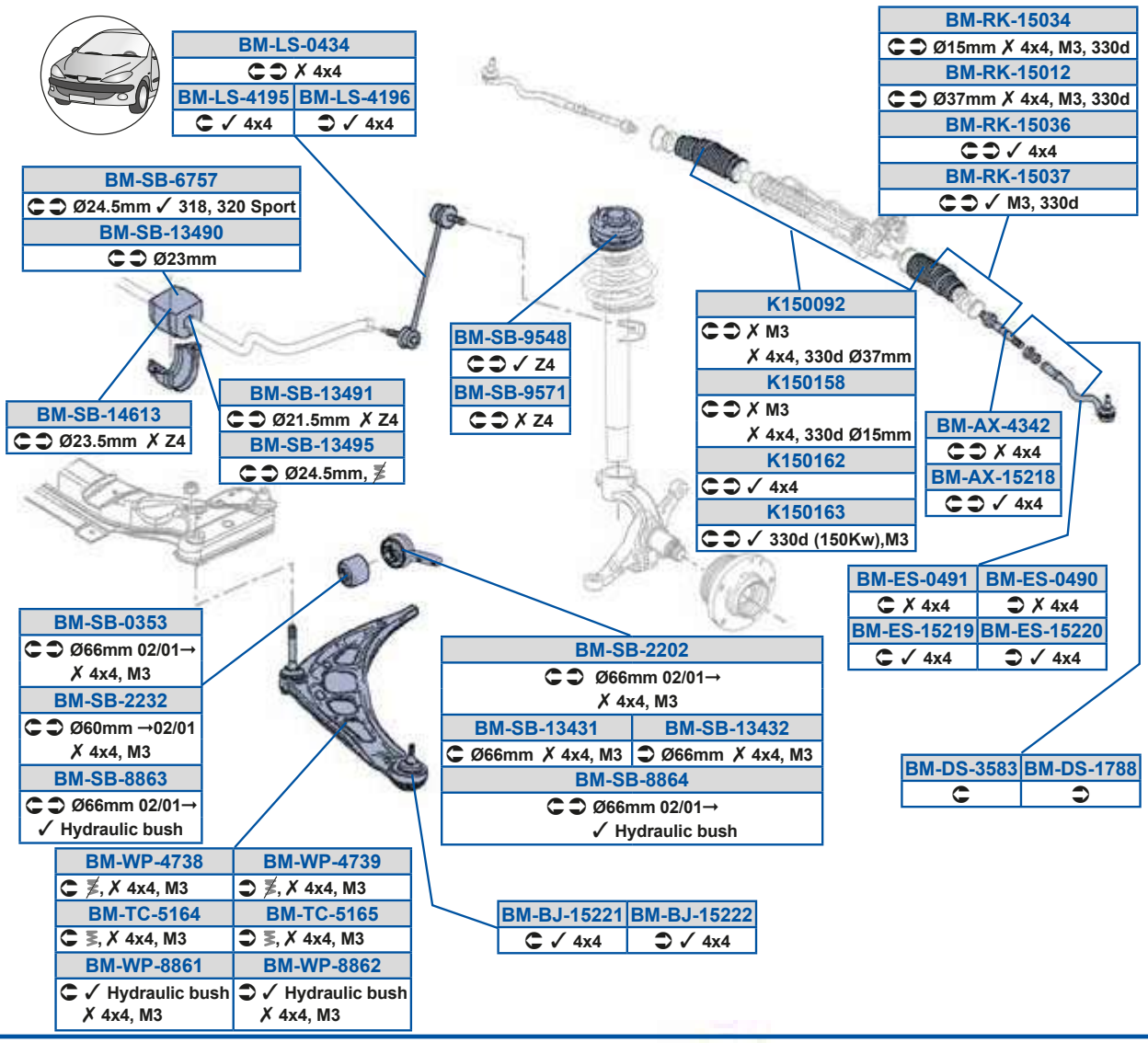

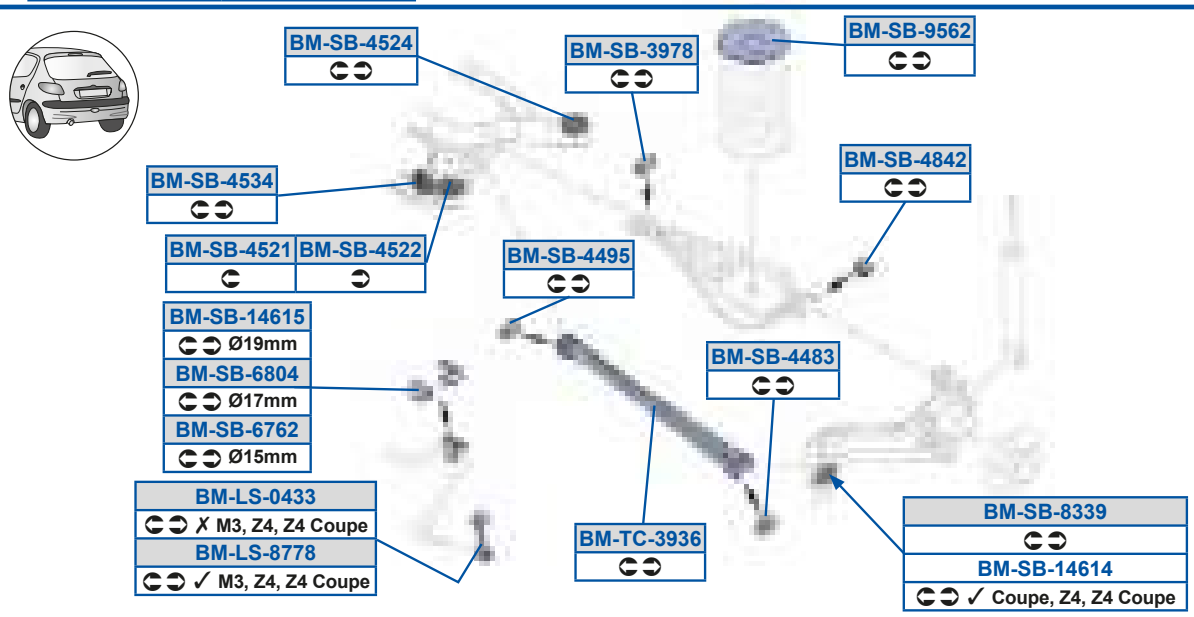

P[5Oi 59C>9F
A9 87 D EEB A8F

P[5Oi 5BAB>
A99887GCGCC

P[5PX59C>>9
A889DECDDGC

P[5PX59C>>>
A889DECDDGD

P[5Rd59EFF
A987DEEB99A3A987DEEEC7B

P[5Rd5ACFA
A987DEEB9993A987DEEEC7A

P[5Sd58BG8
A987DEEB9983A99887GCGCF

P[5Sd58BG9
A987DEEB9973A99887GCGCE

P[5Sd59C>9G

P[5Sd59C>>8
A987DEEBA98

P[5Zd58BAA
AACC87GBD8G

P[5Zd58BAB
A8AC7GCDGB3A8AC87GCDGB

P[5Zd5B9GC
A8ACDEC87EG

P[5Zd5B9GD
A8ACDEC87F7

P[5Zd5FEEF
AACC99F98F93AACC99FAEBA

P[5c Y59C89>
A99887GCGCC

P[5c Y59C8AB

P[5c Y59C8AD

P[5c Y59C8AE

P[5dP58ACA
A889DECED9A /40

P[5dP59ABA9
A889DECBFGG

P[5dP59ABA>
A889DECBG77

P[5dP59ABG8
A8AC87GE8EG

P[5dP59ABG9
A8AC87GBCCB

P[5dP59ABGC
A8AC87GBCCD

P[5dP59BD9A
AACCDEC89DG

P[5dP59BD9B
AAA9999F8CA3AAA9DECEFFC

P[5dP59BD9C
AACC87GBCC8

P[5dP5>>8>
A889DECBFGG3A889DECED9A

P[5dP5>>A>
A88887GDGF9

P[5dP5AGEF
AAA987G99BE3AAA988AECE8

P[5dP5BBFA
AAA988ADA883AAA9DEE8F9F

P[h

A OSBD1	8; 7GF 8B78C	A Q t v OSBD1	8A789 8; 78C
A Q x éu x OSBD1	8B788 9; 78E	A Q x OSBD1	8B7GG 8E78D
A e é ' OSBD1	987GG 8C78C	I B Q x OSFD1	8A78D 8978G
I B c t w x OSFC1	8; 78A 9; 78G		

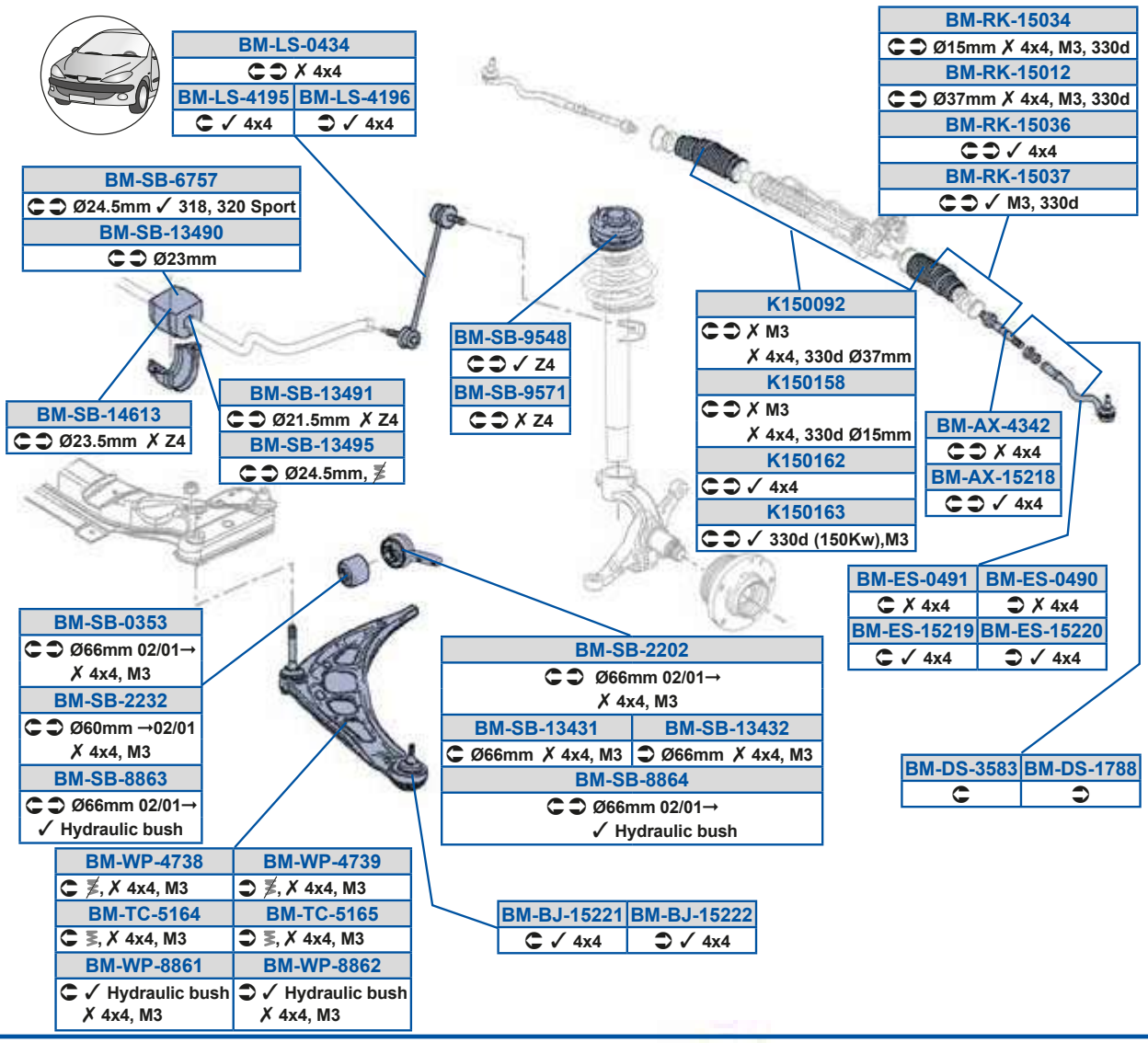

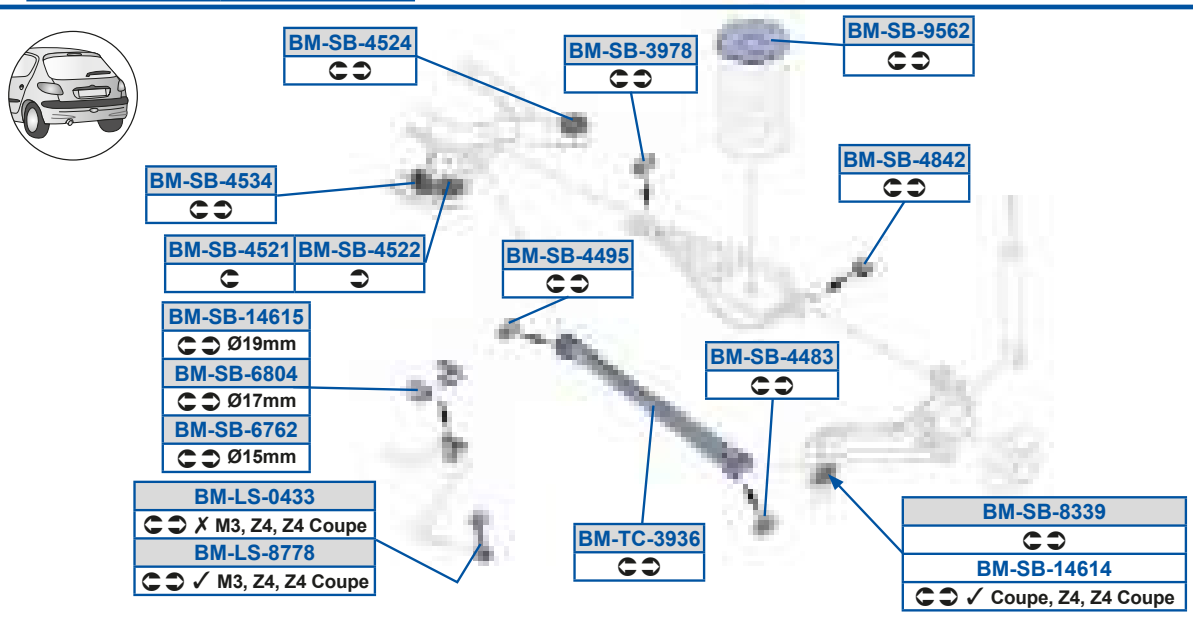

P[5dP5BBGC
AAA987G99BF3AAA988AFAFA

P[5dP5BC>9
AAA887G9C8C3AAA8DECEAGA

P[5dP5BC>>
AAA887G9C8D3AAA8DECEAGB

P[5dP5BC>B
AAA887G9C8E3AAA8DEE7EF8

P[5dP5BCAB
AA8E87GA8EC3AA8EDEE7EFF

P[5dP5BFB>
AAA988AFE993AAA988B7ABC

P[5dP5DECE
A8AC87GC9E8

P[5dP5DED>
AACC88A88CC

P[5dP5DF8B
AACC88AF87B

P[5dP5FAAG
AAA987GE77G3AAA988AEF7D

P[5dP5FFDA
A889DECED9A /40

P[5dP5FFDB
A889DECBFGG3A889DECED9A

P[5dP5GCBF
A8AADECAGDD

P[5dP5GCD>
AAC987G9AD93AAC9889FEAB

P[5dP5GCE9
A8AA87G8E7G3A8AA87GBD8D

P[5eQ5AGAD
AAA7AB88DC83AAA987G99AE

P[5eQ5C9DB
A88999F9898

P[5eQ5C9DC
A88999F98993A8899AB8F9F

P[5h a5BEAF
A88987GBBDC3A88987GDGFC

P[5h a5BEAG
A88987GBBDD3A88987GDGFD

P[5h a5FFD9
A88987GBBDC3A8899ABAACA

P[5h a5FFD>
A88987GBBDD3A8899ABAAC9

Y9C88G>
87GBGAA3A98A87GDG87

Y9C89CF
A98A87GDBDC

Y9C89D>
A98ADEC9BEF

Y9C89DA
A98A87GDG87

A 0SG81	8D78B 9; 799	A Q x áu x 0SGA1	8C78D 9; 79A
A Q x 0SG; 1	9978C 9; 79A	A e é ' 0SG91	9; 78B 8D79;

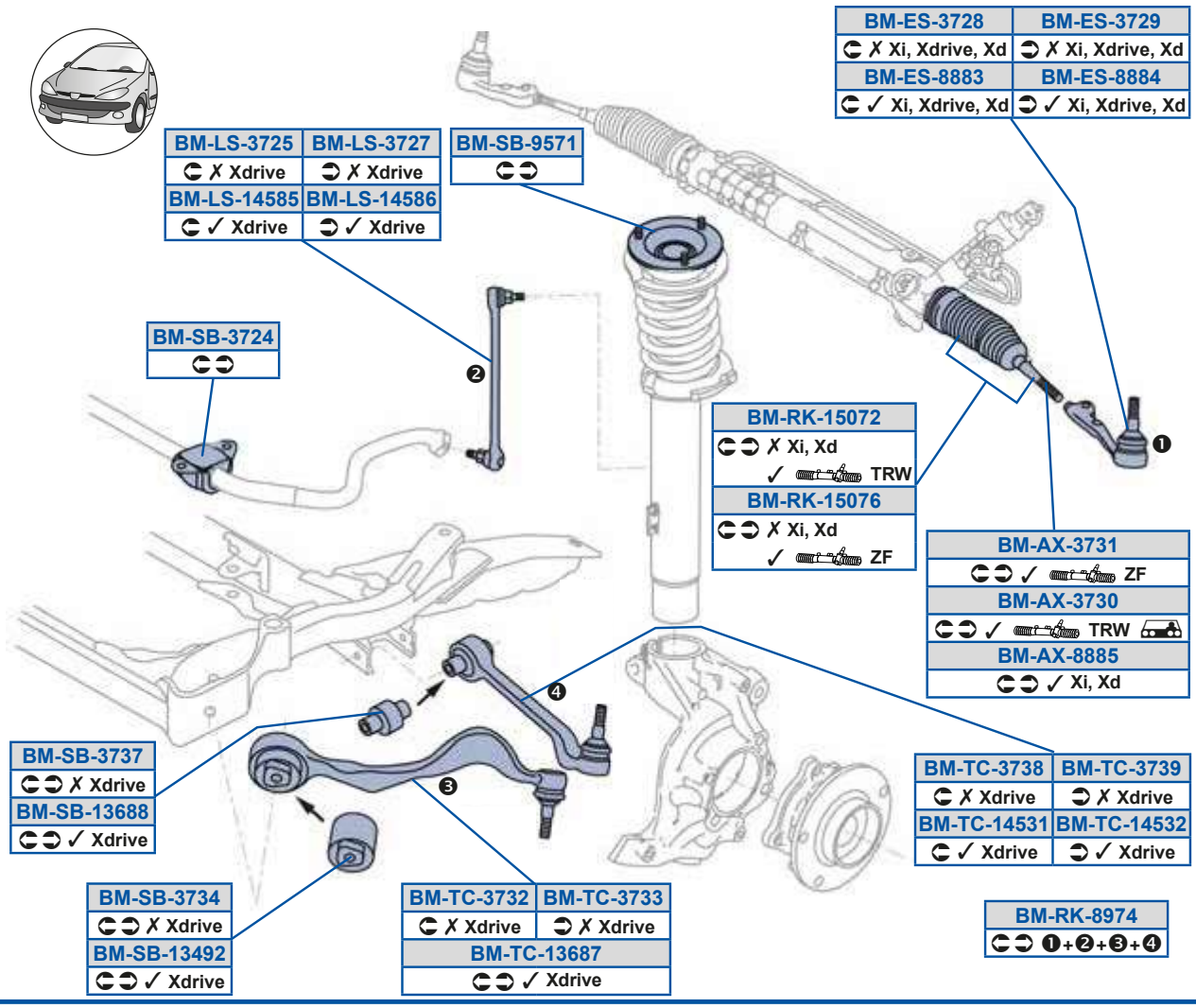

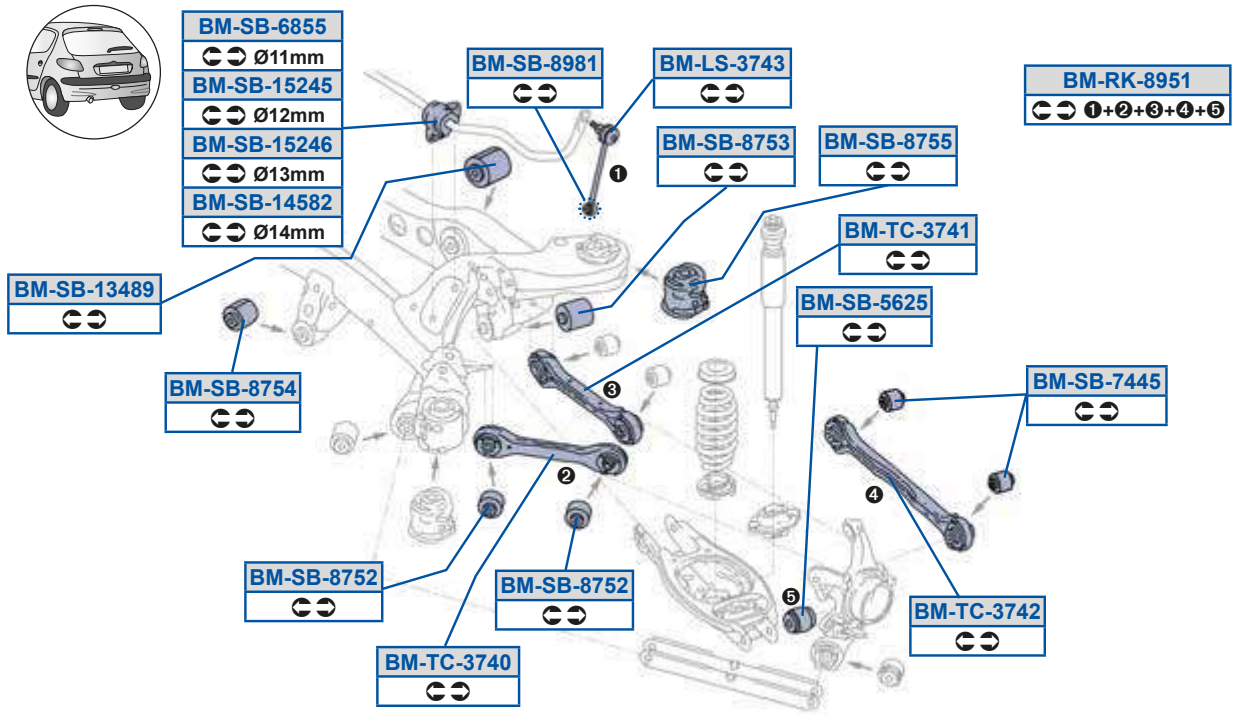

P[5Oi 5AEA8
A998DED99BA

P[5Oi 5AEA9
A987DEDC9AC3A987DEDC9AD

P[5Oi 5FFFC
A987DEGAD98 /40

P[5Sd5AE>F
A987DEDC7FG3A987DEDEEF8

P[5Sd5AE>G
A987DEDC7G73A987DEDEEF9

P[5Sd5FFFA
A987DEDG7EA3A987DEGAD9A

P[5Sd5FFFB
A987DEDG7EB3A987DEGAD9B

P[5Zd59BCFC
A8ACDEDFEE8

P[5Zd59BCFD
A8ACDEDFEE9

P[5Zd5AE>C
A8ACDEDCGAA

P[5Zd5AE>E
A8ACDEDCGAB

P[5Zd5AEBA
AACCDEDBB9F

P[5c Y59C8E>
A998DED99BA

P[5c Y59C8ED

P[5c Y5FGC9

P[5c Y5FGEB
AAA9DEDCB9Co8

P[5dP59ABFG
AA8EDED79FF3AA8EDEE7FDD

P[5dP59ABG>
A8897B87EG83A889DEDFF8F

P[5dP59ADFF
A889DEDFGFG /40

P[5dP59BCF>
AACCDED8AD7

P[5dP59C>BC
AACCDED8778

P[5dP59C>BD
AACCDED8CDF

P[5dP5AE>B
A8ACDEDCCEB

P[5dP5AEAB
A8897AGACB73A8897AGFAC7

P[5dP5AEAE
A889DEDADGG /40

P[5dP5CD>C
AAA9DECD9BG3AAA9DEECCC9

P[5dP5DFCC
AACADEDCCFB

P[5dP5EBBC
AAA9DEDA7G9

P[5dP5FEC>
AAA9DEDCCAC

P[5dP5FECA
AAA9DEDA7GA3AAA9DEE7F9G

P[5dP5FECB
AA8EDED79FE

P[5dP5FECC
AAA8DECF9D7

A 0SG81	8D78B 9; 799	A Q x áu x 0SGA1	8C78D 9; 79A
A Q x 0SG; 1	9978C 9; 79A	A e é ' 0SG91	9; 78B 8D79;

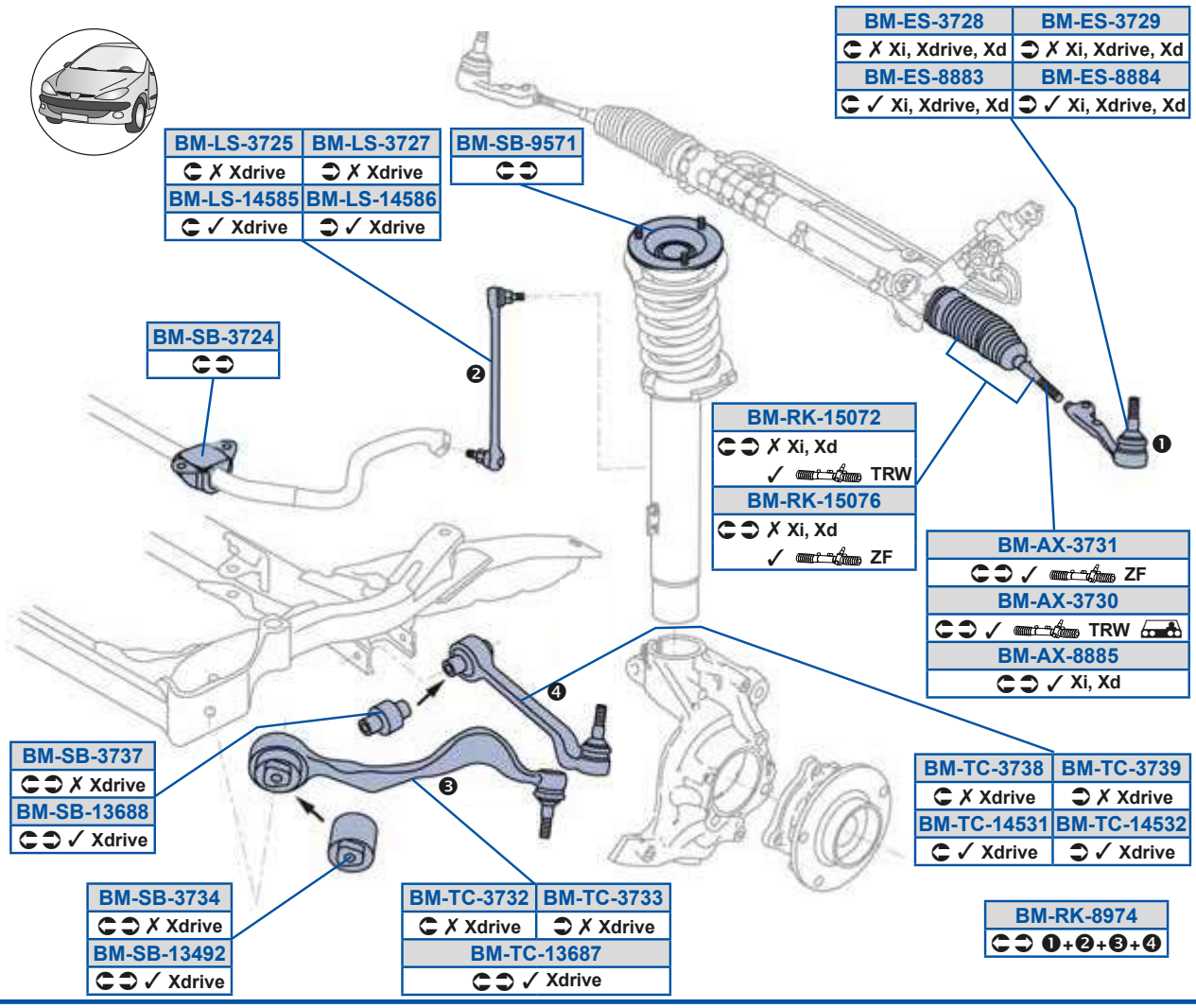

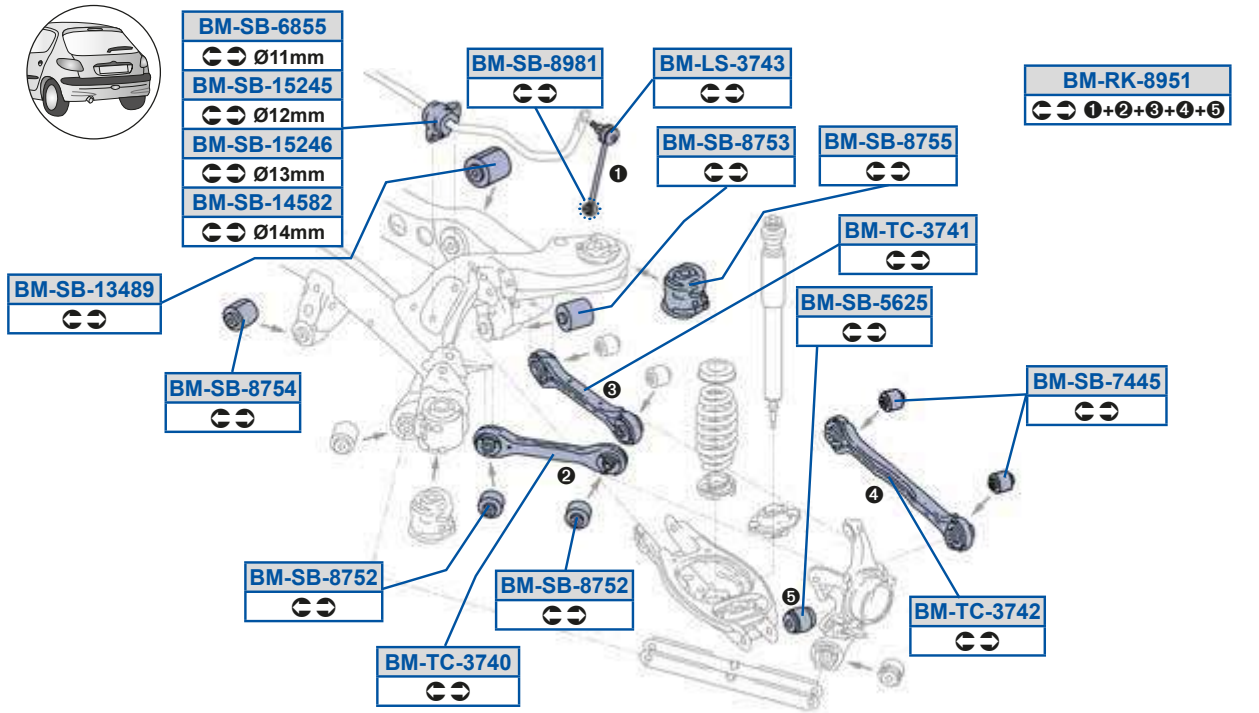

P[5dP5FGF9
AACCDEDBB9F /40

P[5dP5GCE9
A8AA87G8E7G3A8AA87GBD8D

P[5eQ59ADFE
A889DEDFGFG

P[5eQ59BCA9
A889DEDFGFA

P[5eQ59BCA>
A889DEDFGFB

P[5eQ5AEA>
A889B7AD9DG3A889DEDAE7A

P[5eQ5AEAA
A889B7AD9E73A889DEDAE7B

P[5eQ5AEAF
A889DEDADGG3A889DEDGEGA

P[5eQ5AEAG
A8899B7CFD73A889DEDAE77

P[5eQ5AEB8
AAA9DEDCB9C

P[5eQ5AEB9
AAA9DEDABEA3AAA9DEEEGF7

P[5eQ5AEB>
AAA9DEDABE8

A 0TA81	8A799	A U t e é 0TAB1	8E79;
A e é ' 0TA91	8E799		

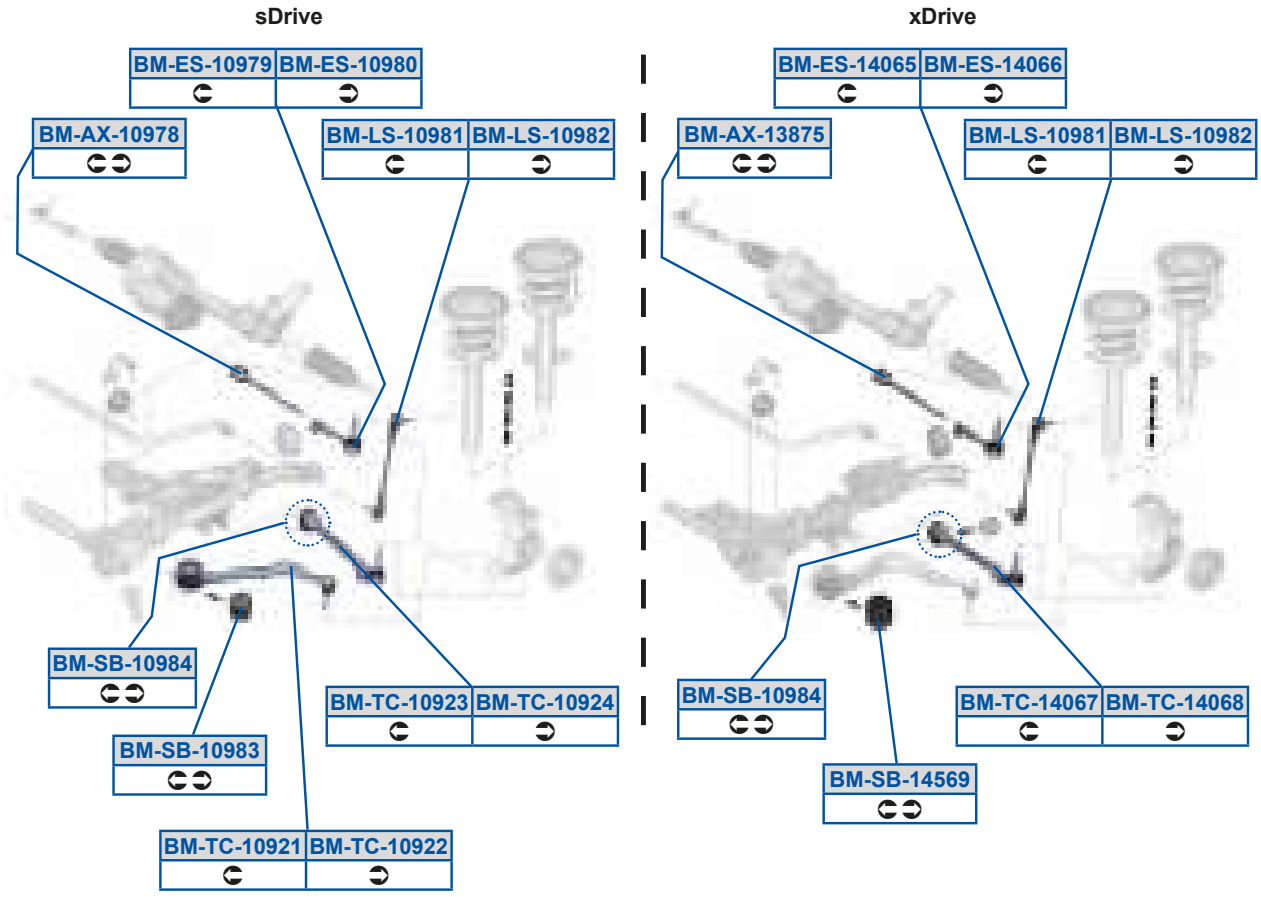

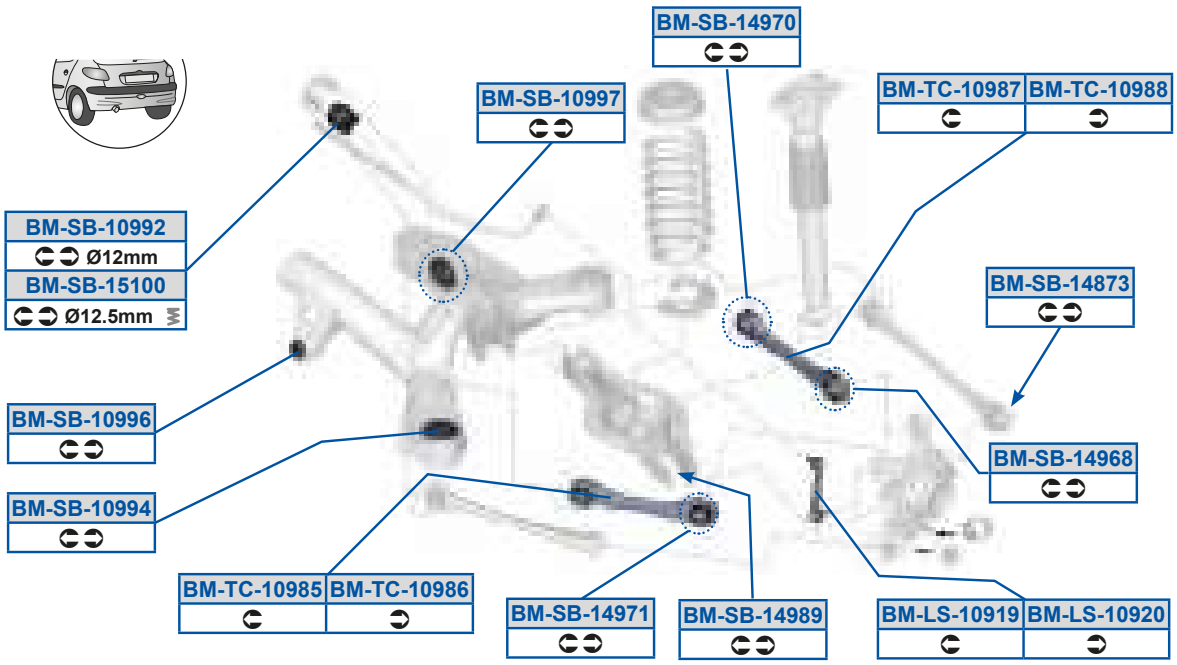

P[5Oi 598GEF
A887DEGGGD7 /40

P[5Zd598GF9
A8A7DEG9988

P[5dP59BCDG
A889DFCBE9G

P[5eQ598G>A
A889DFC9GG8

P[5Oi 59AFEC
A987DEG979G /40

P[5Zd598GF>
A8A7DEG9989

P[5dP59BFEA
AAA9DEG9CAA /40

P[5eQ598G>B
A889DFC9GG9

P[5Sd598GEG
A987DEGGGDD

P[5dP598GFA
A889DFC89CC3A889DFCCEBA

P[5dP59BGDF
AAA9DEG9CBA /40

P[5eQ598GFC
AAA9DEG9CAG

P[5Sd598GF8
A987DEGGGDE

P[5dP598GFB
A889DFC9GG8 /40

P[5dP59BGE8
AAA9DEG9CAG /40

P[5eQ598GFD
AAA9DEG9CB7

P[5Sd59B8DC
A987DEGED8E

P[5dP598GG>
AAACDEG98GD

P[5dP59BGFG
AAA9DEG9CB8 /40

P[5eQ598GFE
AAA9DEG9CBA

P[5Sd59B8DD
A987DEGED8F

P[5dP598GGB
AAA8DEG9C7G

P[5dP59C988
AAACDEG98GE

P[5eQ598GFF
AAA9DEG9CBB

P[5Zd598G9G
AAC7DEFCD7E

P[5dP598GGD
AAA8DEG9C8A

P[5eQ598G>9
A889DFC89CG3A889DFCCEB8

P[5eQ59B8DE
A889DFCBE9E

P[5Zd598G>8
AAC7DEFCD7F

P[5dP598GGE

P[5eQ598G>>
A889DFCCEB9

P[5eQ59B8DF
A889DFCBE9F

B Q x éı x 0TAA4TFA1	9879A	B Q x 0TA; 1	8E79A
B Q x 0TA; 4TF; 1	8E79A	B U t Q x 0TAD1	8A79B

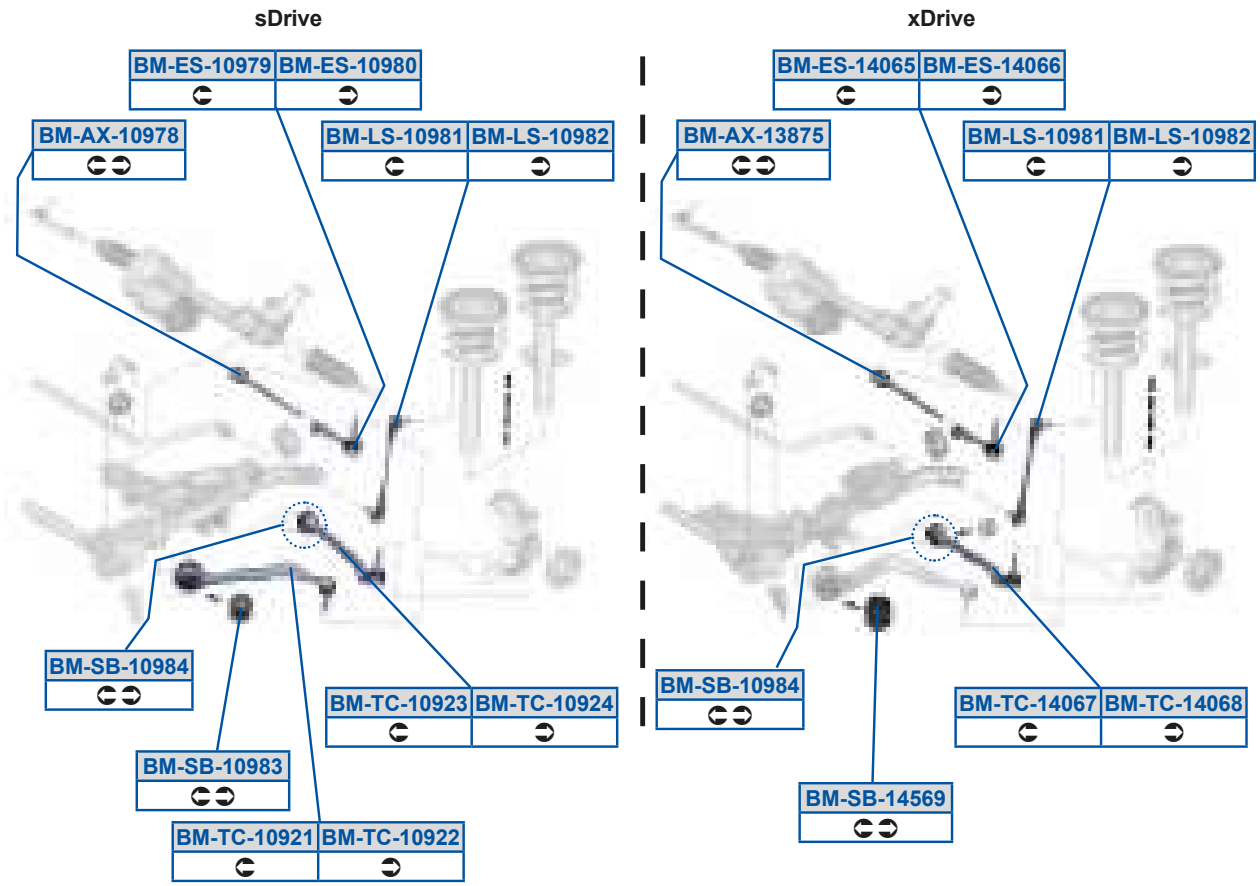

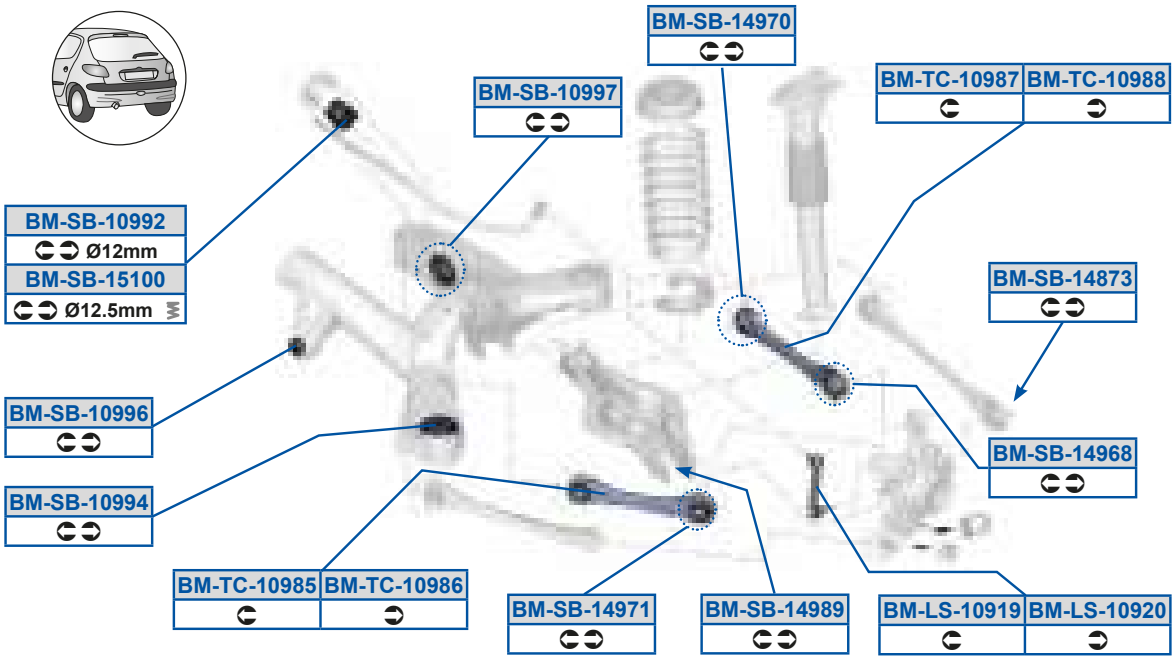

P[5Oi 598GEF
A887DEGGGD7 /40

P[5Zd598GF9
A8A7DEG9988

P[5dP59BCDG
A889DFCBE9G

P[5eQ598G>A
A889DFC9GG8

P[5Oi 59AFEC
A987DEG979G /40

P[5Zd598GF>
A8A7DEG9989

P[5dP59BFEA
AAA9DEG9CAA /40

P[5eQ598G>B
A889DFC9GG9

P[5Sd598GEG
A987DEGGGDD

P[5dP598GFA
A889DFC89CC3A889DFCCEBA

P[5dP59BGDF
AAA9DEG9CBA /40

P[5eQ598GFC
AAA9DEG9CAG

P[5Sd598GF8
A987DEGGGDE

P[5dP598GFB
A889DFC9GG8 /40

P[5dP59BGE8
AAA9DEG9CAG /40

P[5eQ598GFD
AAA9DEG9CB7

P[5Sd59B8DC
A987DEGED8E

P[5dP598GG>
AAACDEG98GD

P[5dP59BGFG
AAA9DEG9CB8 /40

P[5eQ598GFE
AAA9DEG9CBA

P[5Sd59B8DD
A987DEGED8F

P[5dP598GGB
AAA8DEG9C7G

P[5dP59C988
AAACDEG98GE

P[5eQ598GFF
AAA9DEG9CBB

P[5Zd598G9G
AAC7DEFCD7E

P[5dP598GGD
AAA8DEG9C8A

P[5eQ598G>9
A889DFC89CG3A889DFCCEB8

P[5eQ59B8DE
A889DFCBE9E

P[5Zd598G>8
AAC7DEFCD7F

P[5dP598GGE

P[5eQ598G>>
A889DFCCEB9

P[5eQ59B8DF
A889DFCBE9F

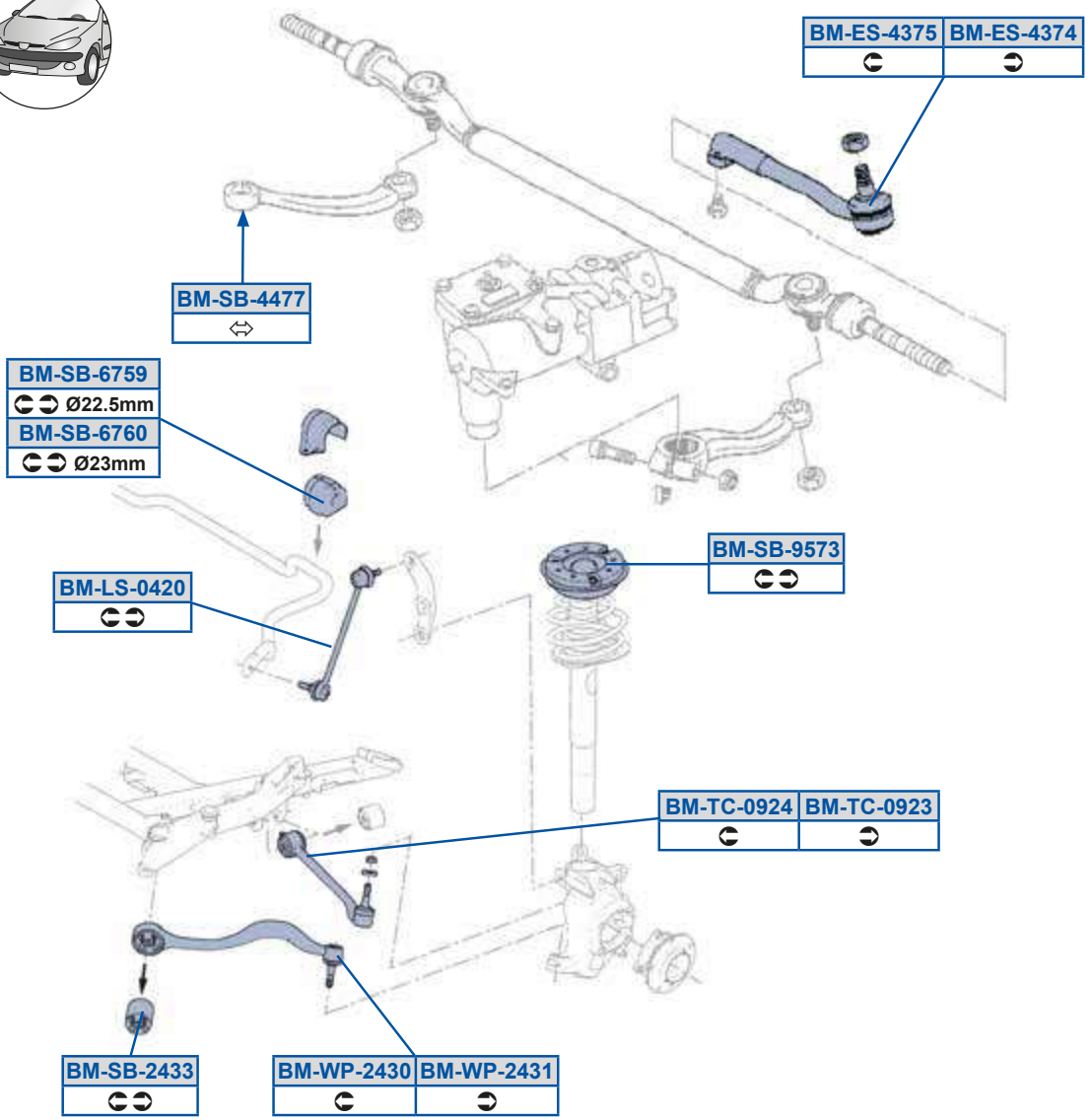
BM-ES-4375
BM-ES-4374
BM-SB-4477
BM-SB-6759
Ø22.5mm
BM-SB-6760
Ø23mm
BM-SB-9573
BM-LS-0420
BM-TC-0924
BM-TC-0923
BM-SB-2433
BM-WP-2430
BM-WP-2431

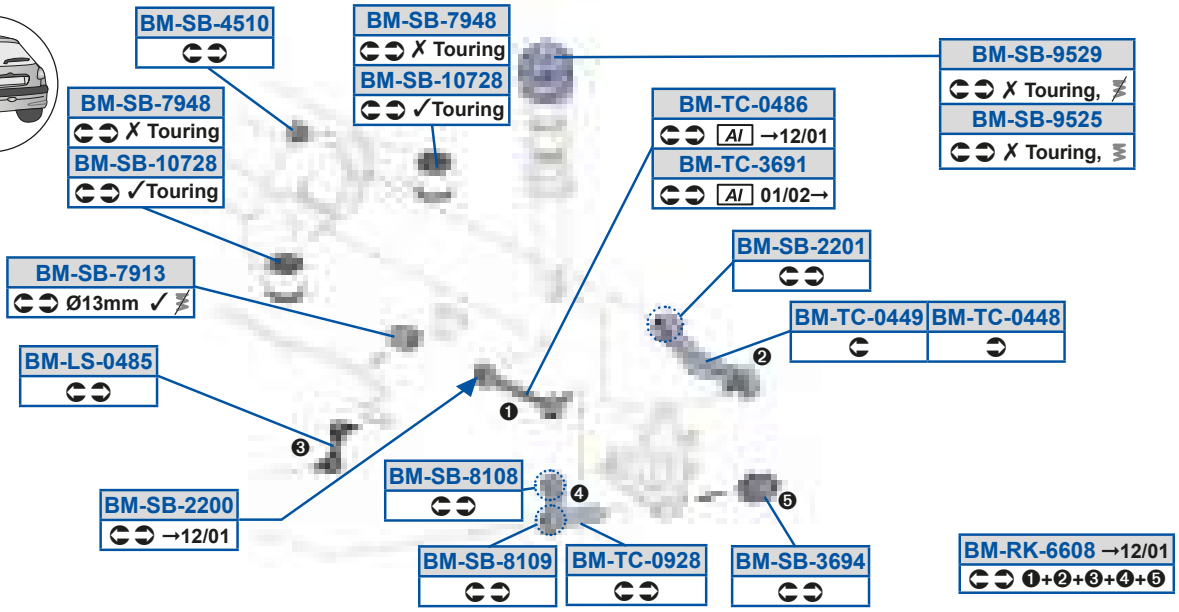
BM-SB-4510
BM-SB-7948
✗ Touring
BM-SB-10728
✓Touring
BM-SB-9529
✗ Touring,
BM-SB-9525
✗ Touring,
BM-SB-7948
✗ Touring
BM-SB-10728
✓Touring
BM-TC-0486
AI →12/01
BM-TC-3691
AI 01/02→
BM-SB-2201
BM-SB-7913
Ø13mm ✓
BM-TC-0449
BM-TC-0448
BM-LS-0485
BM-SB-8108
BM-SB-2200
→12/01
BM-SB-8109
BM-TC-0928
BM-SB-3694
BM-RK-6608 →12/01
❶+❷+❸+❹+❺

P[5Sd5BAEB
A99887G8E9B3AA8887GAEE9

P[5Sd5BAEC
A98887GAEE83A99887G8E9A

P[5Zd58B>8
A8AC87G9A7B3A8AC87GCDDB

P[5Zd58BFC
AACC87G99G93AACC87GCCA9

P[5cY5DD8F

P[5dP598E>F
AAA887GB7AD

P[5dP5>>88
AAA987G7879

P[5dP5>>89
AAA987GB97G

P[5dP5>BAA
A889777DBF93A88988B8EC9

P[5dP5ADGB
AAA987G7C7B3AAA987GCDA8

P[5dP5BBEE
A998889GF7E3A99888AADGF

P[5dP5BC98
AA8E87GA77F

P[5dP5DECG
A8AC87GA87F

P[5dP5DED8
A8AC87GB8BC

P[5dP5EG9A
AACC87GADDA

P[5dP5EGBF
AAA887G8B99

P[5dP5F98F
AAA987G8D97 /40

P[5dP5F98G
AAA987G8D97 /40

P[5dP5GC>C
AAC987G89AF3AAC987GB7G8

P[5dP5GC>G
AAC987G8E87

P[5dP5GCEA
A8AA87G8E7F

P[5eQ58BBF
AAA987G7F8D3AAA9DEDEFA9

P[5eQ58BBG
AAA987G7F8C3AAA9DEDEFA8

P[5eQ58BFD
AAA987G7EBC3AAA987GE9DB

P[5eQ58G>A
A88988B8GD9

P[5eQ58G>B
A88988B8GD8

P[5eQ58G>F
AAA987G77A73AAA987G8D97

P[5eQ5ADG9
AAA97A77GBD3AAA97AGFAD8

P[5h a5>BA8
A88987G9D7G3A88987G9F8G

P[5h a5>BA9
A88987G9D873A88987G9F97

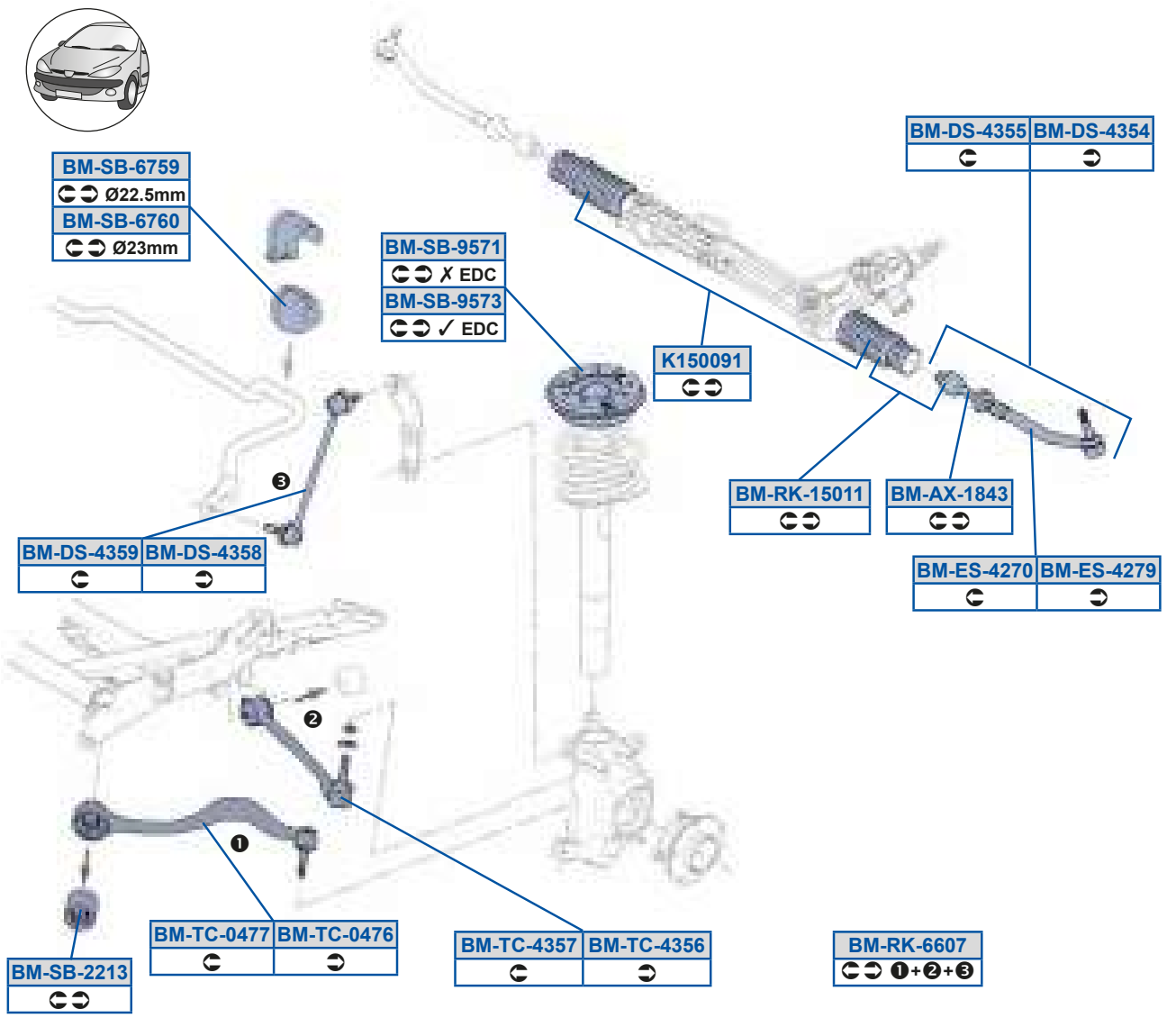
BM-SB-6759
Ø22.5mm
BM-SB-6760
Ø23mm
BM-SB-9571
✗ EDC
BM-SB-9573
✓ EDC
BM-DS-4355
BM-DS-4354
K150091
BM-RK-15011
BM-AX-1843
BM-ES-4270
BM-ES-4279
BM-DS-4359
BM-DS-4358
BM-SB-2213
BM-TC-0477
BM-TC-0476
BM-TC-4357
BM-TC-4356
BM-RK-6607
❶+❷+❸

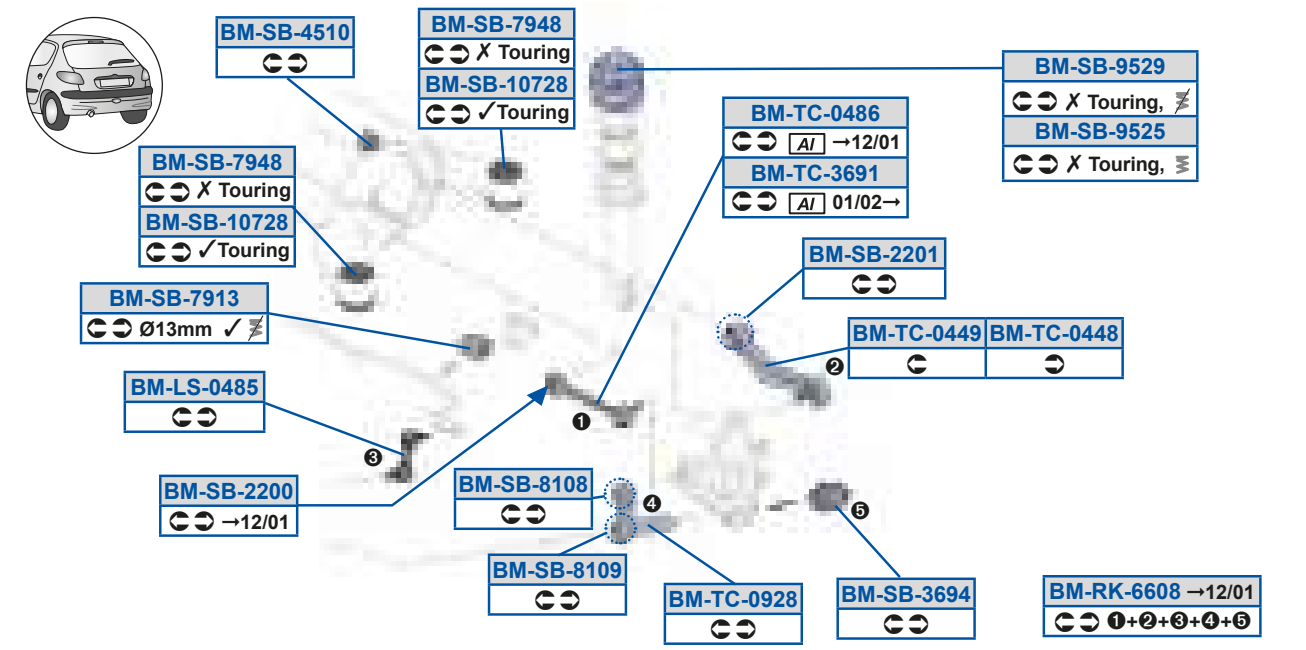
BM-SB-4510
BM-SB-7948
✗ Touring
BM-SB-10728
✓Touring
BM-SB-9529
✗ Touring,
BM-SB-9525
✗ Touring,
BM-TC-0486
AI →12/01
BM-TC-3691
AI 01/02→
BM-SB-7948
✗ Touring
BM-SB-10728
✓Touring
BM-SB-2201
BM-SB-7913
Ø13mm ✓
BM-TC-0449
BM-TC-0448
BM-LS-0485
BM-SB-2200
→12/01
BM-SB-8108
BM-SB-8109
BM-TC-0928
BM-SB-3694
BM-RK-6608 →12/01
❶+❷+❸+❹+❺

P[5Oi 59FBA
A98887GBDEA /40

P[5Rd5BACB
A98887G8EDF3A98887GAEE7

P[5Rd5BACC
A98887G8EDE3A98887GAEDG

P[5Rd5BACF
A8AC87G8FCD3A8AC87GCDD9

P[5Rd5BACG
A8AC87G8FCC3A8AC87GCDD8

P[5Sd5B>E8
A98887G8EDG

P[5Sd5B>EG
A98887G8EE7

P[5Zd58BFC
AACC87G99G93AACC87GCCA9

P[5c Y59C899
A98887GBDEA /40

P[5c Y5DD8E

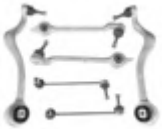

P[5c Y5DD8F

P[5dP598E>F
AAA887GB7AD

P[5dP5>>88
AAA987G7879

P[5dP5>>89
AAA987GB97G

P[5dP5>>9A
A88987G97873A889G7DFECA

P[5dP5ADGB
AAA987G7C7B3AAA987GCDA8

P[5dP5BC98
AA8E87GA77F

P[5dP5DECG
A8AC87GA87F

P[5dP5DED8
A8AC87GB8BC

P[5dP5EG9A
AACC87GADDA

P[5dP5EGBF
AAA887G8B99

P[5dP5F98F
AAA987G8D97 /40

P[5dP5F98G
AAA987G8D97 /40

P[5dP5GC>C
AAC987G89AF3AAC987GB7G8

P[5dP5GC>G
AAC987G8E87

P[5dP5GCE9
A8AA87G8E7G3A8AA87GBD8D

P[5dP5GCEA
A8AA87G8E7F

P[5eQ58BBF
AAA987G7F8D3AAA9DEDEFA9

P[5eQ58BBG
AAA987G7F8C3AAA9DEDEFA8

P[5eQ58BED
A88987G979B3A88988B8E8F

P[5eQ58BEE
A88987G979A3A88988B8E8E

P[5eQ58BFD
AAA987G7EBC3AAA987GE9DB

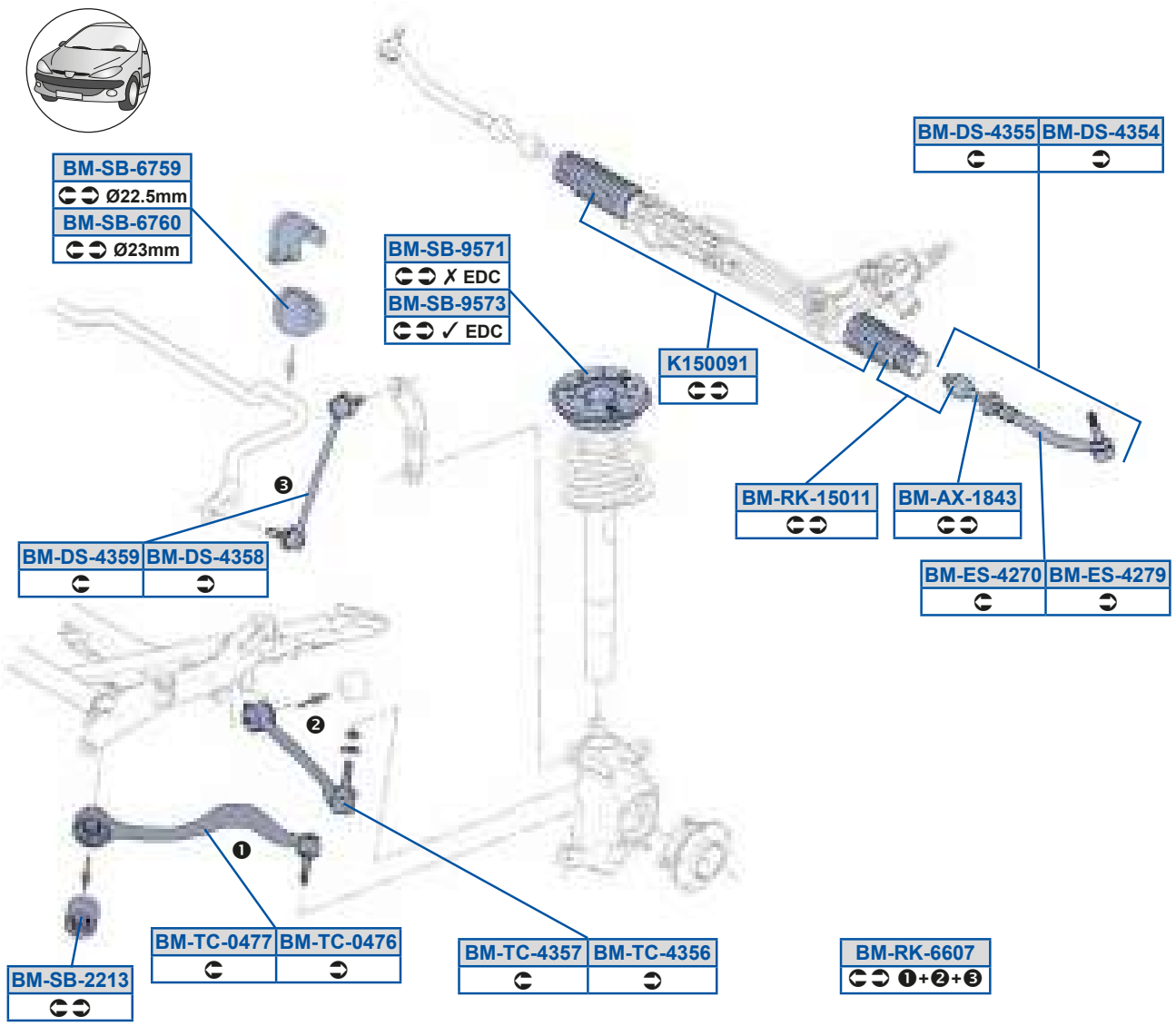
BM-SB-6759
Ø22.5mm
BM-SB-6760
Ø23mm
BM-SB-9571
✗ EDC
BM-SB-9573
✓ EDC
BM-DS-4355
BM-DS-4354
K150091
BM-RK-15011
BM-AX-1843
BM-ES-4270
BM-ES-4279
BM-DS-4359
BM-DS-4358
BM-SB-2213
BM-TC-0477
BM-TC-0476
BM-TC-4357
BM-TC-4356
BM-RK-6607
❶+❷+❸

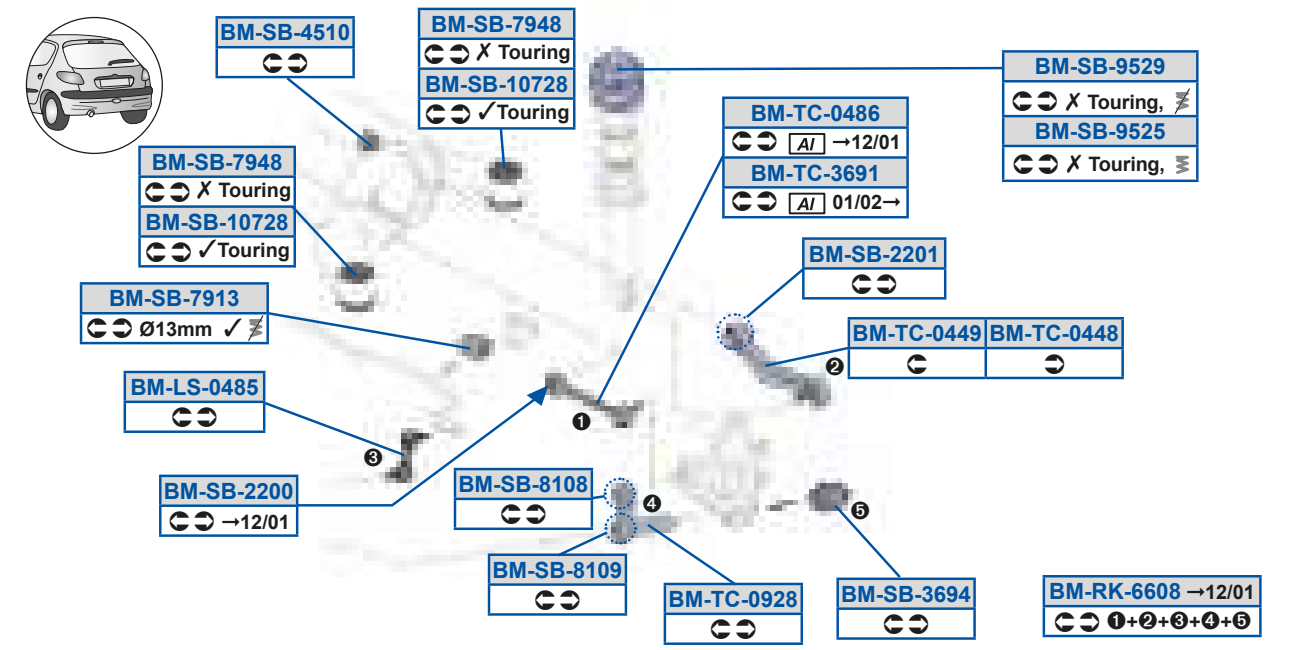
BM-SB-4510
BM-SB-7948
✗ Touring
BM-SB-10728
✓Touring
BM-SB-9529
✗ Touring,
BM-SB-9525
✗ Touring,
BM-TC-0486
AI →12/01
BM-TC-3691
AI 01/02→
BM-SB-7948
✗ Touring
BM-SB-10728
✓Touring
BM-SB-2201
BM-SB-7913
Ø13mm ✓
BM-TC-0449
BM-TC-0448
BM-LS-0485
BM-SB-2200
→12/01
BM-SB-8108
BM-SB-8109
BM-TC-0928
BM-SB-3694
BM-RK-6608 →12/01
❶+❷+❸+❹+❺

P[5eQ58G>F

AAA987G77A73AAA987G8D97

P[5eQ5ADG9

AAA97A77GBD3AAA97AGFAD8

P[5eQ5BACD

A88987GABC73A88987GB9AB

P[5eQ5BACE

A88987GABBG3A88987GB9AA

Y9C88G9

A98A87G9FED

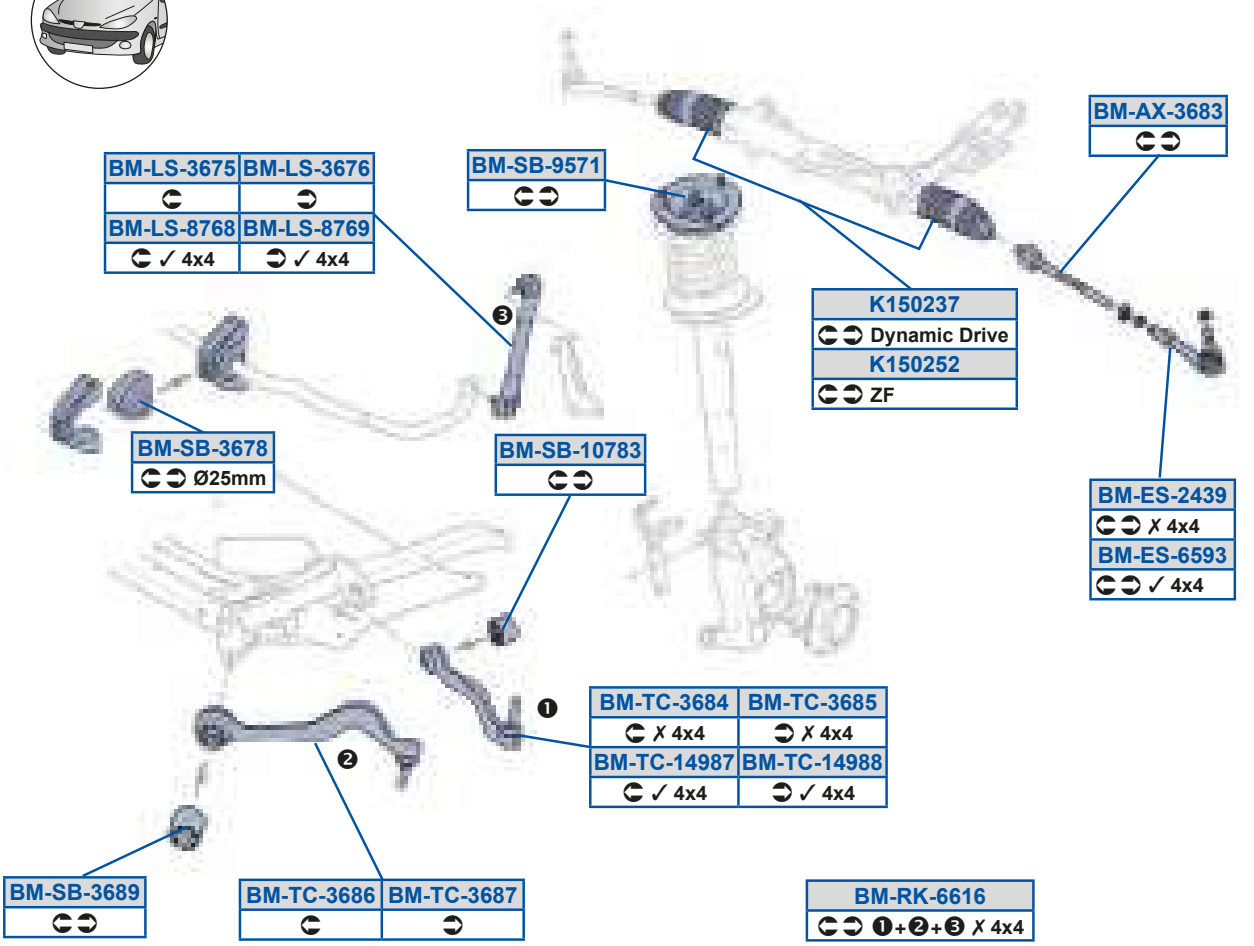
BM-LS-3675 | BM-LS-3676
BM-LS-8768 | BM-LS-8769
✓ 4x4 | ✓ 4x4
BM-SB-9571
BM-AX-3683
K150237
Dynamic Drive
K150252
ZF
BM-SB-3678
Ø25mm
BM-SB-10783
BM-ES-2439
✗ 4x4
BM-ES-6593
✓ 4x4
BM-TC-3684 | BM-TC-3685
✗ 4x4 | ✗ 4x4
BM-TC-14987 | BM-TC-14988
✓ 4x4 | ✓ 4x4
BM-SB-3689
BM-TC-3686 | BM-TC-3687
BM-RK-6616
❶+❷+❸ ✗ 4x4

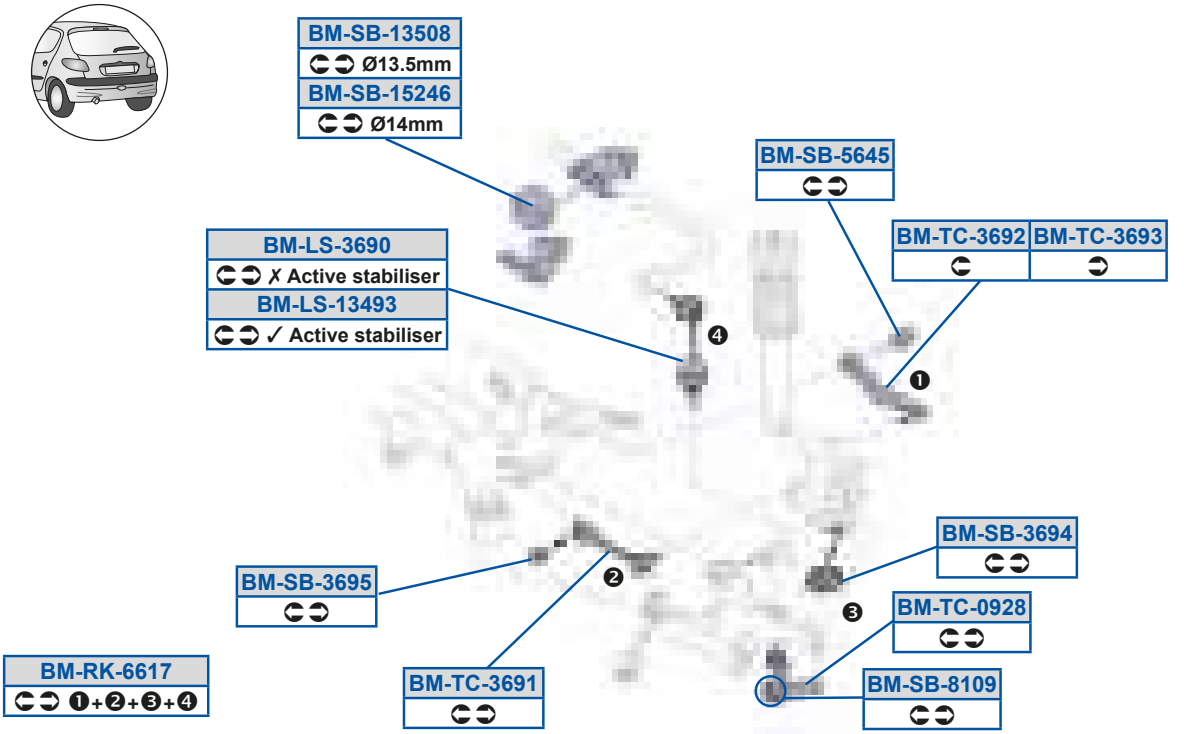
BM-SB-13508
Ø13.5mm
BM-SB-15246
Ø14mm
BM-SB-5645
BM-LS-3690
✗ Active stabiliser
BM-LS-13493
✓ Active stabiliser
BM-TC-3692 | BM-TC-3693
BM-SB-3694
BM-SB-3695
BM-TC-0928
BM-RK-6617
❶+❷+❸+❹
BM-TC-3691
BM-SB-8109

P[5Oi 5ADFA
A987DEEEBEG3A998DED9B7A

P[5Sd5>BAG
A987DEEBAD83A987DEEDGBD

P[5Sd5DCGA
A998DEDEFD7

P[5Zd59ABGA
AAC7DEDFBGA3AAC7DEF8CAE

P[5Zd5ADEC
A8A7DEF8CBE3A8ACB78BCA8

P[5Zd5ADED
A8A7DEF8CBF3A8ACB78BCA9

P[5Zd5ADG8
AAC7DEF8CB73AACCDED8777

P[5Zd5FEDF
A8A7DEF8CC73A8ACDEDF7FB

P[5Zd5FEDG
A8A7DEF8CBG3A8ACDEDF7FA

P[5c Y5DD9D

P[5c Y5DD9E

P[5dP598EFA
A889DEDEDC8

P[5dP59AC8F
AACCDEDDC87

P[5dP59C>BD
AACCDED8CDF

P[5dP5ADEF
A8ACDECAG9F3A8ACDED8CG8

P[5dP5ADFG
A8897A7CD893A889DEDCGG9

P[5dP5ADGB
AAA987G7C7B3AAA987GCDA8

P[5dP5ADGC
AAA987GD /40 3AAA987GE /40

P[5dP5CDBC
AAA9DEDFEFG /40

P[5dP5F98G
AAA987G8D97 /40

P[5dP5GCE9
A8AA87G8E7G3A8AA87GBD8D

P[5eQ58G>F
AAA987G77A73AAA987G8D97

P[5eQ59BGFE
A887DEE7DFG3A8899ABEGF8

P[5eQ59BGFF
9ABEGF93A887DEE7DG7

P[5eQ5ADFB
A8899ABEGDA3A889B79FD7E

P[5eQ5ADFC
A8899ABEGDC3A889B79FD7F

P[5eQ5ADFD
A8879ABF7BE3A887B79DE8G

P[5eQ5ADFE
A8879ABF7BD3A887B79DE97

P[5eQ5ADG9
AAA97A77GBD3AAA97AGFAD8

P[5eQ5ADG>
AAA7DEEAGB83AAA9DEDEECA

P[5eQ5ADGA
AAA7DEEAGB93AAA9DEDEECB

Y9C8>AE
A987DEDCEF9

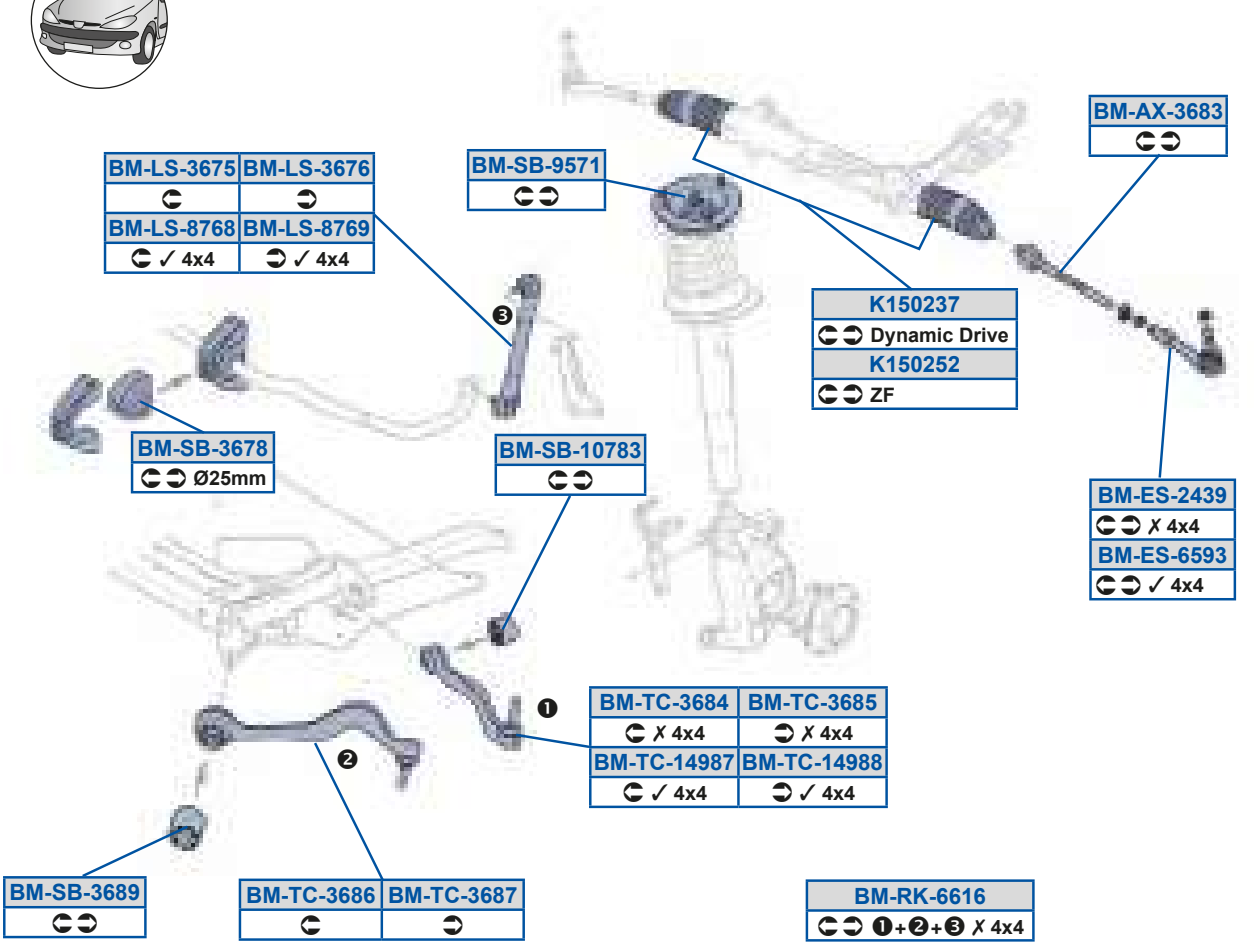
BM-LS-3675 | BM-LS-3676
BM-LS-8768 | BM-LS-8769
✓ 4x4 | ✓ 4x4
BM-SB-9571
BM-AX-3683
K150237
Dynamic Drive
K150252
ZF
BM-SB-3678
Ø25mm
BM-SB-10783
BM-ES-2439
✗ 4x4
BM-ES-6593
✓ 4x4
BM-TC-3684 | BM-TC-3685
✗ 4x4 | ✗ 4x4
BM-TC-14987 | BM-TC-14988
✓ 4x4 | ✓ 4x4
BM-SB-3689
BM-TC-3686 | BM-TC-3687
BM-RK-6616
❶+❷+❸ ✗ 4x4

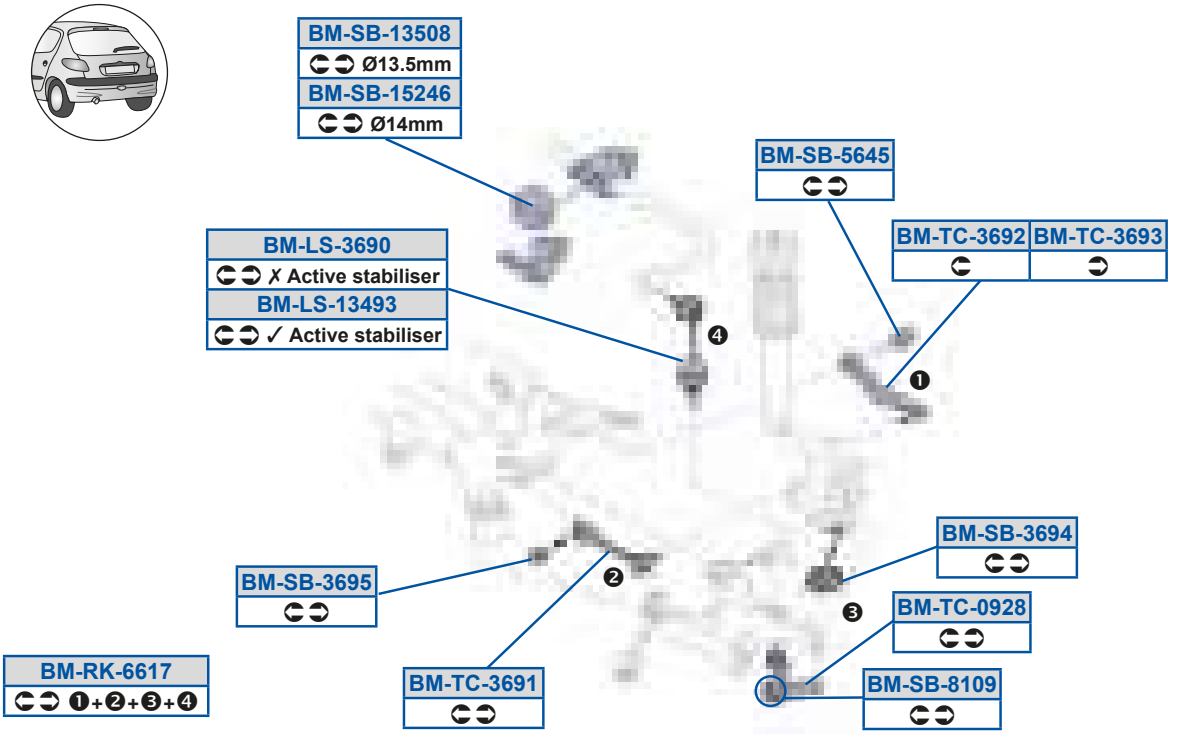
BM-SB-13508
Ø13.5mm
BM-SB-15246
Ø14mm
BM-SB-5645
BM-LS-3690
✗ Active stabiliser
BM-LS-13493
✓ Active stabiliser
BM-TC-3692 | BM-TC-3693
BM-SB-3694
BM-SB-3695
BM-TC-0928
BM-RK-6617
❶+❷+❸+❹
BM-TC-3691
BM-SB-8109

MOOG

Y9C8>C>

A98A7AGDB7C3A98ADEC879D

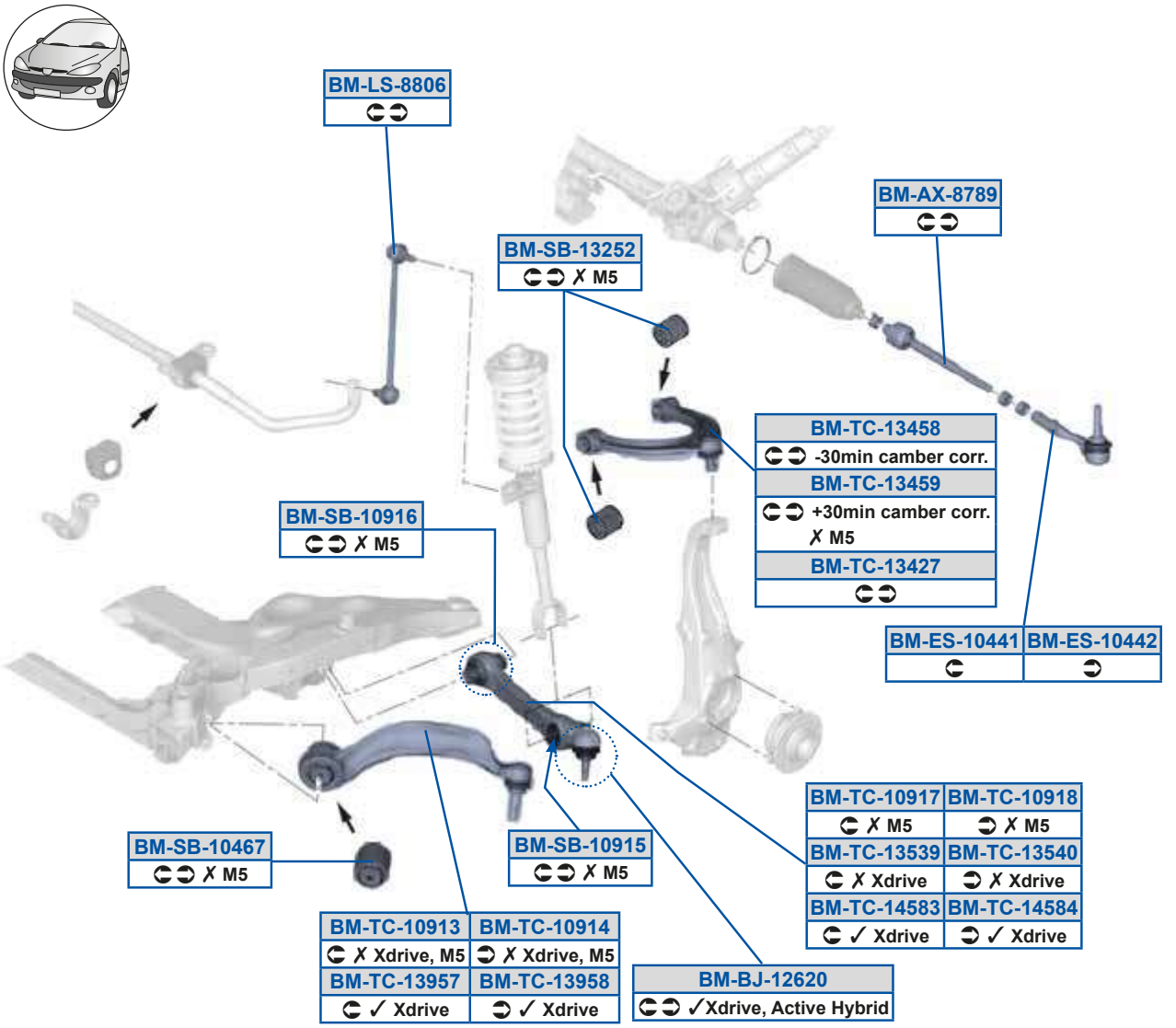
BM-LS-8806
BM-SB-13252
✗ M5
BM-AX-8789
BM-TC-13458
-30min camber corr.
BM-TC-13459
+30min camber corr.
✗ M5
BM-TC-13427
BM-SB-10916
✗ M5
BM-ES-10441
BM-ES-10442
BM-TC-10917
BM-TC-10918
✗ M5
✗ M5
BM-TC-13539
BM-TC-13540
✗ Xdrive
✗ Xdrive
BM-TC-14583
BM-TC-14584
✓ Xdrive
✓ Xdrive
BM-SB-10467
✗ M5
BM-SB-10915
✗ M5
BM-TC-10913
BM-TC-10914
✗ Xdrive, M5
✗ Xdrive, M5
BM-TC-13957
BM-TC-13958
✓ Xdrive
✓ Xdrive
BM-BJ-12620
✓Xdrive, Active Hybrid

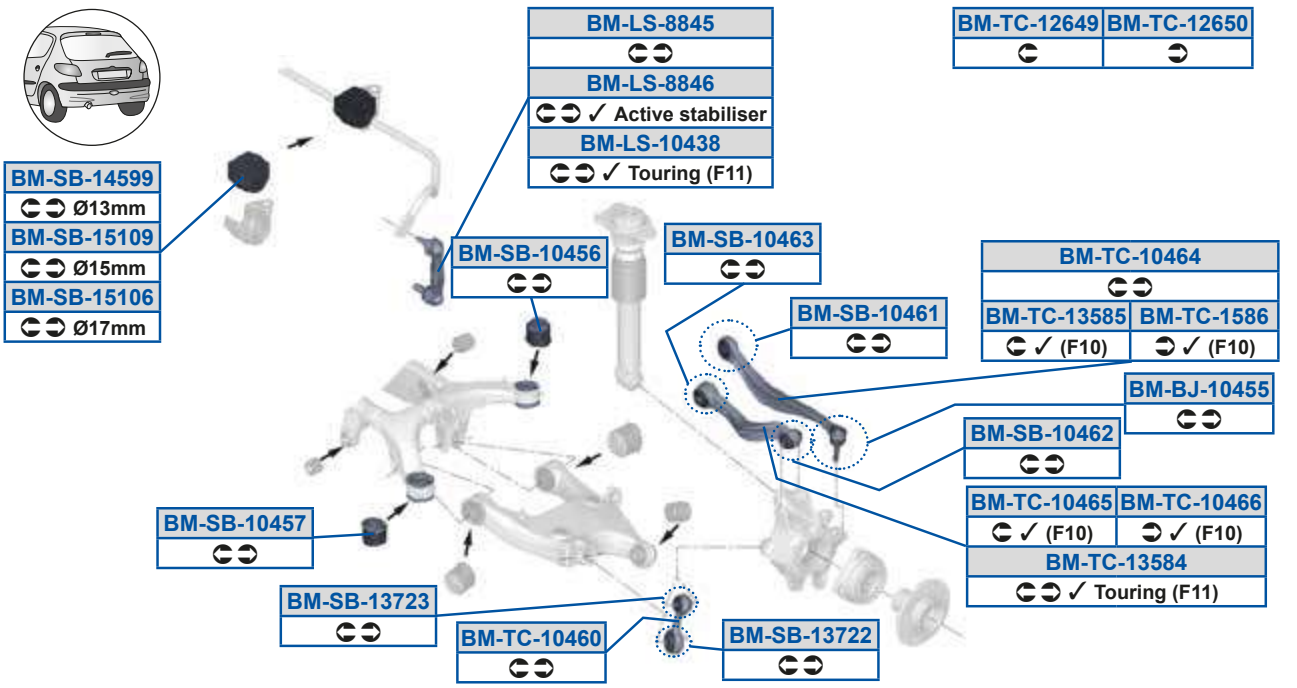
BM-LS-8845
BM-LS-8846
✓ Active stabiliser
BM-LS-10438
✓ Touring (F11)
BM-TC-12649
BM-TC-12650
BM-SB-14599
Ø13mm
BM-SB-15109
Ø15mm
BM-SB-15106
Ø17mm
BM-SB-10456
BM-SB-10463
BM-TC-10464
BM-SB-10461
BM-TC-13585
BM-TC-1586
✓ (F10)
✓ (F10)
BM-BJ-10455
BM-SB-10462
BM-TC-10465
BM-TC-10466
✓ (F10)
✓ (F10)
BM-TC-13584
✓ Touring (F11)
BM-SB-10457
BM-SB-13723
BM-TC-10460
BM-SB-13722

MOOG

P[5Oi 5FEFG
A987DEFBE8D3A987DEFBE8G

P[5Zd5FFBD
AE87DEEC8FG

P[5dP598G9D
A889DEG8BCC

P[5eQ598BDB
AAA9DEECG79

P[5PX598BCC
AAA9DEF7BAF

P[5dP598BCD
AAA8DEECEG93AAA8DEGAFDB

P[5dP59A>C>
A889DEECGDE /40

P[5eQ598BDC
AAA9B7DG9FA3AAA9DEF98AC

P[5PX59>D>8
A889DEEEECA

P[5dP598BCE
AAA8DEECEF73AAA8DEG7CEA

P[5dP59AE>>
AAA9DEECDFA /40

P[5eQ598BDD
AAA9B7DG9FB3AAA9DEF98AD

P[5Sd598BB9
A987DEFBEG7

P[5dP598BD9
AAA9DEECG79 /40

P[5dP59AE>A
AAA9DEECDFA /40

P[5eQ598G9A
A889DEECGE8

P[5Sd598BB>
A987DEFBEGD

P[5dP598BD>
AAA9B7DG9FA /40

P[5dP59BCGG
AACCDEFFFD8

P[5eQ598G9B
A889DEECGE9

P[5Zd598BAF
AACCDEFDB9G

P[5dP598BDA
AAA9B7DG9FA /40

P[5dP59C98D
AACCDEGEFFF

P[5eQ598G9E
A889DEGB97A

P[5Zd5FF8D
A8ACDEEEA8G

P[5dP598BDE
A889DEECGE8 /40

P[5dP59C98G
AACCDEFFDA7

P[5eQ598G9F
A889DEGB97B

P[5Zd5FFBC
AACCDEEEDAC

P[5dP598G9C
A889DEGB97A /40

P[5eQ598BD8
AAA9DEECDFA

P[5eQ59>DBG
A889B7FAA883A889DEECGCG

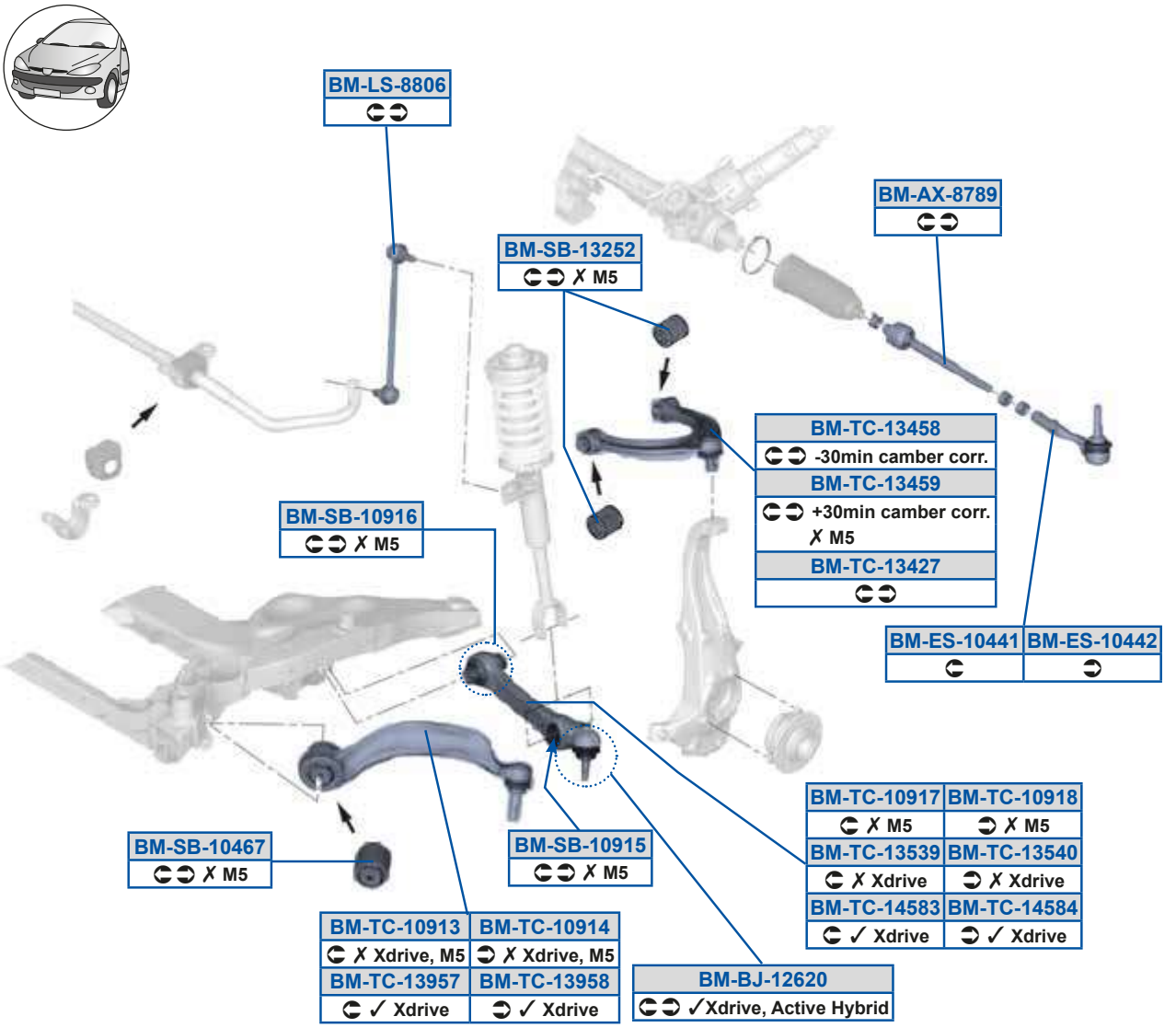
BM-LS-8806
BM-SB-13252
✗ M5
BM-AX-8789
BM-TC-13458
-30min camber corr.
BM-TC-13459
+30min camber corr.
✗ M5
BM-TC-13427
BM-SB-10916
✗ M5
BM-ES-10441
BM-ES-10442
BM-TC-10917
✗ M5
BM-TC-10918
✗ M5
BM-TC-13539
✗ Xdrive
BM-TC-13540
✗ Xdrive
BM-TC-14583
✓ Xdrive
BM-TC-14584
✓ Xdrive
BM-SB-10467
✗ M5
BM-SB-10915
✗ M5
BM-TC-10913
✗ Xdrive, M5
BM-TC-10914
✗ Xdrive, M5
BM-TC-13957
✓ Xdrive
BM-TC-13958
✓ Xdrive
BM-BJ-12620
✓Xdrive, Active Hybrid

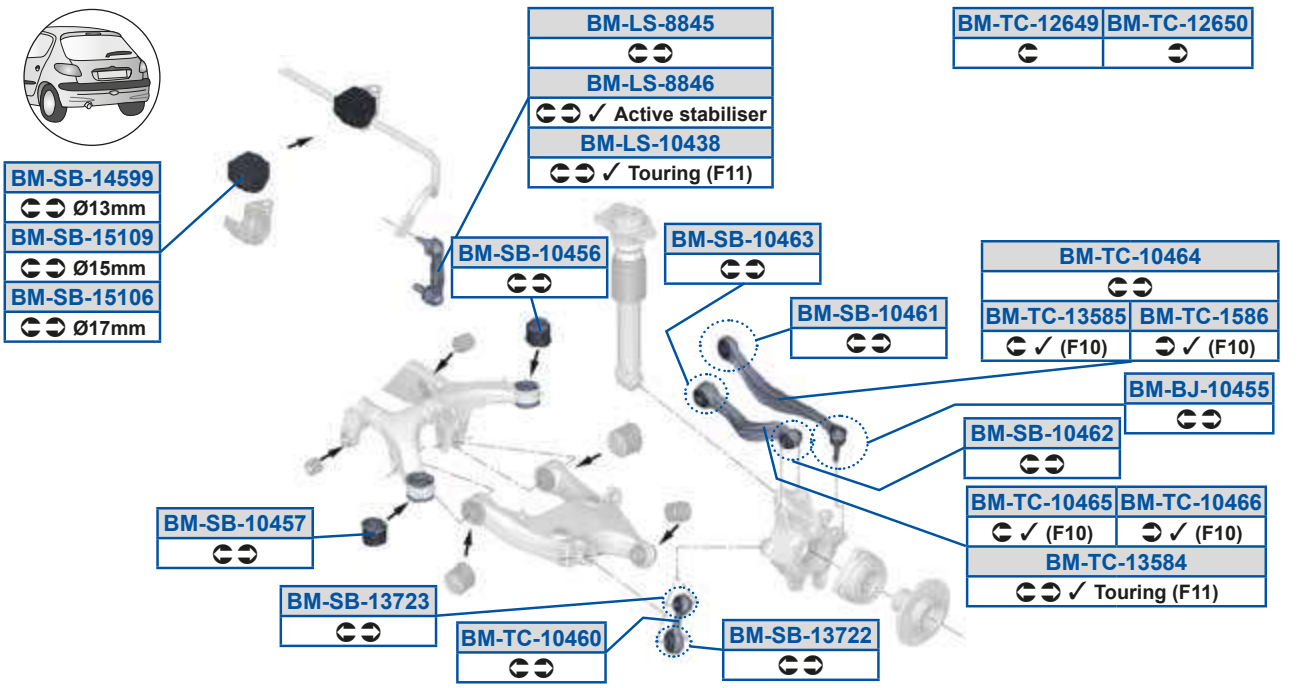
BM-LS-8845
BM-LS-8846
✓ Active stabiliser
BM-LS-10438
✓ Touring (F11)
BM-TC-12649
BM-TC-12650
BM-SB-14599
Ø13mm
BM-SB-15109
Ø15mm
BM-SB-15106
Ø17mm
BM-SB-10456
BM-SB-10463
BM-TC-10464
BM-SB-10461
BM-TC-13585
✓ (F10)
BM-TC-1586
✓ (F10)
BM-BJ-10455
BM-SB-10462
BM-TC-10465
✓ (F10)
BM-TC-10466
✓ (F10)
BM-TC-13584
✓ Touring (F11)
BM-SB-10457
BM-SB-13723
BM-TC-10460
BM-SB-13722

P[5eQ59>DC8
A889B7FAA893A889DEECGD7

P[5eQ59AB>E
A889DEECGDE

P[5eQ59ABCF
A889DEEGG7F

P[5eQ59ABCG
A889DEEGFE8

P[5eQ59ACAG
A889DEECGDA3A889DEGF87E

P[5eQ59ACB8
A889DEECGDB3A889DEGF87F

P[5eQ59ACFB
AAA9B7DGBDG3AAA9DEEGFC8

P[5eQ59ACFC
AAA9DEEGFBE

P[5eQ59ACFD
AAA9DEEGFBF

P[5eQ59AGCE
A889B7FAA7G3A889DEEEEAA

P[5eQ59AGCF
A889B7FAA873A889DEEEEAB

P[5eQ59BCFA
A889DEEEEBA3A889DFC7D7C

P[5eQ59BCFB
A889DEEEEBB3A889DFC7D7D

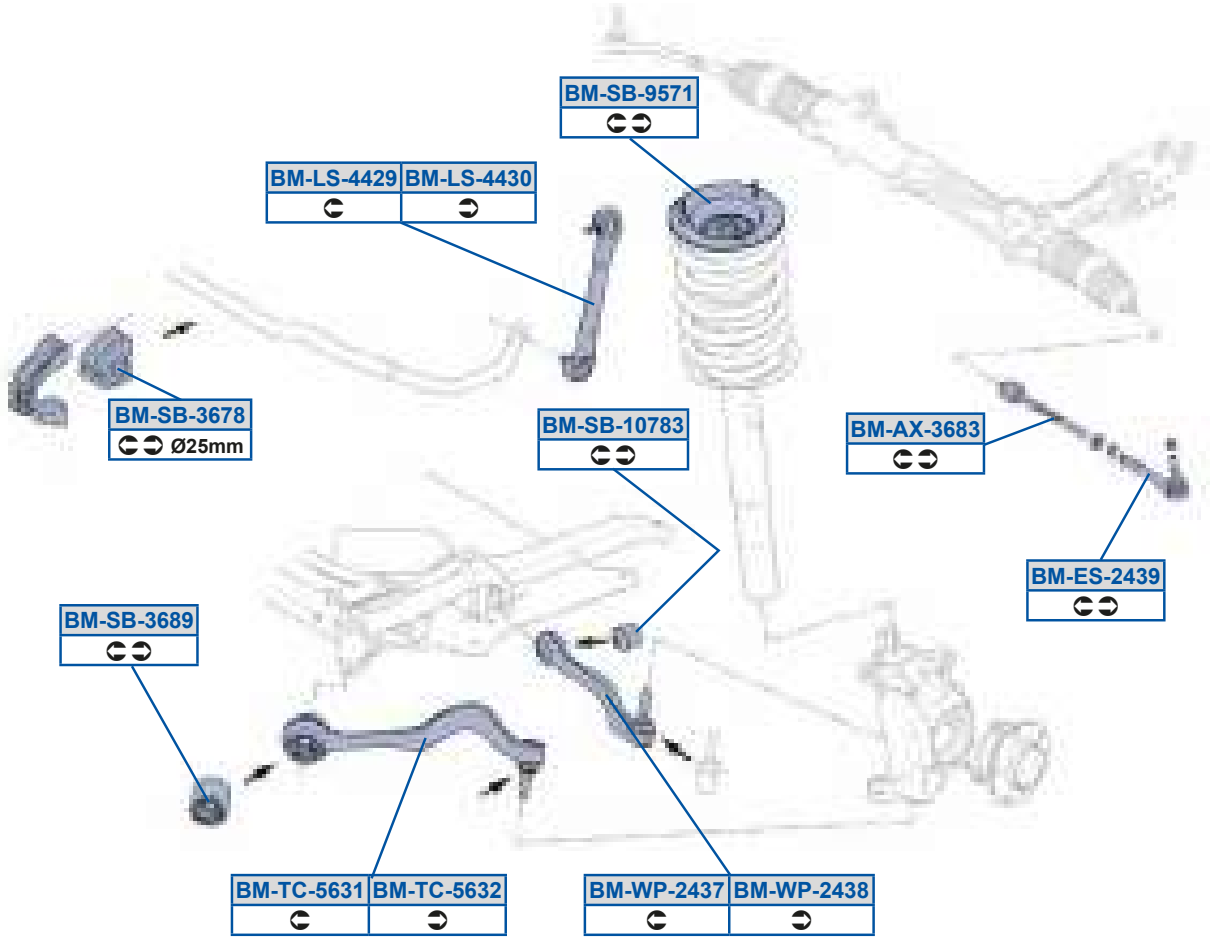
BM-SB-9571
BM-LS-4429
BM-LS-4430
BM-SB-3678
Ø25mm
BM-SB-10783
BM-AX-3683
BM-ES-2439
BM-SB-3689
BM-TC-5631
BM-TC-5632
BM-WP-2437
BM-WP-2438

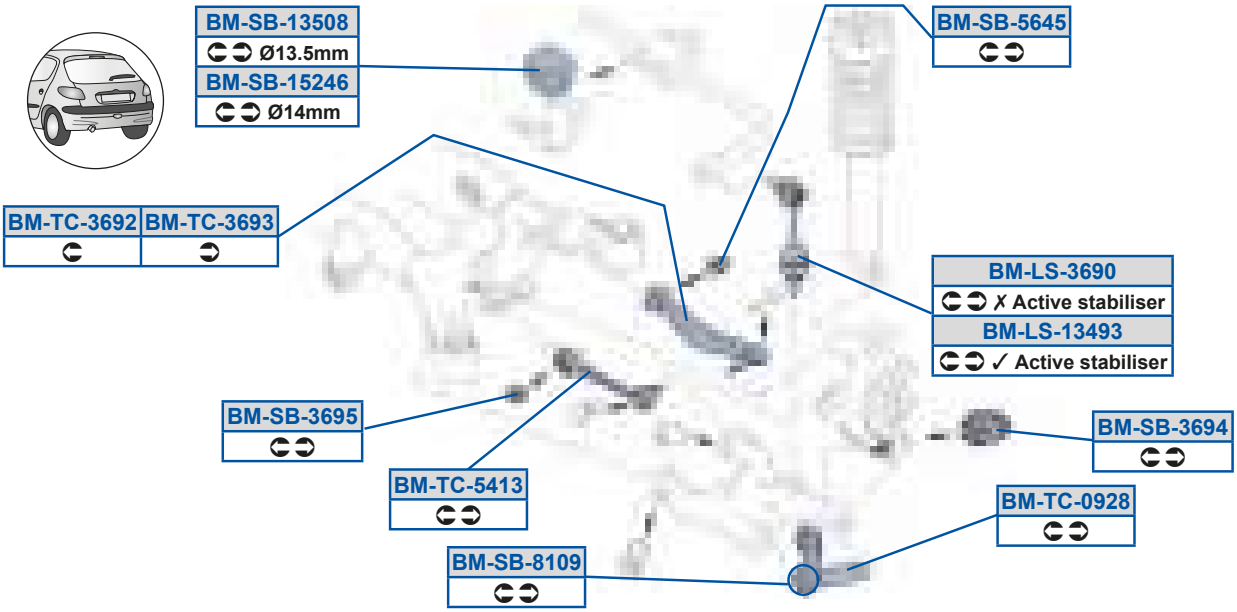
BM-SB-13508
Ø13.5mm
BM-SB-15246
Ø14mm
BM-SB-5645
BM-TC-3692
BM-TC-3693
BM-LS-3690
✗ Active stabiliser
BM-LS-13493
✓ Active stabiliser
BM-SB-3695
BM-SB-3694
BM-TC-5413
BM-TC-0928
BM-SB-8109

P[5Oi 5ADFA
A987DEEEBEG3A998DED9B7A

P[5dP59C>BD
AACCDED8CDF

P[5eQ58G>F
AAA987G77A73AAA987G8D97

P[5Sd5>BAG
A987DEEBAD83A987DEEDGBD

P[5dP5ADEF
A8ACDECAG9F3A8ACDED8CG8

P[5eQ5ADG>
AAA7DEEAGB83AAA9DEDEECA

P[5Zd59ABGA
AAC7DEDFBGA3AAC7DEF8CAE

P[5dP5ADFG
A8897A7CD893A889DEDCGG9

P[5eQ5ADGA
AAA7DEEAGB93AAA9DEDEECB

P[5Zd5ADG8
AAC7DEF8CB73AACCDED8777

P[5dP5ADGB
AAA987G7C7B3AAA987GCDA8

P[5eQ5CDA9
A889B7BDBAG3A889DEDCGGE

P[5Zd5BB>G
A8A7DEF8CB83A8ACB78BCEC

P[5dP5ADGC
AAA987GD /40BAAA987GE /40

P[5eQ5CDA>
A889B7BDBB73A889DEDCGGF

P[5Zd5BBA8
A8A7DEF8CB93A8ACB78BCED

P[5dP5CDBC
AAA9DEDFEFG /40

P[5h a5>BAE
A889DECCFAC3A889DEE7898

P[5dP598EFA
A889DEDEDC8

P[5dP5F98G
AAA987G8D97 /40

P[5h a5>BAF
A889DECCFAD3A889DEE7899

P[5dP59AC8F
AACCDEDDC87

P[5dP5GCE9
A8AA87G8E7G3A8AA87GBD8D

D Q x éı x 0T9; 1	8G799	D Q x 0T9A1	99798

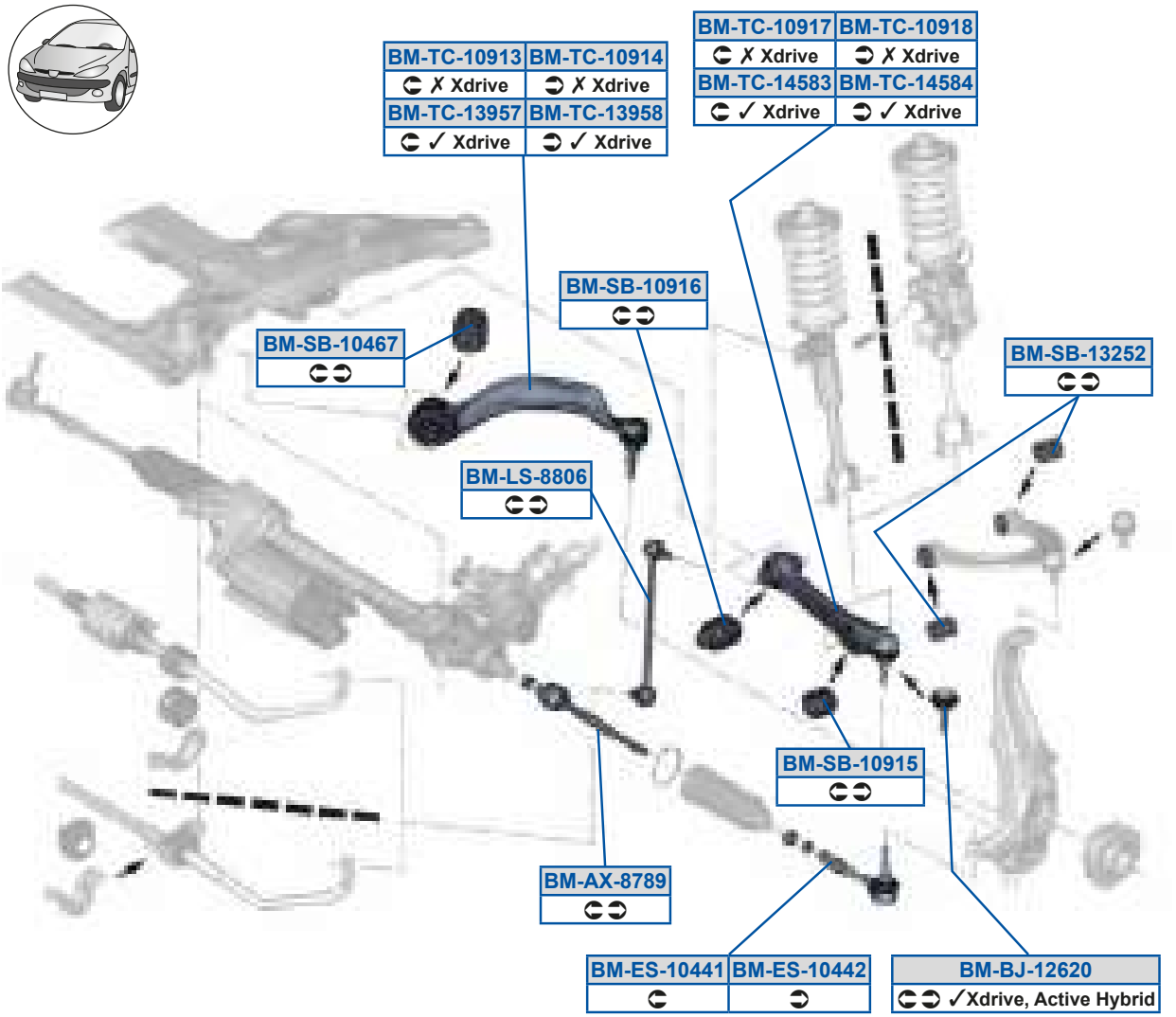

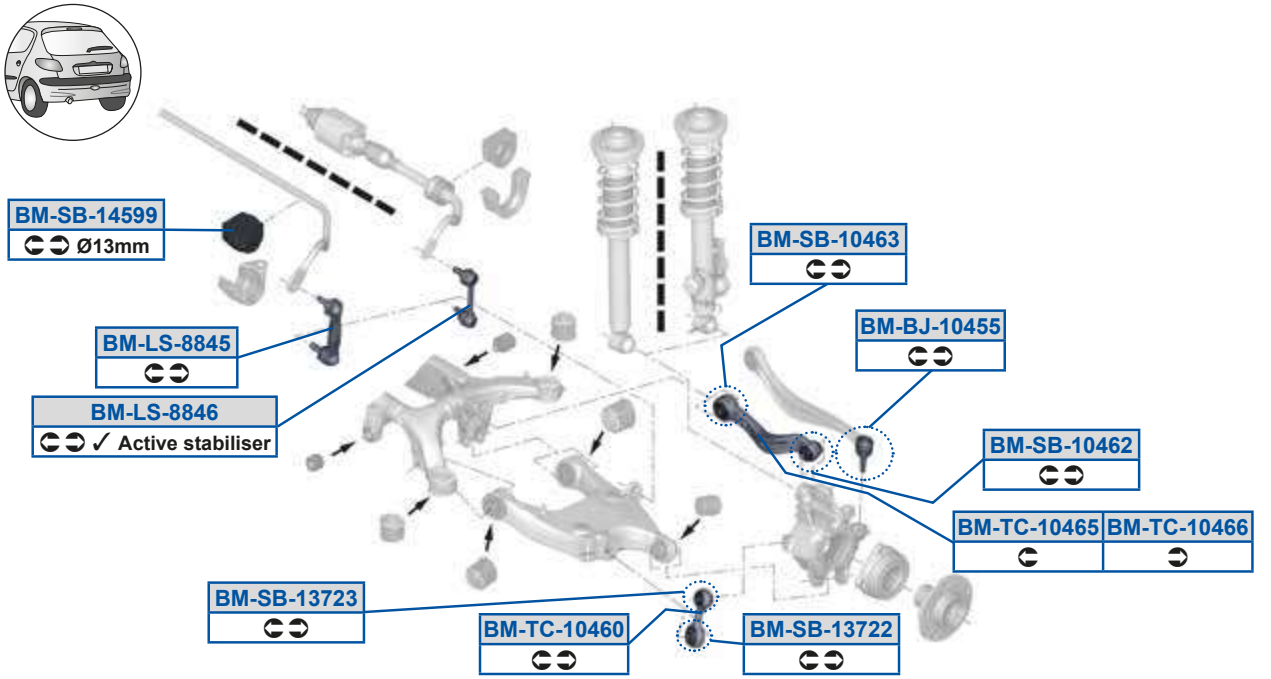

P[5Oi 5FEFG
A987DEFBE8D3A987DEFBE8G

P[5dP598BD>
AAA9B7DG9FA /40

P[5dP59BCGG
AACCDEFFFD8

P[5eQ59AGCE
A889B7FAA7G3A889DEEEEAA

P[5PX598BCC
AAA9DEF7BAF

P[5dP598BDA
AAA9B7DG9FA /40

P[5eQ598BD8
AAA9DEECDFA

P[5eQ59AGCF
A889B7FAA873A889DEEEEAB

P[5PX59>D>8
A889DEEEECA

P[5dP598BDE
A889DEECGE8 /40

P[5eQ598BDC
AAA9B7DG9FA3AAA9DEF98AC

P[5eQ59BCFA
A889DEEEEBA3A889DFC7D7C

P[5Sd598BB9
A987DEFBEG7

P[5dP598G9C
A889DEGB97A /40

P[5eQ598BDD
AAA9B7DG9FB3AAA9DEF98AD

P[5eQ59BCFB
A889DEEEEBB3A889DFC7D7D

P[5Sd598BB>
A987DEFBEGD

P[5dP598G9D
A889DEG8BCC

P[5eQ598G9A
A889DEECGE8

P[5Zd5FF8D
A8ACDEEEA8G

P[5dP59A>C>
A889DEECGDE /40

P[5eQ598G9B
A889DEECGE9

P[5Zd5FFBC
AACCDEEEDAC

P[5dP59AE>>
AAA9DEECDFA /40

P[5eQ598G9E
A889DEGB97A

P[5Zd5FFBD
AE87DEEC8FG

P[5dP59AE>A
AAA9DEECDFA /40

P[5eQ598G9F
A889DEGB97B

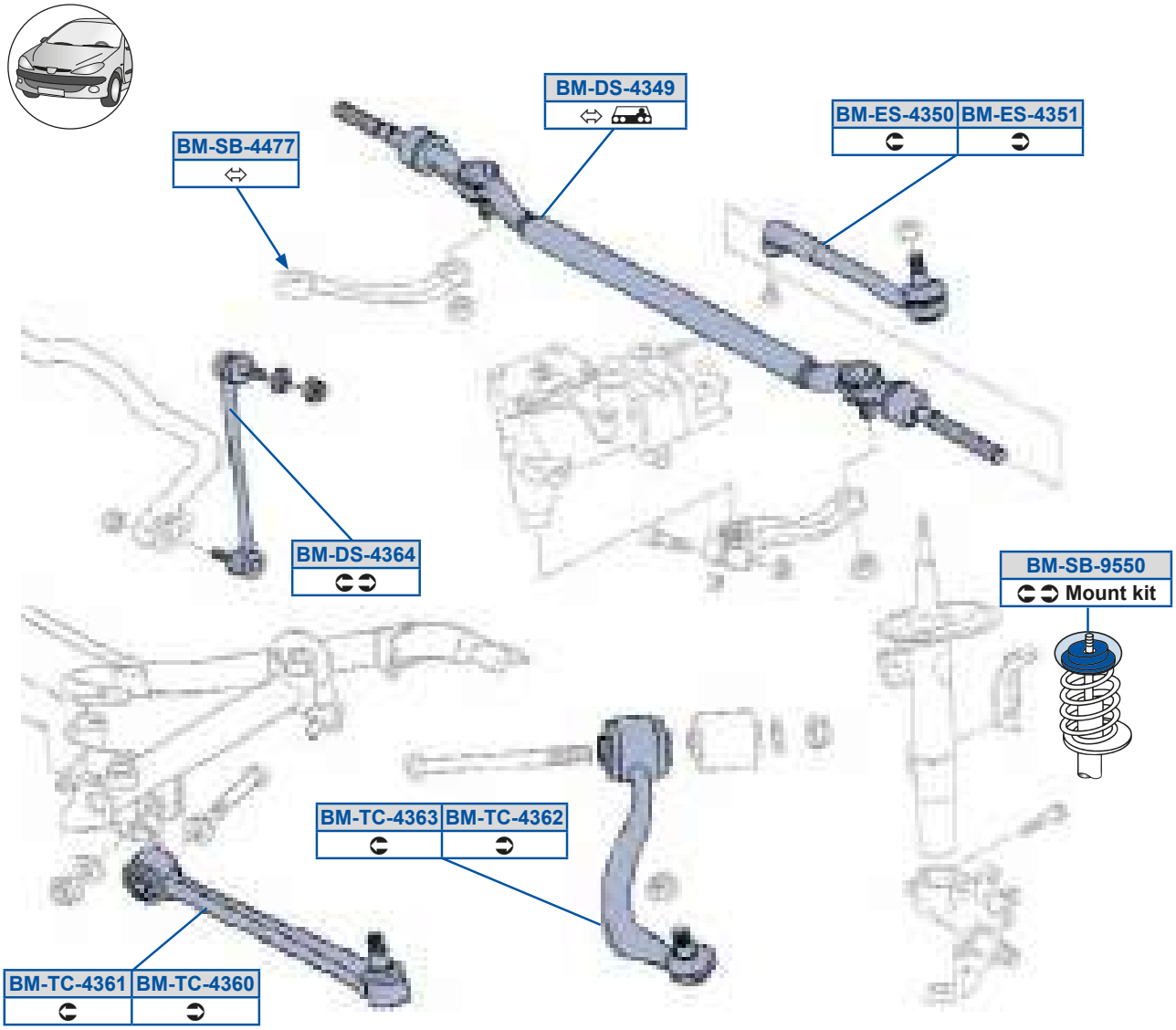
BM-DS-4349
BM-ES-4350
BM-ES-4351
BM-SB-4477
BM-DS-4364
BM-SB-9550
Mount kit
BM-TC-4363
BM-TC-4362
BM-TC-4361
BM-TC-4360

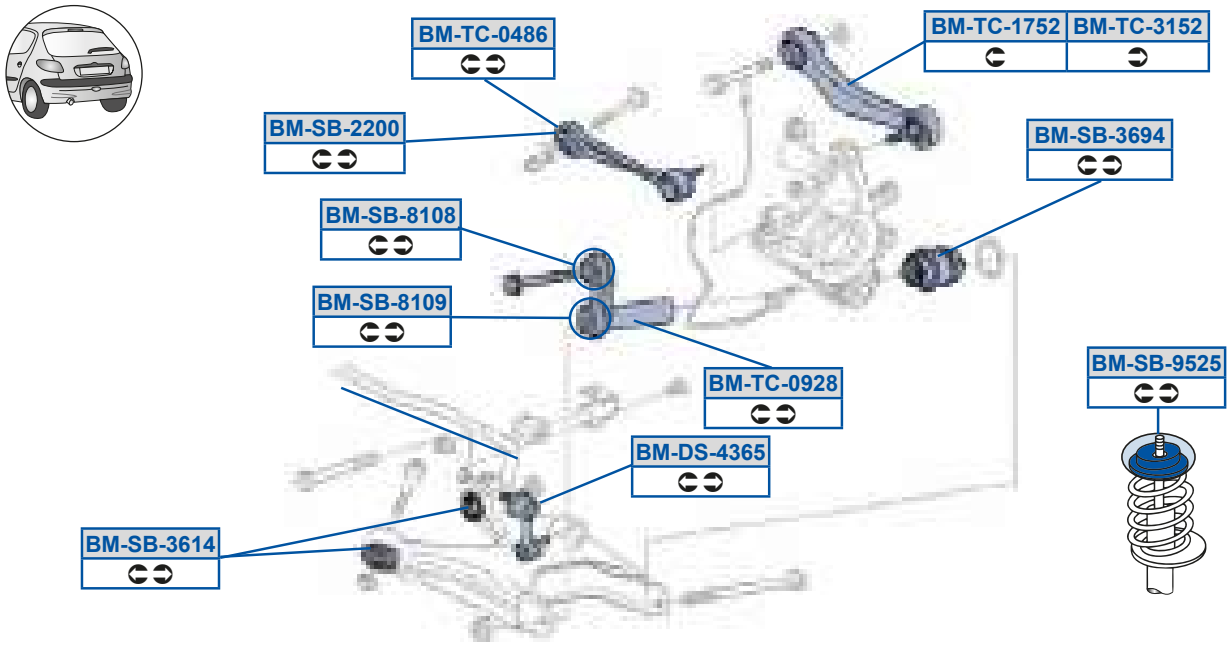
BM-TC-0486
BM-TC-1752
BM-TC-3152
BM-SB-2200
BM-SB-3694
BM-SB-8108
BM-SB-8109
BM-TC-0928
BM-SB-9525
BM-DS-4365
BM-SB-3614

P[5Rd5BABG
A99887G8G8A3A99887G8G8E

P[5dP5BBEE
A998889GF7E3A99888AADGF

P[5eQ5A9C>
AAA987G7G7D3AAA9DEE77D7

P[5Rd5BADB
A8AC87G8BGD3A8AC87GCDGC

P[5dP5F98F
AAA987G8D97 /40

P[5eQ5BAD8
A88988B97FF

P[5Rd5BADC
AACC87G8BGE3AACC87GCDGD

P[5dP5F98G
AAA987G8D97 /40

P[5eQ5BAD9
A88988B97FE

P[5Sd5BAC8
A99888B8ABC

P[5dP5GC>C
AAC987G89AF3AAC987GB7G8

P[5eQ5BAD>
A88988B8E983A88988B8E99

P[5Sd5BAC9
A99888B8ABD

P[5dP5GCC8
A8AA87G7D883A8AA87G7D89

P[5eQ5BADA
A88988B8E983A88988B8E99

P[5dP5>>88
AAA987G7879

P[5eQ58BFD
AAA987G7EBC3AAA987GE9DB

P[5dP5AD9B
AAA887G7GCD

P[5eQ58G>F
AAA987G77A73AAA987G8D97

P[5dP5ADGB
AAA987G7C7B3AAA987GCDA8

P[5eQ59EC>
AAA987G7G7C3AAA9DEE77CG

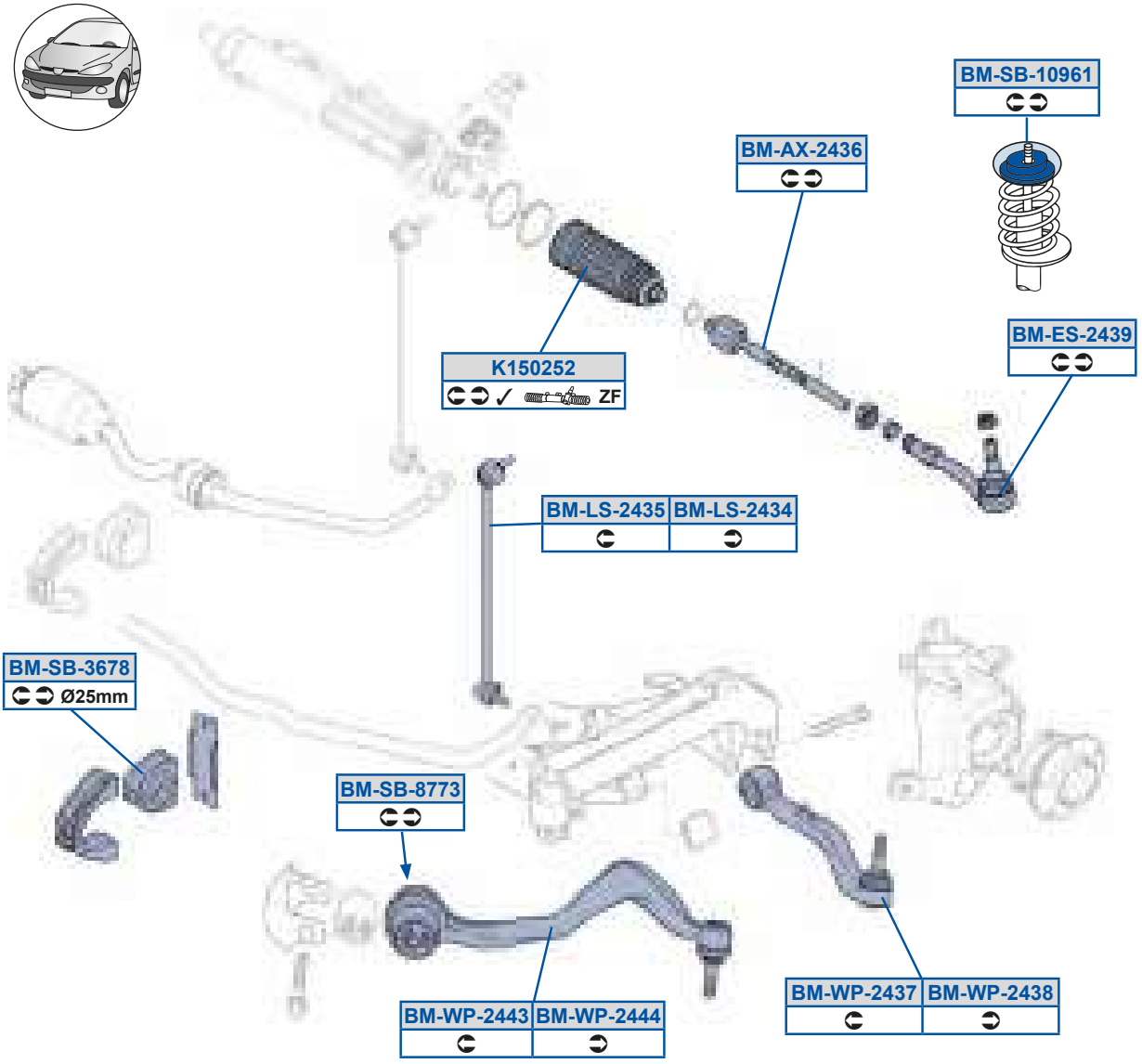
BM-SB-10961
BM-AX-2436
BM-ES-2439
K150252
✓ ZF
BM-LS-2435
BM-LS-2434
BM-SB-3678
Ø25mm
BM-SB-8773
BM-WP-2443
BM-WP-2444
BM-WP-2437
BM-WP-2438

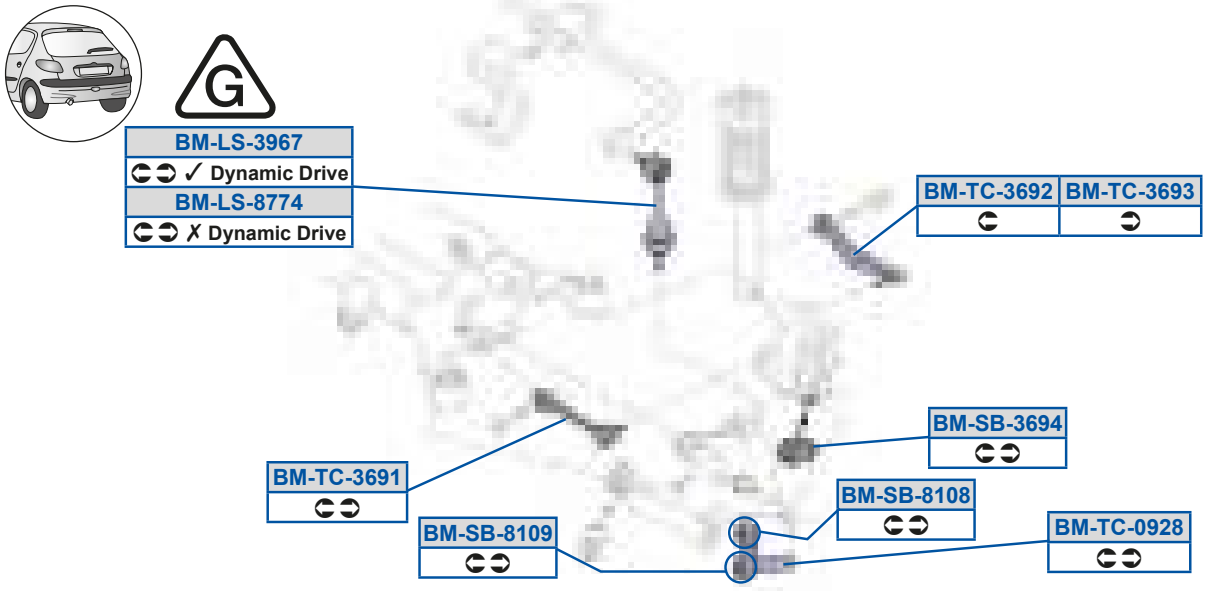
G
BM-LS-3967
✓ Dynamic Drive
BM-LS-8774
✗ Dynamic Drive
BM-TC-3692
BM-TC-3693
BM-SB-3694
BM-TC-3691
BM-SB-8108
BM-SB-8109
BM-TC-0928

P[5Oi 5>BAD
A987DEEE9DF

P[5dP5ADGB
AAA987G7C7B3AAA987GCDA8

P[5h a5>BAE
A889DECCFAC3A889DEE7898

P[5Sd5>BAG
A987DEEBAD83A987DEEDGBD

P[5dP5F98F
AAA987G8D97 /40

P[5h a5>BAF
A889DECCFAD3A889DEE7899

P[5Zd5>BAB
A8A7DEF8CBD3A8ACDECAEDF

P[5dP5F98G
AAA987G8D97 /40

P[5h a5>BBA
A889B79DBCA3A889B7BDBB8

P[5Zd5>BAC
A8A7DEF8CBC3A8ACDECAEDE

P[5dP5FEEA
A8897A79ECB3A8897A7BA7F

P[5h a5>BBB
A889B79DBCB3A889B7BDBB8

P[5Zd5AGDE
AAC7DEF8CAG3AACCDECAEE7

P[5eQ58G>F
AAA987G77A73AAA987G8D97

Y9C8>C>
A98A7AGDB7C3A98ADEC879D

P[5Zd5FEEB
AAC7DEF8CAF3AACCDECEBD7

P[5eQ5ADG9
AAA97A77GBD3AAA97AGFAD8

P[5dP598GD9
A8AADEEGD89

P[5eQ5ADG>
AAA7DEEAGB83AAA9DEDEECA

P[5dP5ADEF
A8ACDECAG9F3A8ACDED8CG8

P[5eQ5ADGA
AAA7DEEAGB93AAA9DEDEECB

BM-ES-3728	BM-ES-3729
✗ Xi, Xdrive, Xd	✗ Xi, Xdrive, Xd
BM-ES-8883	BM-ES-8884
✓ Xi, Xdrive, Xd	✓ Xi, Xdrive, Xd

BM-LS-3725	BM-LS-3727
✗ Xdrive	✗ Xdrive
BM-LS-14585	BM-LS-14586
✓ Xdrive	✓ Xdrive

BM-AX-3731
✓ ZF
BM-AX-3730
✓ TRW
BM-AX-8885
✓ Xdrive

BM-TC-3738	BM-TC-3739
✗ Xdrive	✗ Xdrive
BM-TC-14531	BM-TC-14532
✓ Xdrive	✓ Xdrive

BM-SB-3737
✗ Xdrive
BM-SB-13688
✓ Xdrive

BM-SB-3734
✗ Xdrive
BM-SB-13492
✓ Xdrive

BM-TC-3732	BM-TC-3733
✗ Xdrive	✗ Xdrive
BM-TC-13687	
✓ Xdrive	

BM-RK-8974
❶+❷+❸+❹

BM-SB-14582
Ø14mm

BM-LS-3743

BM-RK-8951
❶+❷+❸+❹+❺

BM-SB-8753

BM-TC-13747

BM-TC-3741

BM-SB-13489

BM-SB-5625

BM-LS-10919	BM-LS-10920

BM-SB-7445

BM-SB-7885

BM-SB-8752

BM-TC-3742

BM-TC-3740

P[5Oi 5AEA8
A998DED99BA

P[5Zd598G>8
AAC7DEFCD7F

P[5dP59ABFG
AA8EDED79FF3AA8EDEE7FDD

P[5dP5EFFC
AAA9DEDCCAB

P[5Oi 5AEA9
A987DEDC9AC3A987DEDC9AD

P[5Zd59BCFC
A8ACDEDFEE8

P[5dP59ABG>
A8897B87EG83A889DEDFF8F

P[5dP5FEC>
AAA9DEDCCAC

P[5Oi 5FFFC
A987DEGAD98 /40

P[5Zd59BCFD
A8ACDEDFEE9

P[5dP59ADFF
A889DEDFGFG /40

P[5dP5FECA
AAA9DEDA7GA3AAA9DEE7F9G

P[5Sd5AE>F
A987DEDC7FG3A987DEDEEF8

P[5Zd5AE>C
A8ACDEDCGAA

P[5dP59BCF>
AACCDED8AD7

P[5eQ59ADFE
A889DEDFGFG

P[5Sd5AE>G
A987DEDC7G73A987DEDEEF9

P[5Zd5AE>E
A8ACDEDCGAB

P[5dP5AEAB
A8897AGACB73A8897AGFAC7

P[5eQ59AEBE
AAA9DEF98DF

P[5Sd5FFFA
A987DEDG7EA3A987DEGAD9A

P[5Zd5AEBA
AACCDEDBB9F

P[5dP5AEAE
A889DEDADGG /40

P[5eQ59BCA9
A889DEDFGFA

P[5Sd5FFFB
A987DEDG7EB3A987DEGAD9B

P[5cY5FGC9

P[5dP5CD>C
AAA9DECD9BG3AAA9DEECCC9

P[5eQ59BCA>
A889DEDFGFB

P[5Zd598G9G
AAC7DEFCD7E

P[5cY5FGEB
AAA9DEDCB9Co8

P[5dP5EBBC
AAA9DEDA7G9

P[5eQ5AEA>
A889B7AD9DG3A889DEDAE7A

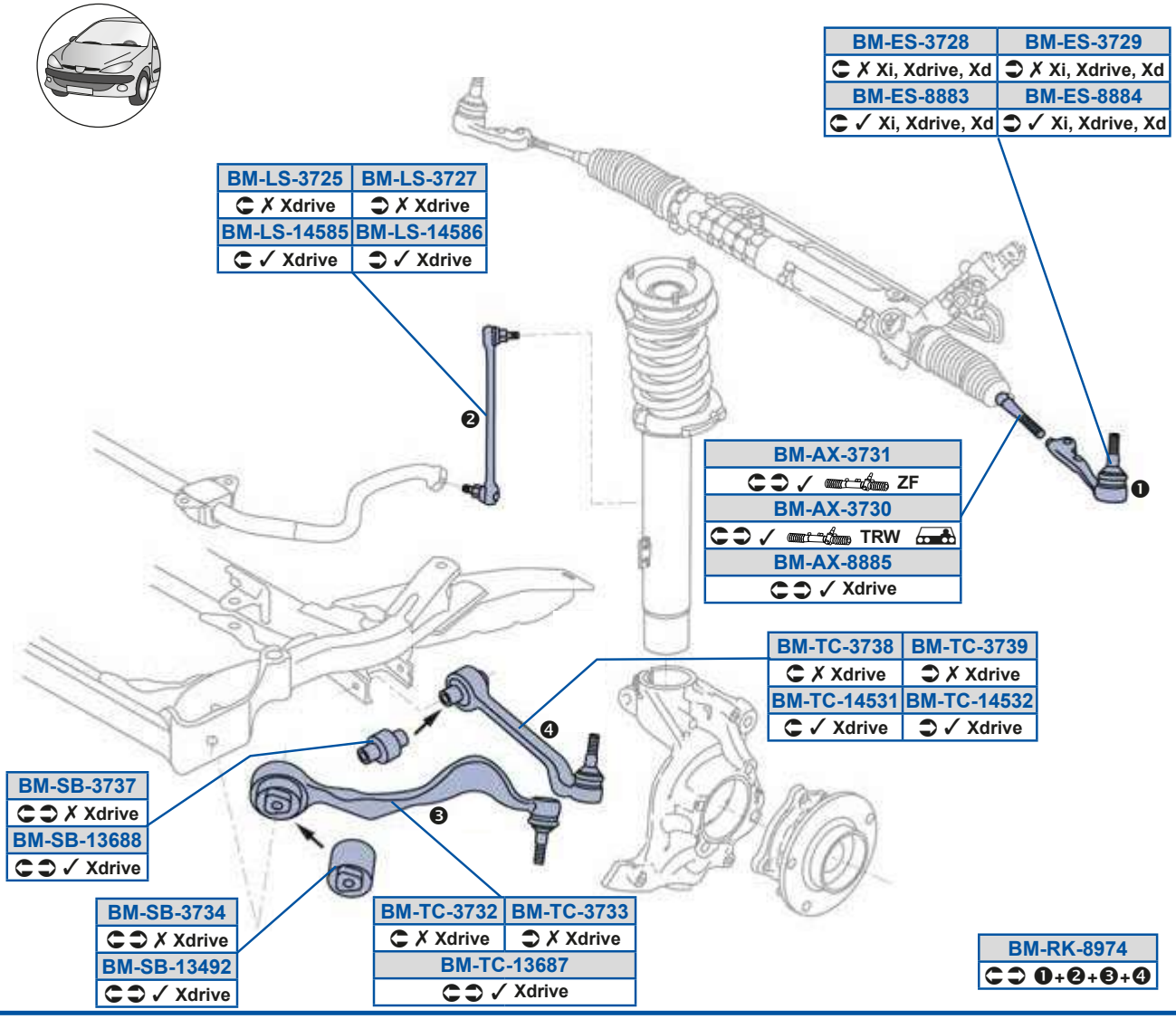
BM-ES-3728
✗ Xi, Xdrive, Xd
BM-ES-3729
✗ Xi, Xdrive, Xd
BM-ES-8883
✓ Xi, Xdrive, Xd
BM-ES-8884
✓ Xi, Xdrive, Xd
BM-LS-3725
✗ Xdrive
BM-LS-3727
✗ Xdrive
BM-LS-14585
✓ Xdrive
BM-LS-14586
✓ Xdrive
BM-AX-3731
✓ ZF
BM-AX-3730
✓ TRW
BM-AX-8885
✓ Xdrive
BM-TC-3738
✗ Xdrive
BM-TC-3739
✗ Xdrive
BM-TC-14531
✓ Xdrive
BM-TC-14532
✓ Xdrive
BM-SB-3737
✗ Xdrive
BM-SB-13688
✓ Xdrive
BM-SB-3734
✗ Xdrive
BM-SB-13492
✓ Xdrive
BM-TC-3732
✗ Xdrive
BM-TC-3733
✗ Xdrive
BM-TC-13687
✓ Xdrive
BM-RK-8974
❶+❷+❸+❹

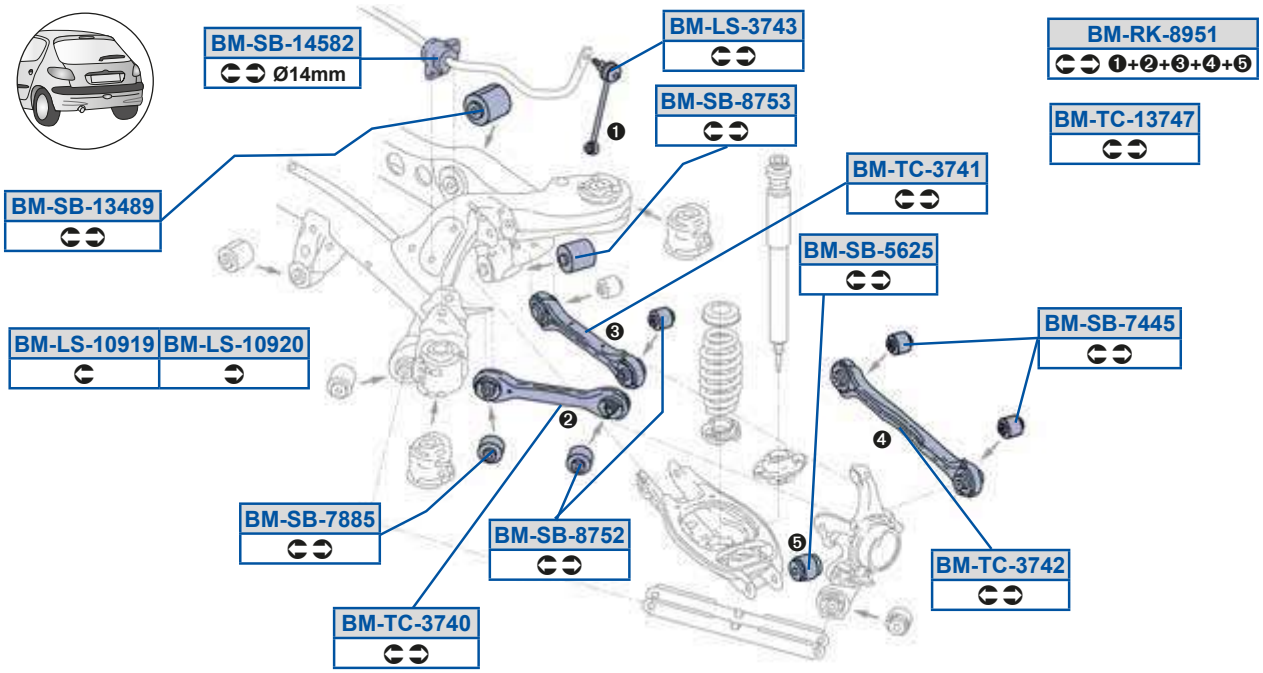
BM-SB-14582
Ø14mm
BM-LS-3743
BM-RK-8951
❶+❷+❸+❹+❺
BM-SB-8753
BM-TC-13747
BM-TC-3741
BM-SB-13489
BM-SB-5625
BM-LS-10919
BM-LS-10920
BM-SB-7445
BM-SB-7885
BM-SB-8752
BM-TC-3742
BM-TC-3740

P[5eQ5AEAA
A889B7AD9E73A889DEDAE7B

P[5eQ5AEAF
A889DEDADGG3A889DEDGEGA

P[5eQ5AEAG
A8899B7CFD73A889DEDAE77

P[5eQ5AEB8
AAA9DEDCB9C

P[5eQ5AEB9
AAA9DEDABEA3AAA9DEEEGF7

P[5eQ5AEB>
AAA9DEDABE8

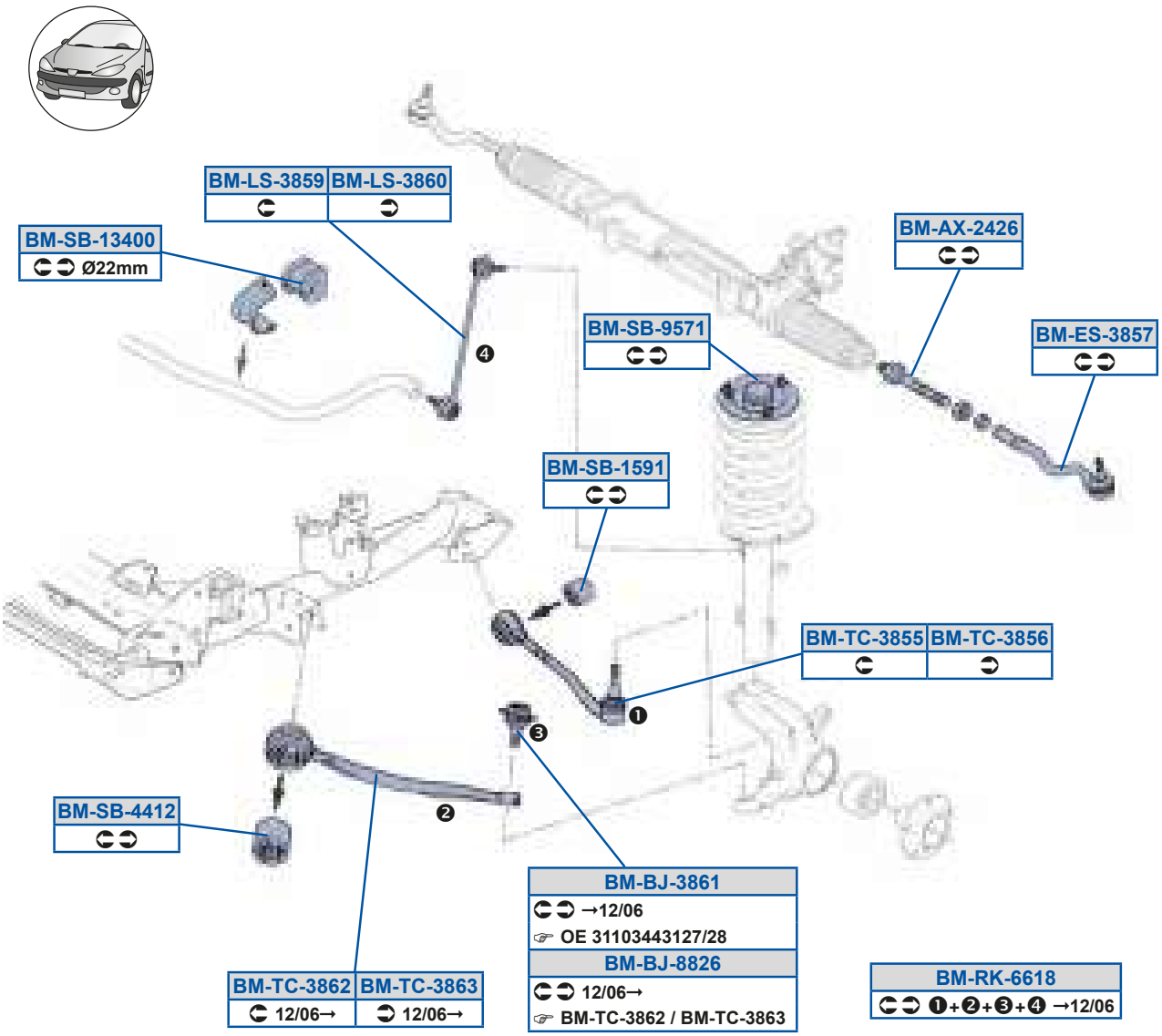
BM-LS-3859
BM-LS-3860
BM-SB-13400
Ø22mm
BM-AX-2426
BM-SB-9571
BM-ES-3857
BM-SB-1591
BM-TC-3855
BM-TC-3856
BM-SB-4412
BM-BJ-3861
→12/06
OE 31103443127/28
BM-BJ-8826
12/06→
BM-TC-3862 / BM-TC-3863
BM-TC-3862
12/06→
BM-TC-3863
12/06→
BM-RK-6618
❶+❷+❸+❹ →12/06

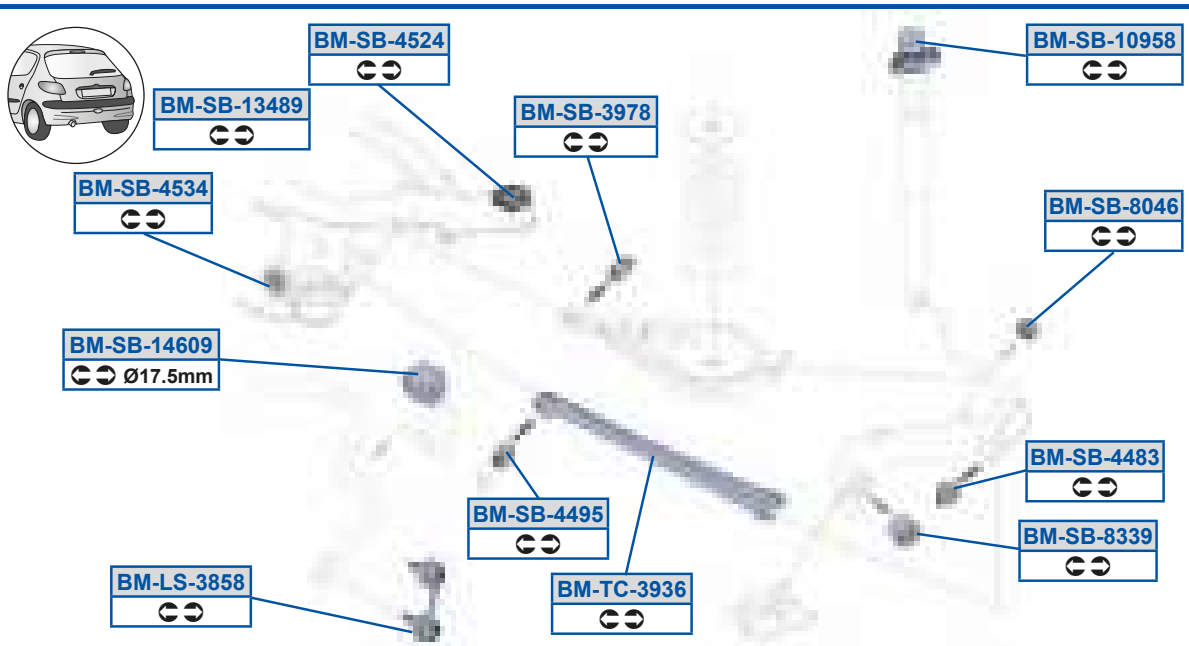
BM-SB-4524
BM-SB-10958
BM-SB-13489
BM-SB-3978
BM-SB-4534
BM-SB-8046
BM-SB-14609
Ø17.5mm
BM-SB-4483
BM-SB-4495
BM-SB-8339
BM-LS-3858
BM-TC-3936

MOOG

P[5Oi 5>B>D
A998DEC89EE /40

P[5PX5AFD9
A887AB89E9D3A887AB8FAB8

P[5PX5FF>D
A8877ADABED3A887AADABED

P[5Sd5AFCE
A9A7AB8F9793A9B8AB8ABED

P[5Zd5AFCF
AAC7AB8A8GE3AAC7AB8B9GE

P[5Zd5AFCG
A8A7AB8A9783A8A7AB8B9GG

P[5Zd5AFD8
A8A7AB8A9793A8A7AB8BA77

P[5cY5DD9F

P[5dP598GCF

P[5dP59AB88
A8A7AB7B7DC

P[5dP59ABFG
AA8EDED79FF3AA8EDEE7FDD

P[5dP59BD8G
AAC7AB7BD8D

P[5dP59CG9
A889889BD99

P[5dP5AGEF
AAA987G99BE3AAA988AECE8

P[5dP5BB9>
A8897A7EFF9

P[5dP5BBFA
AAA988ADA883AAA9DEE8F9F

P[5dP5BBGC
AAA987G99BF3AAA988AFAFA

P[5dP5BC>B
AAA887G9C8E3AAA8DEE7EF8

P[5dP5BCAB
AA8E87GA8EC3AA8EDEE7EFF

P[5dP5F8BD
AAA8AB8FAB9

P[5dP5FAAG
AAA987GE77G3AAA988AEF7D

P[5dP5GCE9
A8AA87G8E7G3A8AA87GBD8D

P[5eQ5AFCC
A887AB898AC3A887AB8C79E

P[5eQ5AFCD
A887AB898AD3A887AB8C79F

P[5eQ5AFD>
A8877ADABEE3A887AB898AE

P[5eQ5AFDA
A8877ADABEF3A887AB898AF

P[5eQ5AGAD
AAA7AB88DC83AAA987G99AE

i A 0T; C1	8G798	i B 0T; D1	8C79A

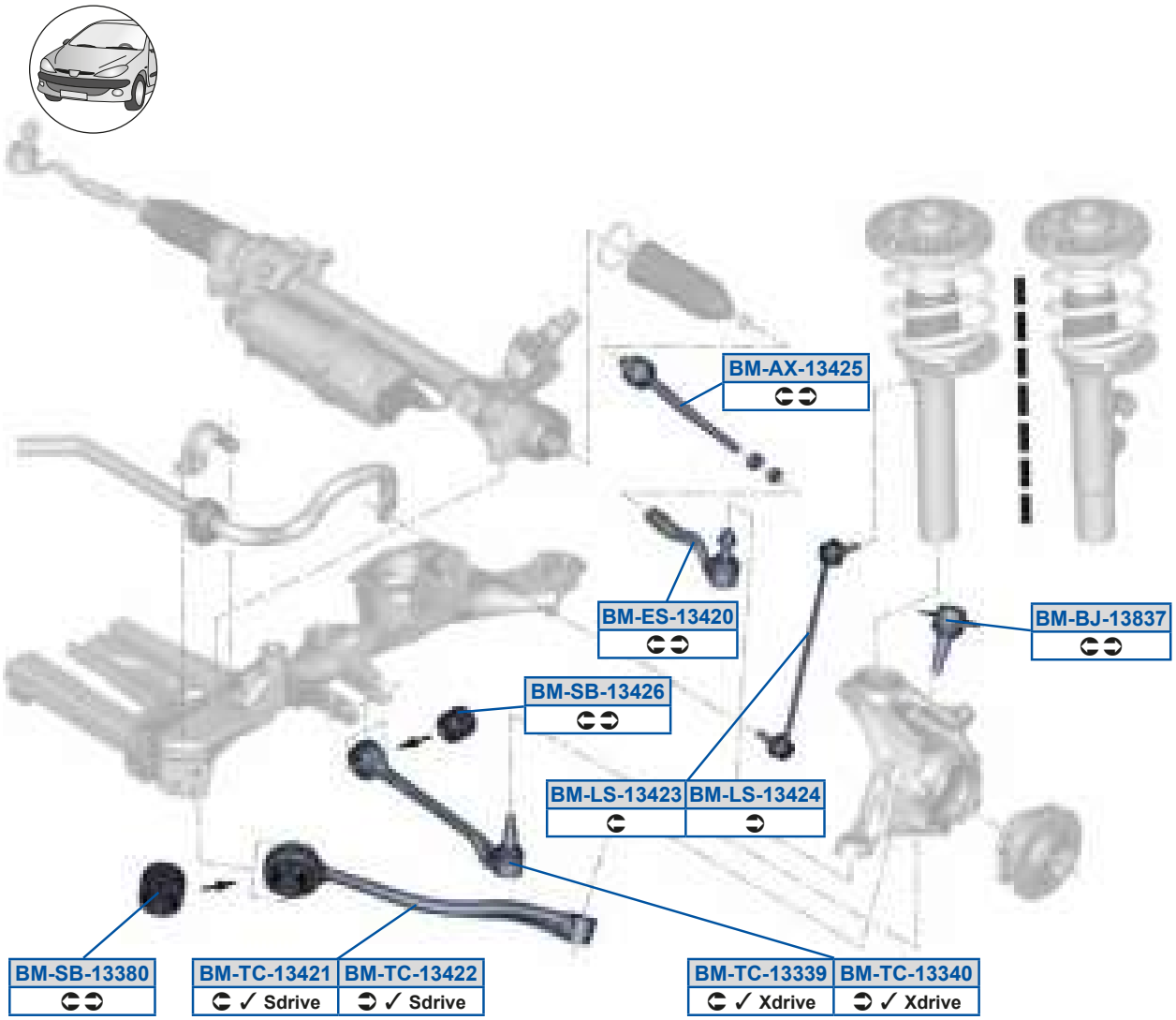

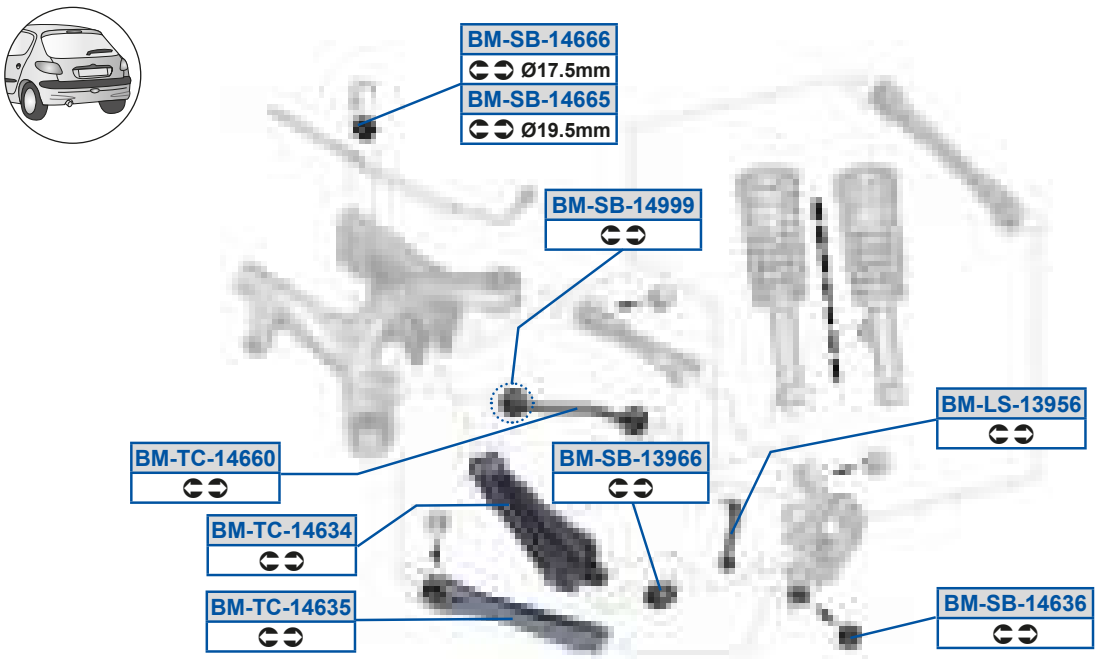

MOOG

P[5Oi 59AB>C
A987DEFEBE9 /40

P[5dP59AGDD
AAA9DEG7BGA

P[5eQ59AB>>
A887DEFEDEB

P[5PX59AFAE
A887DEFEDDC

P[5dP59BDAD
AAA7DEFDGF7

P[5eQ59BDAB
AAA9DEGCF89

P[5Sd59AB>8
A987DEG9DEB

P[5dP59BDDC
AACCDEFF7DA

P[5eQ59BDAC
AAA9DEFDGEF

P[5Zd59AB>A
A8A7DEFE8DA

P[5dP59BDDD
AACCDEFF7CF

P[5eQ59BDD8
AAA7DEFDGG8

P[5Zd59AB>B
A8A7DEFE8DB

P[5dP59BGGG
AAA7DEFDGG8 /40

P[5Zd59AGCD
AACCDEG7A9B

P[5eQ59AAAG
A889DEFEDDG

P[5dP59AAF8
A887DEFDGC8

P[5eQ59AAB8
A889DEFEDE7

P[5dP59AB>D
A887DEFDGCG

P[5eQ59AB>9
A887DEFEDEA

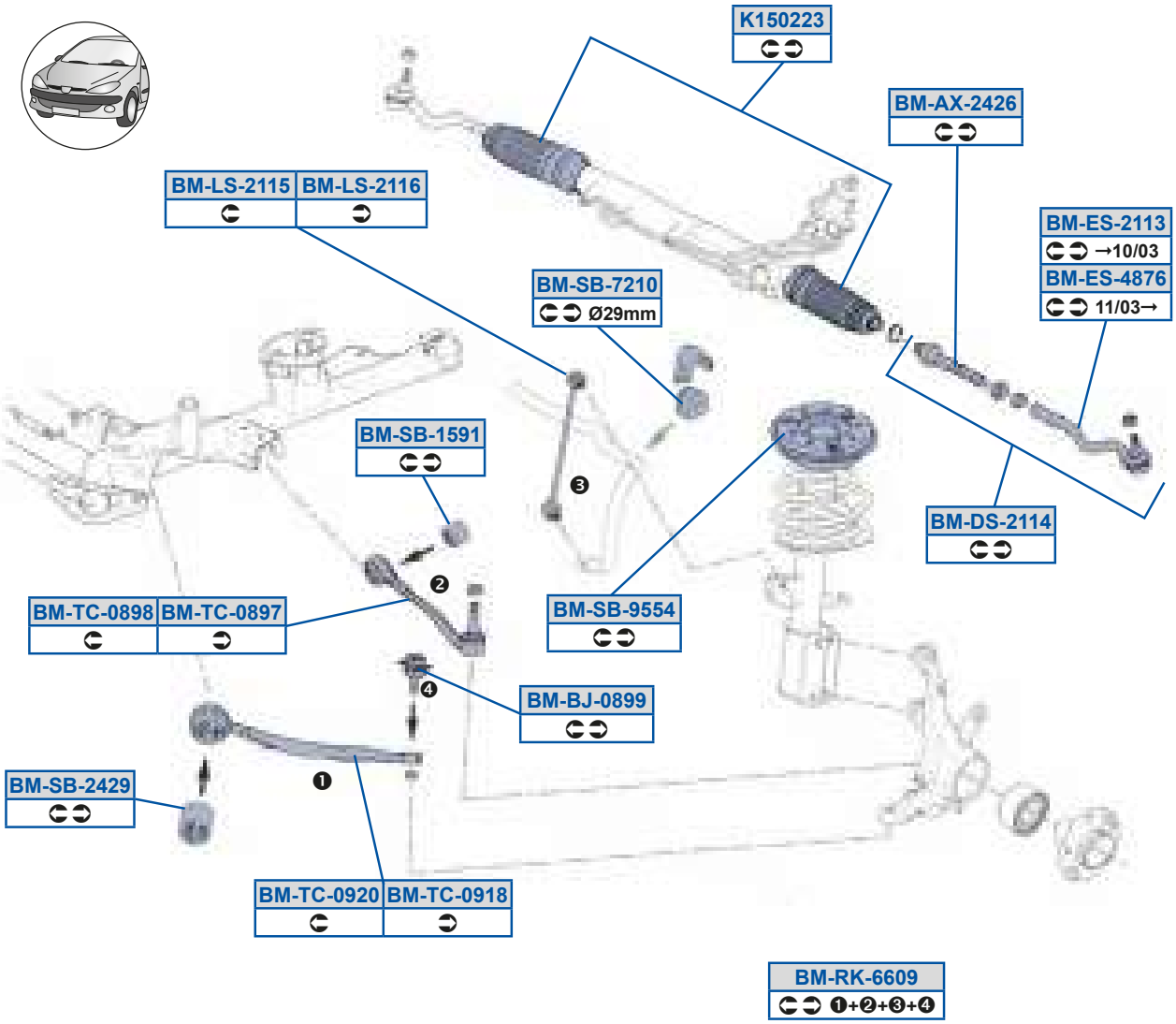
K150223
BM-AX-2426
BM-LS-2115
BM-LS-2116
BM-ES-2113
→10/03
BM-ES-4876
11/03→
BM-SB-7210
Ø29mm
BM-SB-1591
BM-DS-2114
BM-TC-0898
BM-TC-0897
BM-SB-9554
BM-BJ-0899
BM-SB-2429
BM-TC-0920
BM-TC-0918
BM-RK-6609
❶+❷+❸+❹

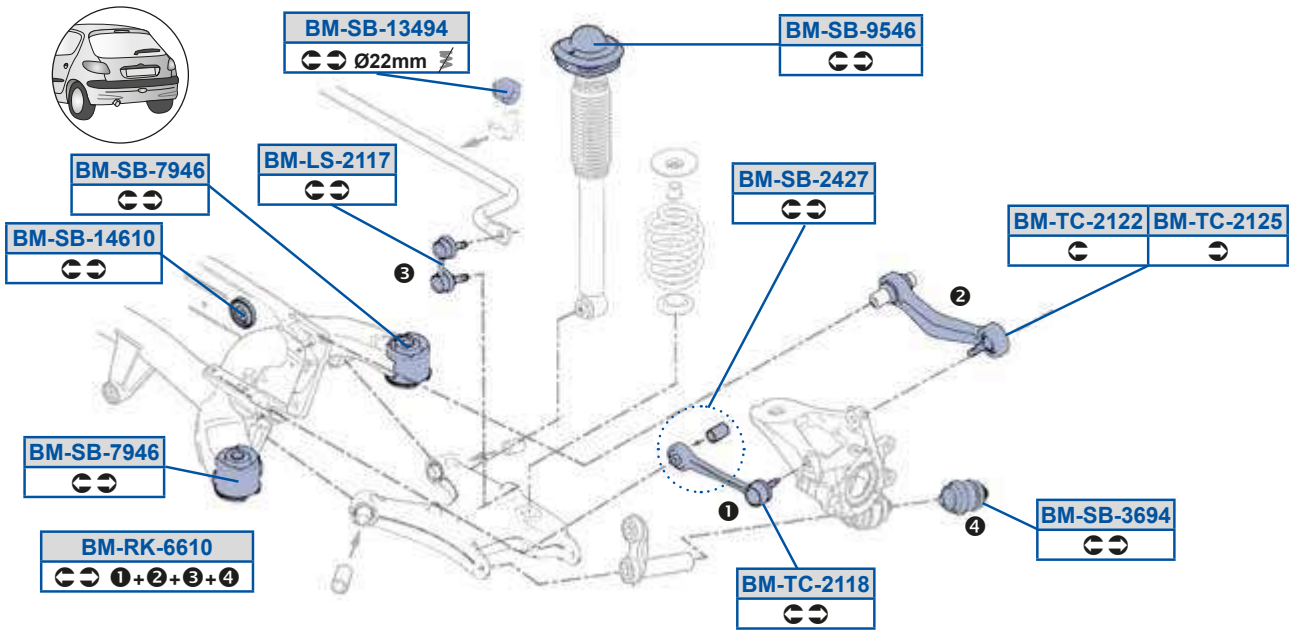
BM-SB-13494
Ø22mm
BM-SB-9546
BM-SB-7946
BM-LS-2117
BM-SB-2427
BM-SB-14610
BM-TC-2122
BM-TC-2125
BM-SB-7946
BM-SB-3694
BM-RK-6610
❶+❷+❸+❹
BM-TC-2118

P[5Oi 5>B>D
A998DEC89EE /40

P[5PX58FGG
A88987GDB9C3A889DECDBG8

P[5Rd5>99B
A987DEEBAAD3A998DEC89EE

P[5Sd5>99A
A99887GDA9E3A998DED7ACB

P[5Sd5BFED
A987DEEBAAC3A998DED7ACB

P[5Zd5>99C
A8ACDEC7E7A

P[5Zd5>99D
A8ACDEC7E7B

P[5Zd5>99E
AACC87GDEAC

P[5c Y5DD8G

P[5c Y5DD98

P[5dP59ABGB
AACC87GDFGA

P[5dP59BD98
AA8E87GD97E3AA8EDEE7BCD

P[5dP59CG9
A889889BD99

P[5dP5>B>E
AAA9DEEBEGD /40

P[5dP5>B>G
A88987GDAE93A889DEDGE8C

P[5dP5ADGB
AAA987G7C7B3AAA987GCDA8

P[5dP5E>98
A8AC87GE798

P[5dP5EGBD
AAA887GADD93AAA8DEE7BCB

P[5dP5GCBD
AAC987GE9E9

P[5dP5GCCB
A8AA87G7D893A8AA87GDA88

P[5eQ58FGE
A88987GDA8D3A889DED79ED

P[5eQ58FGF
A88987GDA8C3A889DED79EC

P[5eQ58G9F
A88987GD8E73A889DEDGE8F

P[5eQ58G>8
A88987GD8DG3A889DEDGE8E

P[5eQ5>99F
AAA987GCB8B3AAA9DEDF9DG

P[5eQ5>9>>
AAA987GCB883AAA9DEDF9EA

P[5eQ5>9>C
AAA987GCB893AAA9DEDF9EB

Y9C8>>A
A98ADECACBD

i C 0SE81	9; 78D 8E79A	i D 0SE94SE; 1	8D78E 8D79B
i D rSE9orSE; o	8C78F 8D79B		

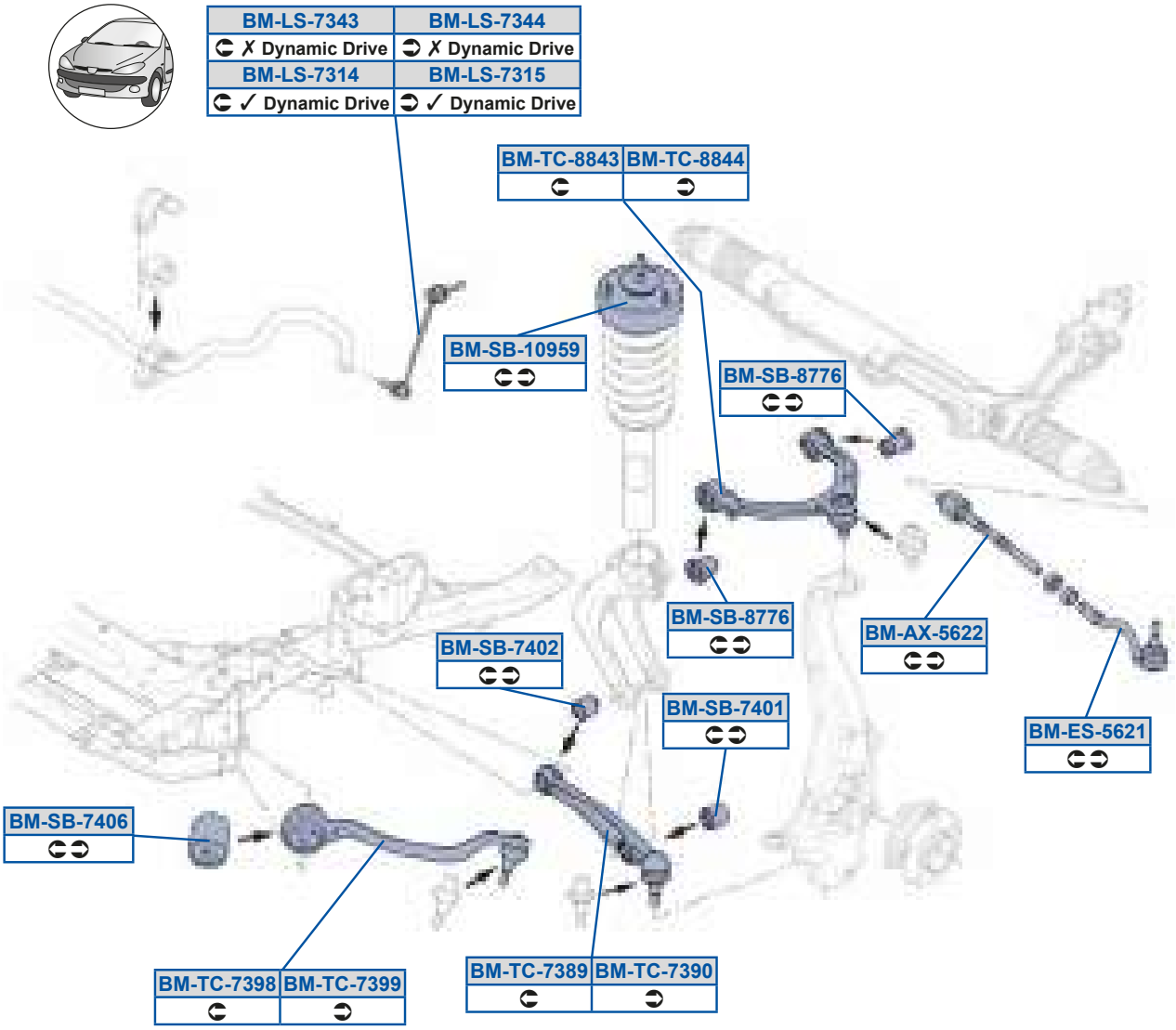

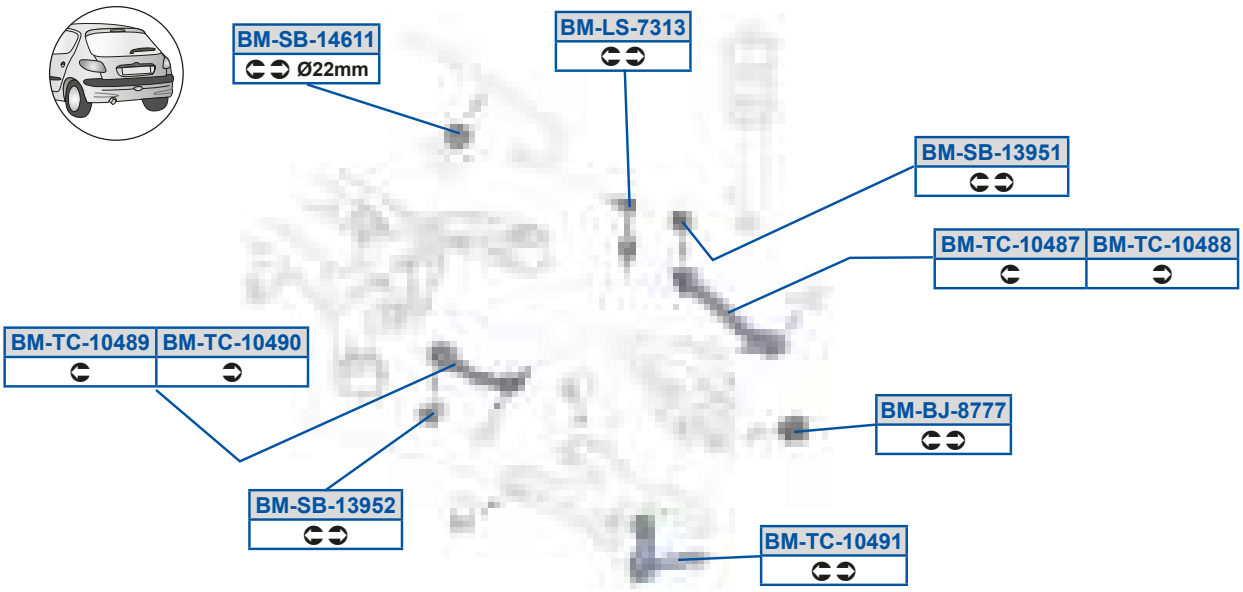

P[5Oi 5CD>>
A998DEEAEB8 /40

P[5PX5FEEE
AAA9DEE7GFC

P[5Sd5CD>9
A987DEF7GFB3A987DEGABGE

P[5Zd5EA9A
AACCDEE8GAE3AACCDFCED9D

P[5Zd5EA9B
AE88DEE8G9G3AE88DFCED9E

P[5Zd5EA9C
AE88DEE8GA73AE88DFCED9F

P[5Zd5EABA
A8ACDEEA79A3A8ACDFCED9A

P[5Zd5EABB
A8ACDEEA79B3A8ACDFCED9B

P[5dP598GCG

P[5dP59AGC9
AAA9DEE7GDG /40

P[5dP59AGC>
AAA9DEEGAFE /40

P[5dP59BD99
AACCDEE97F9

P[5dP5EB89
A887DEE8FGE3A889DFCCC7G

P[5dP5EB8>
A887DEE88GB

P[5dP5EB8D
A887DEEF78C

P[5dP5FEED
A889DEEDB8E /40

P[5eQ598BFE
AAA9DEE7GDG

P[5eQ598BFF
AAA9DEE7GE7

P[5eQ598BFG
AAA9B7BDG8E3AAA9DEE7GDA

P[5eQ598BG8
AAA9B7BDG8F3AAA9DEE7GDB

P[5eQ598BG9
AAA9DEEBBED

P[5eQ5EAFG
A889DEE8FGA

P[5eQ5EAG8
A889DEE8FGB

P[5eQ5EAGF
A889DEEAGBG

P[5eQ5EAGG
A889DEEAGC7

P[5eQ5FFBA
A889DEEDB8E

P[5eQ5FFBB
A889DEEDB8F

i C 0T9C1	9979;	i C 0T9C4TFC1	8E79A

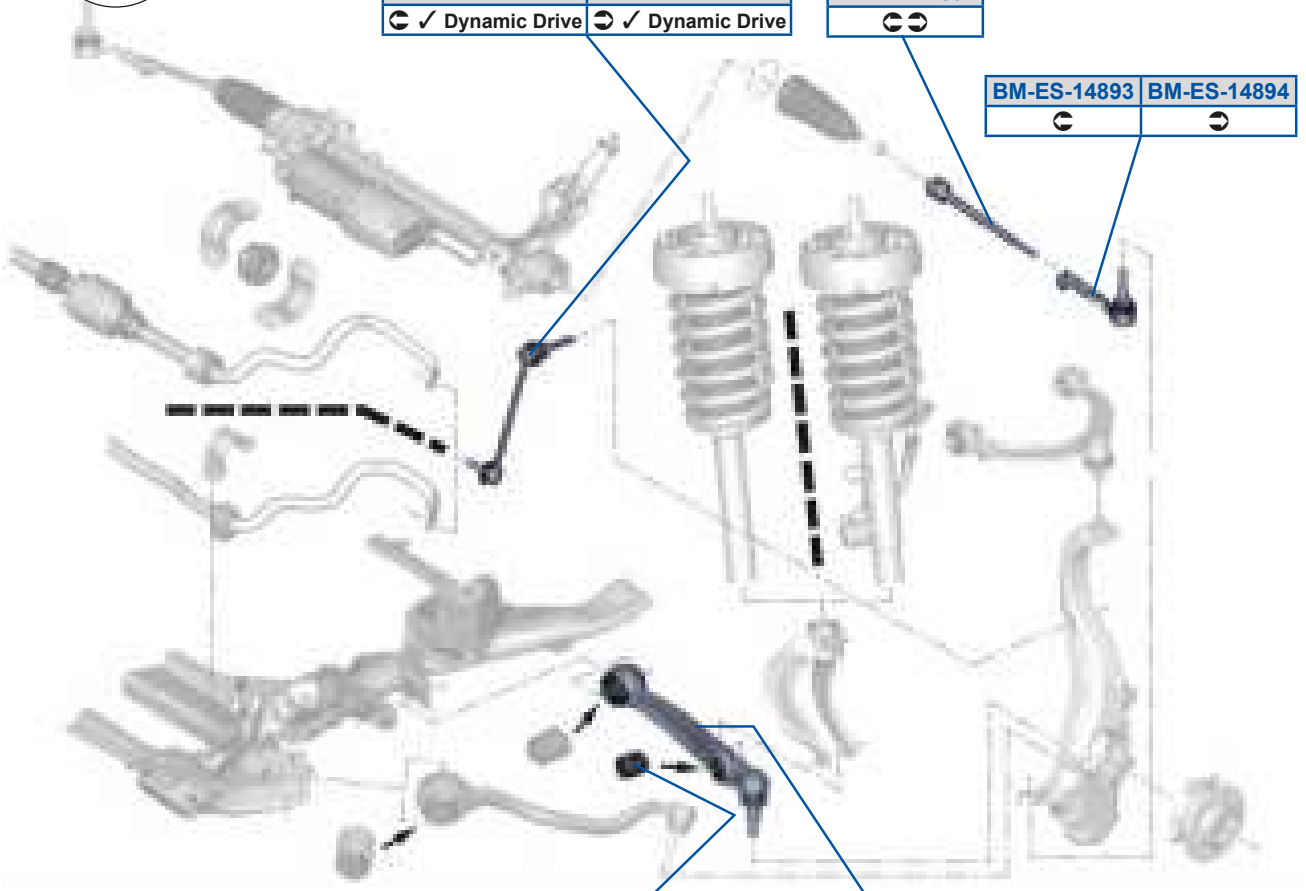

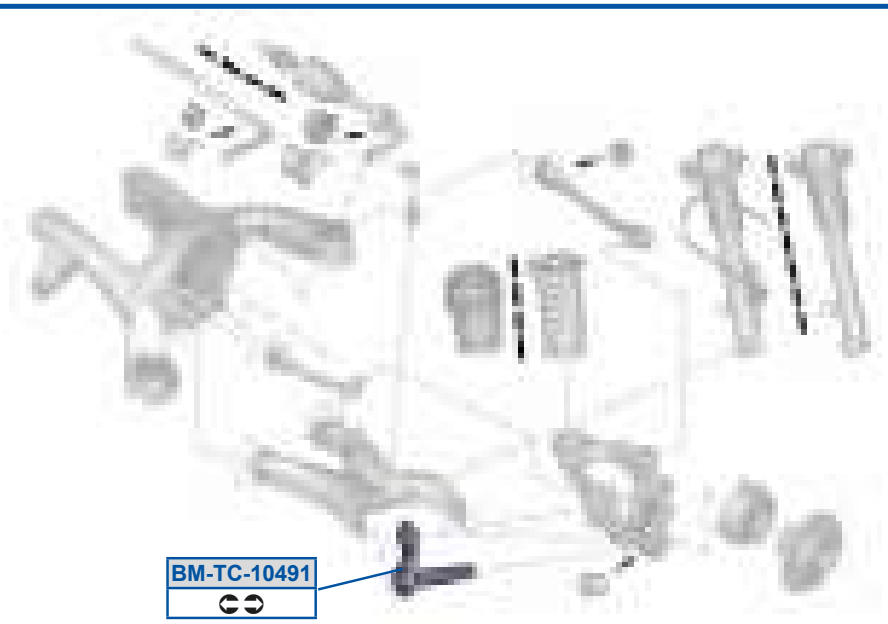

MOOG

P[5Oi 59BFG>
A987DFCFEAC /40

P[5Sd59BFGA
A987DFCFEAD3A987DFDAFCF

P[5Sd59BFGB
A987DFCFEAF3A987DFDAFD7

P[5Zd5EA9B
AE88DEE8G9G3AE88DFCED9E

P[5Zd5EA9C
AE88DEE8GA73AE88DFCED9F

P[5Zd5EABA
A8ACDEEA79A3A8ACDFCED9A

P[5Zd5EABB
A8ACDEEA79B3A8ACDFCED9B

P[5dP5EB89
A887DEE8FGE3A889DFCCC7G

P[5eQ598BG9
AAA9DEEBBED

P[5eQ59BFGG
A889DFDBF98

P[5eQ59BG88
A889DFDBF99

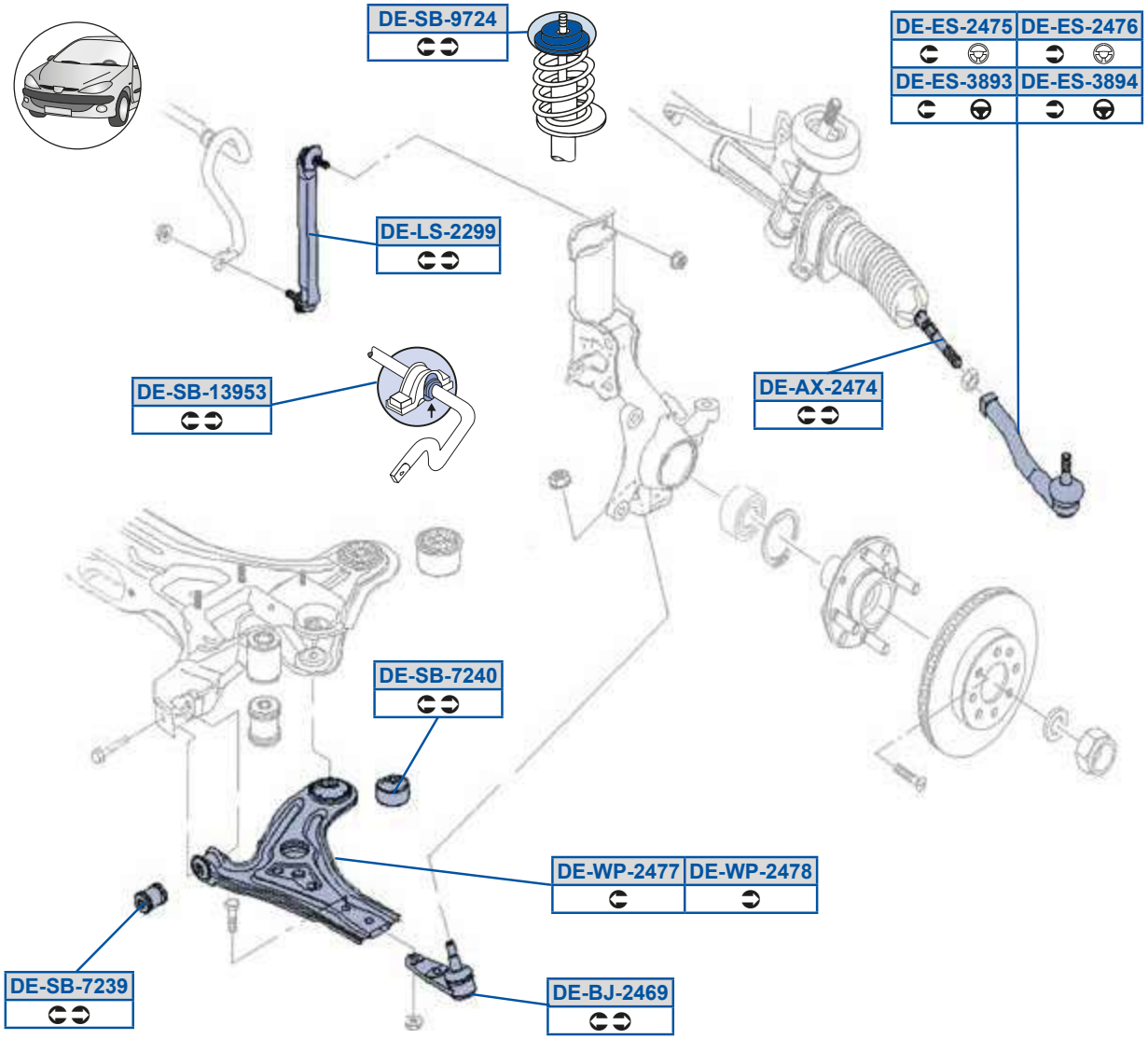
DE-SB-9724
DE-ES-2475
DE-ES-2476
DE-ES-3893
DE-ES-3894
DE-LS-2299
DE-SB-13953
DE-AX-2474
DE-SB-7240
DE-WP-2477
DE-WP-2478
DE-SB-7239
DE-BJ-2469

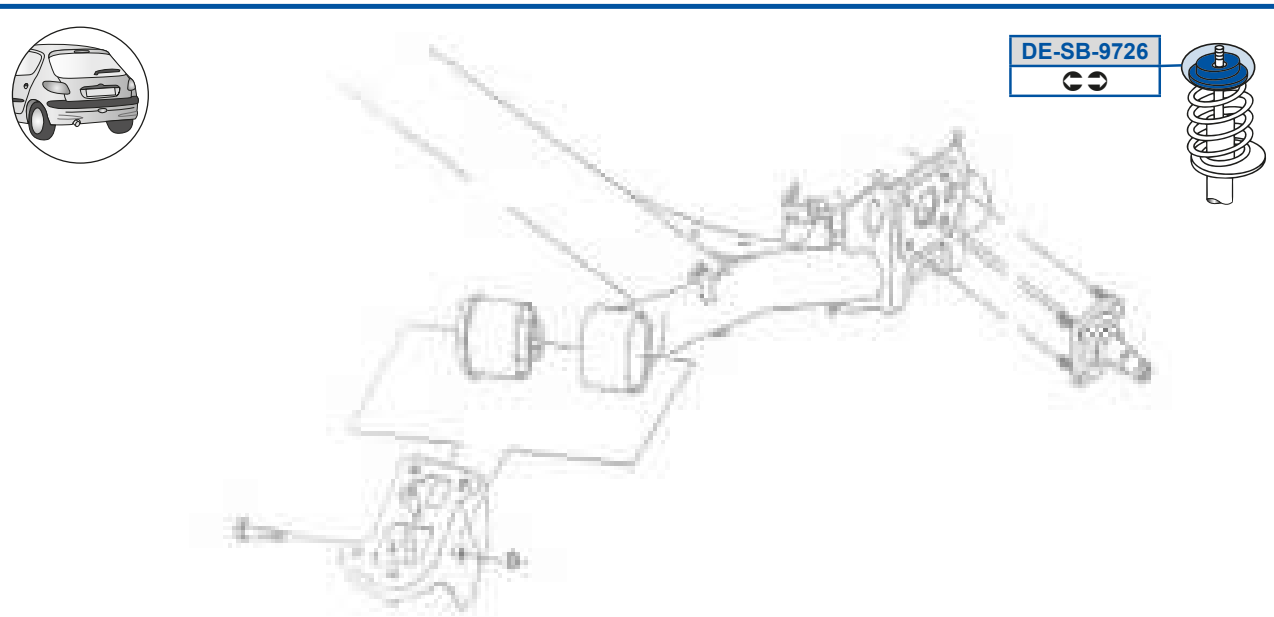
DE-SB-9726

RS5Oi 5>BEB
GDCACA77

RS5dP5E>AG
GDCAC7F8 /40BGDCAC7F9 /40

RS5PX5>BDG
GDCAC7FG

RS5dP5E>B8
GCBEGEDA3GDCAC7F8 /40

RS5Sd5>BEC
GAEB7D993GAEB7E99

RS5dP5GE>B
GDCAC7873GDCAC788

RS5Sd5>BED
GAEB7D9A3GAEB7E9A

RS5dP5GE>D
GDBCDE8A3GDBCDE8C

RS5Sd5AFGA
GAEB7D993GAEB7E99

RS5h a5>BEE
GDCAC7F83GDF8CFGA

RS5Sd5AFGB
GAEB7D9A3GAEB7E9A

RS5h a5>BEF
GDCAC7F93GDF8CFGB

RS5Zd5>>GG
GCGGBGEE3GDAG8FEC

RS5dP59AGCA
GDBAC9G93GDBAC9GC

QVSgc_ZSe

QOaeWO 0Q9884Q9B81	8D78D		

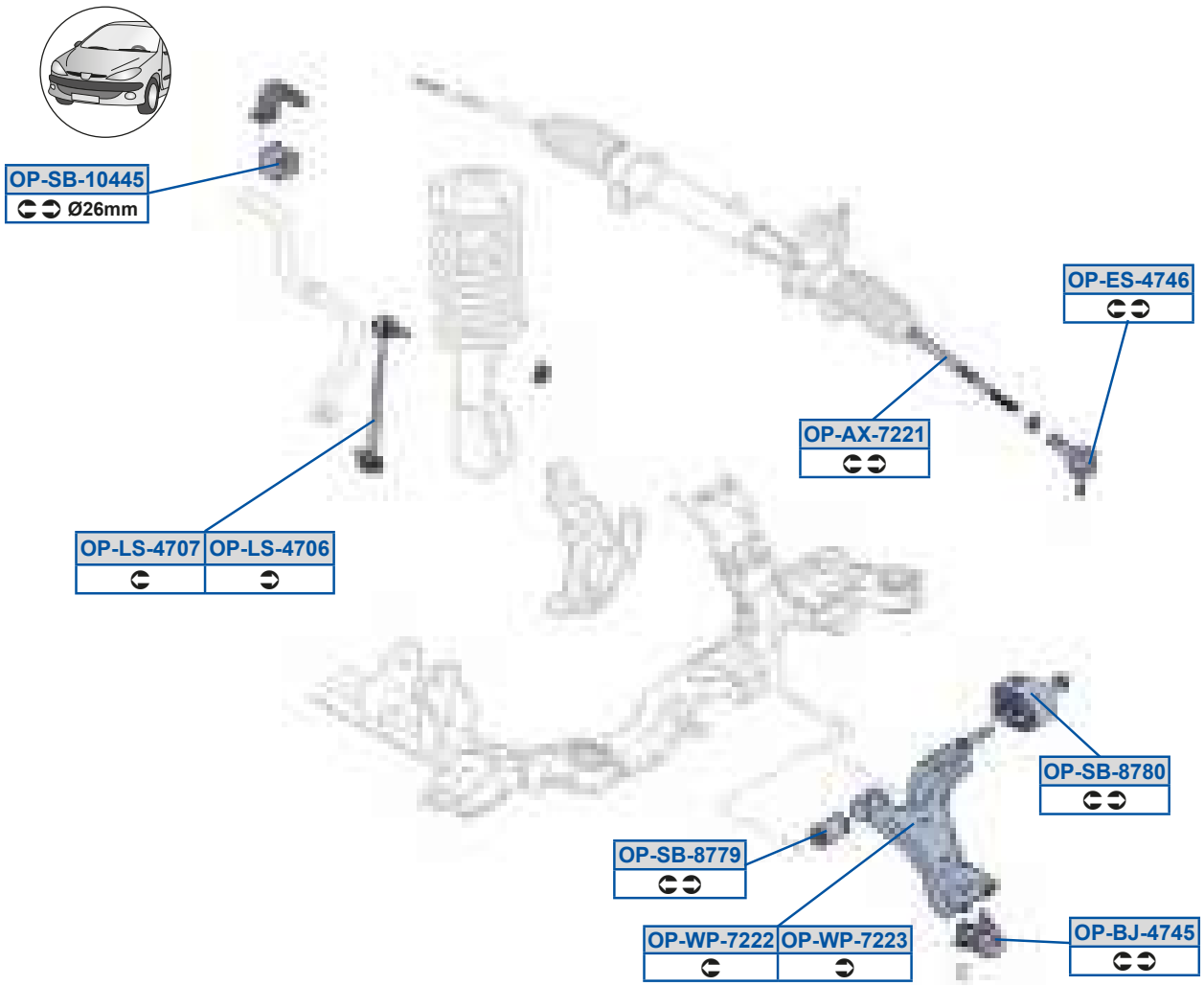

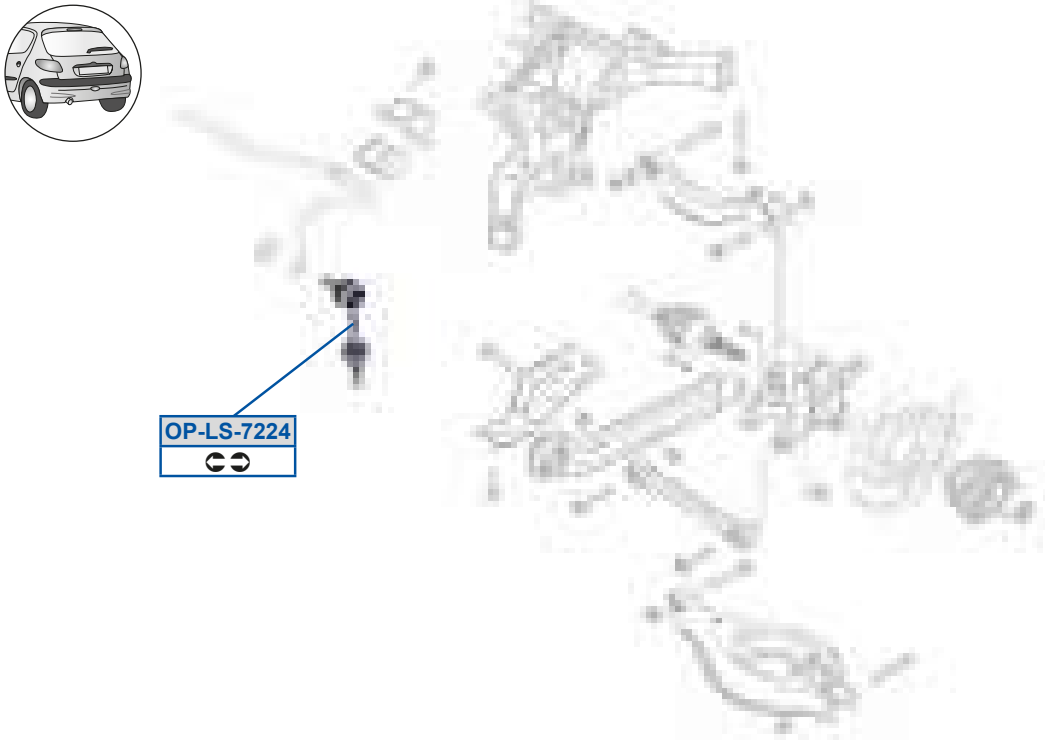

MOOG

_ a5Oi 5E>>9
GCGCBECB /40

_ a5dP5FEF8
GDF8G8D8 /40BGDF8G8D9 /40

_ a5PX5BEBC
8C9GAG9B3BF7DA77 /40

_ a5h a5E>>>
BF7DA773BF87FA8

_ a5Sd5BEBD
BF7AB9G3GDD9DDDE

_ a5h a5E>>A
BF7DA783BF89FE7

_ a5Zd5BE8D
99EBB88G3BF7DA7C

_ a5Zd5BE8E
99EBB88F3BF7DA7B

_ a5Zd5E>>B
BF7BDB93GDD9D8C7

_ a5dP598BBC
GDF87EC8

_ a5dP5FEEG
GDF8G8D8 /40BGDF8G8D9 /40

QVSgc_ZSe

Qcf l S 0KA881	8C78G	Qcf l S Vt vÉut v 0KA8C1	8D799
Qcf l S d t é h t' 0KA8F1	8F79;		

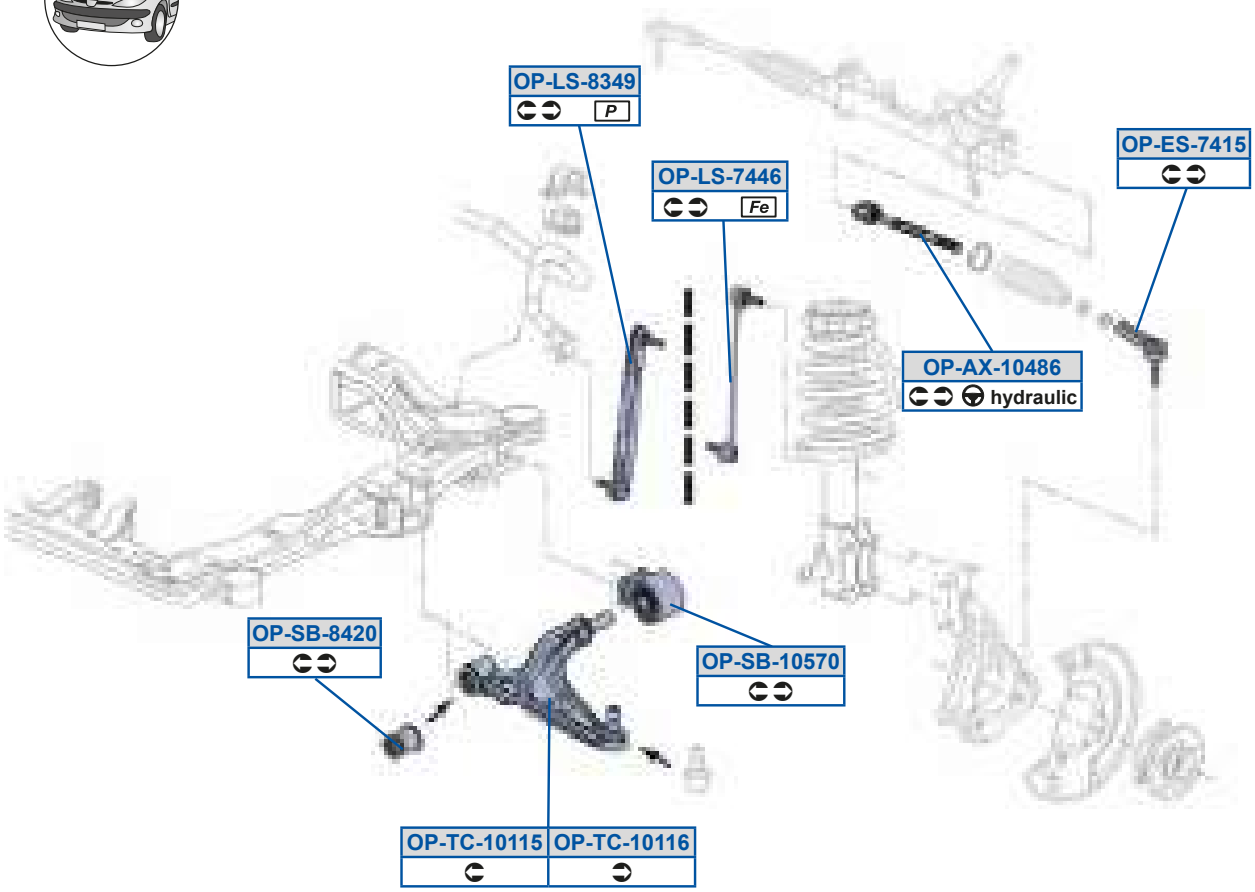

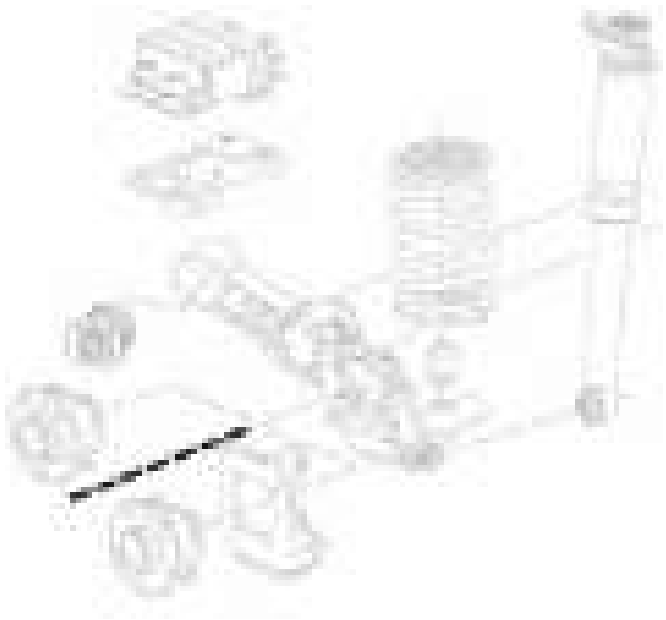

MOOG

_ a5Oi 598BFD
8A9EFACF3G9777E

_ a5Sd5EB9C
8A9EFACG38A9FDDFD

_ a5Zd5EBBD
8A9CF7C93AC7D8F

_ a5Zd5FABG
8A98G8B83AC7D8E

_ a5dP598CE8
8AAAB7983AC987F

_ a5dP5FB>8
8A98G7G738AA98AB9

_ a5eQ59899C
8A9E9D7C38AA8AEBG

_ a5eQ59899D
8A9E9D7D38AA8AEC7

SaWQO 0YZ9r 1	8978C	SgO] RO	8A78C

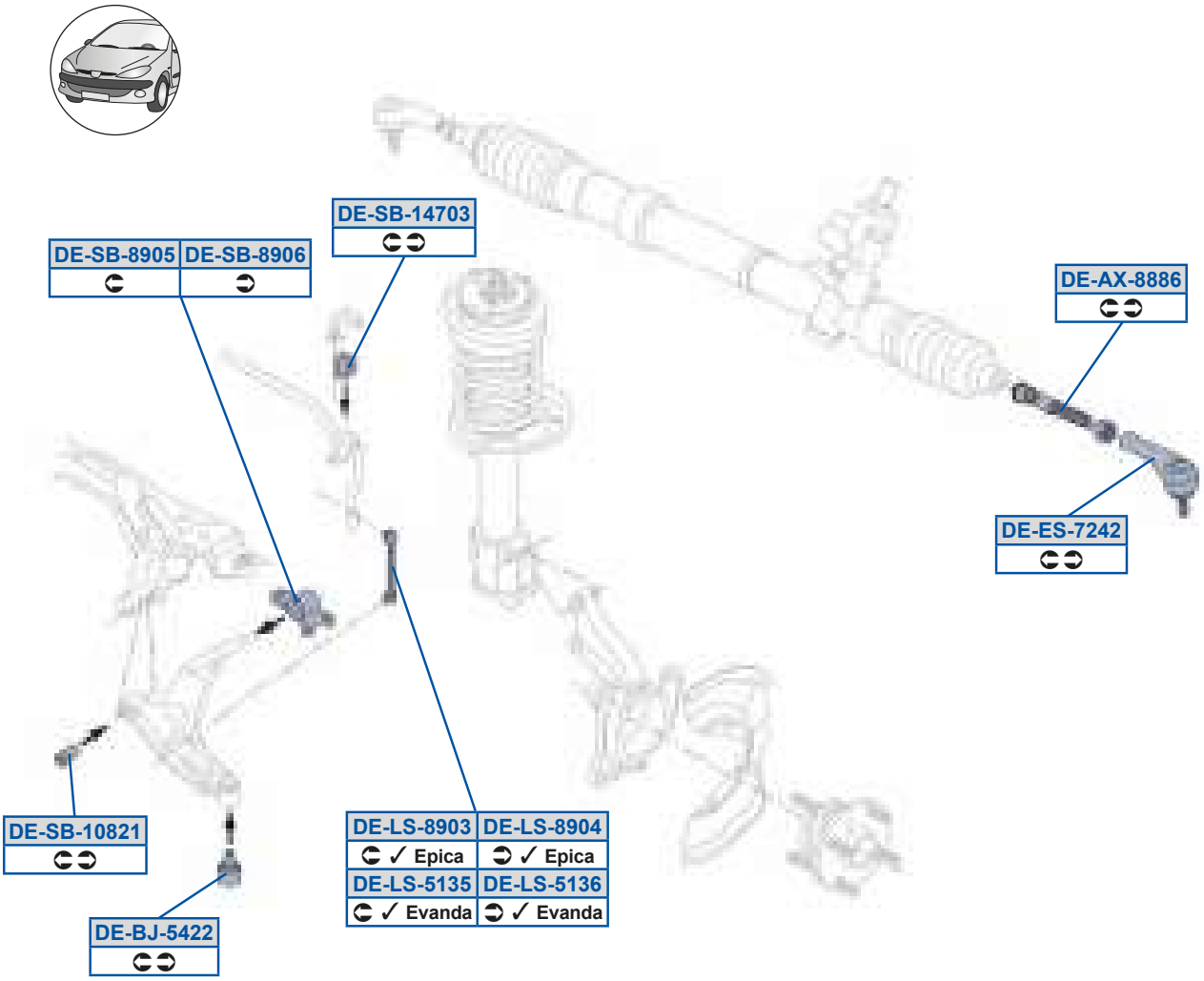

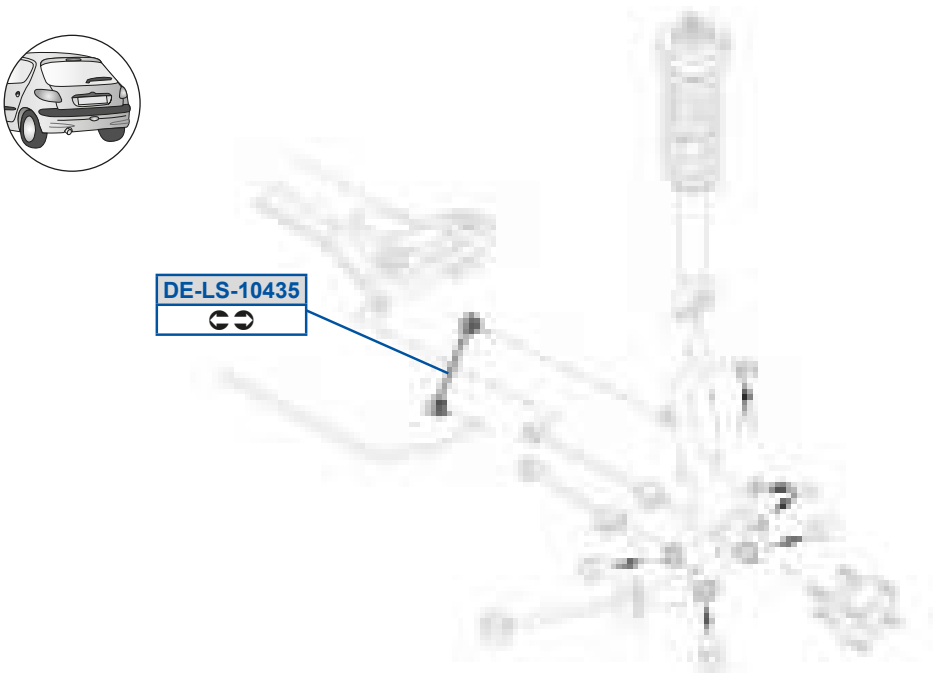

MOOG

RS5Oi 5FFFD
GAEB7E78

RS5dP598F>9
GDA9FBAB

RS5PX5CB>>
G988GFA73GDA9FBAE

RS5dP59BE8A
GDAGBGA73GDBCB8BD

RS5Sd5E>B>
GAEB7E87

RS5dP5FG8C
GDAFFDB73GDGE77EB

RS5Zd598BAC
GDDAGG87

RS5dP5FG8D
GDAFFDB83GDGE77EC

RS5Zd5C9AC
GD99CFCG

RS5Zd5C9AD
GD99CFCF

RS5Zd5FG8A
GDDAGG7B

RS5Zd5FG8B
GDDAGG7C

YOZ_d	8A78C	YOZ_d dt	8A78C

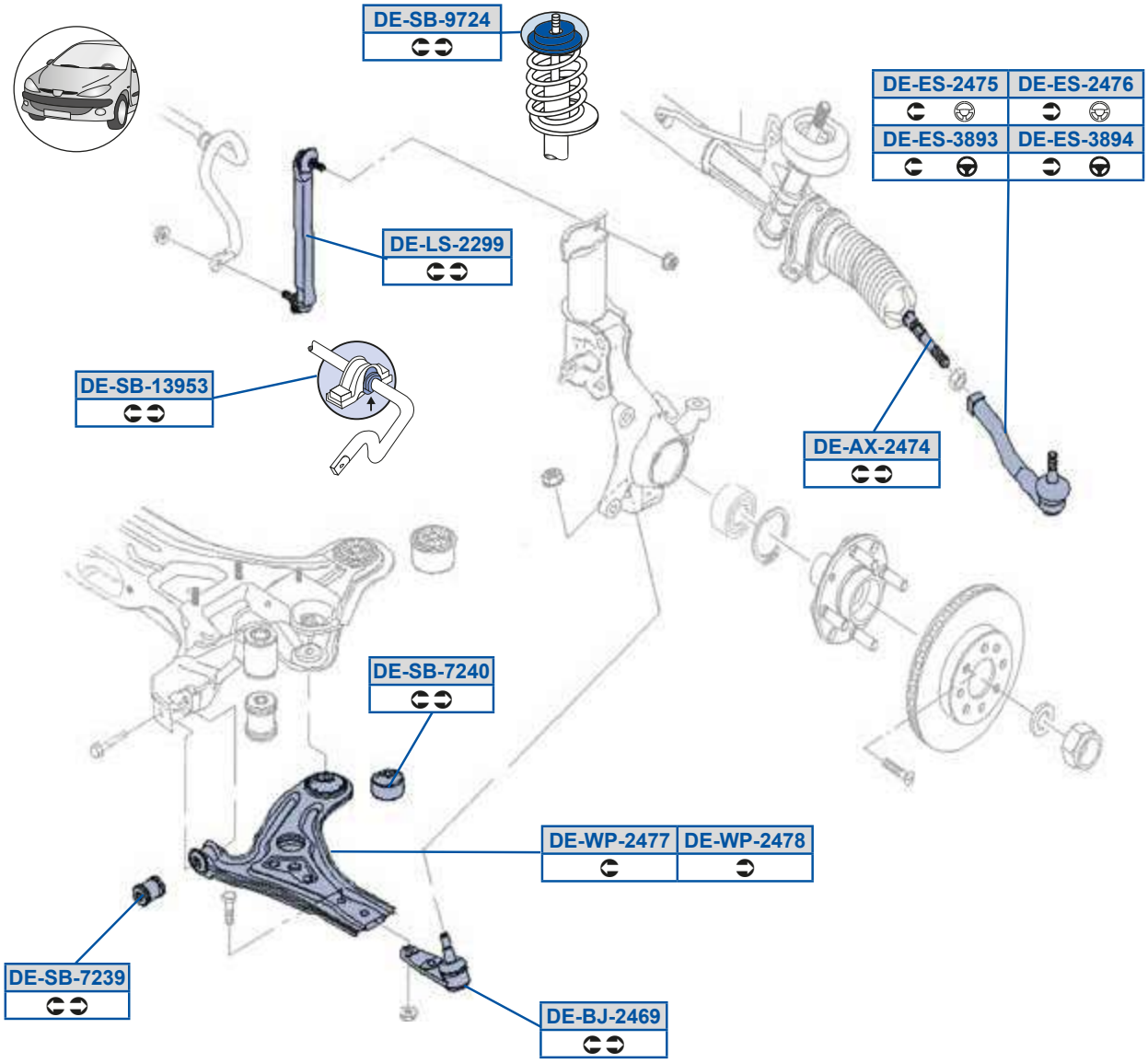

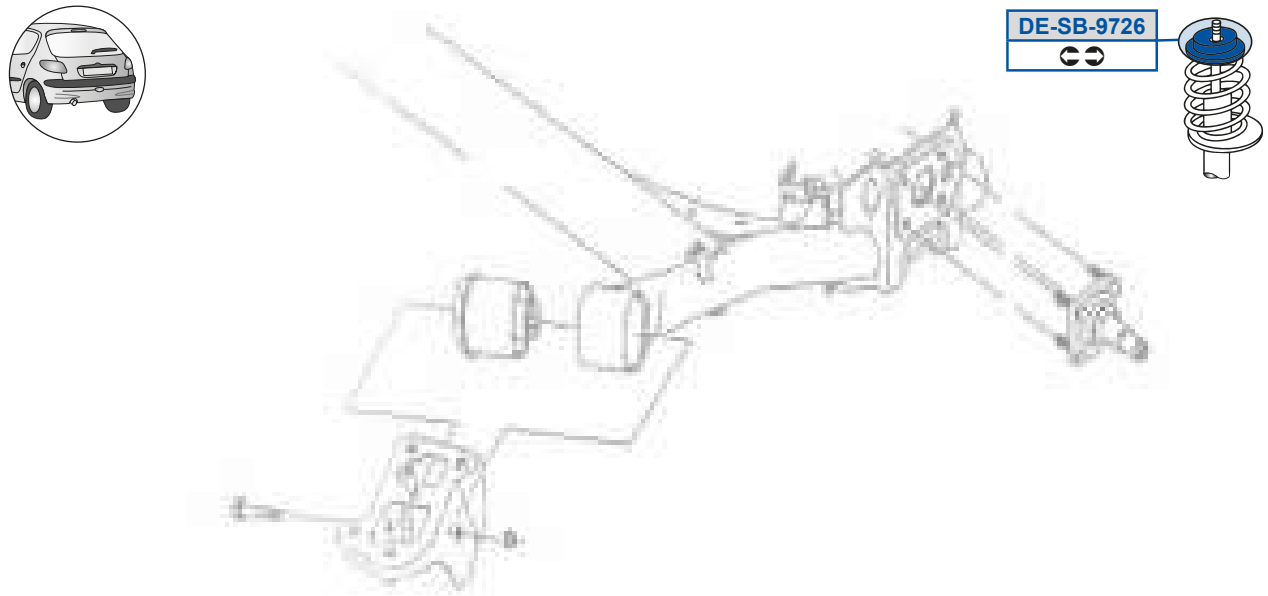

RS5Oi 5>BEB
GDCACA77

RS5dP5E>AG
GDCAC7F8 /40BGDCAC7F9 /40

RS5PX5>BDG
GDCAC7FG

RS5dP5E>B8
GCBEGEDA3GDCAC7F8 /40

RS5Sd5>BEC
GAEB7D993GAEB7E99

RS5dP5GE>B
GDCAC7873GDCAC788

RS5Sd5>BED
GAEB7D9A3GAEB7E9A

RS5dP5GE>D
GDBCDE8A3GDBCDE8C

RS5Sd5AFGA
GAEB7D993GAEB7E99

RS5h a5>BEE
GDCAC7F83GDF8CFGA

RS5Sd5AFGB
GAEB7D9A3GAEB7E9A

RS5h a5>BEF
GDCAC7F93GDF8CFGB

RS5Zd5>>GG
GCGGBGEE3GDAG8FEC

RS5dP59AGCA
GDBAC9G93GDBAC9GC

QVSgc_ZSe

ZOQSeeWOX; 881	8A78A	ZOQSeeWS t x OX; 881	8A78C
ZOQSeeWdt	8C78A 8A79A		

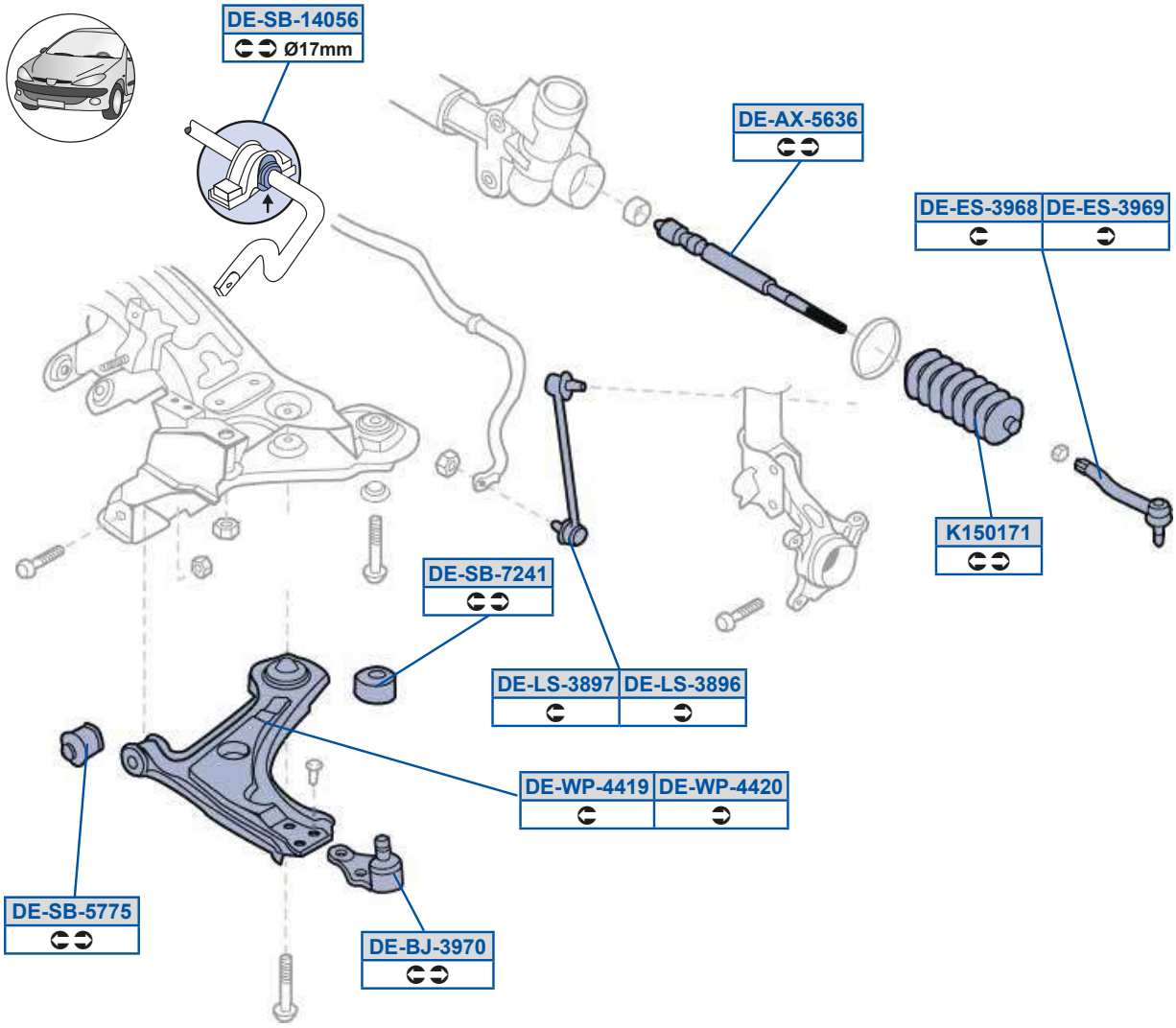

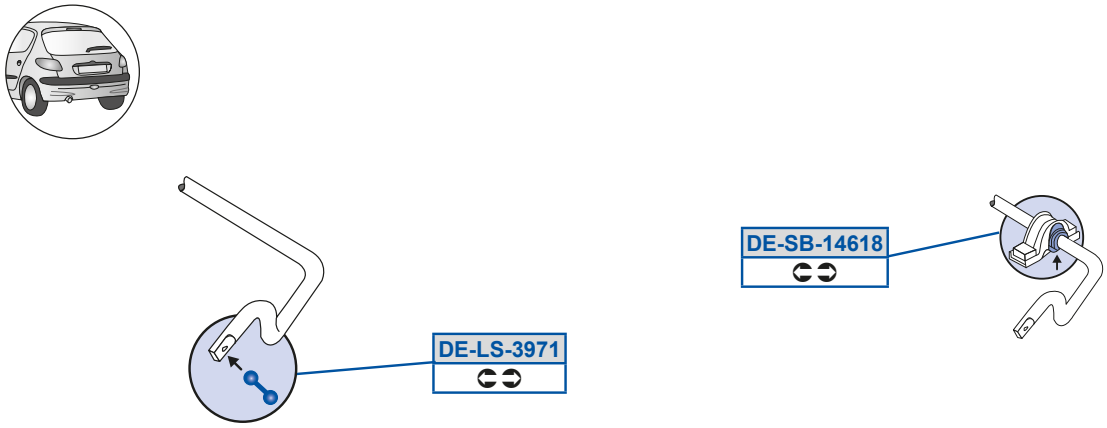

MOOG

RS5Oi 5CDAD
C97DE93C97FAF

RS5dP59BD9F
GDB7EECC3GDBABCBA

RS5PX5AGE8
GDBG798F

RS5dP5CEEC
GDAEFABD

RS5Sd5AGDF
GDB7EBFC

RS5dP5E>B9
GDAG8FCD

RS5Sd5AGDG
GDB7EBFD

RS5h a5BB9G
GDAG8FC73GDB8C7DA

RS5Zd5AFGD
GDB7A877

RS5h a5BB>8
GDAG8FC83GDB8C7DB

RS5Zd5AFGE
GDB7A7GG

Y9C89E9
C97EAF

RS5Zd5AGE9
GDCD8ECB

RS5dP59B8CD
GDBABCB73GDBEB7B7

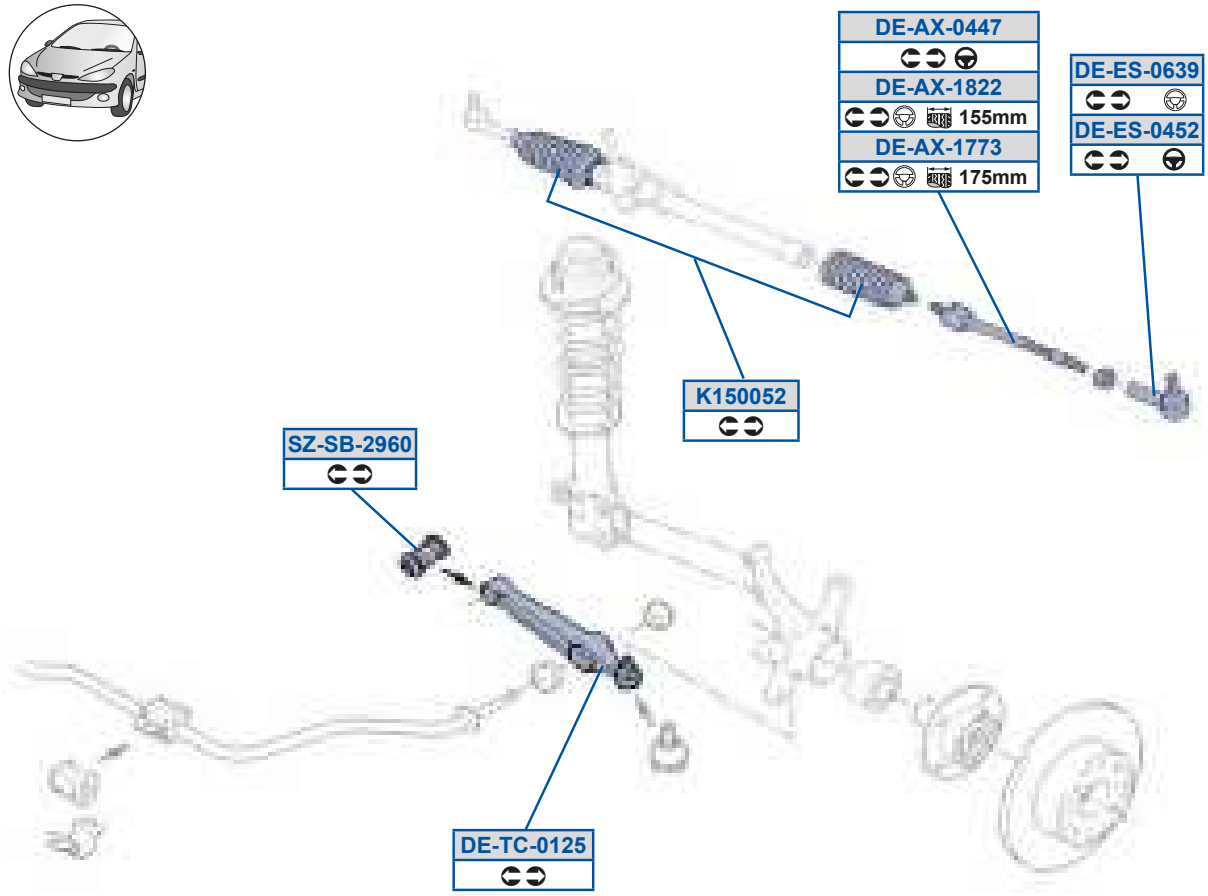
DE-AX-0447
DE-AX-1822
155mm
DE-AX-1773
175mm
DE-ES-0639
DE-ES-0452
K150052
SZ-SB-2960
DE-TC-0125

RS5Oi 58BBE
YPXnBC

RS5Oi 59EEA
C989CE

RS5Oi 59F>>
C989CC

RS5Sd58BC>
YPX79G

RS5Sd58DAG
BFF87OEFP777773C988AD

RS5eQ589>C
BC977OE7P773BC977OE7P777

Y9C88C>
YnoZ8F

dk5dP5>GD8
GDAF7CFD

QVSgc_ZSe

] f PWO S t x	8978C 9; 799	] f PWO dt	8978C 9; 799

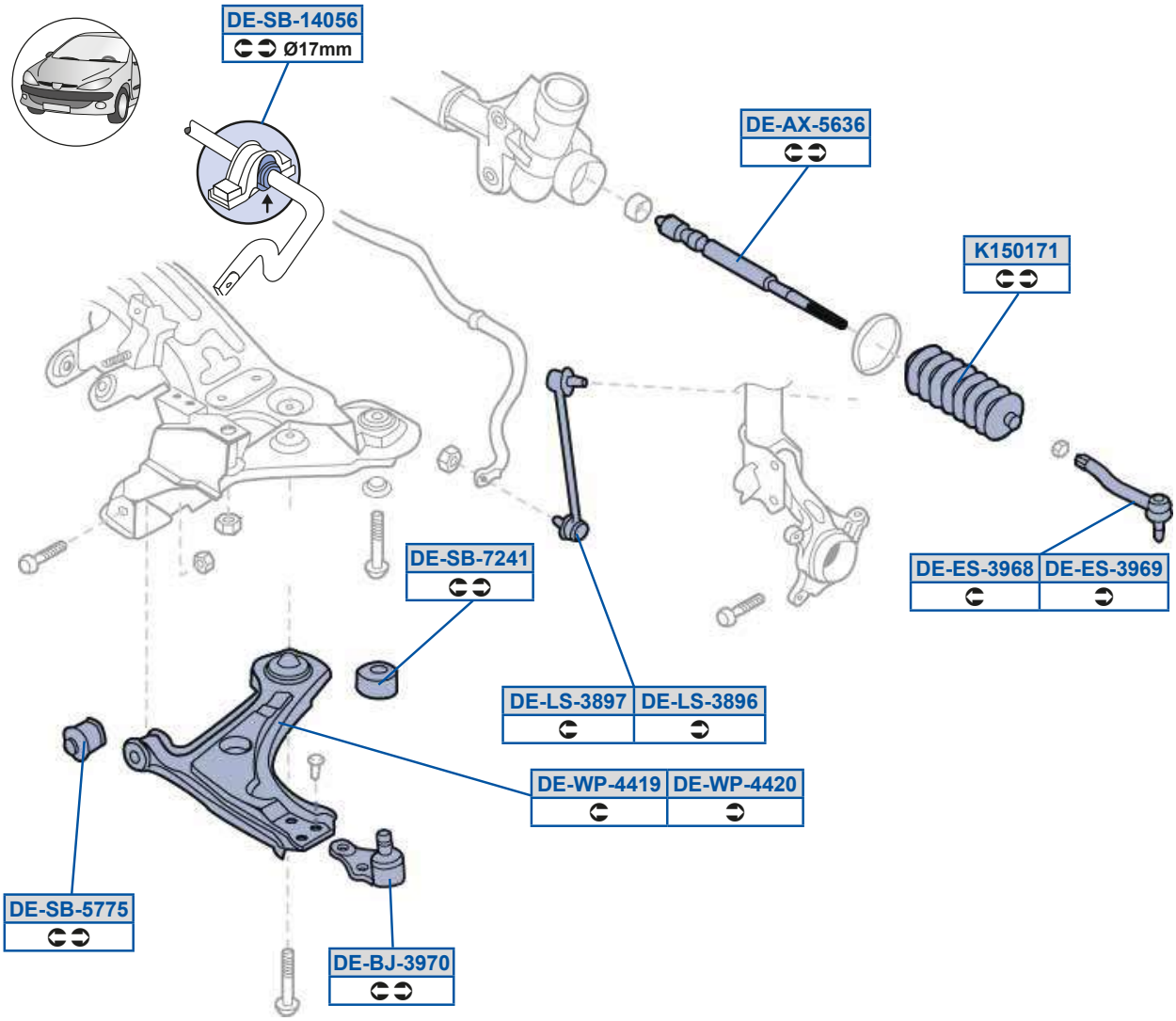

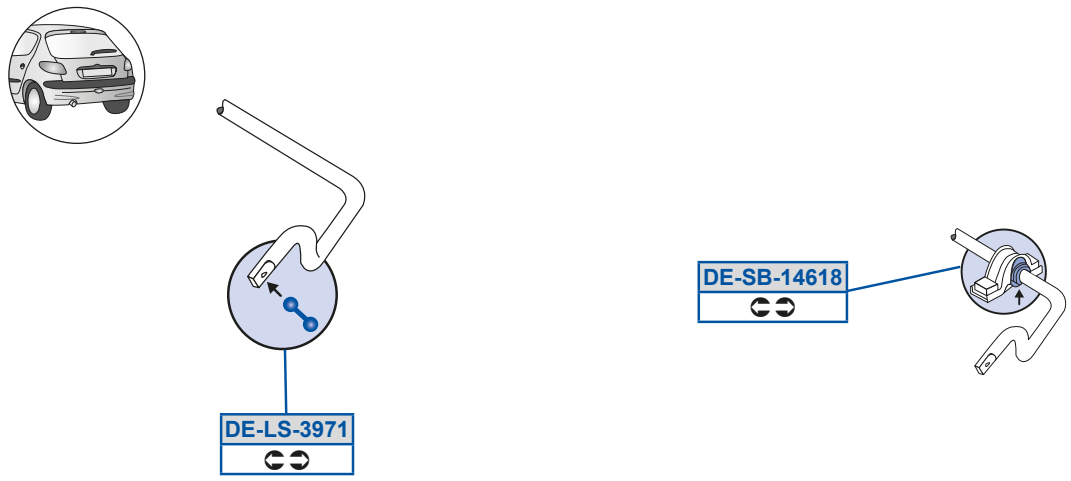

RS5Oi 5CDAD
C97DE93C97FAF

RS5dP59BD9F
GDB7EECC3GDBABCBA

RS5PX5AGE8
GDBG798F

RS5dP5CEEC
GDAEFABD

RS5Sd5AGDF
GDB7EBFC

RS5dP5E>B9
GDAG8FCD

RS5Sd5AGDG
GDB7EBFD

RS5h a5BB9G
GDAG8FC73GDB8C7DA

RS5Zd5AFGD
GDB7A877

RS5h a5BB>8
GDAG8FC83GDB8C7DB

RS5Zd5AFGE
GDB7A7GG

Y9C89E9
C97EAF

RS5Zd5AGE9
GDCD8ECB

RS5dP59B8CD
GDBABCB73GDBEB7B7

cZO] R 0KA8G1	9; 798		

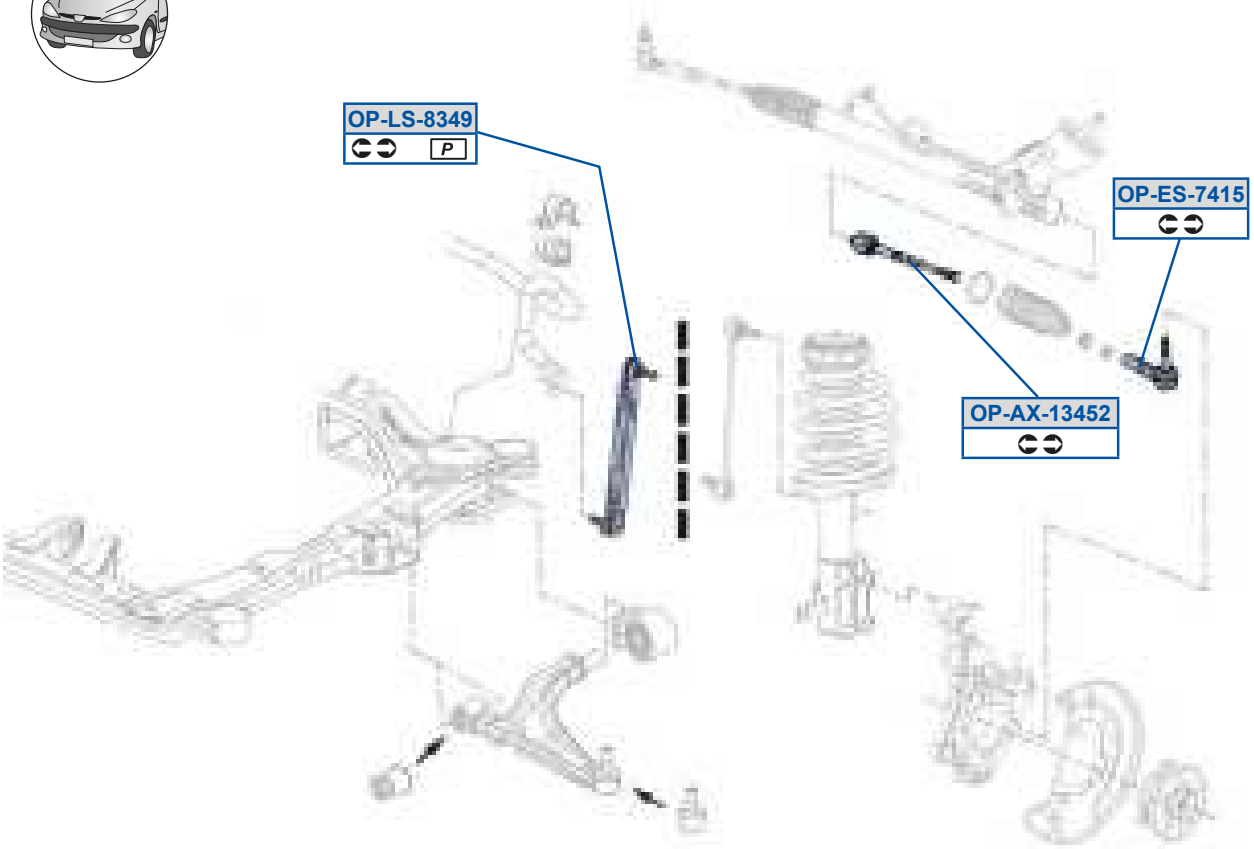

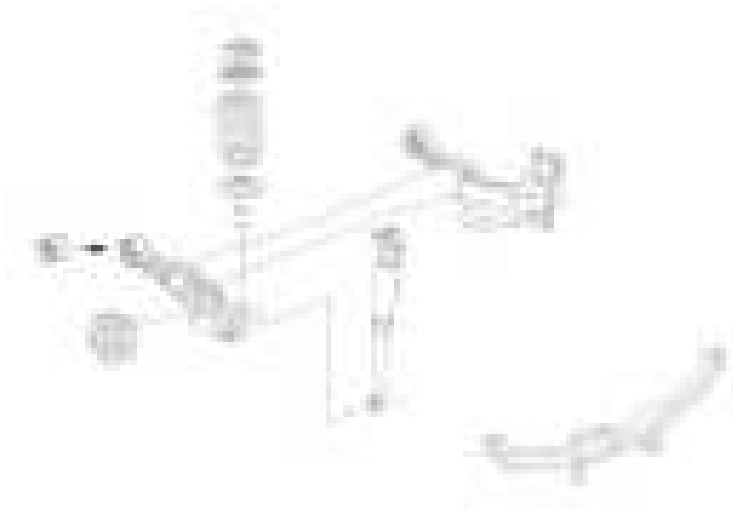

MOOG

_ a5Oi 59ABC>

8A9FDDFF38AAGFCGC

_ a5Sd5EB9C

8A9EFACG38A9FDDFD

_ a5Zd5FABG

8A98G8B83AC7D8E

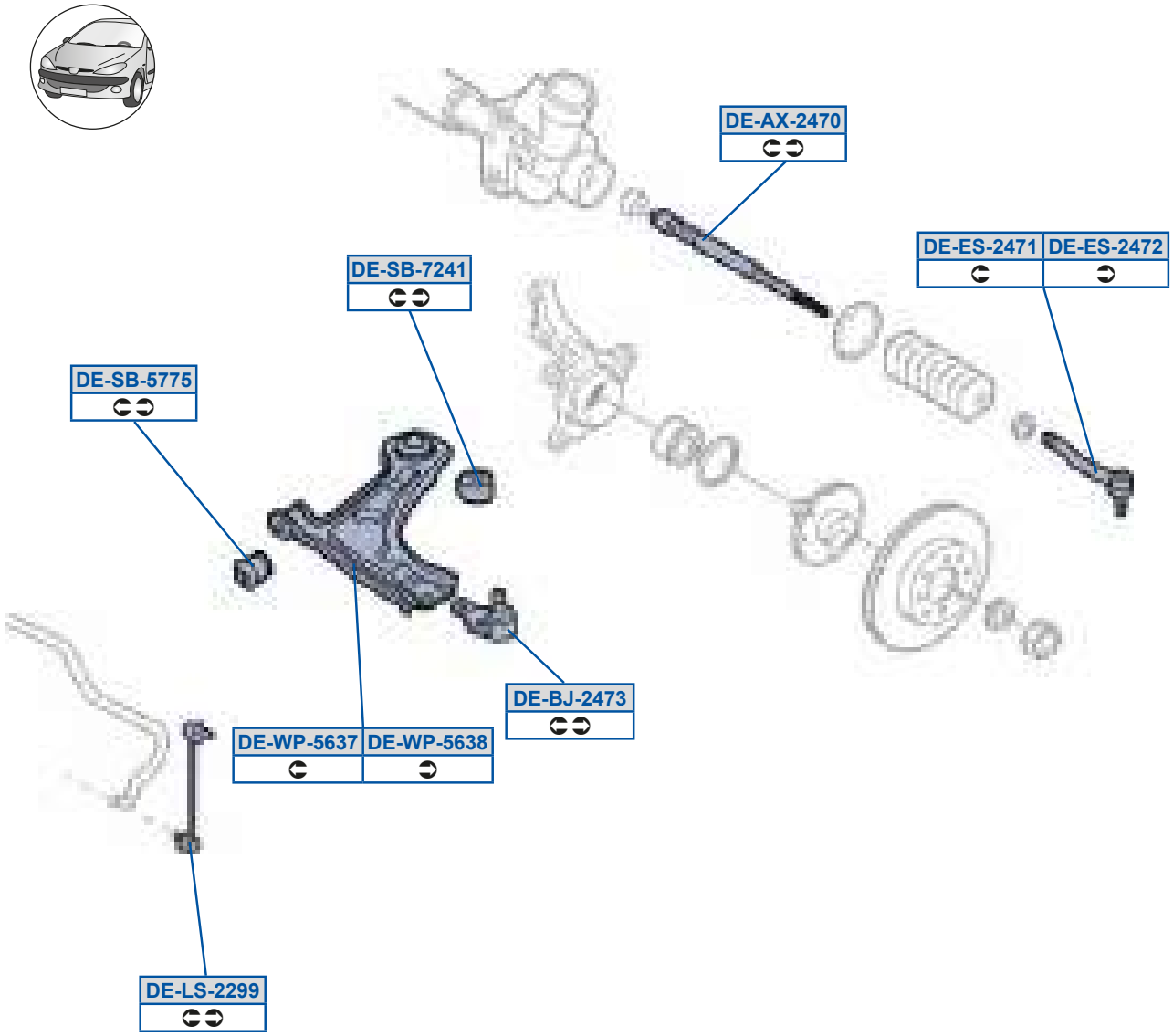
DE-AX-2470
DE-ES-2471
DE-ES-2472
DE-SB-7241
DE-SB-5775
DE-BJ-2473
DE-WP-5637
DE-WP-5638
DE-LS-2299

RS5Oi 5>BE8
C98CDB3GAEB7D98

RS5PX5>BEA
GD9D887F

RS5Sd5>BE9
GD9D8AEF

RS5Sd5>BE>
GD9D8AEG

RS5Zd5>>GG
GCGGBGEE3GDAG8FEC

RS5dP5CEEC
GDAEFABD

RS5dP5E>B9
GDAG8FCD

RS5h a5CDAE
GD9D87GG3GDAEFABE

RS5h a5CDAF
GD9D88773GDAEFABF

QVSgc_ZSe

daOcY0[A881	8A798		

d r Ë I[A88n

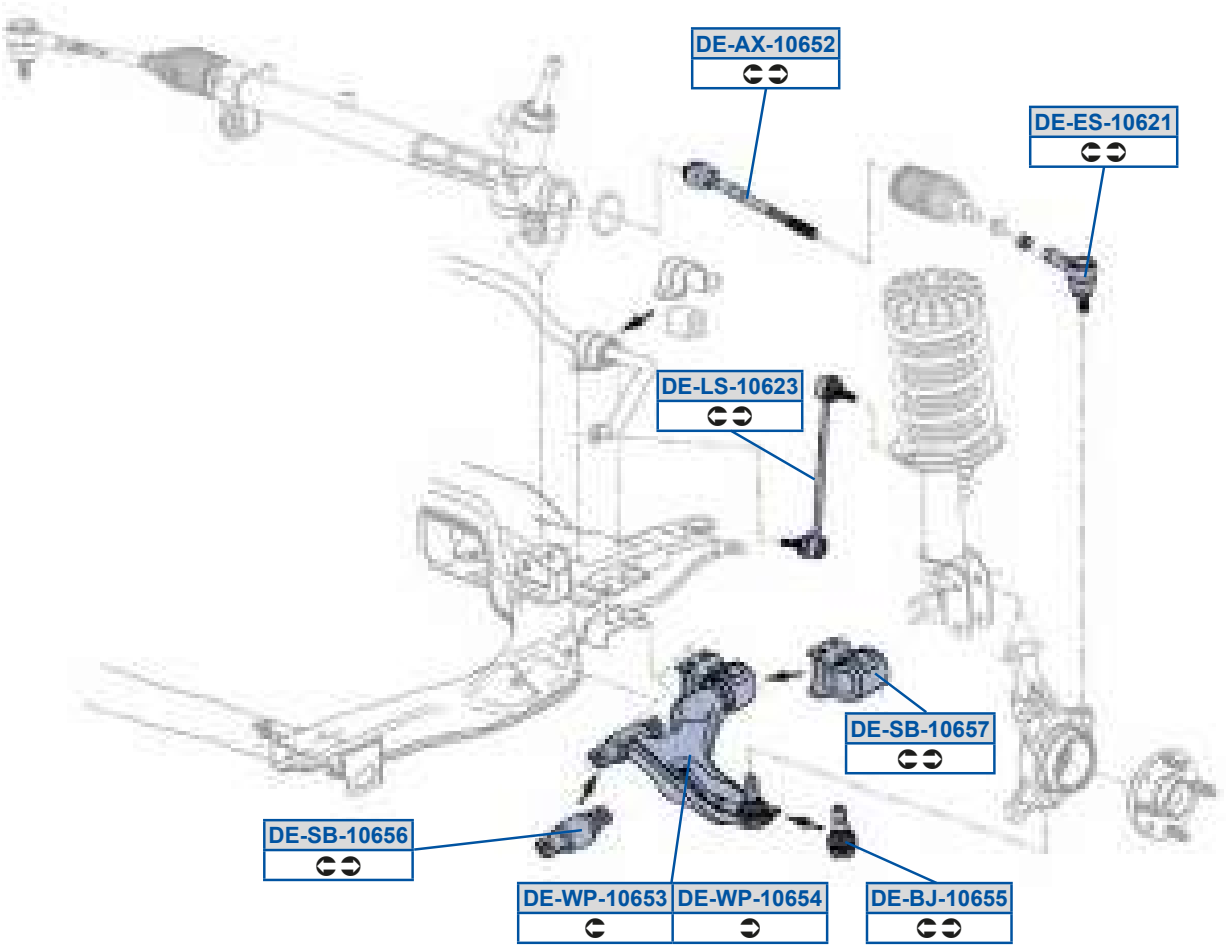

QVSgc_ZSe

MOOG

RS5Oi 598DC>
GCGDE9GB

RS5PX598DCC
GCGC9EF9 /408GCGC9EFA /40

RS5Sd598D>9
GCGDE9FC

RS5Zd598D>A
GCGBEF9G

RS5dP598DCD
GCGC9EF9 /408GCGC9EFA /40

RS5dP598DCE
GCGC9EF9 /408GCGC9EFA /40

RS5h a598DCA
GC7A9BB73GCGC9EF9

RS5h a598DCB
GC7A9BB83GCGC9EFA

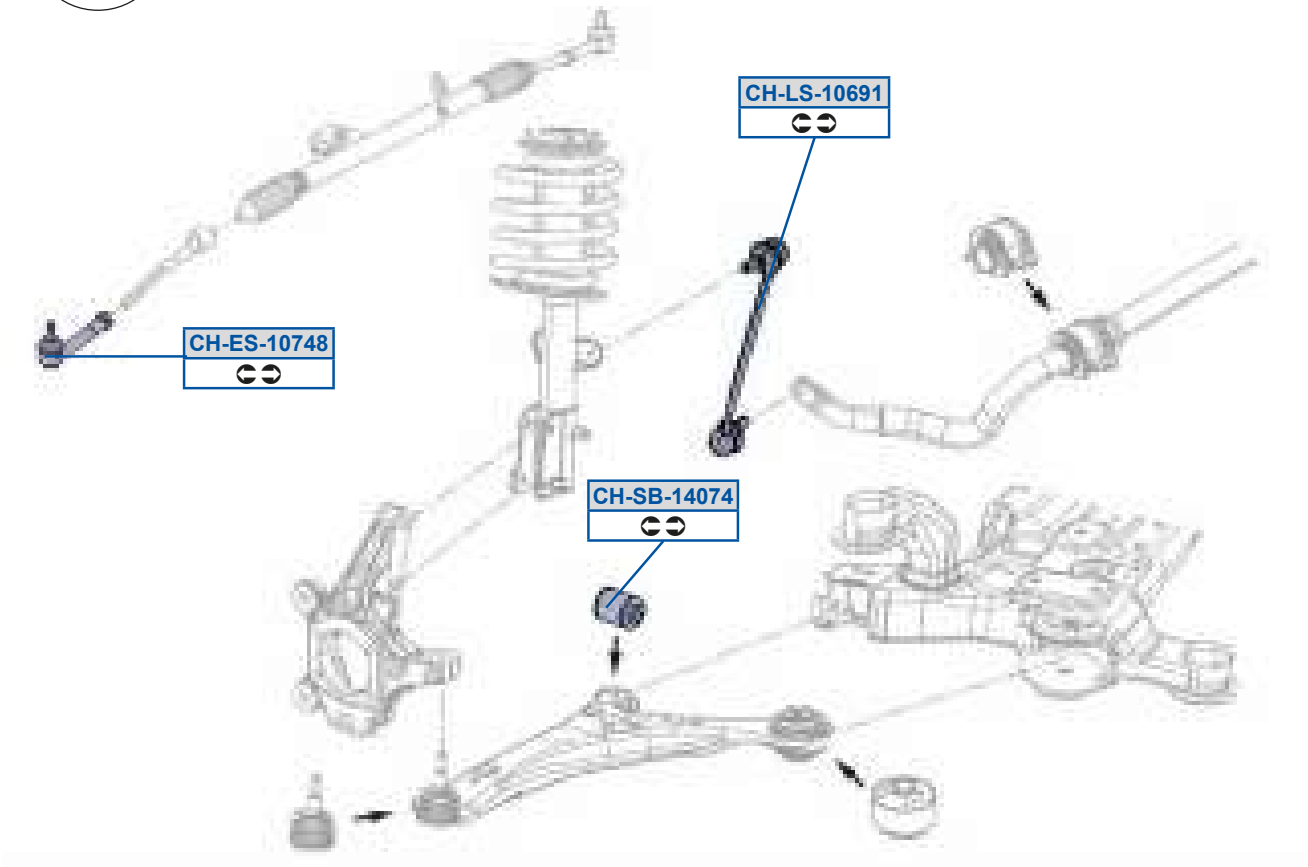
CH-LS-10691
CH-ES-10748
CH-SB-14074

QV5Sd598EBF
DF7AA8E8003DF7AA8E80P

QV5Zd598DG9
BDGBFCC3BEBA79800

QV5dP59B8EB
C9EAEA80P

QVcj dZSc
]S_] 0aZ1 | 8C7GB 8; 788

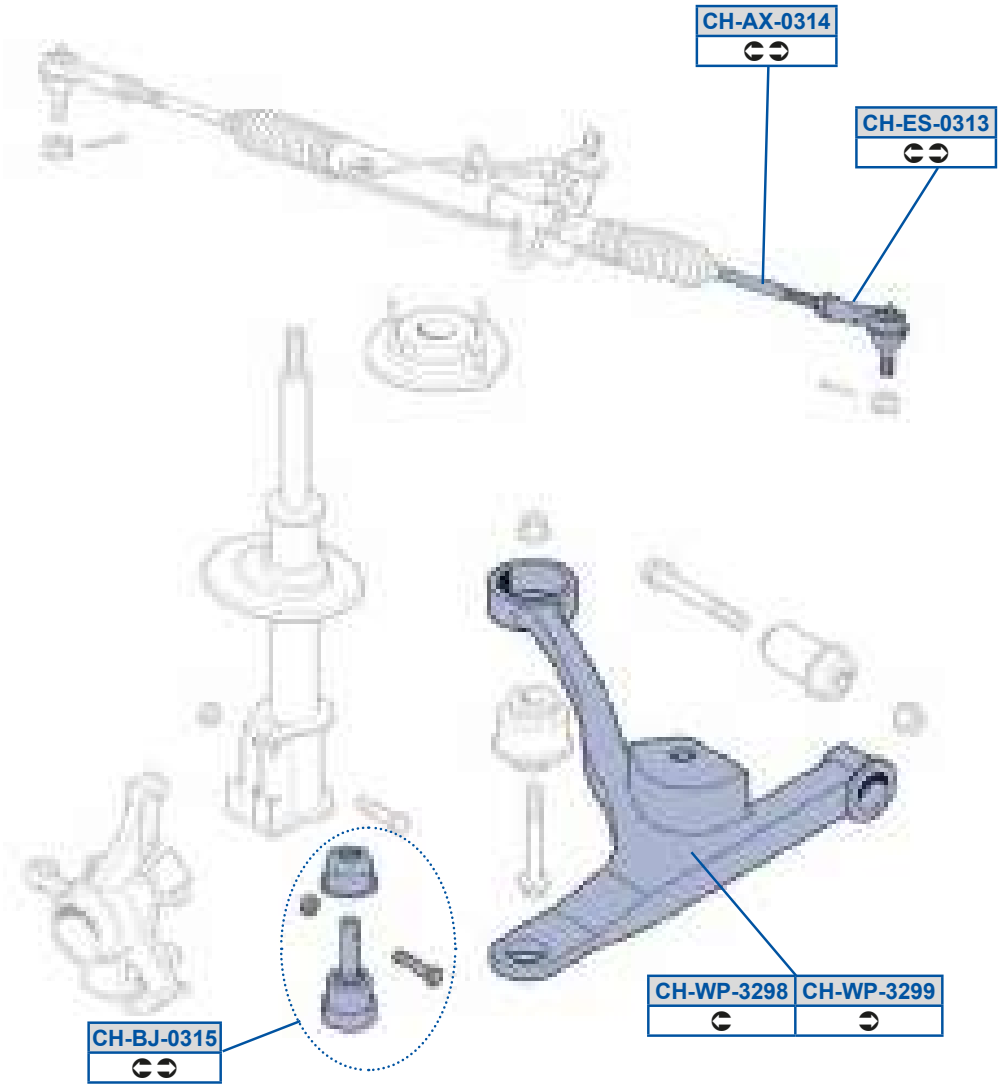

QV5Oi 58A9B
C97AEDBG

QV5PX58A9C
BBBGCCA

QV5Sd58A9A
BED9FD83BED9FD800

QV5h a5A>GF
BC7GEEC

QV5h a5A>GG
BC7GEEB

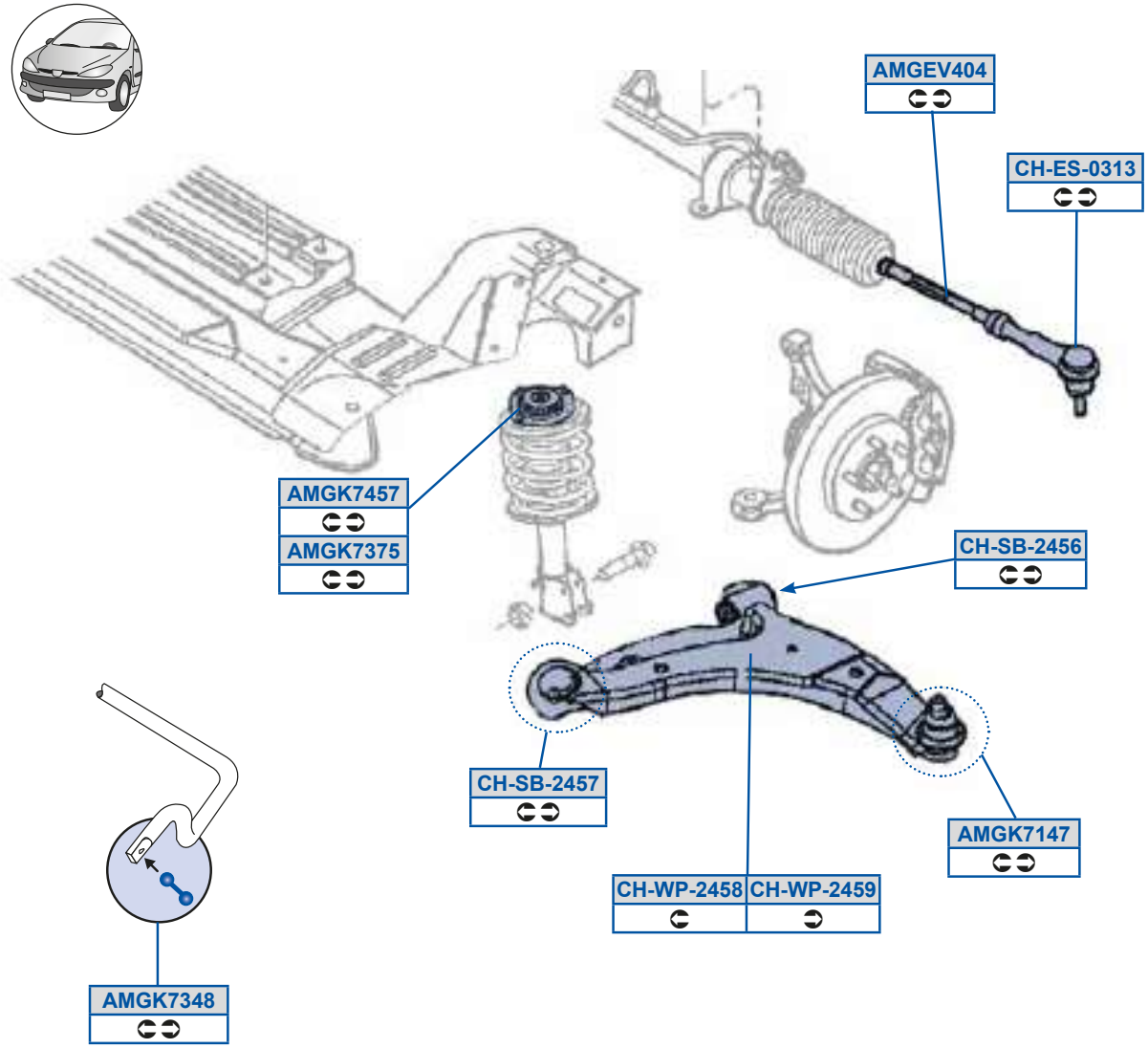
AMGEV404
CH-ES-0313
AMGK7457
AMGK7375
CH-SB-2456
CH-SB-2457
AMGK7147
CH-WP-2458
CH-WP-2459
AMGK7348

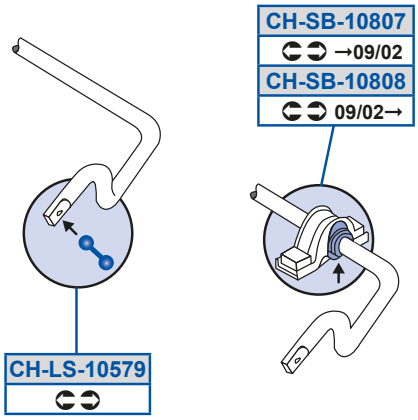
CH-SB-10807
→09/02
CH-SB-10808
09/02→
CH-LS-10579

MOOG

O[USgB8B
C9E9C770S

O[UYE9BE
BDCD7873BDCD7870R

O[UYEABF
C9E9A9B0P

O[UYEAEC
C9E999D

O[UYEBCE
C9E999D3C9E999E

QV5Sd58A9A
BED9FD83BED9FD800

QV5Zd598CEG
BDCDGAB0P

QV5dP598F8E
7BDCDGA9003BDCDGA900

QV5dP598F8F
7C9E9C9D00

QV5dP5>BCD
BDCD78A

QV5dP5>BCE
BDCD7890P3BDCD7890Q

QV5h a5>BCF
BDCDEA80V3BDCDEA80Z

QV5h a5>BCG
BDCDEA70R3BDCDEA70V

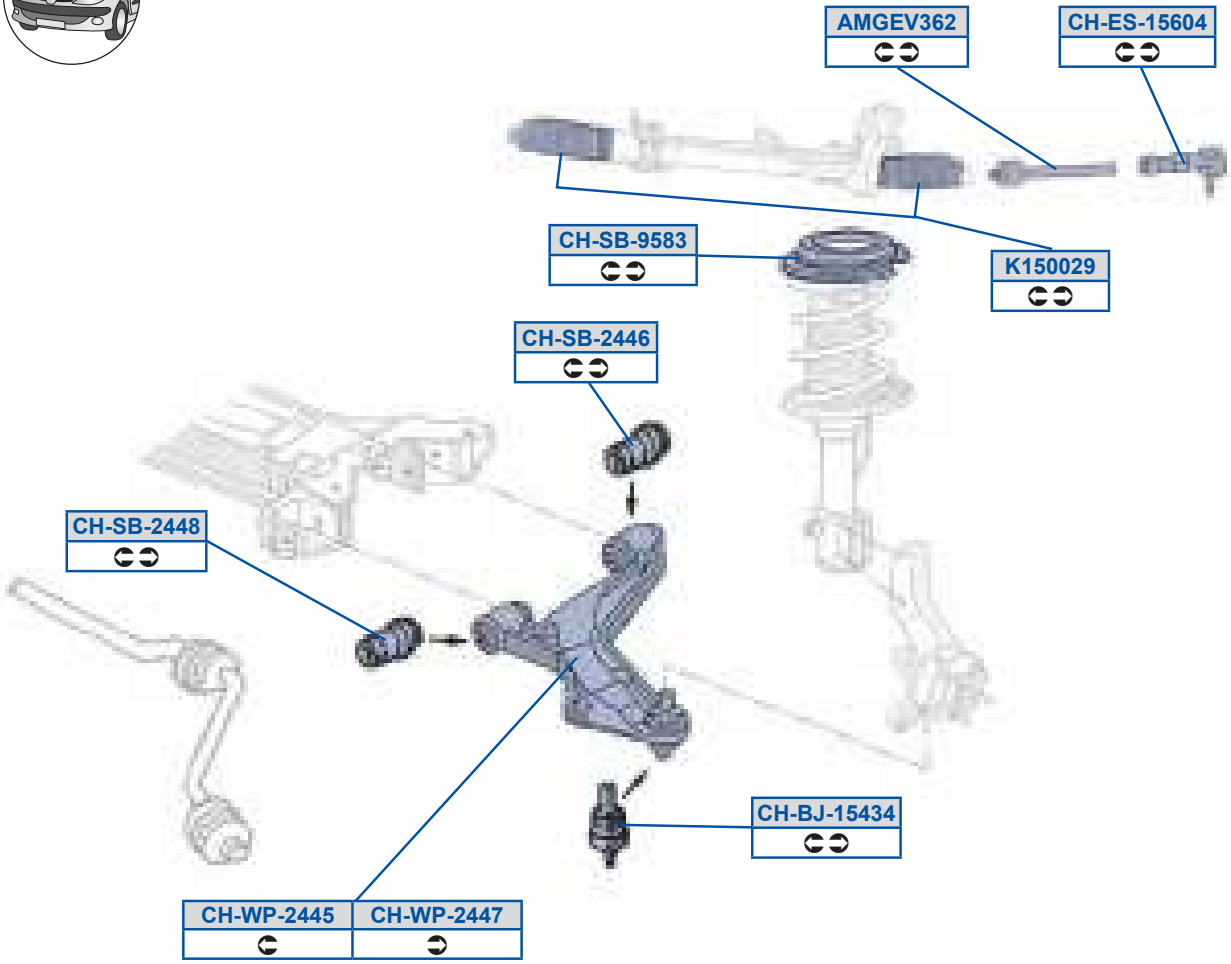
AMGEV362
CH-ES-15604
CH-SB-9583
K150029
CH-SB-2446
CH-SB-2448
CH-BJ-15434
CH-WP-2445
CH-WP-2447

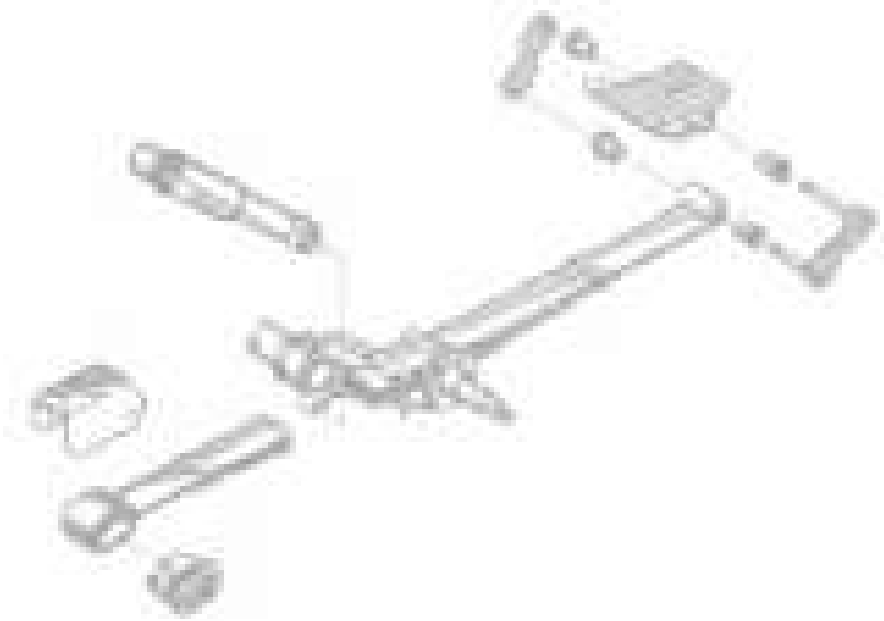

O[USgAD>
7BFEBFEOP

QV5PX59CBAB
BEBAAEDOO

QV5Sd59CD8B
BEGEE7D

QV5dP5>BBD
BDFBCBF

QV5dP5>BBF
C9E97FB

QV5dP5GCFA
BDFB89G3BDFBB8F

QV5h a5>BBC
BDGBED83BDGBED8Q

QV5h a5>BBE
7BDGBED7Q3BDGBED7

Y9C88>G
8ECB99FA8

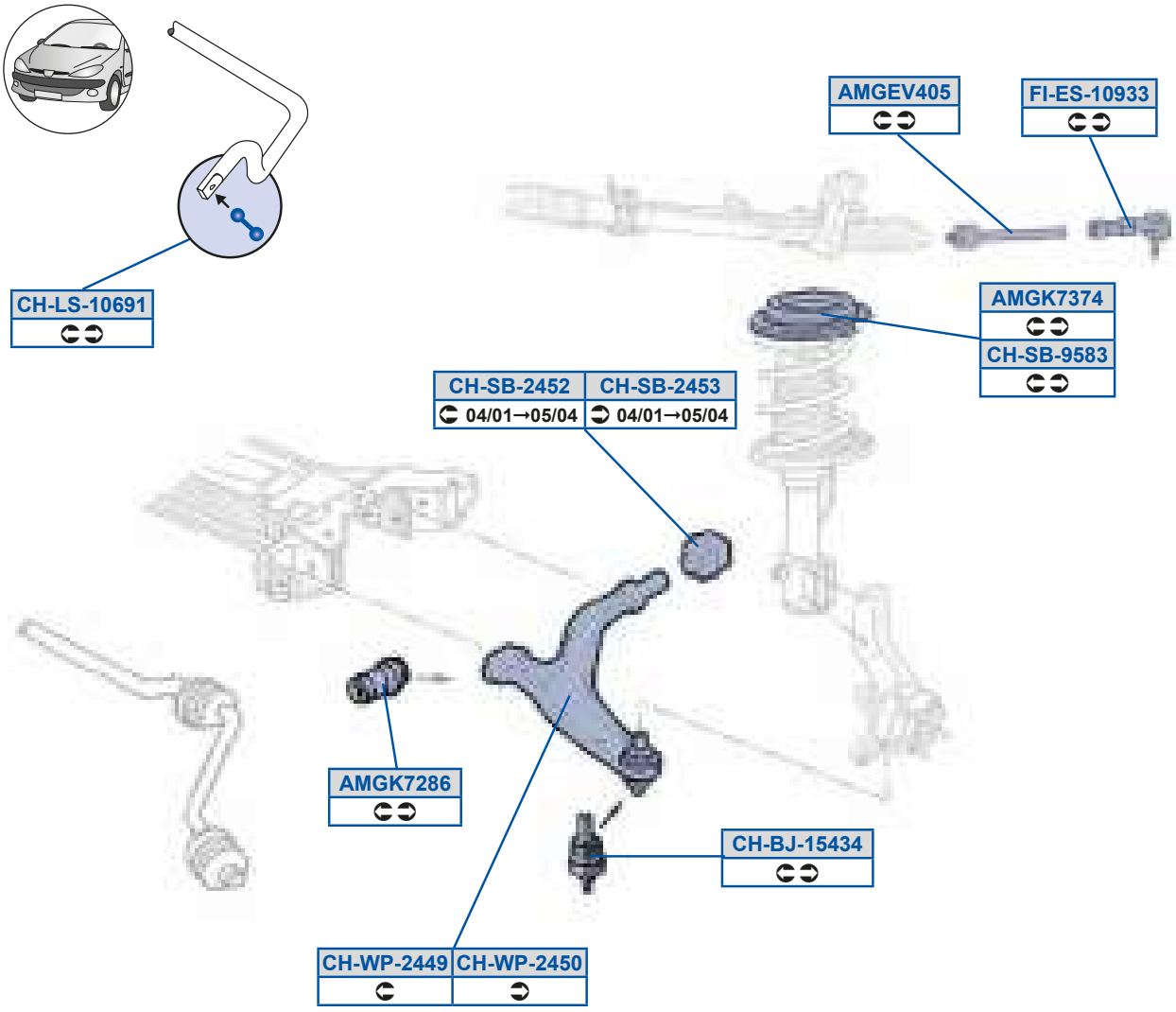
AMGEV405
FI-ES-10933
CH-LS-10691
AMGK7374
CH-SB-9583
CH-SB-2452
04/01→05/04
CH-SB-2453
04/01→05/04
AMGK7286
CH-BJ-15434
CH-WP-2449
CH-WP-2450

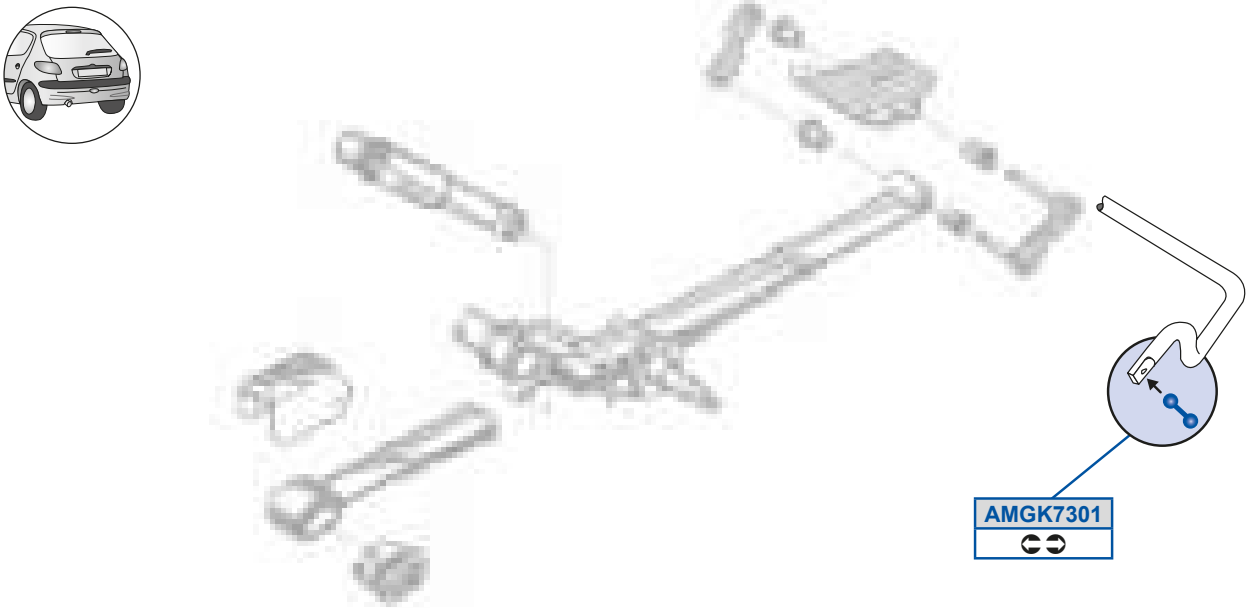
AMGK7301

O[USgB8C
BEBA8B90R

O[UYE>FD
BDFB897

O[UYEA89
C9E98G7

O[UYEAEB
BEBA77BB003BEDD88D00

QV5PX59CBAB
BEBAAED00

QV5Zd598DG9
BDGBFCC3BEBA79800

QV5dP5>BC>
BEBA7GC00

QV5dP5>BCA
BEBA7GB00

QV5dP5GCFA
BDFB89G3BDFBB8F

QV5h a5>BBG
BEDDCBA00

QV5h a5>BC8
BEDDCB900

TV5Sd598GAA
7C8FAED80R3C8FAED80P

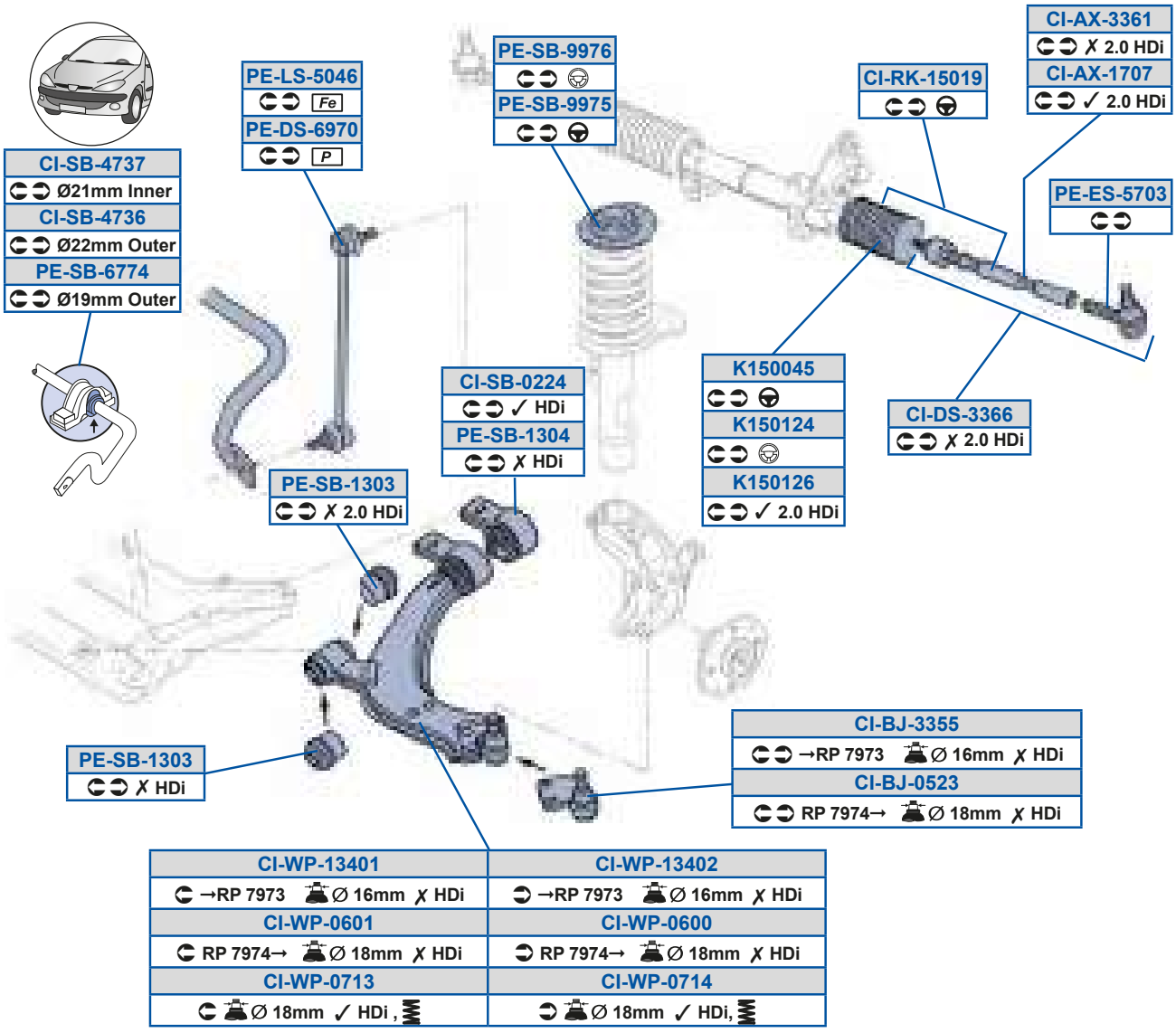

CI-SB-7974

PE-SB-8840

MOOG

QV5Oi 59E8E
AF8977773AF89QD

QV5dP5BEAE
C7GBDC

Y9C88BC
G8C87FDB3G8C87G9A

aS5dP5DEEB
C7GBDD

QV5Oi 5AAD9
AF89Q73FC7BF98B

QV5dP5EGEB
C8C9D9

Y9C89>B
B7DDBA3B7DDBB

aS5dP5FFB8
C8A8BE

QV5PX58C>A
ADB7C73ADB7C8

QV5h a58D88
AC98773AC98SB

Y9C89>D
B7DD8D3B7DD99

aS5dP5GGEC
C7AC9A3C7AC9E

QV5PX5AACC
ADB7AF3ADB7AG

QV5h a58D89
AC97VB3AC97VC

aS5Rd5DGE8
C7FEAF3C7FEB9

aS5dP5GGED
C7AC9A3C7AF99

QV5Rd5AADD
AF89Q73GBE8777GDC

QV5h a58E9A
AC97VG3AC97XA

aS5Sd5CE8A
AF8E7G/403AF8E87/40

QV5c Y59C89G
AF89Q73FC7BF98B

QV5h a58E9B
AC98SG3AC98TA

aS5Zd5C8BD
C7FEAB3C7FEAG

QV5dP58>>B
AC9AFA

QV5h a59AB89
AC97O83AC97O9

aS5dP59A8A
GD887BFA

QV5dP5BEAD
C7GBEE

QV5h a59AB8>
AC98E83AC98E9

aS5dP59A8B
AC9AD93AC9AEC

QWc_]

PScZWU_	8B78F	PScZWU_ 0PG1	8B78F
PScZWU_ P	8B78F	PScZWU_ P 0PG1	8E798
PScZWU_ a t y 7QÉt é	8B78F		

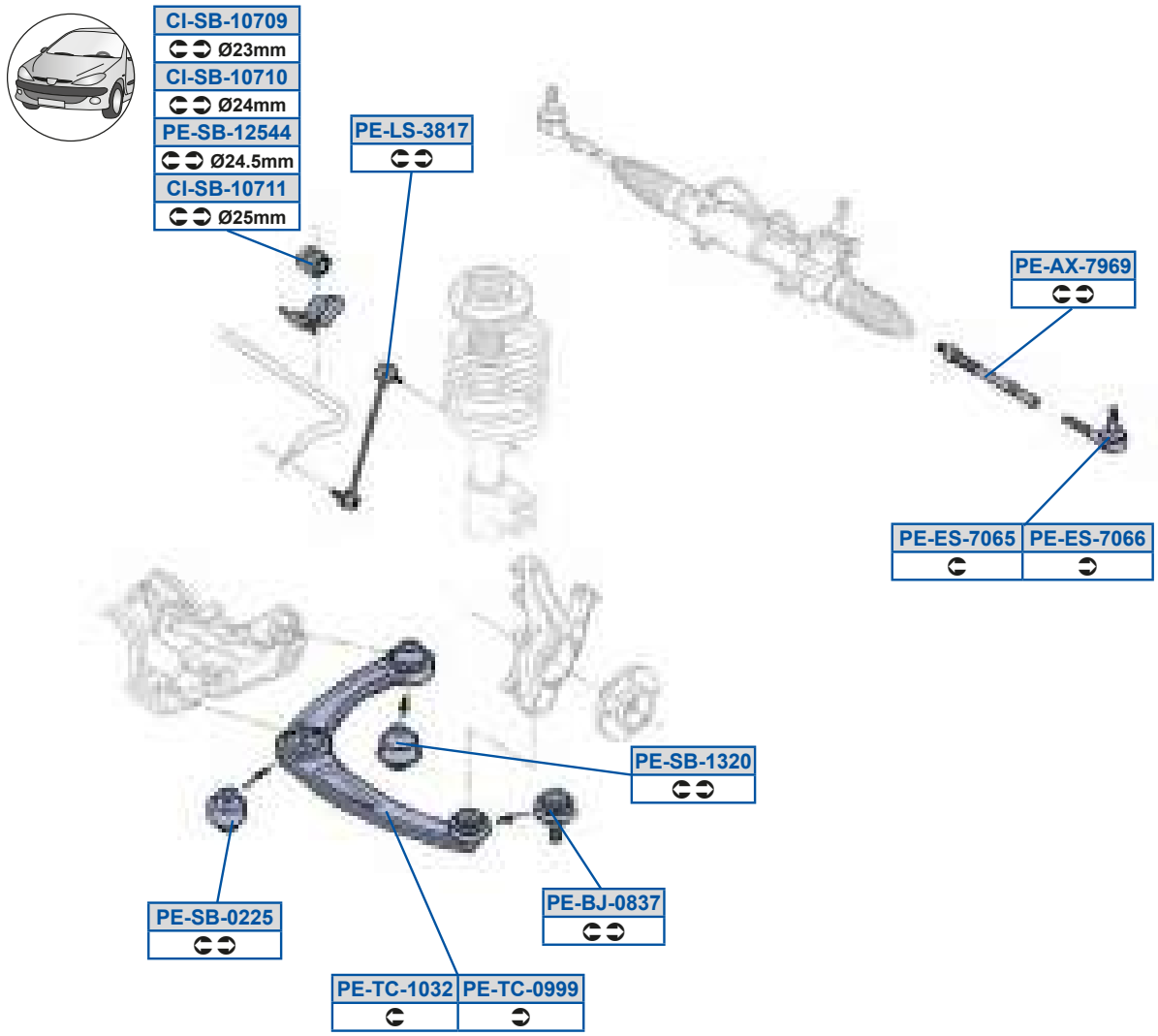

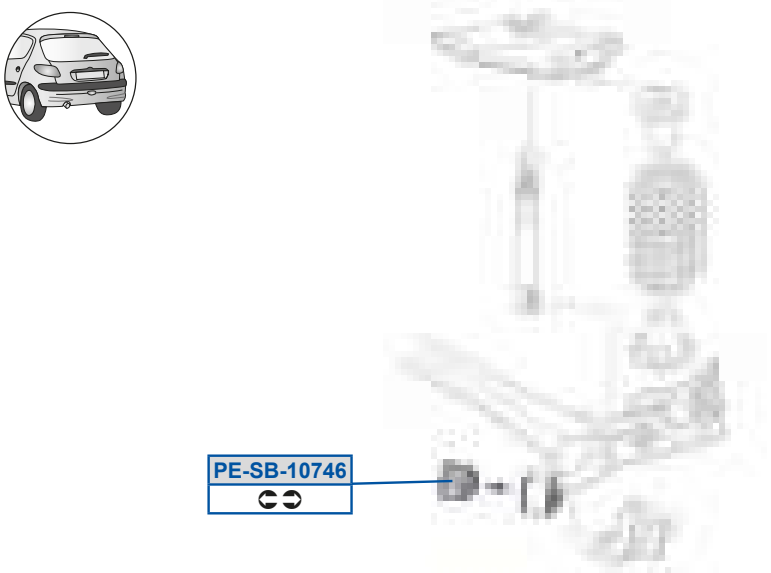

QW5dP598E8G
C7GBSA

aS5dP58>>C
AC9AG8

QW5dP598E98
C7GBSB

aS5dP598EBD
C8A8V8

QW5dP598E99
C7GBSE

aS5dP59>CBB
C7GBSD

aS5Oi 5EGDG
AF89TB

aS5dP59A>8
AC9AEE3AC9AG9

aS5PX58FAE
ADB7CA3ADB7D7

aS5eQ58GGG
AC98YA3AC98i A

aS5Sd5E8DC
AF8EED3AF8EFG

aS5eQ598A>
AC97YF3AC97i A

aS5Sd5E8DD
AF8EEC3AF8EFF

aS5Zd5AF9E
C7FEC73C7FECE

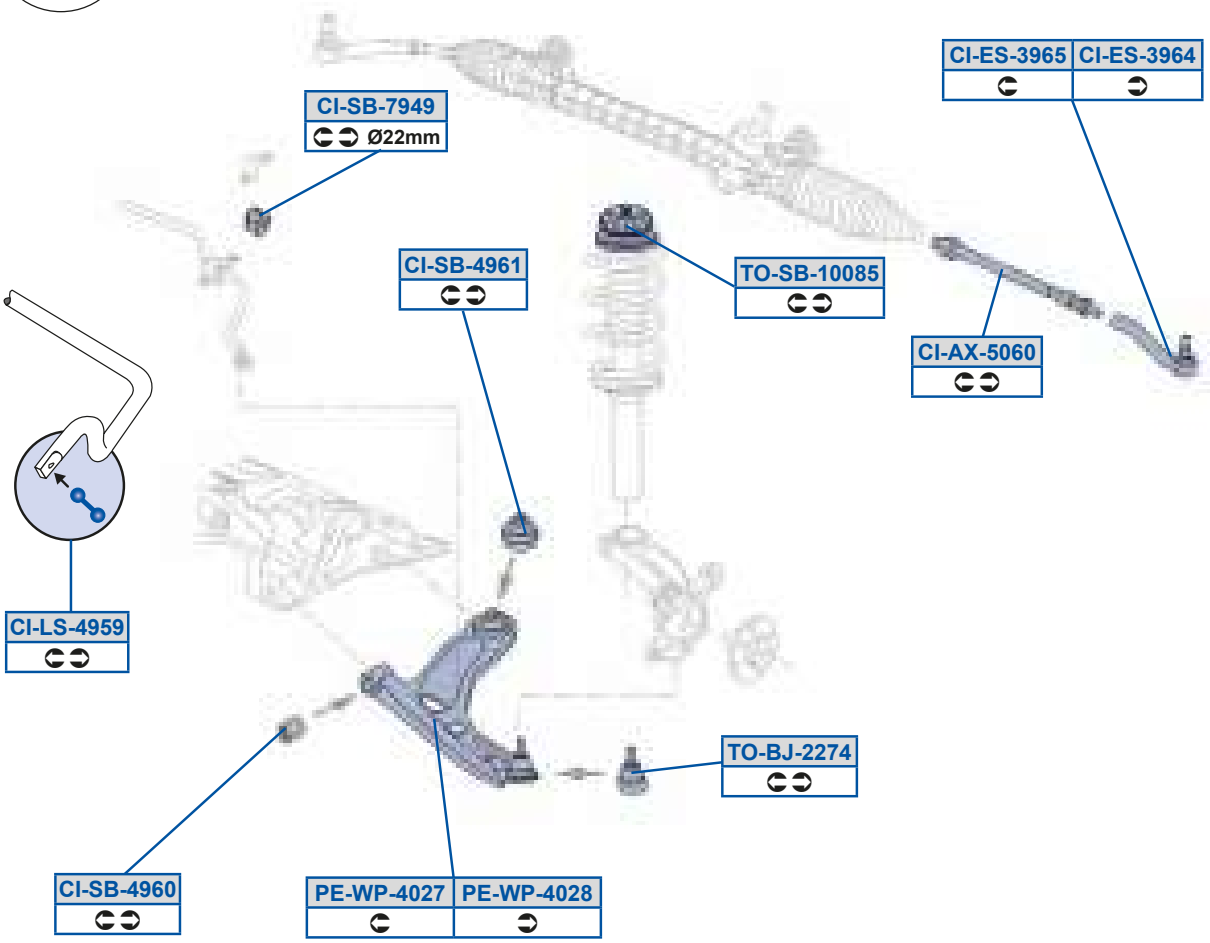
CI-SB-7949
Ø22mm
CI-ES-3965
CI-ES-3964
CI-SB-4961
TO-SB-10085
CI-AX-5060
CI-LS-4959
TO-BJ-2274
CI-SB-4960
PE-WP-4027
PE-WP-4028

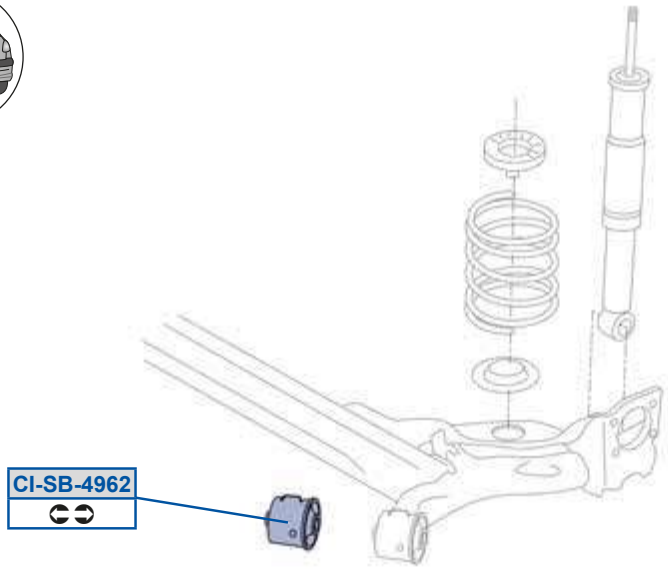
CI-SB-4962

MOOG

QV5Oi 5C8D8
B778AA

aS5h a5B8>E
AC97I 9

QV5Sd5AGDB
AF8EDB

aS5h a5B8>F
AC98ZA

QV5Sd5AGDC
AF8EDA

e_5PX5>>EB
BAA7FCG7AC3BF7DFCG7AC /40

QV5Zd5BGCG
C7G887

e_5dP5988FC
C7ACCE

QV5dP5BGD8
AC97I 9 /40 3AC98ZA /40

QV5dP5BGD9
AC97I 9 /40 3AC98ZA /40

QV5dP5BGD>
C8A8 QG

QV5dP5EGBG
C7GBOF

QWc_]

Q; OK[r1	8G78A	Q; S] eScacWS	8B78G
QA WOTQr1	8; 78;	QA a ék OVPr1	8C78A

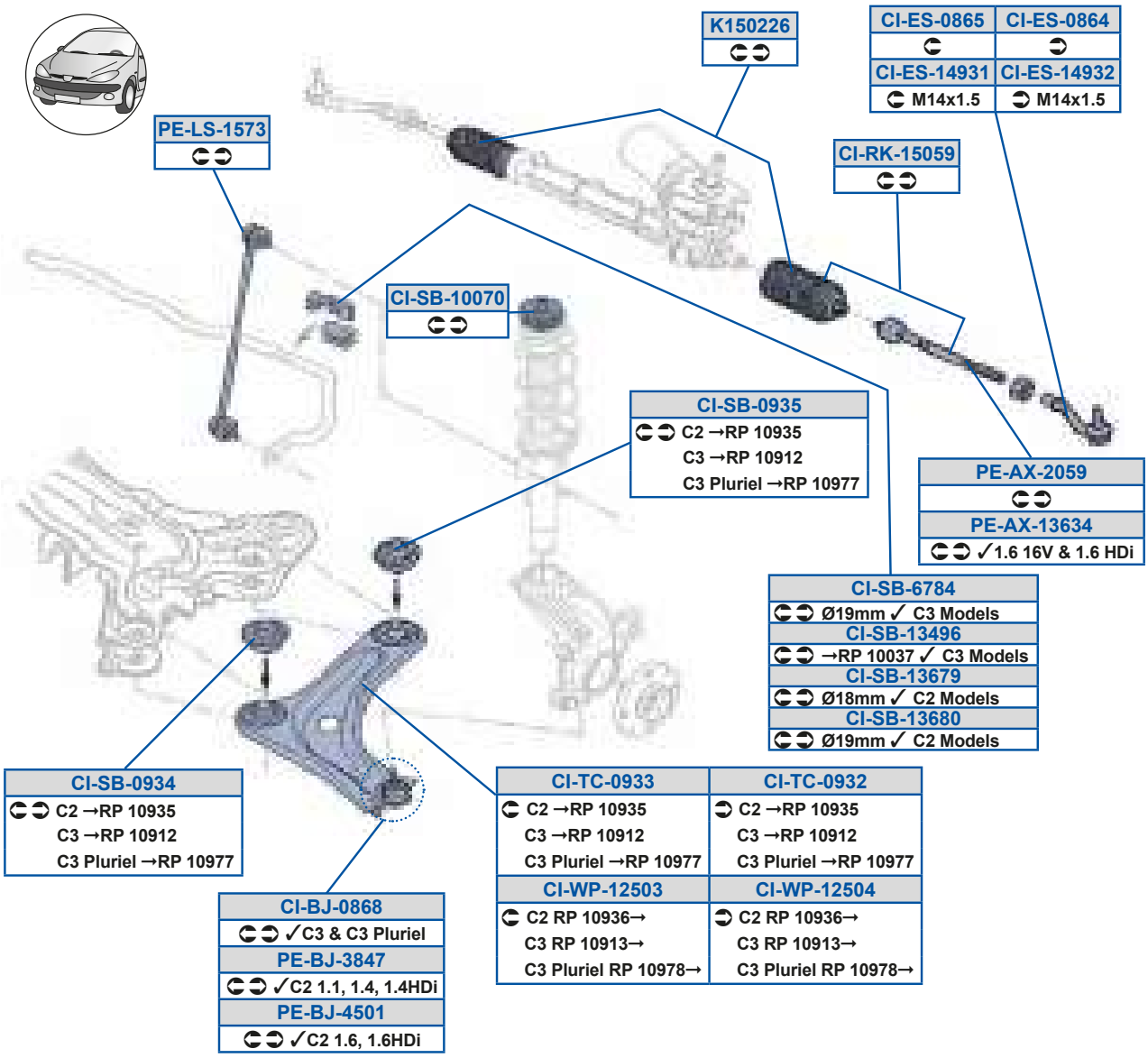

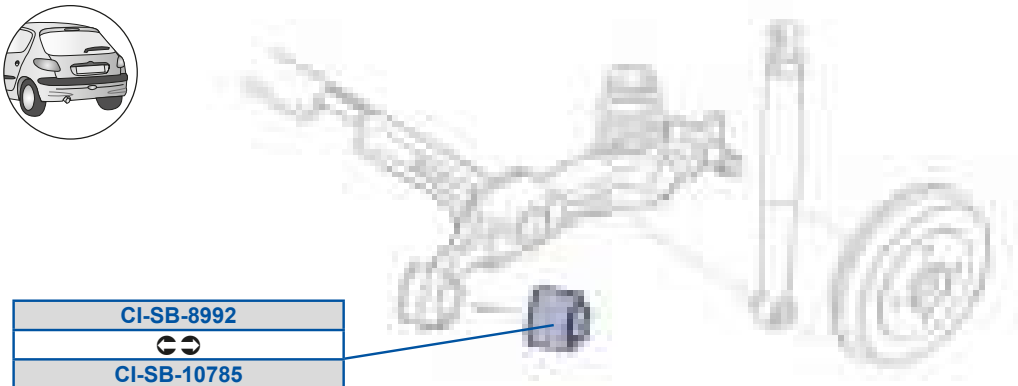

MOOG

QW5PX58FDF
ADB7CD3ADB7D8

QW5dP5988E8
C7A8F7

QW5eQ58GAA
AC97ZA3AC97ZB

aS5Zd59CEA
C7FEBC3C7FECG

QW5Sd58FDB
AF8ECD

QW5dP598EFC
C8A8QD

QW5h a59>C8A
AC97ZB3AC97ZG

QW5Sd58FDC
AF8ECC

QW5dP59ABGD
C7GBGD

QW5h a59>C8B
AC98I A

QW5Sd59BGA9
AF8ED9

QW5dP59ADEG
C7GBOG

Y9C8>>D
B7DDDG

QW5Sd59BGA>
AF8ED8

QW5dP59ADF8
C7GBOD

aS5Oi 59ADAB
AF89SD

QW5cY59C8CG
AF89S8

QW5dP5DEFB
C7GBG8

aS5Oi 5>8CG
AF89S8

QW5dP58GAB
AC9AGF

QW5dP5FGG>
C8A8Q8

aS5PX5AFBE
ADB7CD3ADB7D8

QW5dP58GAC
AC9AGG3AC9AOO

QW5eQ58GA>
AC98VC3AC98VD

aS5PX5BC89
ADB7CG3ADB7DD

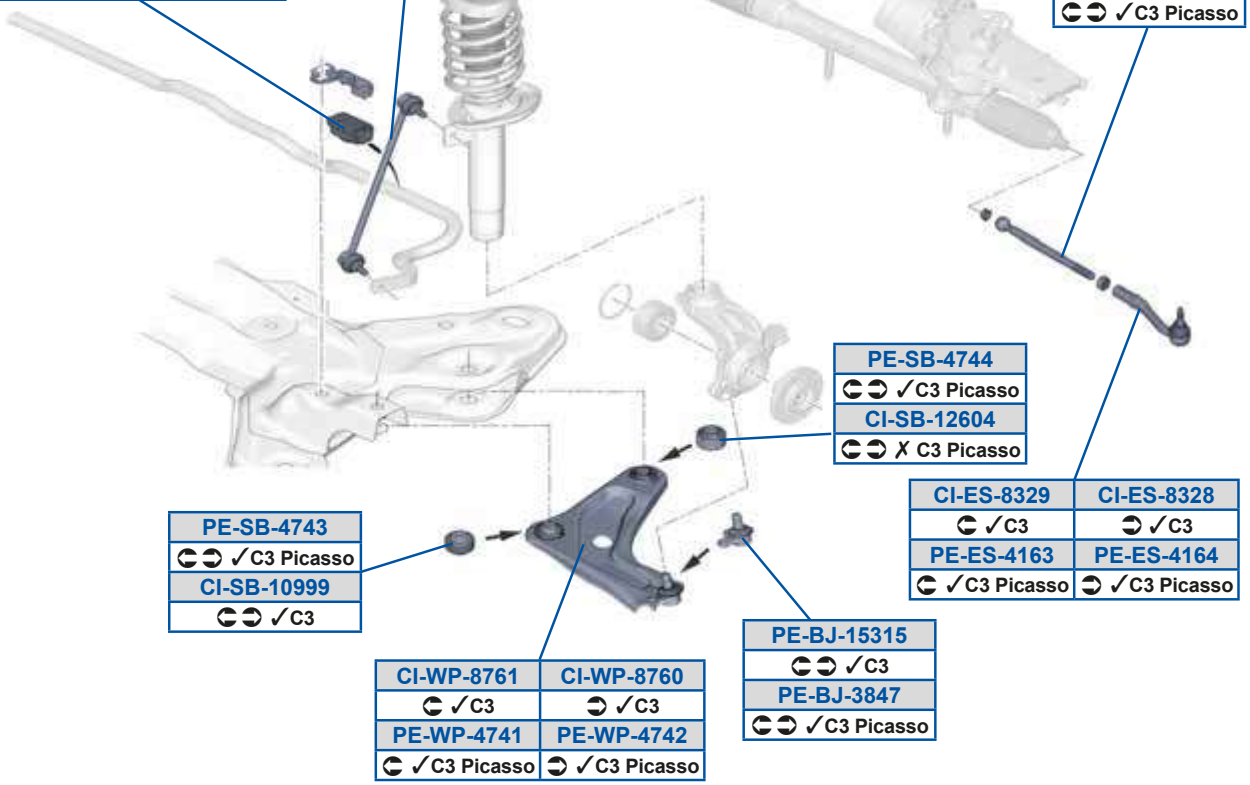
PE-LS-1573
✓C3
PE-LS-3990
✓C3 Picasso
PE-LS-3989
✓C3 Picasso
CI-SB-14915
Ø20mm ✓C3
CI-SB-14916
Ø21.5mm ✓C3
PE-SB-12590
Ø23mm ✓C3 Picasso
CI-AX-8851
✓C3
PE-AX-4740
✓C3 Picasso
PE-SB-4744
✓C3 Picasso
CI-SB-12604
✗ C3 Picasso
CI-ES-8329
✓C3
CI-ES-8328
✓C3
PE-ES-4163
✓C3 Picasso
PE-ES-4164
✓C3 Picasso
PE-SB-4743
✓C3 Picasso
CI-SB-10999
✓C3
PE-BJ-15315
✓C3
PE-BJ-3847
✓C3 Picasso
CI-WP-8761
✓C3
CI-WP-8760
✓C3
PE-WP-4741
✓C3 Picasso
PE-WP-4742
✓C3 Picasso

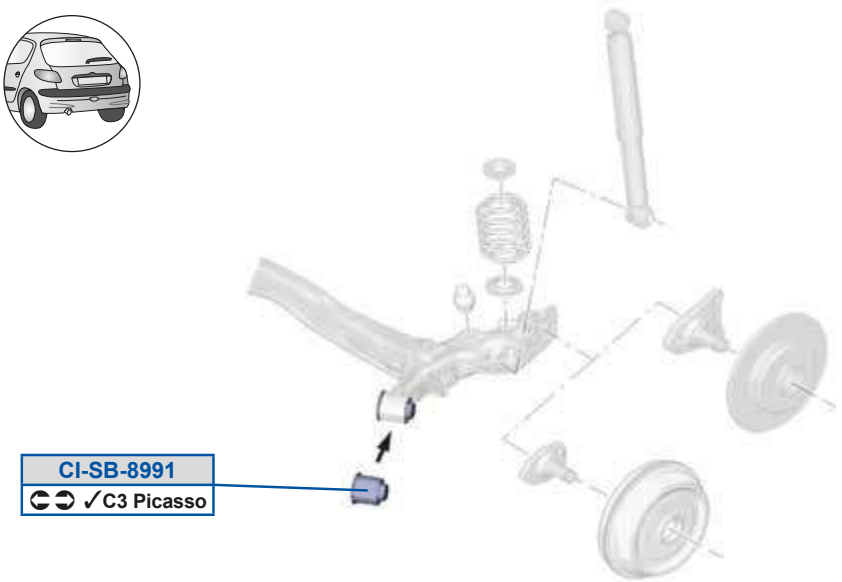
CI-SB-8991
✓C3 Picasso

QV5Oi 5FFC9
AF89TD

QV5h a5FED8
AC98oG

aS5Zd5AGFG
C7FEDF

QV5Sd5FA>F
AF8EG8

QV5h a5FED9
AC97 E

aS5Zd5AGG8
C7FEDG

QV5Sd5FA>G
AF8EG9

aS5Oi 5BEB8
AF89SF

aS5dP59>CG8
C7GBQC

QV5dP598GGG
AC9AQ 3AC9ASO

aS5PX59CA9C
ADB7EF

aS5dP5BEBA
AC9AQS

QV5dP59>D8B
AC9ASQ3AC9ASS

aS5PX5AFBE
ADB7CD3ADB7D8

aS5dP5BEBB
AC9AQQ

QV5dP59BG9C
C7F8i A

aS5Sd5B9DA
AF8EDE

aS5h a5BEB9
AC97nE3AC97 C

QV5dP59BG9D
GDEBEDAF7

aS5Sd5B9DB
AF8EDF

aS5h a5BEB>
AC98dF3AC98oF

QV5dP5FGG9
C8A8SG3C8A8T7

aS5Zd59CEA
C7FEBC3C7FECG

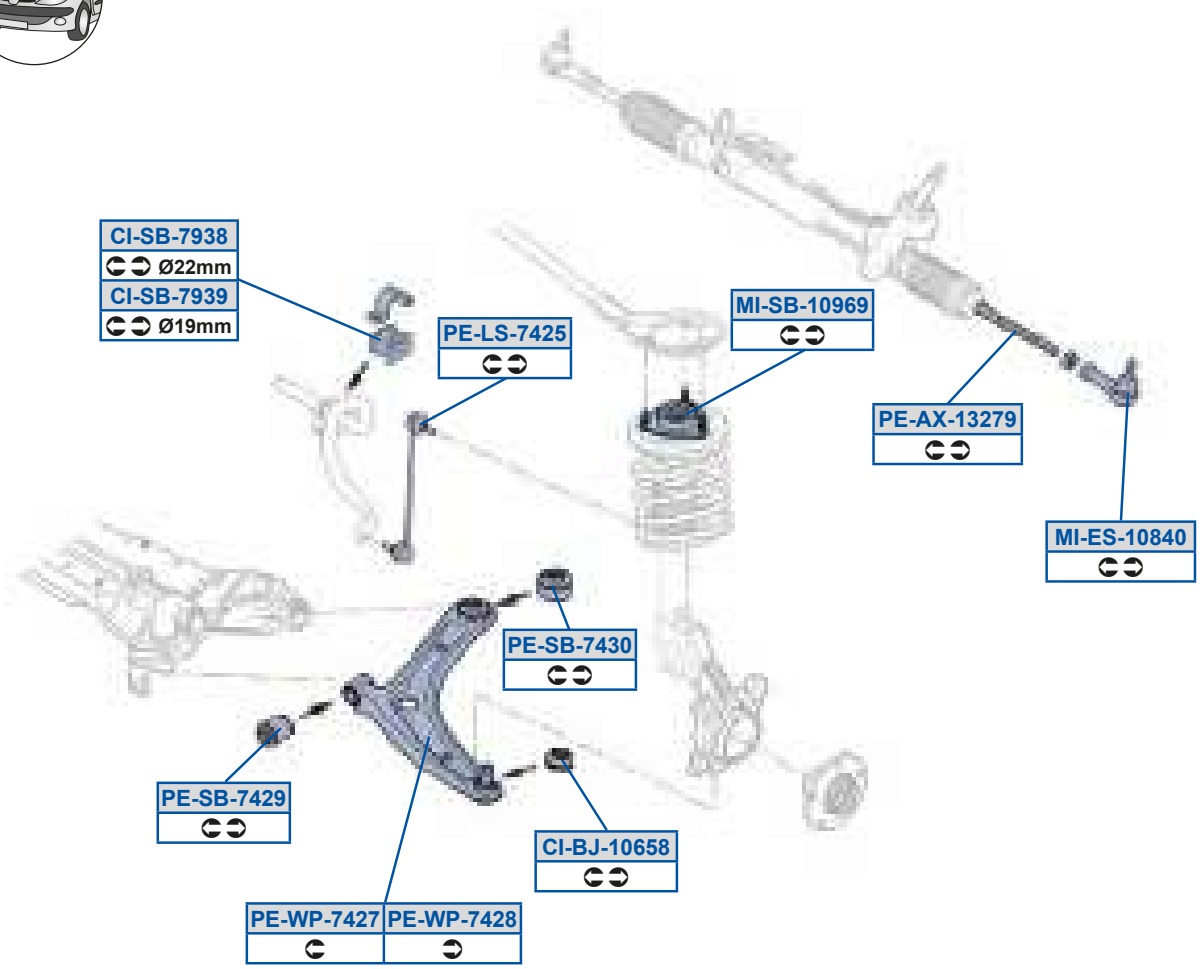
CI-SB-7938
Ø22mm
CI-SB-7939
Ø19mm
PE-LS-7425
MI-SB-10969
PE-AX-13279
MI-ES-10840
PE-SB-7430
PE-SB-7429
CI-BJ-10658
PE-WP-7427
PE-WP-7428

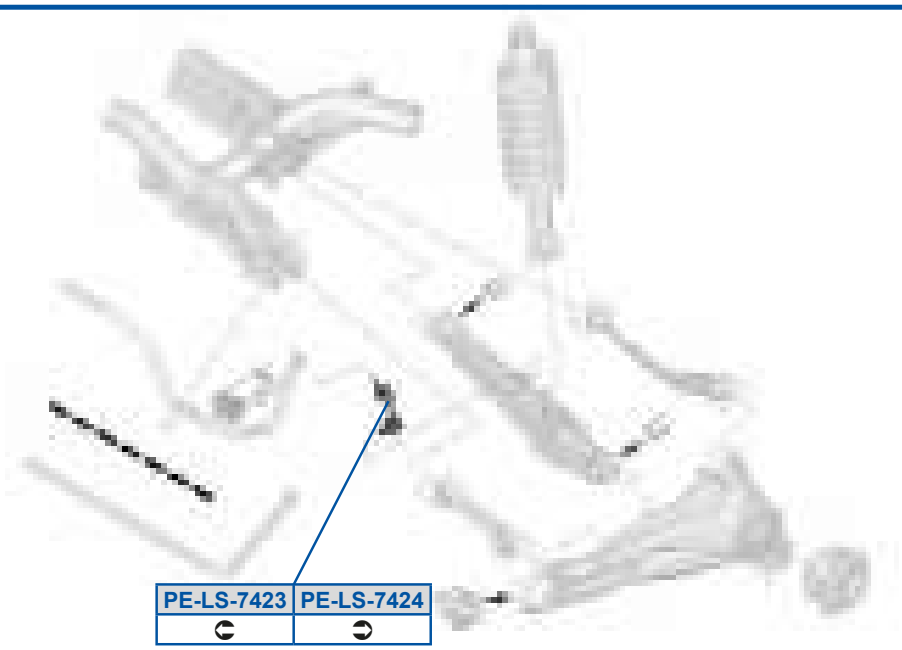
PE-LS-7423
PE-LS-7424

QV5PX598DCF
AC98n /403AC9 7 /40

aS5Zd5EB>C
C7FECF

QV5dP5EGAF
C7GBQD

aS5dP5EB>G
AC97 73AC97 G

QV5dP5EGAG
C8E9CF

aS5dP5EBA8
8D7GG87DF73AC97 7

[V5Sd598FB8
8D7EC79BF7

aS5h a5EB>E
AC97 73AC97 G

[V5dP598GDG

aS5h a5EB>F
AC98n83AC98 7

aS5Oi 59A>EG
8D7FCA98F7

aS5Zd5EB>A
C8EFBF

aS5Zd5EB>B
C8EFBG

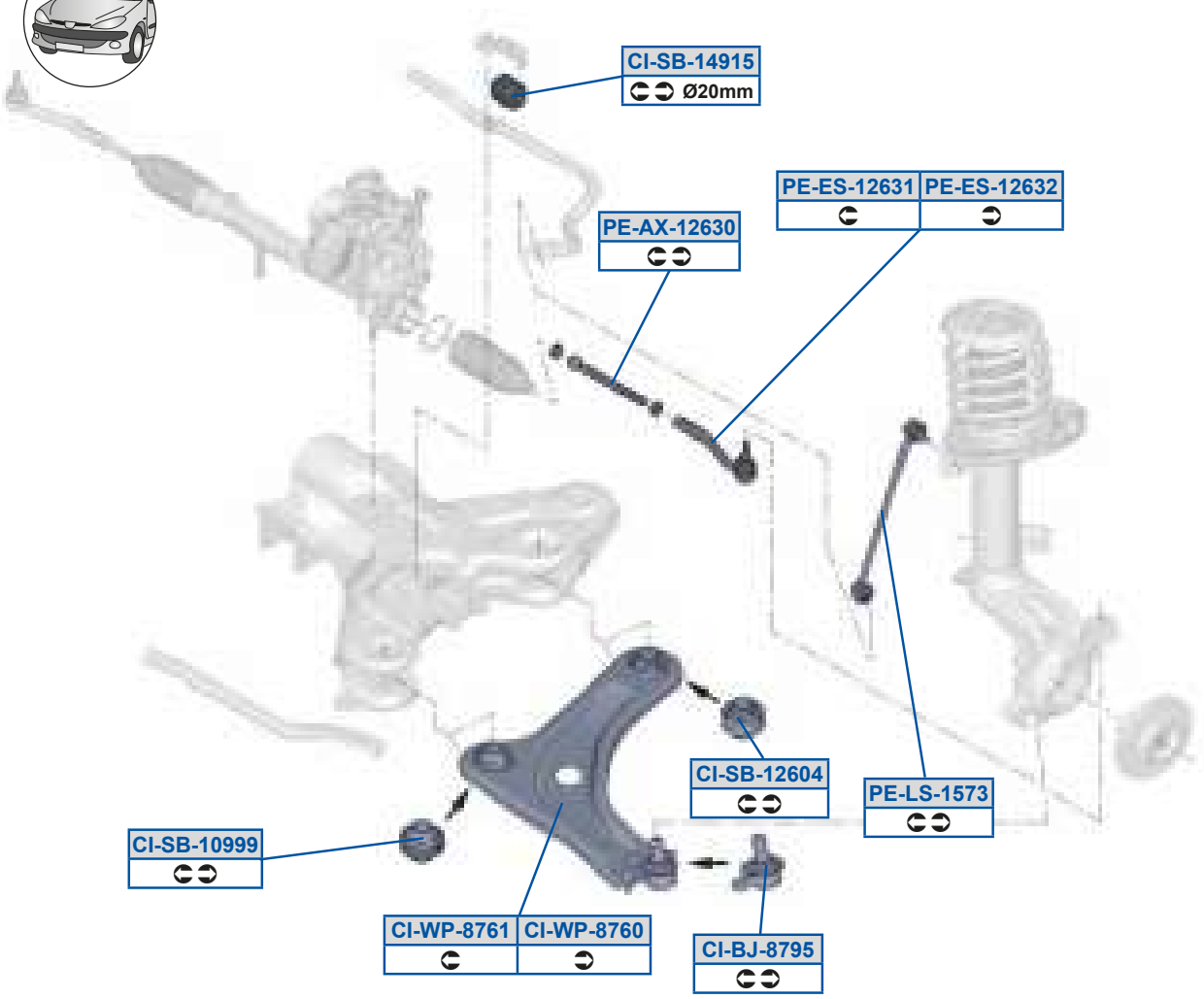
CI-SB-14915
Ø20mm
PE-ES-12631
PE-ES-12632
PE-AX-12630
CI-SB-12604
PE-LS-1573
CI-SB-10999
CI-WP-8761
CI-WP-8760
CI-BJ-8795

QW5PX5FEGC
ADB7EE

QW5dP598GGG
AC9AQ 3AC9ASO

QW5dP59>D8B
AC9ASQ3AC9ASS

QW5dP59BG9C
C7F8i A

QW5h a5FED8
AC98oG

QW5h a5FED9
AC97 E

aS5Oi 59>DA8
8D7F79CAF7

aS5Sd59>DA9
8D7F79C8F7

aS5Sd59>DA>
8D7F79C9F7

aS5Zd59CEA
C7FEBC3C7FECG

QB Q x OZOr 1	9978B 8E799	QB WOZQr 1	9978B 8E799
QB dt	8E78D		

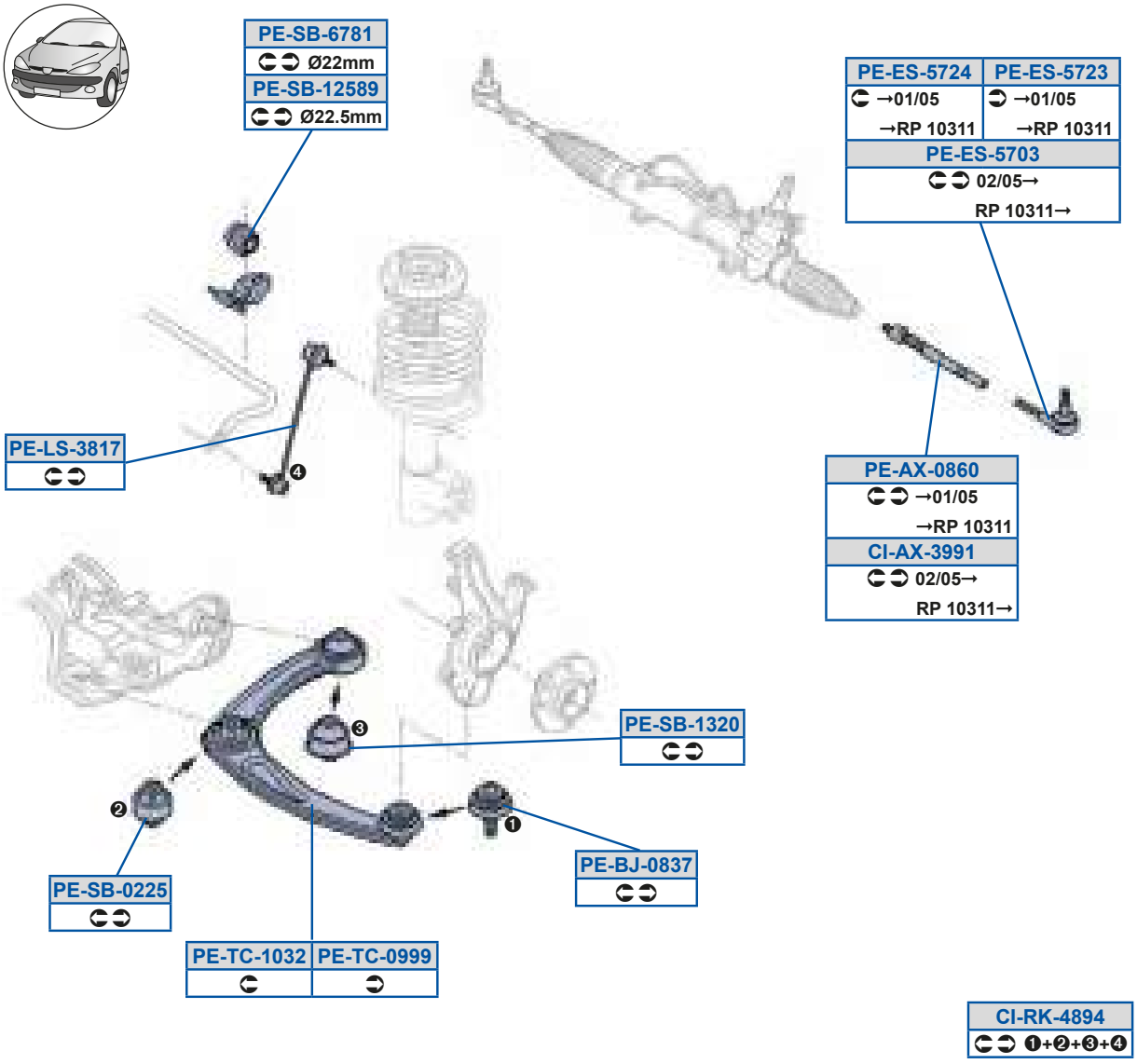

CI-RK-4894
❶+❷+❸+❹

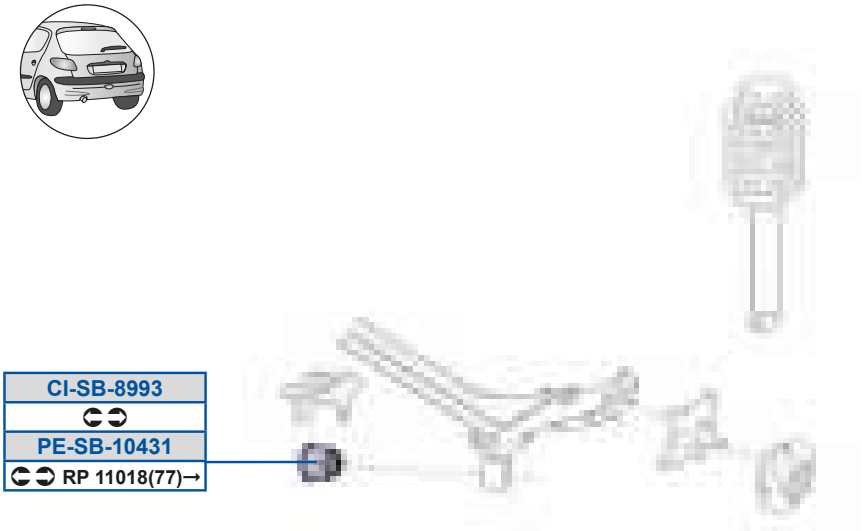

QV5Oi 5AGG9
AF89SC

QV5c Y5BFGB

QV5dP5FGGA
C8A8OB

aS5Oi 58FD8
AF89S7

aS5PX58FAE
ADB7CA3ADB7D7

aS5Sd5CE8A
AF8E7G /40 3AF8E87 /40

aS5Sd5CE>A
AF8EA73AF8EB8

aS5Sd5CE>B
AF8EA83AF8EB9

aS5Zd5AF9E
C7FEC73C7FECE

aS5dP58>>C
AC9AG8

aS5dP598BA9
C8A8OC

aS5dP59>CFG
C7GBQB3C7GBS9

aS5dP59A>8
AC9AEE3AC9AG9

aS5dP5DEF9
C7GBFF

aS5eQ58GGG
AC98YA3AC98i A

aS5eQ598A>
AC97YF3AC97i A

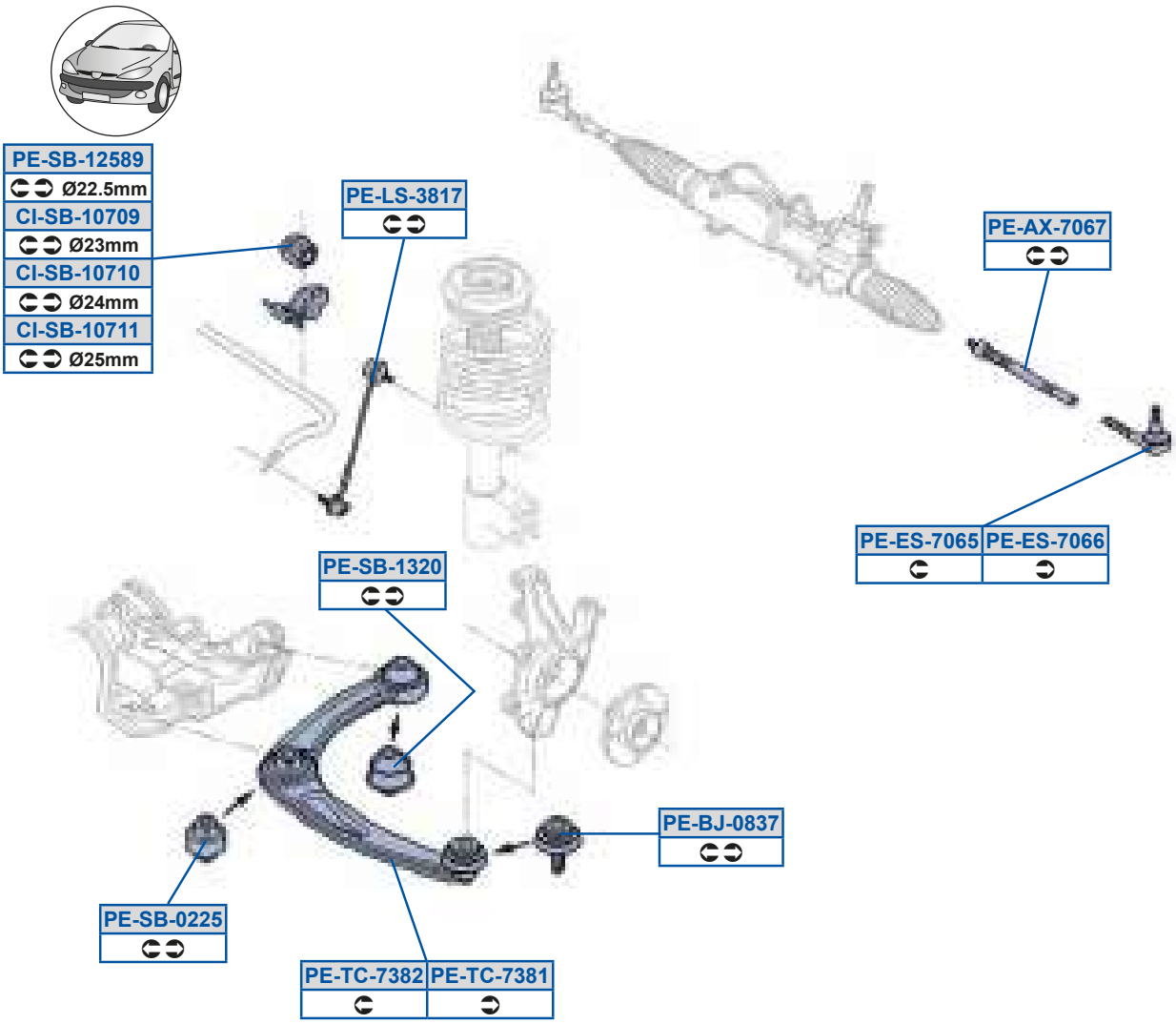
PE-SB-12589
Ø22.5mm
CI-SB-10709
Ø23mm
CI-SB-10710
Ø24mm
CI-SB-10711
Ø25mm
PE-LS-3817
PE-AX-7067
PE-ES-7065
PE-ES-7066
PE-SB-1320
PE-BJ-0837
PE-SB-0225
PE-TC-7382
PE-TC-7381

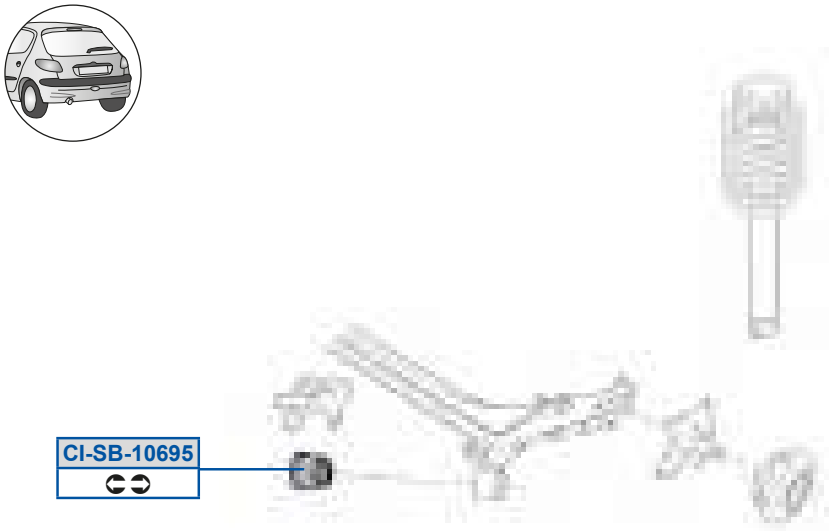
CI-SB-10695

QV5dP598DGC
C8A8UB

QV5dP598E8G
C7GBSA

QV5dP598E98
C7GBSB

QV5dP598E99
C7GBSE

aS5Oi 5E8DE
AF89T9

aS5PX58FAE
ADB7CA3ADB7D7

aS5Sd5E8DC
AF8EED3AF8EFG

aS5Sd5E8DD
AF8EEC3AF8EFF

aS5Zd5AF9E
C7FEC73C7FECE

aS5dP58>>C
AC9AG8

aS5dP59>CFG
C7GBQB3C7GBS9

aS5dP59A>8
AC9AEE3AC9AG9

aS5eQ5EAF9
AC98nA

aS5eQ5EAF>
AC97 9

QB U t waévt Wof Or 1	9878D	QB aévt W[ag Of Rr 1	9878D 8F79A

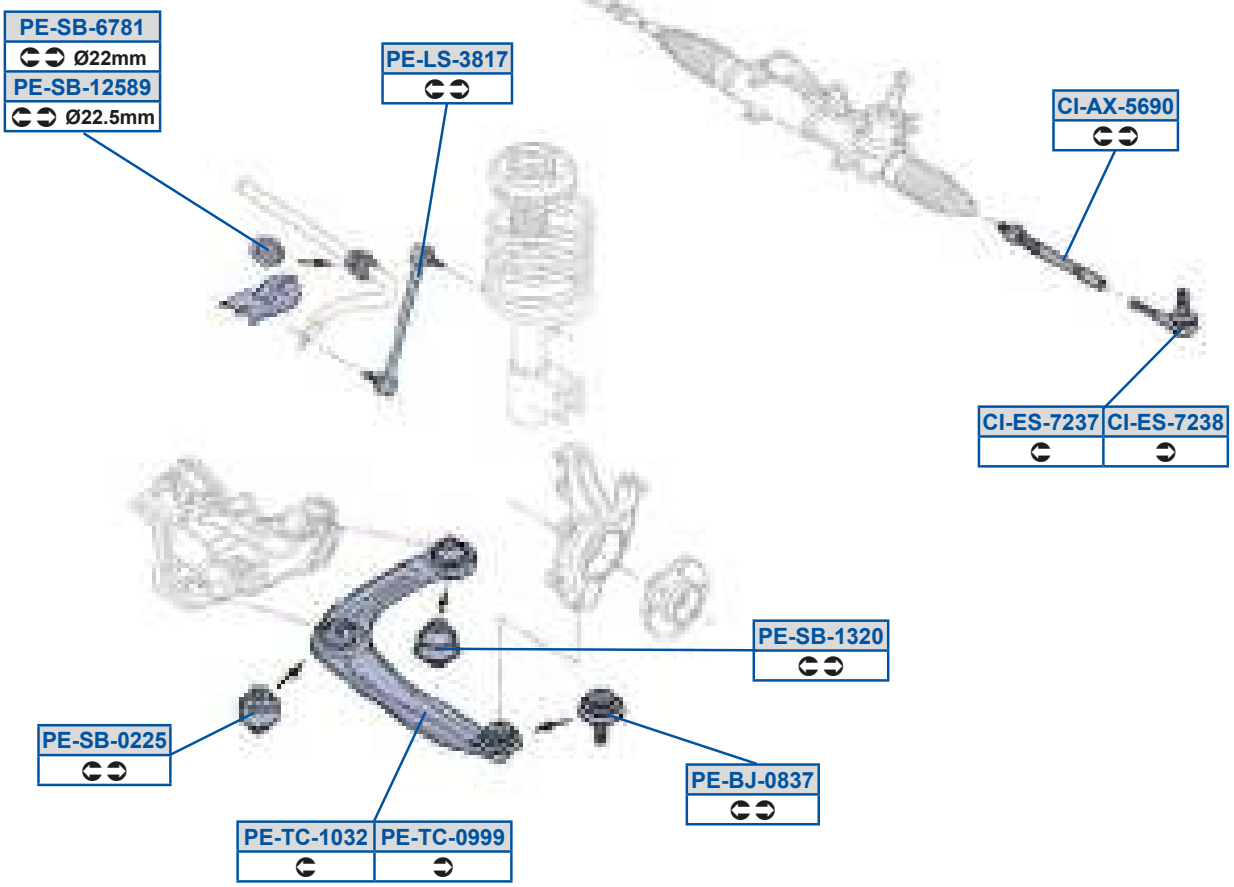

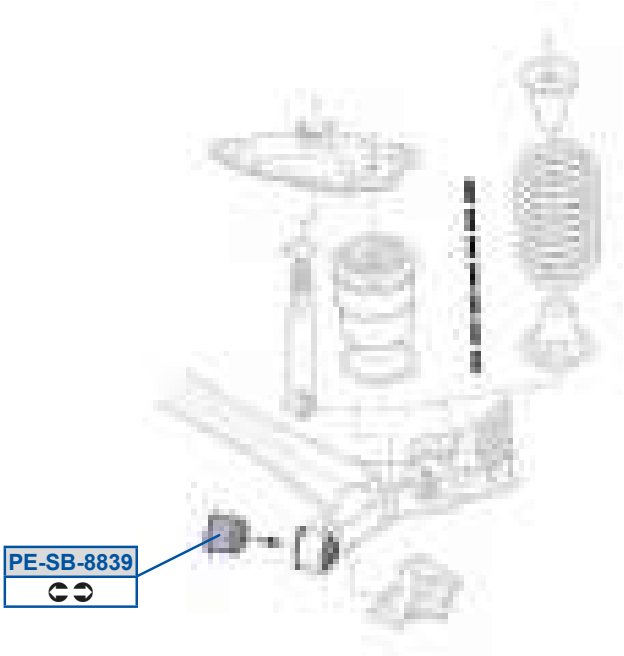

MOOG

QV5Oi 5CDG8
AF89SG

QV5Sd5E>AE
AF8EE8

QV5Sd5E>AF
AF8EE9

aS5PX58FAE
ADB7CA3ADB7D7

aS5Zd5AF9E
C7FEC73C7FECE

aS5dP58>>C
AC9AG8

aS5dP59>CFG
C7GBQB3C7GBS9

aS5dP59A>8
AC9AEE3AC9AG9

aS5dP5DEF9
C7GBFF

aS5dP5FFAG
C8A8T9

aS5eQ58GGG
AC98YA3AC98i A

aS5eQ598A>
AC97YF3AC97i A

QBU t waévt WW	8G79A	QB aévt WW	8; 79A

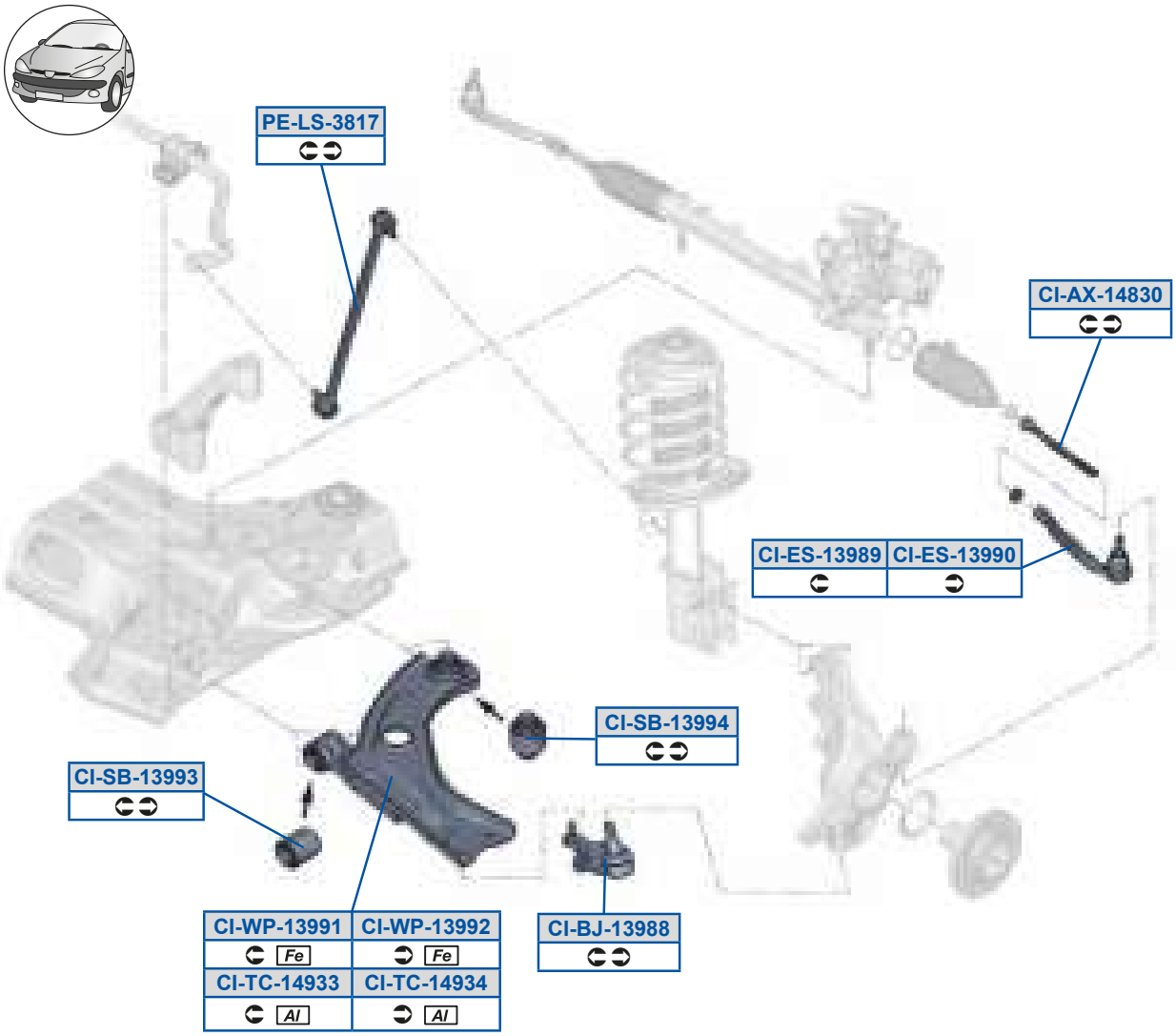

MOOG

QV5OI 59BFA8
8D87F8EDF7

QV5PX59AGFF
GF7ABAB7F7

QV5Sd59AGFG
8D87F8EEF7

QV5Sd59AGG8
8D87F8EFF7

QV5dP59AGGA
GDED7A98F7

QV5dP59AGGB
GDED7AC9F7

QV5eQ59BGAA
GF77CGDDF7

QV5eQ59BGAB
GF77CGDCF7

QV5h a59AGG9
GDEFA88AF7

QV5h a59AGG>
GDEFA889F7

aS5Zd5AF9E
C7FEC73C7FECE

QC WORQr 1	8A789 8A78C	QC WP xt 0RSr 1	8D789 8F78B
QC WOc Qr 1	8F78B	QC WP xt 0c Sr 1	8G78B

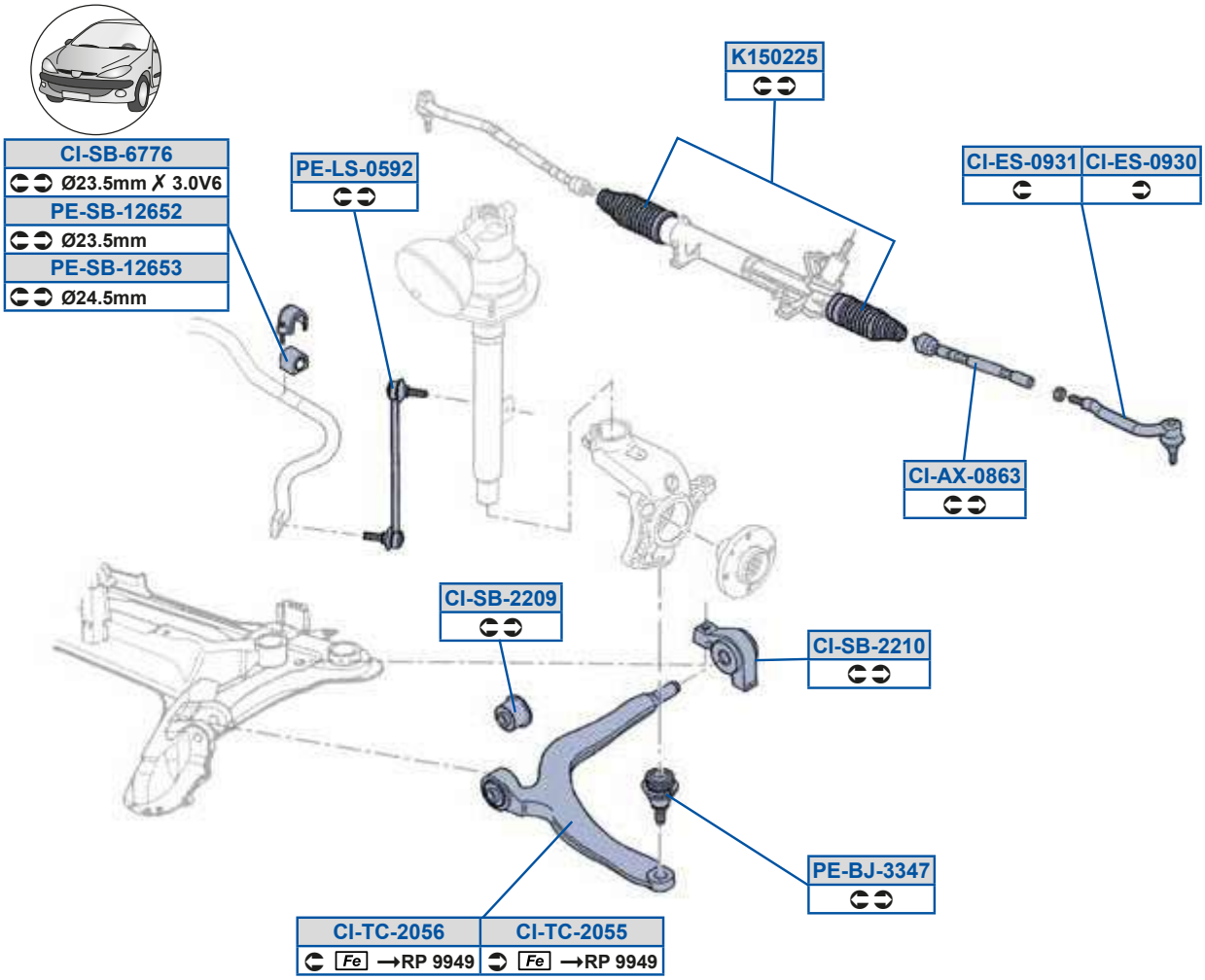

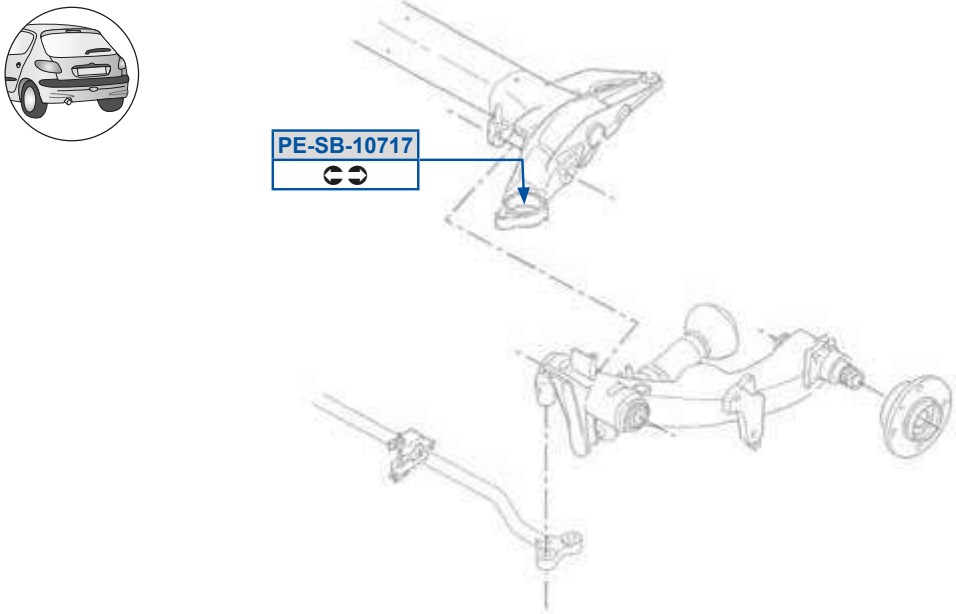

MOOG

QW5Oi 58FDA
AF89QF

Y9C8>>C
B7DDDB

QW5Sd58GA8
AF8ECB3AF8ED7

aS5PX5AABE
ADB79F3ADB7AB

QW5Sd58GA9
AF8ECA3AF8ECG

aS5Zd58CG>
C7FEBA3C7FEBF

QW5dP5>>8G
AC9AFB

aS5dP598E9E
C8A8O73C8A8OE

QW5dP5>>98
AC9AGC3AC9AOn

aS5dP59>DC>
C7GBGF3C7GBTA

QW5dP5DEED
C7GBFA

aS5dP59>DCA
C7GBO7

QW5eQ5>8CC
AC98UA3AC98Y7

QW5eQ5>8CD
AC97YA3AC97i 7

QC WWOc Rr 1	8; 78F	QC WWP xt 0eRr 1	8; 78F

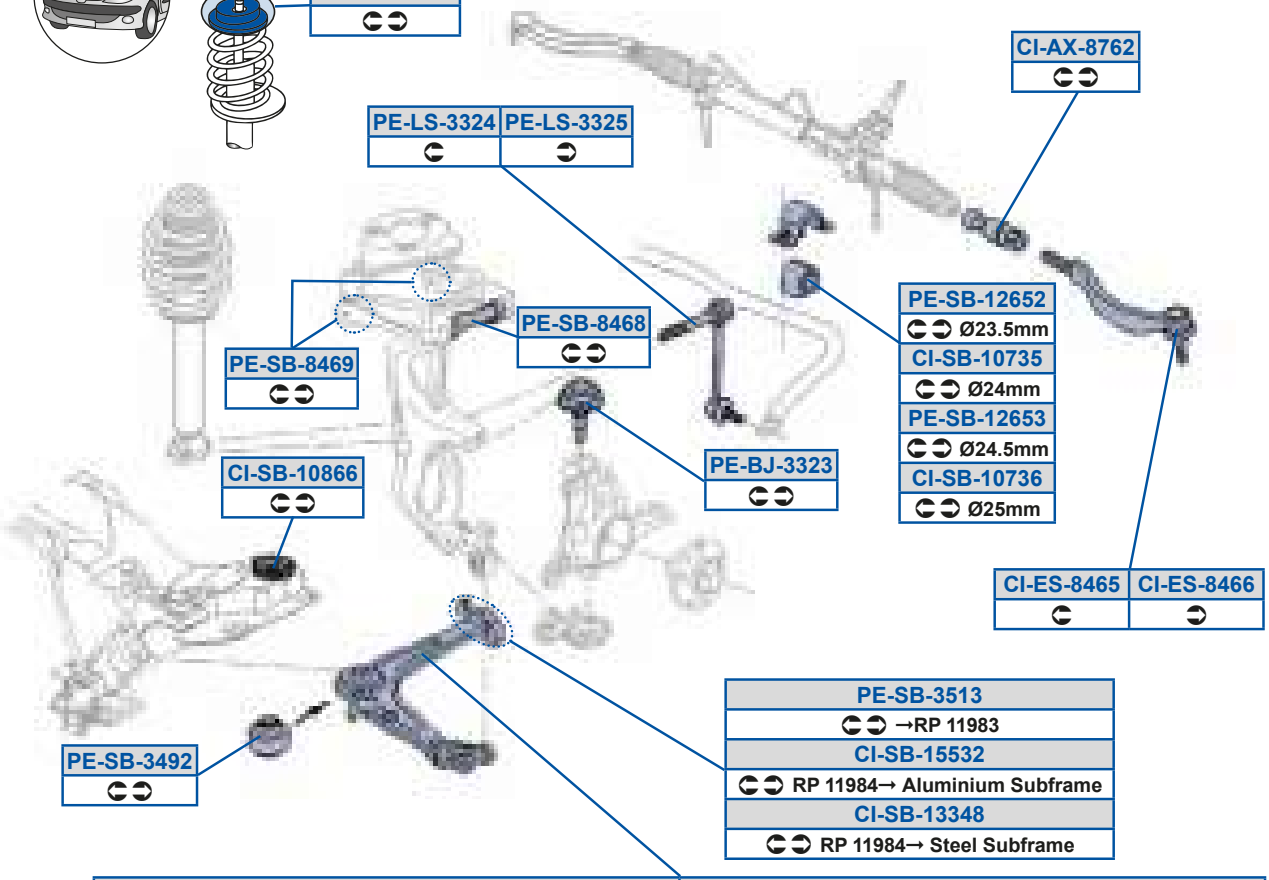

CI-TC-15533	CI-TC-15534
→RP 11983 ✗ Variable suspension RP 11984→ ✗ Variable suspension, Aluminium Subframe	→RP 11983 ✗ Variable suspension RP 11984→ ✗ Variable suspension, Aluminium Subframe
CI-TC-15535	**CI-TC-15536**
→RP 11983 ✓ Variable suspension RP 11984→ ✓ Variable suspension, Aluminium Subframe	→RP 11983 ✓ Variable suspension RP 11984→ ✓ Variable suspension, Aluminium Subframe
CI-TC-12665	**CI-TC-12666**
RP 11984→ ✓ Steel Subframe	RP 11984→ ✓ Steel Subframe

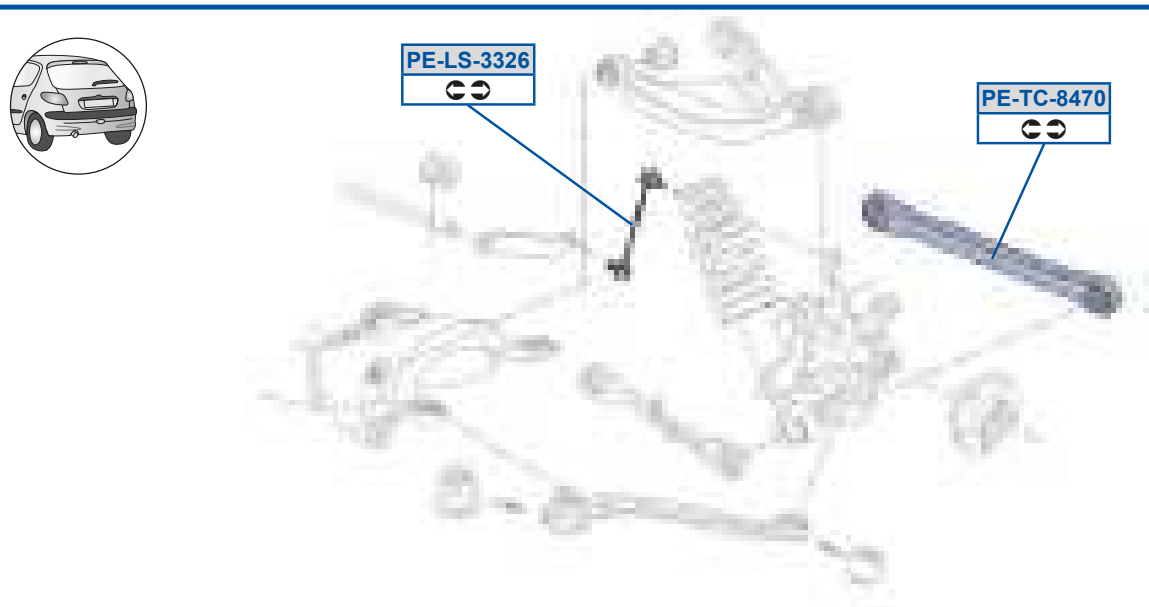

MOOG

QV5Oi 5FED>
AF89TA

QV5e Q59>DDC
AC97 D

a S5Zd5AA>C
C7FECA

a S5d P5FBDG
AC9AQO

QV5Sd5FBDC
8D7GGBF9F73AF8EF7

QV5e Q59>DDD
AC98t E

a S5Zd5AA>D
C8EFBD3C8EFC9

a S5e Q5FBE8
C8ECQT

QV5Sd5FBDD
8D7GGBFAF73AF8EF8

QV5e Q59CCAA
AC97 8

a S5d P598G>C
C7AFSD

QV5d P598EAC
C7GBGG

QV5e Q59CCAB
AC98oB

a S5d P59>DC>
C7GBGF3C7GBTA

QV5d P598EAD
C7GBO8

QV5e Q59CCAC
AC97 9

a S5d P59>DCA
C7GBO7

QV5d P598FDD
AC7BAF

QV5e Q59CCAD
AC98oC

a S5d P5ABG>
AC9AOI

QV5d P59AABF
AC97 D /403AC98t E /40

a S5PX5AA>A
ADB7CE3ADB7EB

a S5d P5AC9A
AC98XD

QV5d P59CCA>
AC97 8 /403AC97 9 /40

a S5Zd5AA>B
C7FEC9

a S5d P5FBDF
AC9AOZ3AC9AO

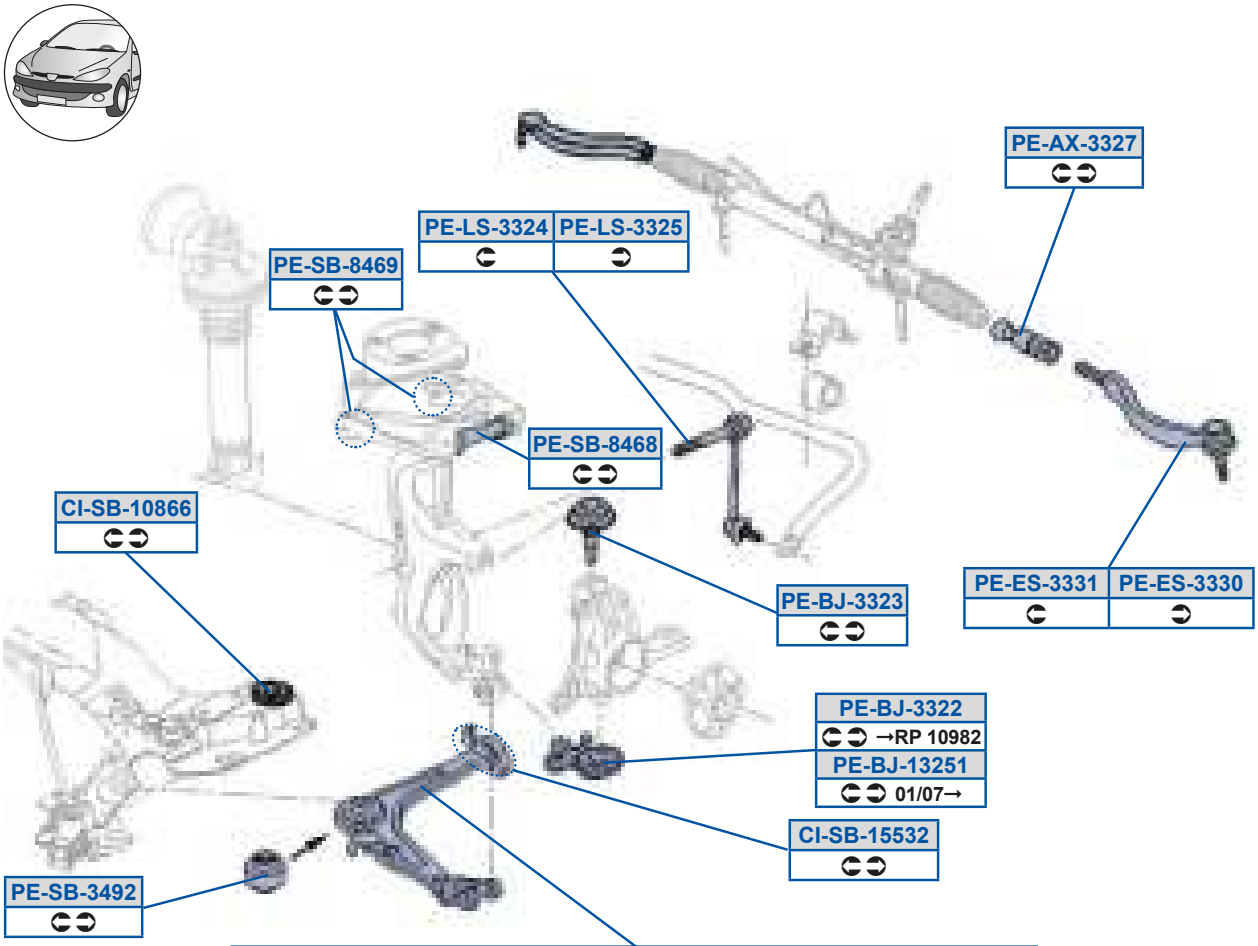

CI-TC-15535	CI-TC-15536
✗ Hydractive Suspension	✗ Hydractive Suspension
→RP 11514 ✓ Hydractive Suspension	→RP 11514 ✓ Hydractive Suspension
CI-TC-15533	**CI-TC-15534**
RP 11515→ ✓ Hydractive Suspension	RP 11515→ ✓ Hydractive Suspension

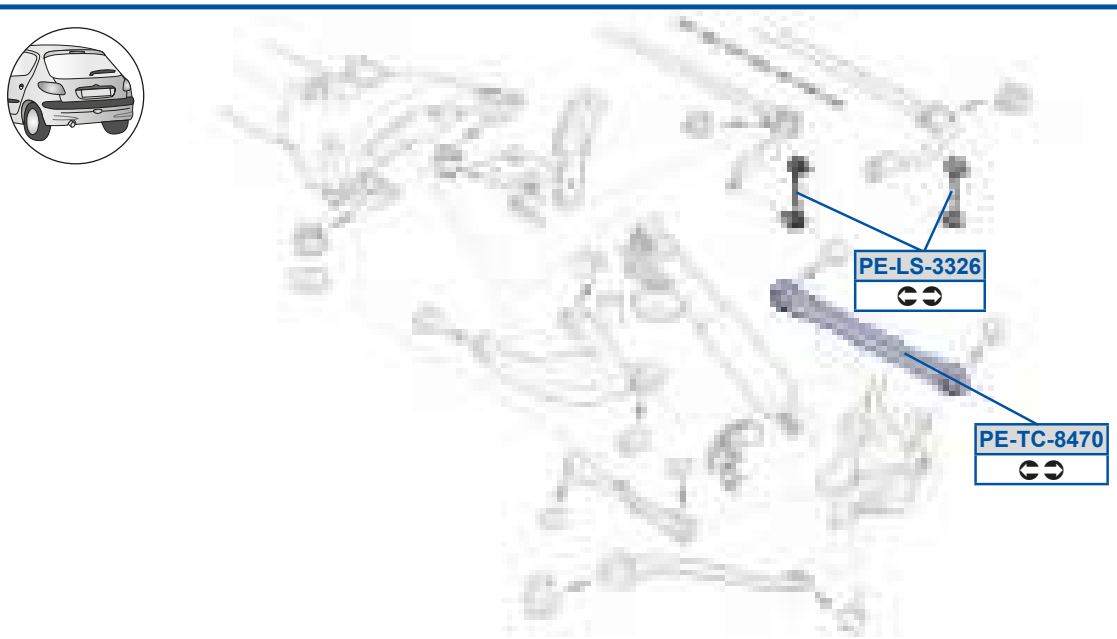

QV5dP598FDD
AC7BAF

aS5PX5AA>>
ADB7CF3ADB7E9

aS5dP5FBDF
AC9AOZ3AC9AO

QV5dP59CCA>
AC97 8 /40 3AC97 9 /40

aS5PX5AA>A
ADB7CE3ADB7EB

aS5dP5FBDG
AC9AQO

QV5eQ59CCAA
AC97 8

aS5Sd5AAA8
AF8ECE

aS5eQ5FBE8
C8ECQT

QV5eQ59CCAB
AC98oB

aS5Sd5AAA9
AF8ECF

QV5eQ59CCAC
AC97 9

aS5Zd5AA>B
C7FEC9

QV5eQ59CCAD
AC98oC

aS5Zd5AA>C
C7FECA

aS5Oi 5AA>E
AF897773AF89SE

aS5Zd5AA>D
C8EFBD3C8EFC9

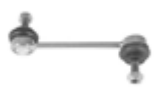

aS5PX59A>C9
ADB7DG

aS5dP5ABG>
AC9AOI

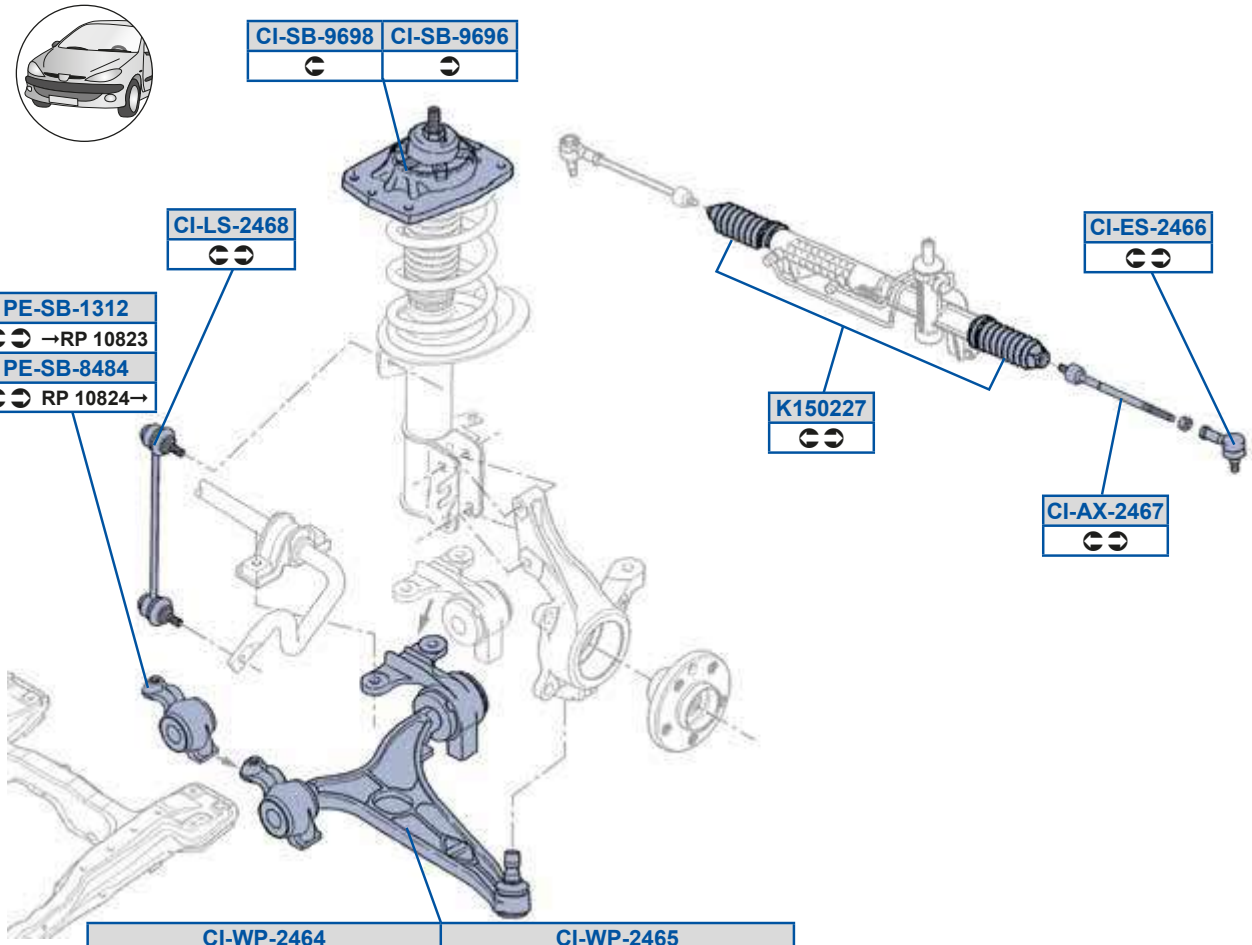

CI-WP-2464	CI-WP-2465
Ø 17mm →RP 10823	Ø 17mm →RP 10823
PE-TC-8483	PE-TC-8482
Ø 17mm RP 10824→	Ø 17mm RP 10824→
CI-TC-7298	CI-TC-7299
Ø 19mm ✓ Eng. DW10CTED4, DW12BTED4	Ø 19mm ✓ Eng. DW10CTED4, DW12BTED4

QV5Oi 5>BDE
AF89773AF89S9

QV5h a5>BDC
AC98V83AC98YD

QV5Sd5>BDD
B7CG89

Y9C8>>E
B7DDE7

QV5Zd5>BDF
C7FEC8

aS5dP59A9>
AC98V73AC98V8

QV5dP5GDGD
C7AC9G3C7ACAF

aS5dP5FBFB
AC97 7 /403AC98t 9 /40

QV5dP5GDGF
C7AC9G3C7ACAF

aS5eQ5FBF>
8D7EC87EF73AC98i D

QV5eQ5E>GF
AC97nF3AC97 F

aS5eQ5FBFA
8D7EC87DF73AC97oC

QV5eQ5E>GG
AC98dG3AC98o7

QV5h a5>BDB
AC97i D3AC98V7

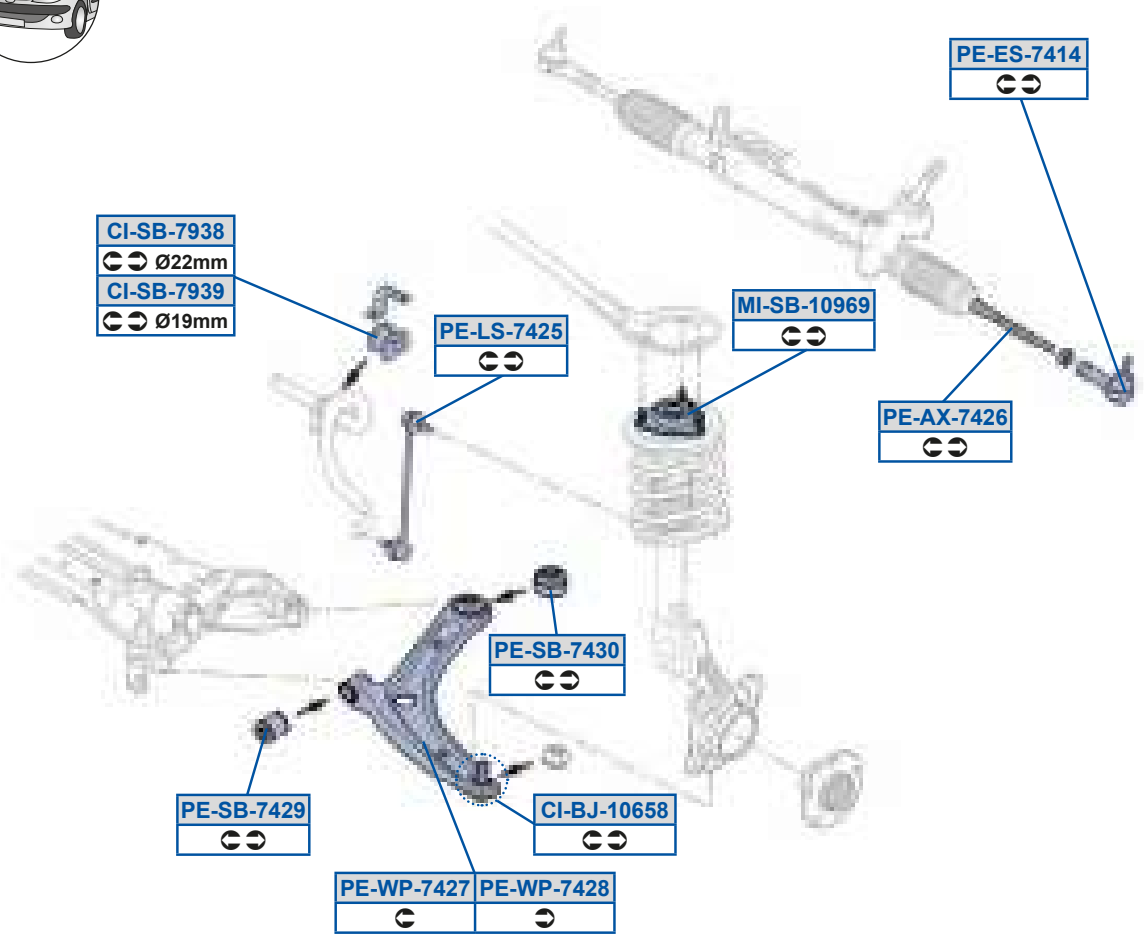
PE-ES-7414
CI-SB-7938
Ø22mm
CI-SB-7939
Ø19mm
PE-LS-7425
MI-SB-10969
PE-AX-7426
PE-SB-7430
PE-SB-7429
CI-BJ-10658
PE-WP-7427
PE-WP-7428

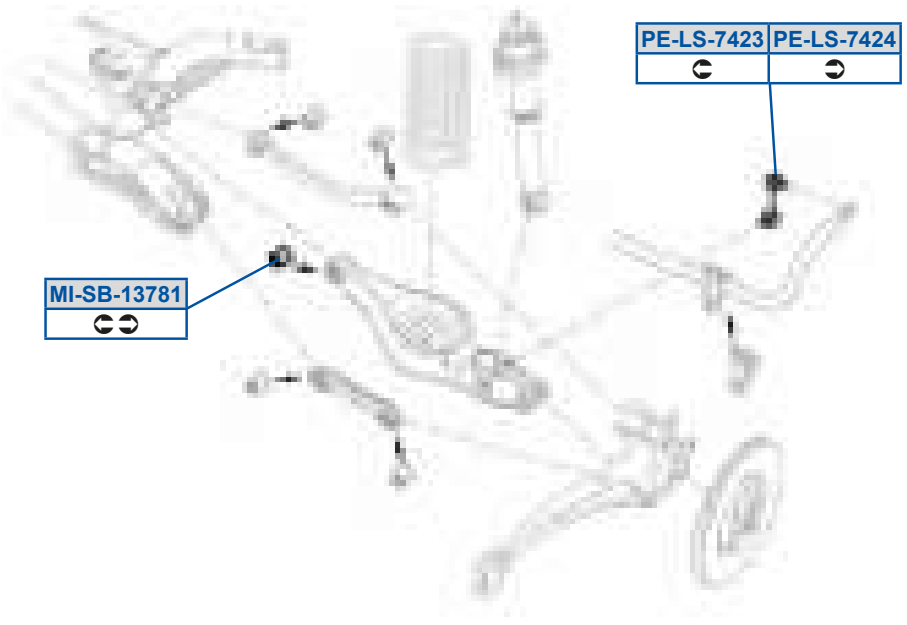
PE-LS-7423
PE-LS-7424
MI-SB-13781
CI-SB-13517

QV5PX598DCF
AC98n /40BAC9 7 /40

QV5dP59AC9E
C8A8VC

QV5dP5EGAF
C7GBQD

QV5dP5EGAG
C8E9CF

[V5dP598GDG

[V5dP59AEF9
C8A8U8

aS5Oi 5EB>D
AF89T8

aS5Sd5EB9B
AF8EEB

aS5Zd5EB>A
C8EFBF

aS5Zd5EB>B
C8EFBG

aS5Zd5EB>C
C7FECF

aS5dP5EB>G
AC97 73AC97 G

aS5dP5EBA8
8D7GG87DF73AC97 7

aS5h a5EB>E
AC97 73AC97 G

aS5h a5EB>F
AC98n83AC98 7

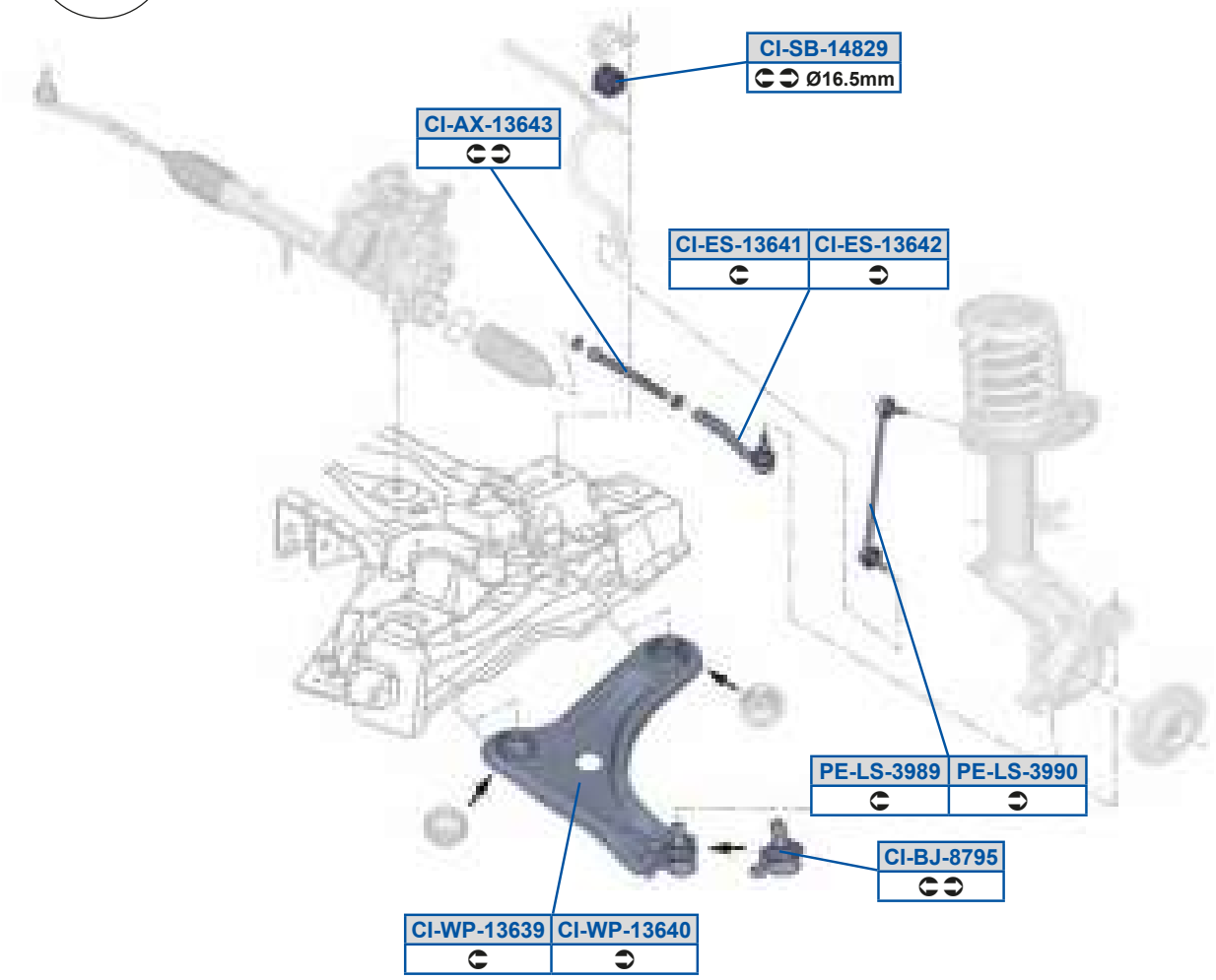
CI-SB-14829
Ø16.5mm
CI-AX-13643
CI-ES-13641
CI-ES-13642
PE-LS-3989
PE-LS-3990
CI-BJ-8795
CI-WP-13639
CI-WP-13640

QV5Oi 59ADBA
8D7FDC98F7

QV5PX5FEGC
ADB7EE

QV5Sd59ADB9
8D7FDC99F7

QV5Sd59ADB>
8D7FDC9AF7

QV5dP59BF>G
8D7FAFFCF7

QV5h a59ADAG
GDEC7A8FF7

QV5h a59ADB8
GDEC79FFF7

aS5Zd5AGFG
C7FEDF

aS5Zd5AGG8
C7FEDG

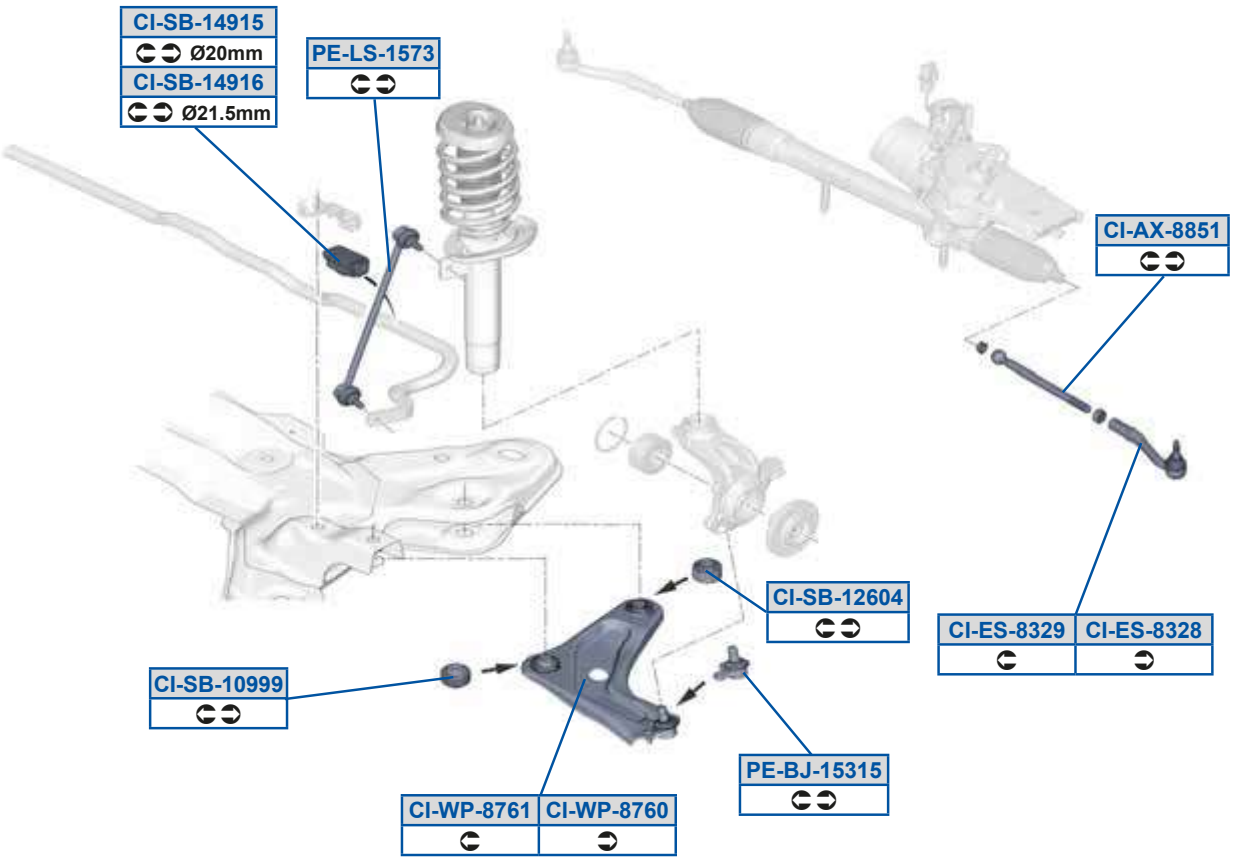
CI-SB-14915
Ø20mm
CI-SB-14916
Ø21.5mm
PE-LS-1573
CI-AX-8851
CI-SB-12604
CI-ES-8329
CI-ES-8328
CI-SB-10999
PE-BJ-15315
CI-WP-8761
CI-WP-8760

QW5Oi 5FFC9
AF89TD

QW5h a5FED9
AC97 E

QW5Sd5FA>F
AF8EG8

aS5PX59CA9C
ADB7EF

QW5Sd5FA>G
AF8EG9

aS5Zd59CEA
C7FEBC3C7FECG

QW5dP598GGG
AC9AQ 3AC9ASO

QW5dP59>D8B
AC9ASQ3AC9ASS

QW5dP59BG9C
C7F8i A

QW5dP59BG9D
GDEBEDAF7

QW5h a5FED8
AC98oG

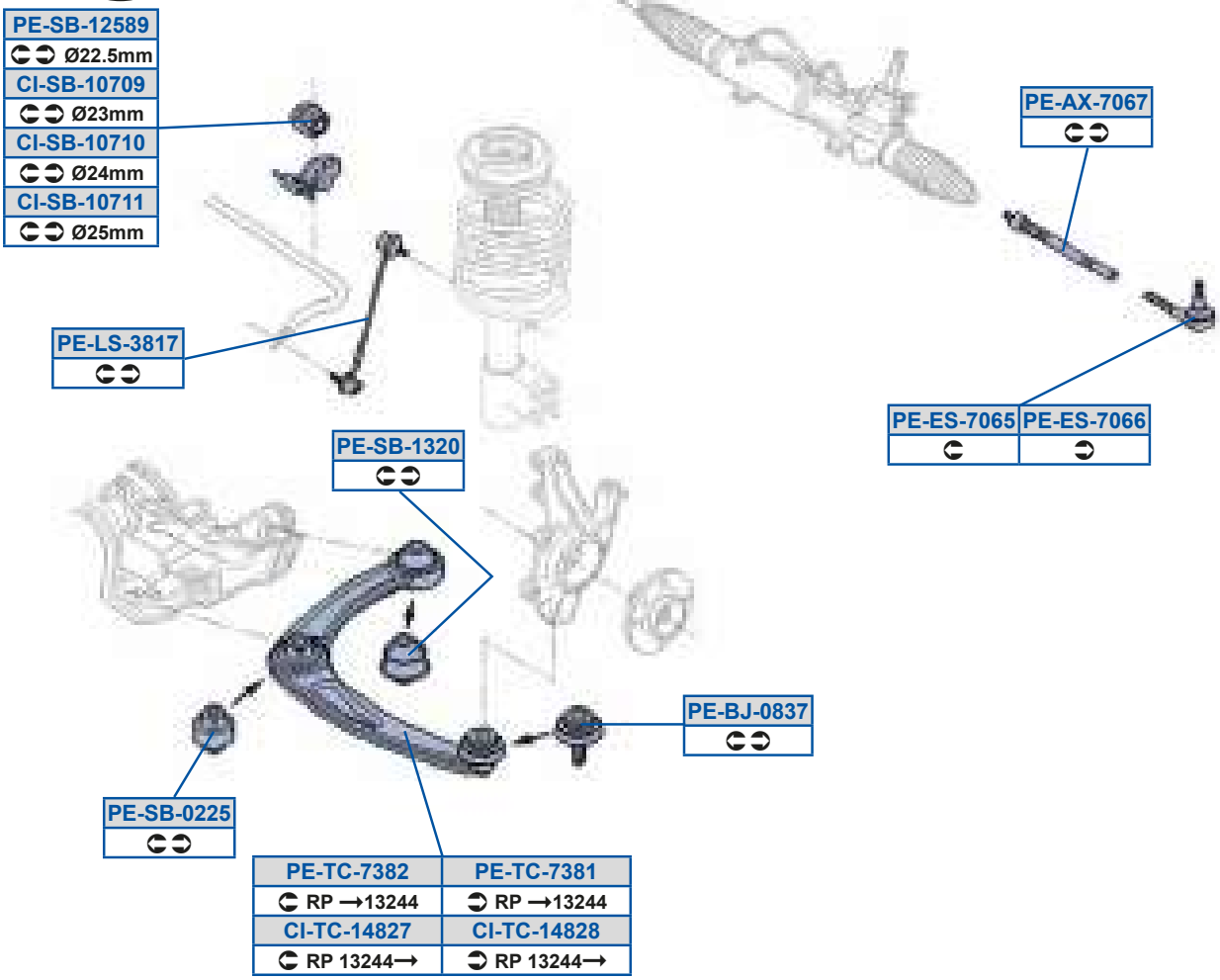
PE-SB-12589
Ø22.5mm
CI-SB-10709
Ø23mm
CI-SB-10710
Ø24mm
CI-SB-10711
Ø25mm
PE-LS-3817
PE-AX-7067
PE-ES-7065
PE-ES-7066
PE-SB-1320
PE-BJ-0837
PE-SB-0225
PE-TC-7382
RP →13244
PE-TC-7381
RP →13244
CI-TC-14827
RP 13244→
CI-TC-14828
RP 13244→

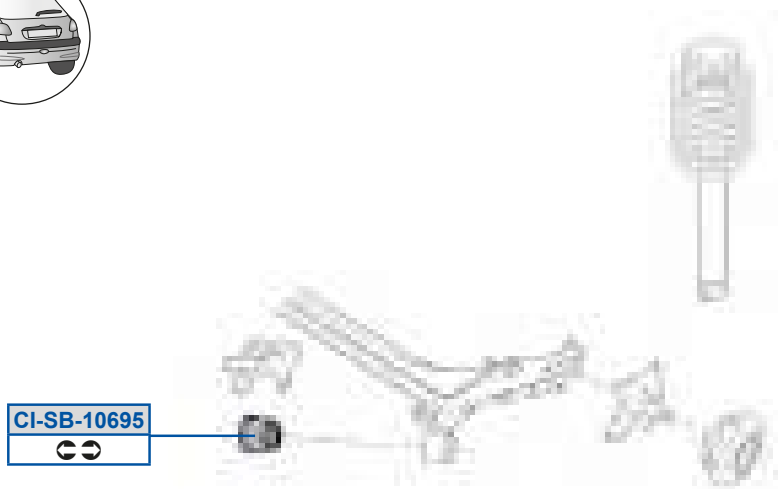
CI-SB-10695

QV5dP598DGC
C8A8UB

aS5Sd5E8DC
AF8EED3AF8EFG

QV5dP598E8G
C7GBSA

aS5Sd5E8DD
AF8EEC3AF8EFF

QV5dP598E98
C7GBSB

aS5Zd5AF9E
C7FEC73C7FECE

QV5dP598E99
C7GBSE

aS5dP58>>C
AC9AG8

QV5eQ59BF>E
GF7CD7EBF7

aS5dP59>CFG
C7GBQB3C7GBS9

QV5eQ59BF>F
GF7CD7EAF7

aS5dP59A>8
AC9AEE3AC9AG9

aS5Oi 5E8DE
AF89T9

aS5eQ5EAF9
AC98nA

aS5PX58FAE
ADB7CA3ADB7D7

aS5eQ5EAF>
AC97 9

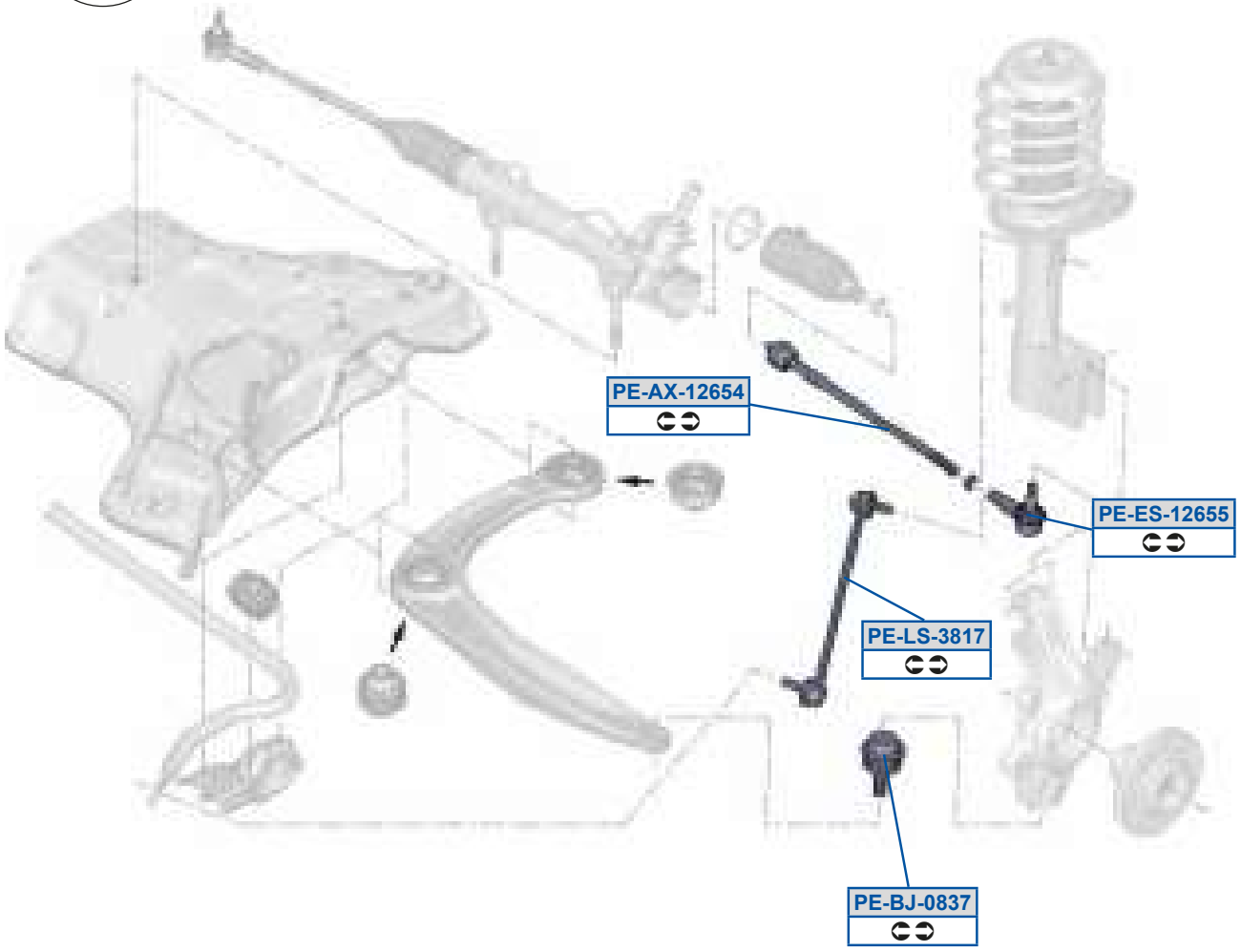
PE-AX-12654
PE-ES-12655
PE-LS-3817
PE-BJ-0837

aS5Oi 59>DCB
AF89TE

aS5PX58FAE
ADB7CA3ADB7D7

aS5Sd59>DCC
AF8EGB

aS5Zd5AF9E
C7FEC73C7FECE

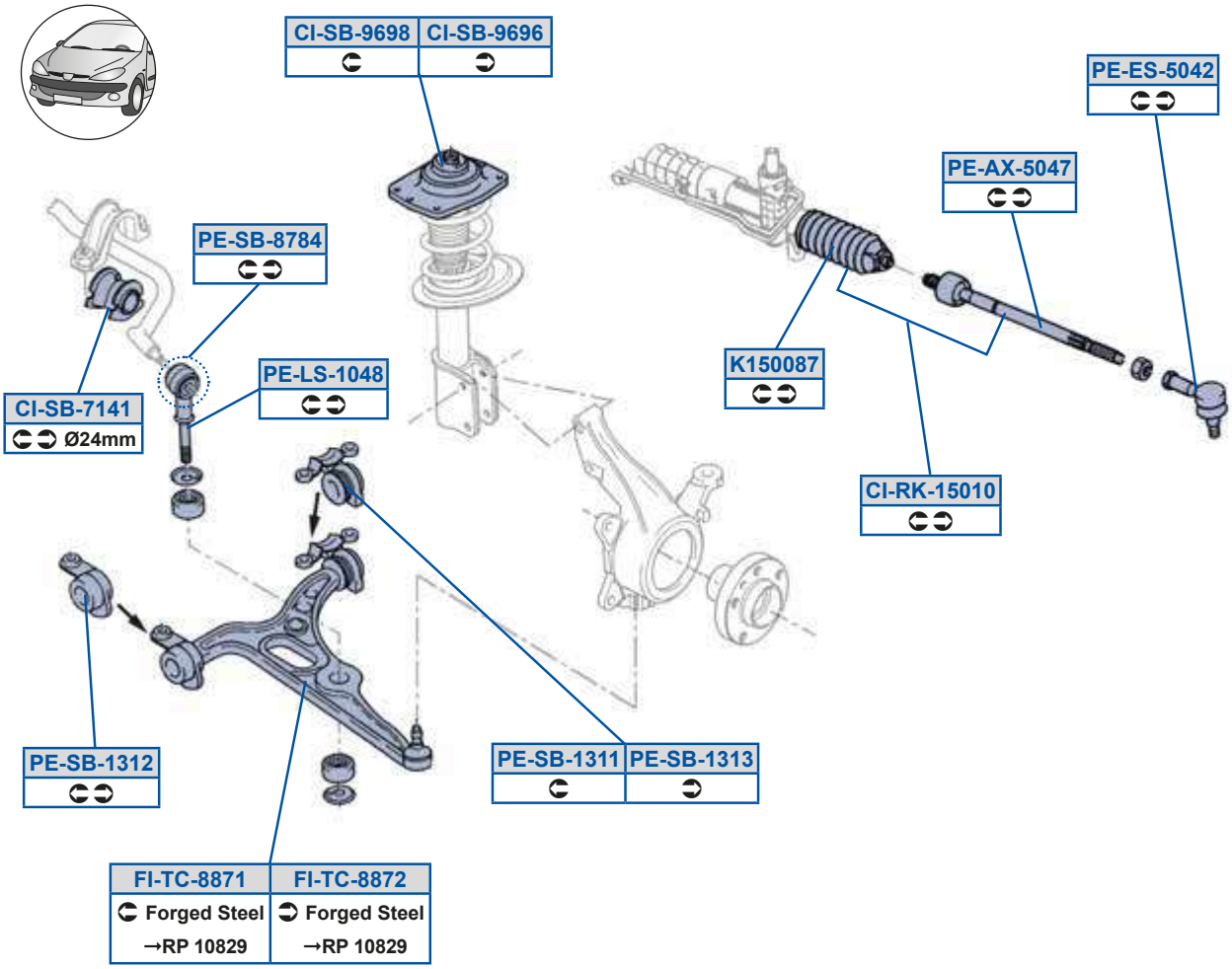
CI-SB-9698
CI-SB-9696
PE-ES-5042
PE-AX-5047
PE-SB-8784
PE-LS-1048
CI-SB-7141
Ø24mm
K150087
CI-RK-15010
PE-SB-1312
PE-SB-1311
PE-SB-1313
FI-TC-8871
Forged Steel
→RP 10829
FI-TC-8872
Forged Steel
→RP 10829

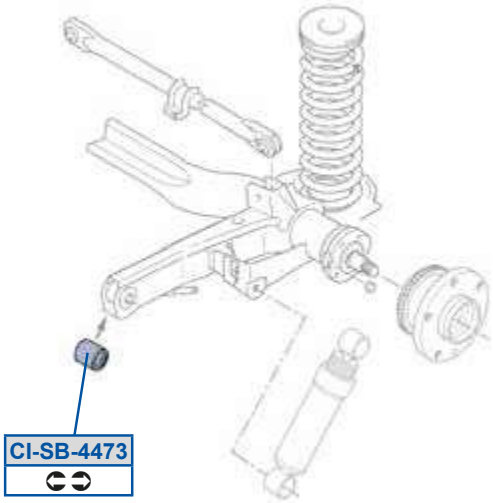
CI-SB-4473

QW5c Y59C898
AF89OB3GCDDGC7FF7

aS5Oi 5C8BE
AF89OB3GCDDGC7FF7

QW5d P5BBEA
8BEGECG7F73C8C9D8

aS5Sd5C8B>
B7CG7G3GB7B7CG7F7

QW5d P5E9B9
C7GBDG

aS5Zd598BF
8A8EB9C7F7o3C7AFACo

QW5d P5GDGD
C7AC9G3C7ACAF

aS5d P59A99
8A7CCC87F73AC97QC /40

QW5d P5GDGF
C7AC9G3C7ACAF

aS5d P59A9>
AC98V73AC98V8

TW5e Q5FFE9
8A8DEAC7F738A8EAFG7F7

aS5d P59A9A
8A7CCC97F73AC98DB /40

TW5e Q5FFE>
8A8A7FB7F738A8DEAD7F7

aS5d P5FEFB
C7GA8C

Y9C88FE
B7DDB8

QWc _]

Xf [aSc7cSZOk P 0, A8Z1	8; 7GB 8B78;	Xf [aSc7cSZOk P 0, BB1	8B78;
Xf [aSc7cSZOk P 0, A8a1	8; 7GB 8B78;	Xf [aSc7cSZOk P 0, BB4l r1	8B78;
Xf [aSc7cSZOk a t y 7QÉt é 0, A81	8A7GB 8B78;	Xf [aSc7cSZOk a t y 7QÉt é 0, BB1	8; 78;

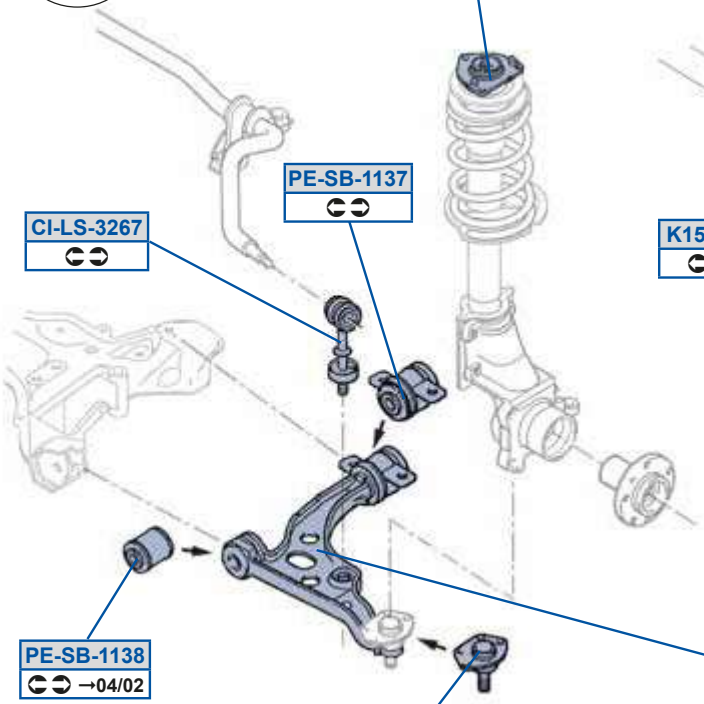

CI-SB-9684	CI-SB-9682
02/94→04/02	02/94→04/02
CI-SB-10082	CI-SB-10083
04/02→	04/02→

FI-AX-7528

FI-ES-7529
→04/02 Ø 14.4mm
CI-ES-2460
04/02→ Ø 17mm

PE-SB-1137

CI-LS-3267

K150119

PE-SB-1138
→04/02

FI-WP-0109	FI-WP-0108
→04/02 ✓ 1.0T, 1.4T ✓ Ø 16mm	→04/02 ✓ 1.0T, 1.4T ✓ Ø 16mm
FI-WP-0111	FI-WP-0110
→04/02 ✓ 1.8T ✓ Ø 18mm	→04/02 ✓ 1.8T ✓ Ø 18mm
FI-WP-3840	FI-WP-0118
04/02→ ✓ 1.0T, 1.4T ✓ Ø 18mm	04/02→ ✓ 1.0T, 1.4T ✓ Ø 18mm
CI-WP-3876	CI-WP-3877
04/02→ ✓ 1.8T ✓ Ø 20mm	04/02→ ✓ 1.8T ✓ Ø 20mm

FI-BJ-7530	FI-BJ-0512
→04/02 ✓ 1.0T, 1.4T Ø 16mm	04/02→ ✓ 1.0T, 1.4T Ø 18mm
FI-BJ-7531	FI-BJ-0513
→04/02 ✓ 1.8T Ø 18mm	04/02→ ✓ 1.8T Ø 20mm

CI-SB-7966

CI-SB-7967

MOOG

QV5Sd5>BD8
B78FS7

QV5Zd5A>DE
C7FEAE

QV5dP5988F>
C7A8EF3C7AFDF

QV5dP5988FA
C7A8EG

QV5dP5EGDD
C8A8E9

QV5dP5EGDE
8A7BDB87F73C8A8EA

QV5dP5GDF>
C7AF8G3C7AFB9

QV5dP5GDFB
C7AF8F3C7AFB8

QV5h a5AFED
8D7EA78BF73AC97Z8

QV5h a5AFEE
8D7EA78AF73AC98VA

TV5Oi 5EC>F
B77D9B3B78FOB

TV5PX58C9>
8AA8DB77F73ADB7CC

TV5PX58C9A
8AA8DB87F73ADB7CB

TV5PX5ECA8
8A79ADF7F73ADB7A9

TV5PX5ECA9
8A77BEA7F73ADB7AA

TV5Sd5EC>G
B78FOA3B78FVB

TV5h a5898F
8A7FD787F73AC98DC

TV5h a5898G
8A7FD777F73A9C7dA

TV5h a58998
8A7FED77F73AC98DD

TV5h a58999
8A7FECG7F73AC97GD

TV5h a5899F
AC98V93AC98XA

TV5h a5AFB8
AC97Z73AC97dA

Y9C899G
B77D993B78F8C

aS5dP599AE
AC9AGB3AC9AOi

aS5dP599AF
AC9AGA

QV5c_] X v W7cvé W3>79GGB5L1I>A84>BBn

Xf [aSc P 7cSZOk gt	8B78D	Xf [aSc P 7cSZOk P	8B78D
Xf [aSc 7cSZOk a t y 7QÉt é	8B78D		

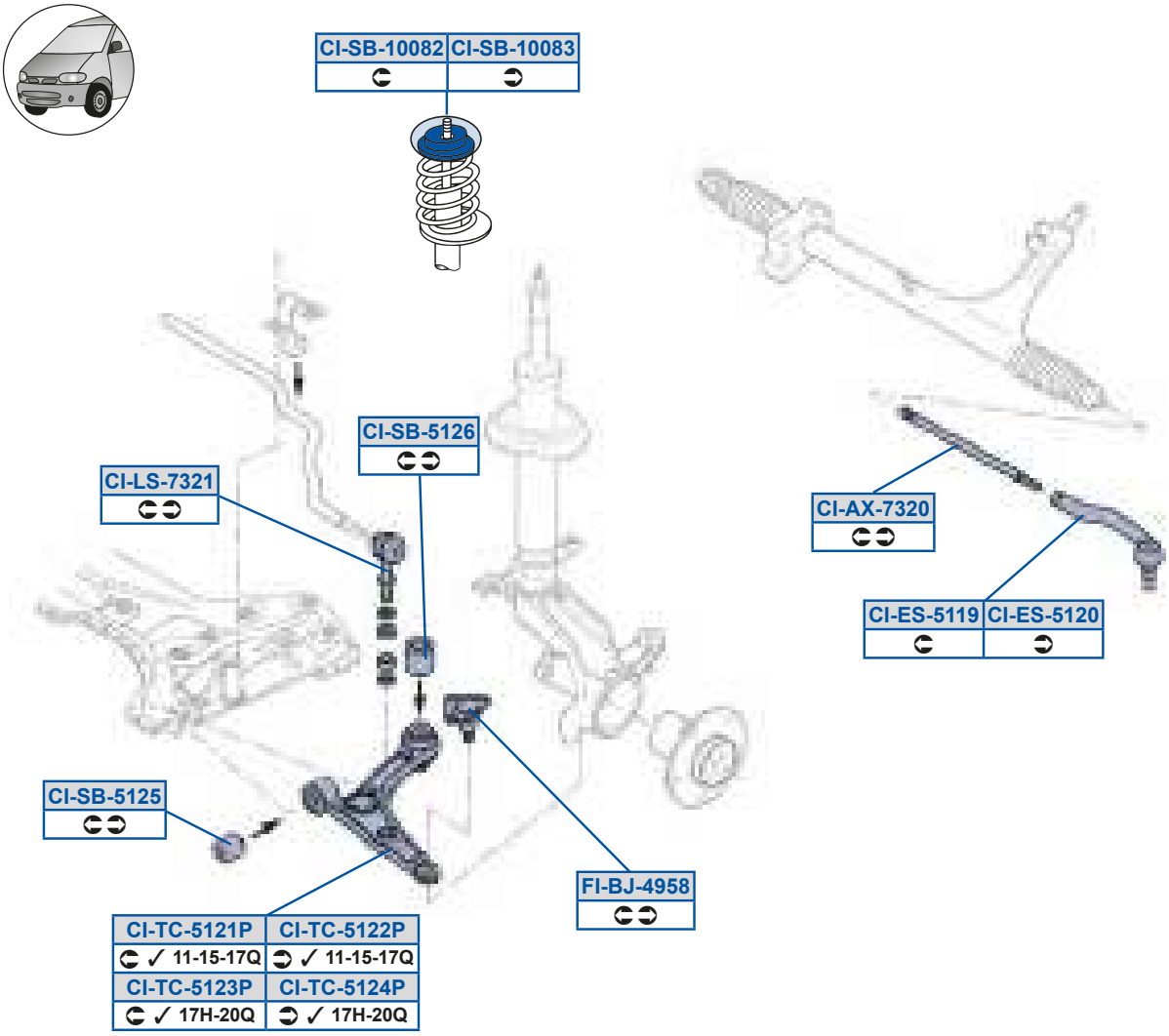

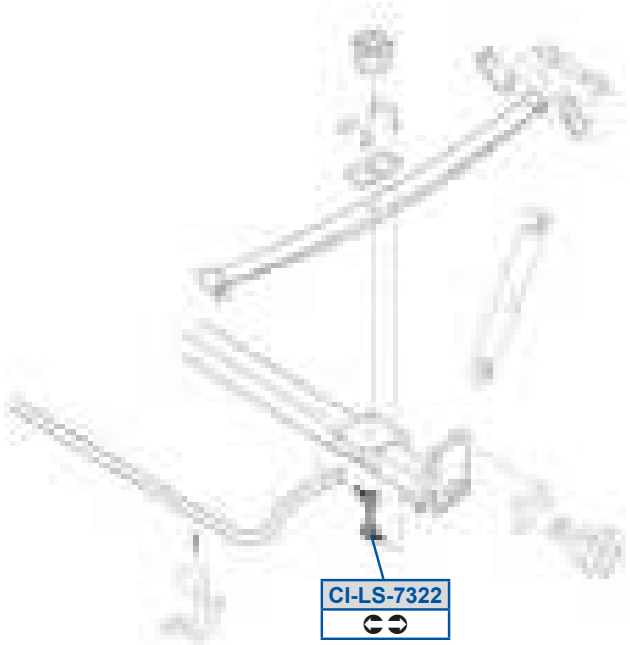

MOOG

QV5Oi 5EA>8
B778SB3B778SBo8

QV5Sd5C99G
8D87GEDBF73AF8EDG

QV5Sd5C9>8
8D87GEDAF73AF8EE7

QV5Zd5EA>9
8ACECE97F7

QV5Zd5EA>>
C8E7TC3C8E7TD

QV5dP5988F>
C7A8EF3C7AFDF

QV5dP5988FA
C7A8EG

QV5dP5C9>C
AC97o7 /403AC97o8 /40

QV5dP5C9>D
AC97o7 /403AC97o8 /40

TV5PX5BGCF
ADB7DE3ADB7ED

Xf [ak P 0Pdr 4Per 4Pkr 4Pl r 1	8B788 9878D	Xf [ak P 7RWaOeQV gt	8D7GB 9878D
Xf [ak7RWaOeQV	8D7GB 9; 78D	Xf [ak7RWaOeQV a t y 7QÉt é	987GG 9878D

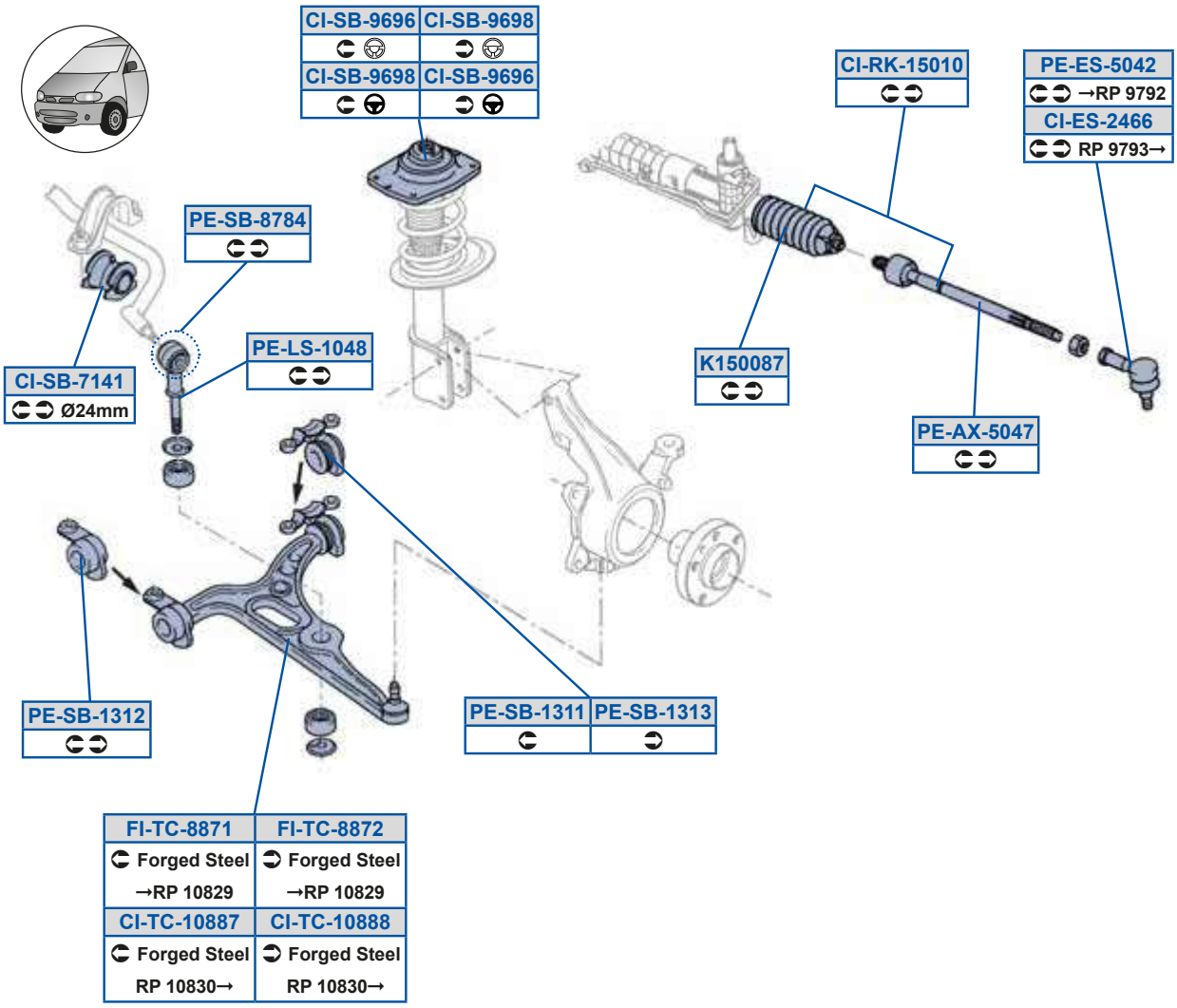

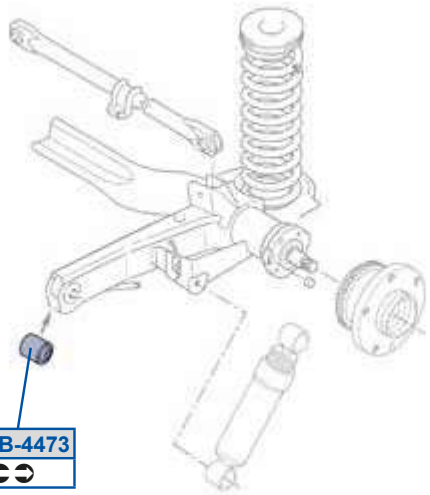

QV5Sd5>BDD
B7CG89

TV5eQ5FFE9
8A8DEAC7F738A8EAFG7F7

aS5dP59A9A
8A7CCC97F73AC98DB/40

QV5cY59C898
AF89OB3GCDDGC7FF7

TV5eQ5FFE>
8A8A7FB7F738A8DEAD7F7

aS5dP5FEFB
C7GA8C

QV5dP5BBEA
8BEGECG7F73C8C9D8

Y9C88FE
B7DDB8

QV5dP5E9B9
C7GBDG

aS5Oi5C8BE
AF89OB3GCDDGC7FF7

QV5dP5GDGD
C7AC9G3C7ACAF

aS5Sd5C8B>
B7CG7G3GB7B7CG7F7

QV5dP5GDGF
C7AC9G3C7ACAF

aS5Zd598BF
8A8EB9C7F7o3C7AFACo

QV5eQ598FFE
AC97oD

aS5dP59A99
8A7CCC87F73AC97QC/40

QV5eQ598FFF
AC98iE

aS5dP59A9>
AC98V73AC98V8

QWc _]

Xf [ak P	89798	Xf [ak P 7RWaOeQV P	8978E
Xf [ak a t y 7QÉt é	8E799		

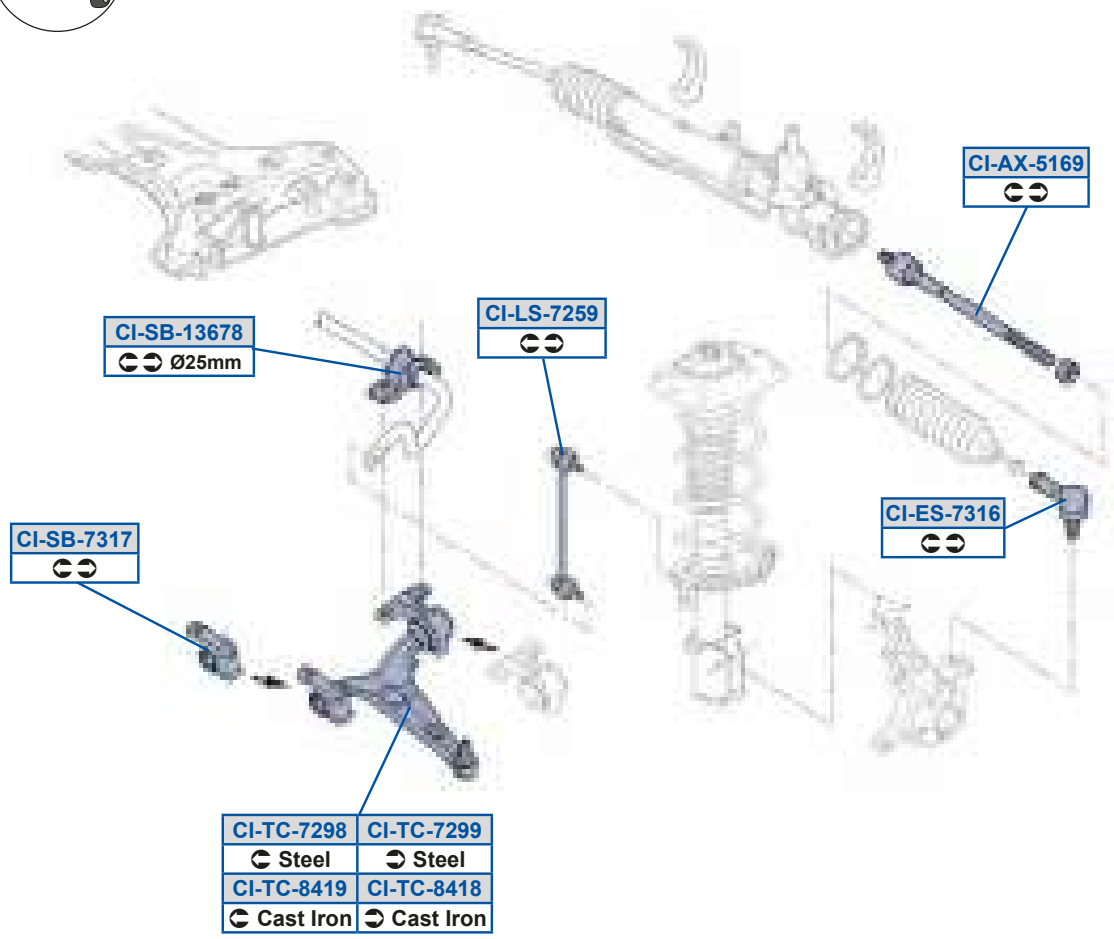

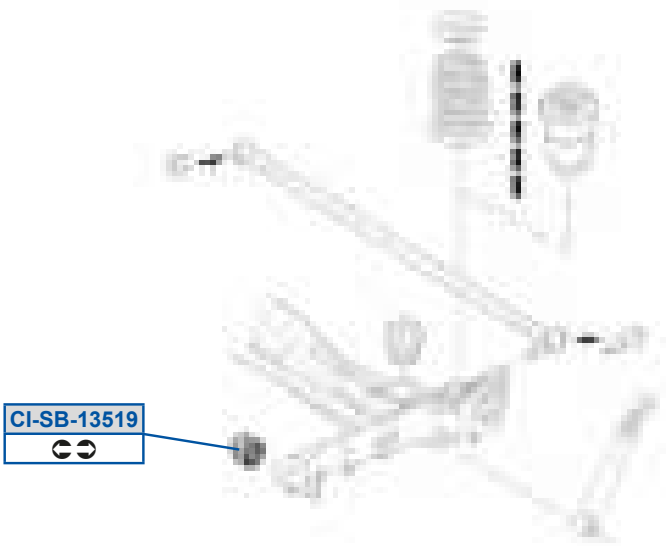

W7 Rz r t y W7 897>88E 5L1
X
QWc _]

MOOG

QV5Oi 5C9DG
AF89T7

QV5Sd5EA9D
AF8EEA3AF8EOC

QV5Zd5E>CG
C7FECD

QV5dP59AC9G
C8A8TB

QV5dP59ADEF
C7F8I A/40

QV5dP5EA9E
AC97nF/40 3AC98dG/40

QV5eQ5E>GF
AC97nF3AC97 F

QV5eQ5E>GG
AC98dG3AC98o7

QV5eQ5FB9F
AC98dG3AC98o7

QV5eQ5FB9G
AC97nF3AC97 F

] S[_ P 000r 1	8; 78F	] S[_ S t x	8B78G

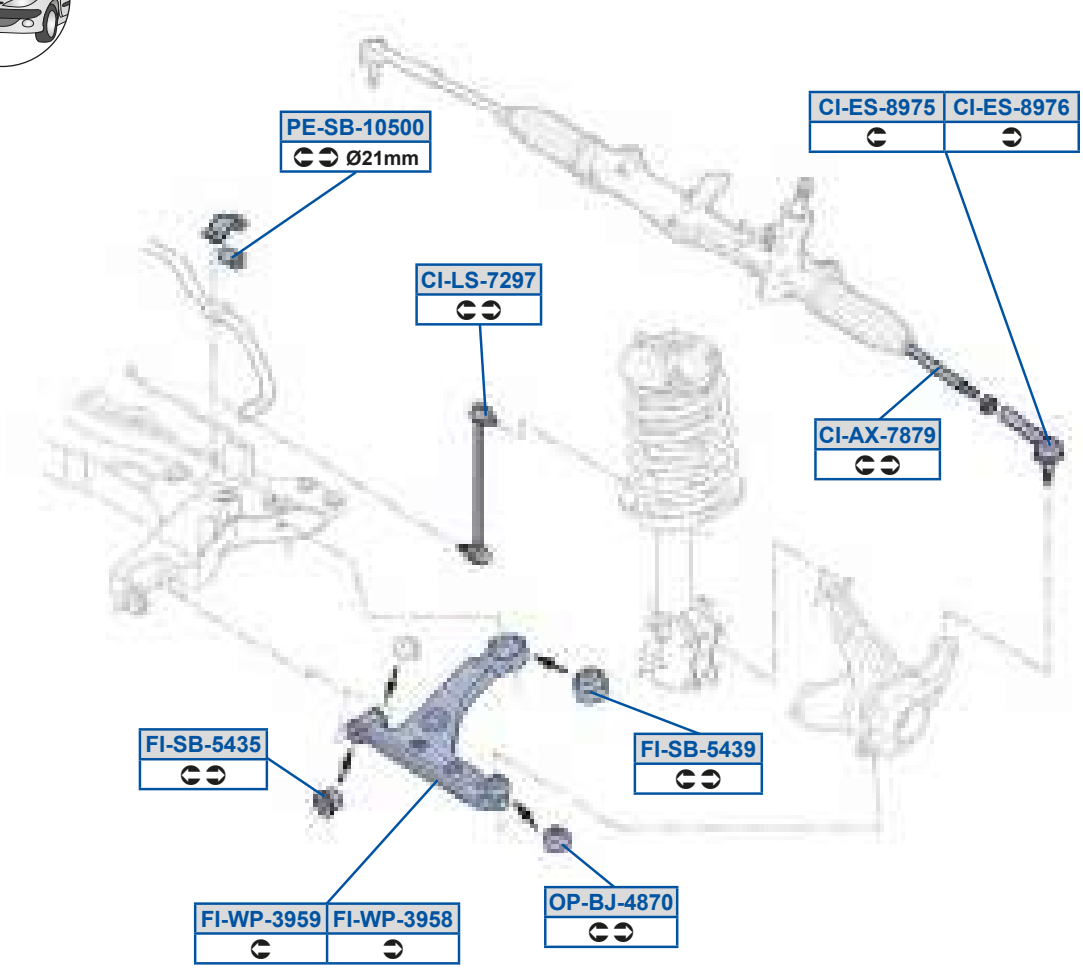

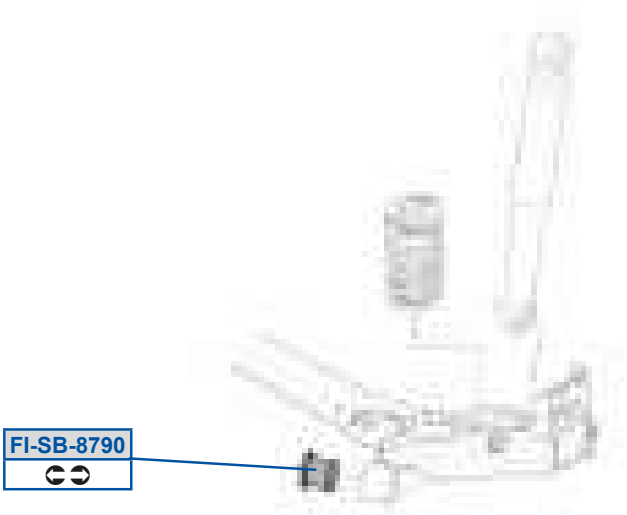

QVWOi 5EFEG
B778EE3B778YD

TVWh a5AGCG
AC97 A3AC97 B

QVWSd5FGEC
AF8EFB3AF8EFD

_ a5PX5BFE8
AC97DE3AC97FE

QVWSd5FGED
AF8EFC3AF8EFE

aS5dP598C88
C7GBSC

QVWZd5E>GE
C7FEDC3C7FEE7

TVWdP5CBAC
AC9AF73CCE7A9A9

TVWdP5CBAG
CCE77EC8

TVWdP5FEG8
C8A8UF

TVWh a5AGCF
AC98oD3AC98 C

K150059	K150152
→ RP 7244, Electric Ø38mm	RP 7245 → Depth 13mm
K150150	**K150123**
→ RP 7244 Ø36mm	→ RP 7083, Auto → RP 7727
K150151	**K150129**
RP 7245 → Depth 11mm	RP 7084 →, Auto RP 7728 →

PE-DS-6974	PE-DS-6973
PE-DS-6976	**PE-DS-6975**

CI-ES-3848

CI-AX-0537
→RP 7244

CI-LS-1727
→ 09/96
10/96 →

PE-SB-9970

PE-ES-0664
→RP 7244

PE-ES-0780
→RP 7084

CI-SB-6698
Ø19mm Inner

CI-SB-6697
Ø21mm Inner

PE-SB-6729
Ø19mm Outer

PE-SB-6730
Ø21mm Outer

PE-SB-1301

PE-DS-5041
✓ VTR, VTL, VTS

CI-ES-1782
→RP 7244
→RP 7084

CI-ES-0011
OE 53633

CI-SB-1310

PE-ES-5723	PE-ES-5724

PE-SB-1310

PE-BJ-3356

PE-BJ-3356

CI-SB-1302

PE-WP-6980	PE-WP-6979
✗ 1.4 & 1.6 VTR, VTL, VTS	✗ 1.4 & 1.6 VTR, VTL, VTS

PE-WP-0626	PE-WP-0627
✓ 1.4 & 1.6 VTR, VTL, VTS	✓ 1.4 & 1.6 VTR, VTL, VTS

PE-SB-4546

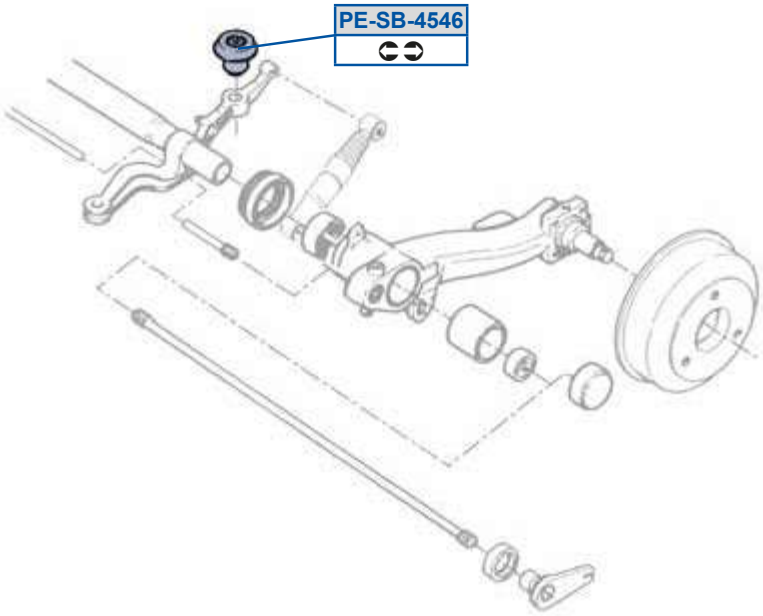

QW0i 58CAE
AF8EAB

QW0dP5DDGF
C7GBCD

aS5Rd5C8B9
C7FEB73GD8EEFAD

aS5Sd5CE>B
AF8EA83AF8EB9

QW0Sd58899
AF8EAD

Y9C88CG
B7DDA93B7DDAB

aS5Rd5DGEA
AF89FD

aS5dP59A89
AC9AC83GD87DBEB

QW0Sd59EF>
AF8EAC

Y9C89>A
B78F0D3B7DDAD

aS5Rd5DGEB
AF89FC

aS5dP59A98
AC9AC73GCD7AA7F

QW0Sd5AFBF
AF8EBE

Y9C89>G
B7DDC73GBC87EDEF7

aS5Rd5DGEC
AF89FF

aS5dP5BCBD
C8A8DA

QW0Zd59E>E
AF89073GC7DG89G

Y9C89C8
B7DDBD3GBC87EDEF7

aS5Rd5DGED
AF89FE

aS5dP5DE>G
C7GBCG

QW0dP59A8>
AC9AC93AC9ADB

Y9C89C9
B7DDBG3GBC87EDEF7

aS5Sd58DDB
AF8EAA3GBE877GBDC

aS5dP5DEA8
C7GBD7

QW0dP59A98
AC9ACA3GD7C7AAF

Y9C89C>
B7DDBF3GBC87EDEF7

aS5Sd58EF8
AF8EA9

aS5dP5GGE8
C7AF8C

QW0dP5DDGE
C7GBCE

aS5PX5AACD
8D8BBAG9F73ADB7AD

aS5Sd5CE>A
AF8EA73AF8EB8

aS5h a58D>D
AC97F73AC97G9

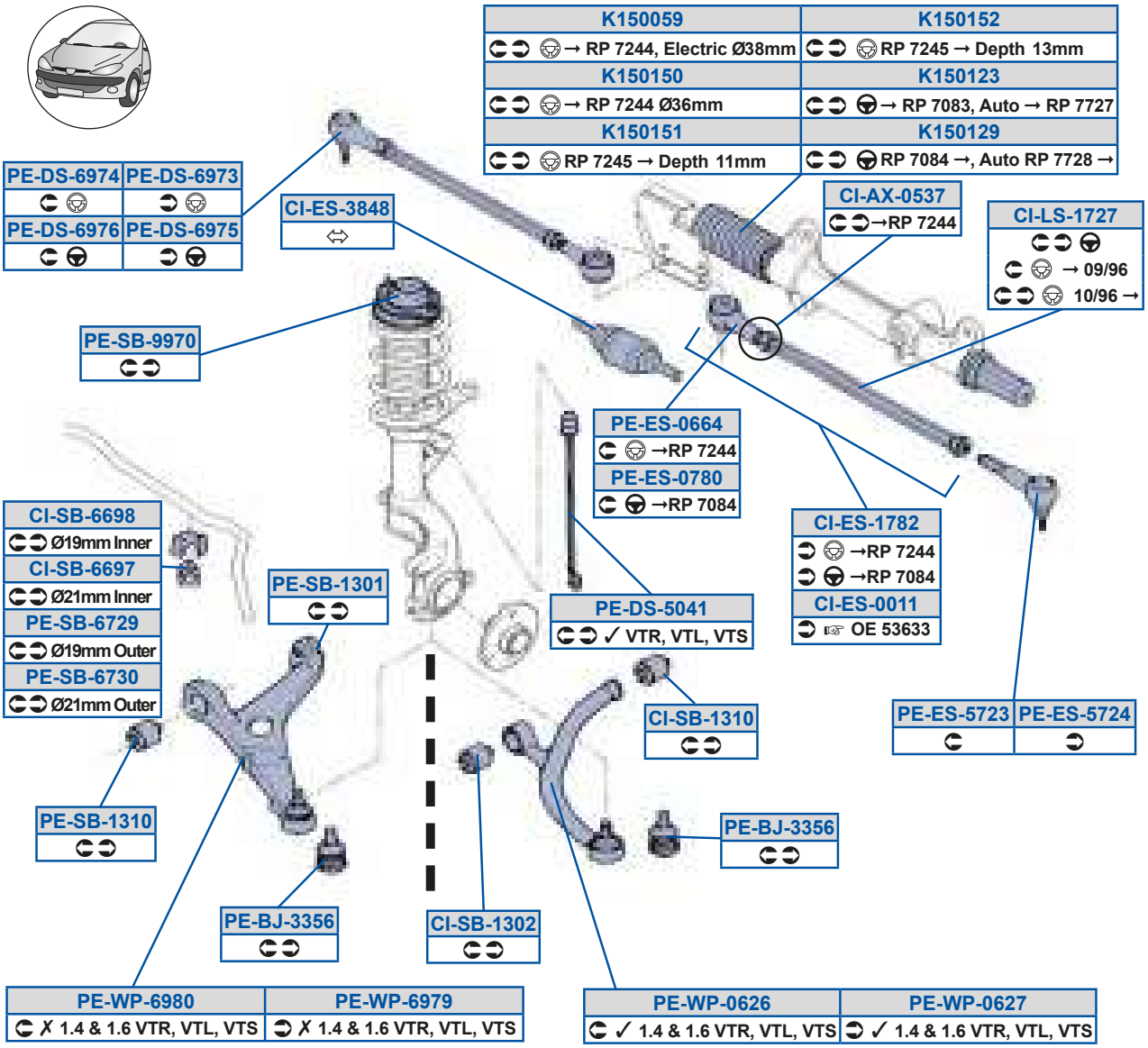
K150059
→ RP 7244, Electric Ø38mm
K150152
RP 7245 → Depth 13mm
K150150
→ RP 7244 Ø36mm
K150123
→ RP 7083, Auto → RP 7727
K150151
RP 7245 → Depth 11mm
K150129
RP 7084 →, Auto RP 7728 →
PE-DS-6974
PE-DS-6973
PE-DS-6976
PE-DS-6975
CI-ES-3848
CI-AX-0537
→RP 7244
CI-LS-1727
→ 09/96
10/96 →
PE-SB-9970
PE-ES-0664
→RP 7244
PE-ES-0780
→RP 7084
CI-ES-1782
→RP 7244
→RP 7084
CI-ES-0011
OE 53633
CI-SB-6698
Ø19mm Inner
CI-SB-6697
Ø21mm Inner
PE-SB-6729
Ø19mm Outer
PE-SB-6730
Ø21mm Outer
PE-SB-1301
PE-DS-5041
✓ VTR, VTL, VTS
CI-SB-1310
PE-ES-5723
PE-ES-5724
PE-SB-1310
PE-BJ-3356
PE-BJ-3356
CI-SB-1302
PE-WP-6980
✗ 1.4 & 1.6 VTR, VTL, VTS
PE-WP-6979
✗ 1.4 & 1.6 VTR, VTL, VTS
PE-WP-0626
✓ 1.4 & 1.6 VTR, VTL, VTS
PE-WP-0627
✓ 1.4 & 1.6 VTR, VTL, VTS

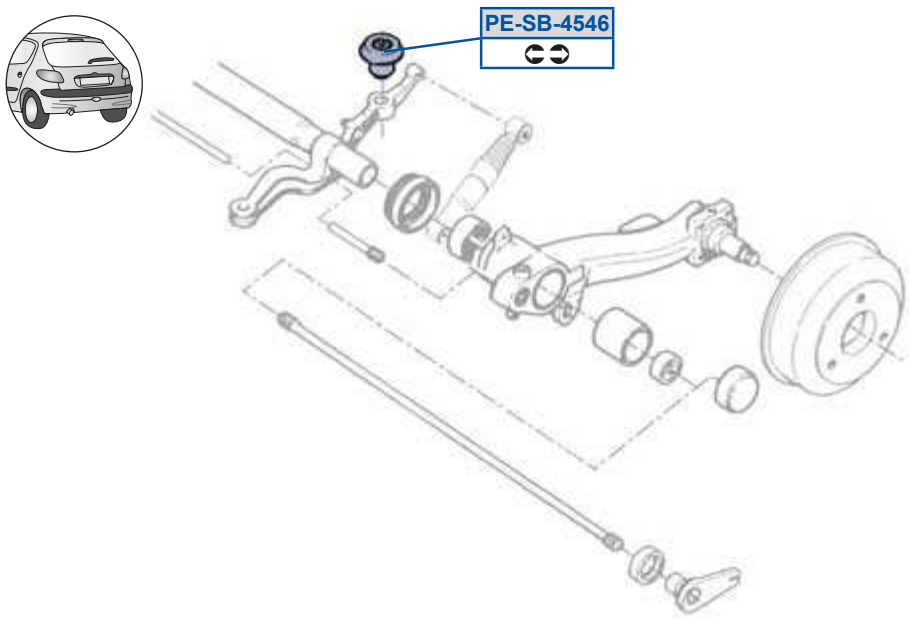
PE-SB-4546

aS5h a58D>E

AC97F83AC97GA

aS5h a5DGEG

AC97EG3GCDCFGEG

aS5h a5DGF8

AC97EF3GCDCFGEF

i O] eW Ó 91	8A7GA	897GF	i O] eW Ó ; 1	897GF	8B78A
i O] eW P xt Ó 91	8D7GC	897GF	i O] eW P xt Ó ; 1	897GF	8B78A

PE-AX-5749
M14x1.5 ✗ 2.0 Turbo, 2.1 TD, 3.0 v6, HDi
PE-AX-0645
M16x1.5 ✓ 2.0 Turbo, 2.1 TD, 3.0 v6, HDi

PE-LS-0595
Ø10mm →12/94
PE-DS-5041
Ø12mm 01/95→03/99 →RP 8151
PE-LS-0592
Ø12mm RP 8151→ 03/99→

CI-RK-15008	
✓ 1.6i	
CI-RK-15006	**CI-RK-15045**
✓ 1.8i, 1.9D, 1.9TD	✓ 1.8i, 1.9D, 1.9TD, 2.0 Turbo, 2.1TD
CI-RK-15017	
✓ 2.0, 2.0 Turbo, 2.1TD	

CI-SB-6694
✗ Activa, Estate Ø22mm
CI-SB-6695
✗ Activa, Estate Ø23mm

CI-SB-1307	CI-SB-1309

K150043
✓ 1.8i (XU7JP)
✓ 1.9D (XUD9A/SD)
✓ 1.9TD (XD9T/TE/TY)
K150049
✓ 1.6i
K150122
✗ 1.6i, ✗ 1.8i (XU7JP)
✗ 1.9D (XUD9A/SD)
✗ 1.9TD (XD9T/TE/TY)

PE-ES-5723	PE-ES-5724
M14x1.5	M14x1.5
PE-ES-1668	**PE-ES-1656**
M16x1.5	M16x1.5

CI-SB-1308

CI-TC-0160	CI-TC-0161

PE-BJ-3347

CI-RK-3569

CI-LS-0445

QW5Zd58BBC
C8EFAC

QW5dP59A8G
AC9AF9

aS5Oi 58DBC
AF89OG

aS5Zd58CG>
C7FEBA3C7FEBF

QW5c Y59C88D
GD8ADAGB

QW5dP5DDGB
GD7FG87B

aS5Oi 5CEBG
GD8ADAGB

aS5Zd58CGC
GD8BCBCE3GD8BCBCEF7

QW5c Y59C88F
GD8ADAGB

QW5dP5DDGC
GD7FG87D

aS5PX5AABE
ADB79F3ADB7AB

QW5c Y59C89E
GD8ADAGB

QW5eQ589D8
AC97FD3AC97Q8

aS5Rd5C8B9
C7FEB73GD8EEFAD

QW5c Y59C8BC
GD8ADAGB

QW5eQ589D9
AC98CF3AC98F8

aS5Sd59DCD
AF8EAF3AF8EBB

QW5c Y5ACDG
ECBE9B7F

Y9C88BA
B7DD983B7DD9G

aS5Sd59DDF
AF8EAE3AF8EBA

QW5dP59A8E
AC9AF8

Y9C88BG
GD89EAGE

aS5Sd5CE>A
AF8EA73AF8EB8

QW5dP59A8F
GD7FACE7

Y9C89>>
B7DD983B7DDA7

aS5Sd5CE>B
AF8EA83AF8EB9

i [0kA1	8C7FG 987GB	i [0kB1	8C7GB 98788
i [P xt 0kA1	8C7FG 8E7GB	i [P xt 0kB1	8C7GB 98788

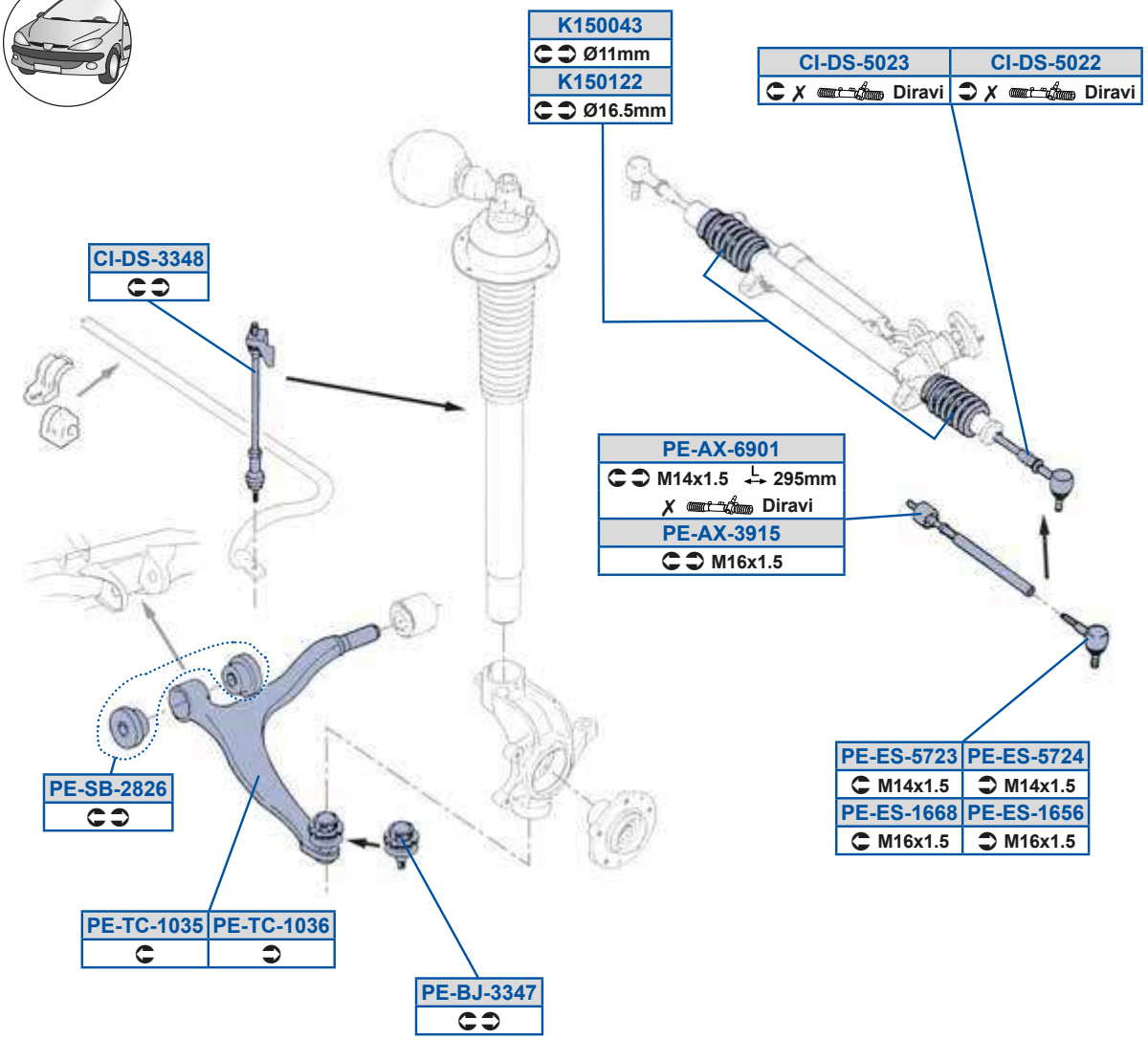

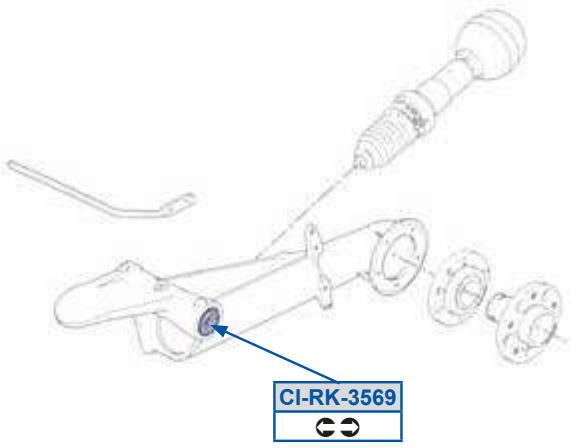

QW5Rd5AABF
C7FEA73C7FEA8

aS5PX5AABE
ADB79F3ADB7AB

QW5Rd5C8>>
AF89F7

aS5Sd59DCD
AF8EAF3AF8EBB

QW5Rd5C8>A
AF89F8

aS5Sd59DDF
AF8EAE3AF8EBA

QW5c Y5ACDG
ECBE9B7F

aS5Sd5CE>A
AF8EA73AF8EB8

Y9C88BA
B7DD983B7DD9G

aS5Sd5CE>B
AF8EA83AF8EB9

Y9C89>>
B7DD983B7DDA7

aS5dP5>F>D
AC9ABA

aS5Oi 5AG9C
AF89OD

aS5eQ598AC
AC97E73AC97YD

aS5Oi 5DG89
AF89GG3GD7A9BD7

aS5eQ598AD
AC97E83AC98UD

i dOc0 q 91	8B7GE 8B78C	i dOc0 P P w 7S t x	8C7GF 8F78C
i dOc0 P xt q ; 1	987GE 8A798	i dOc0 Q x q 81	897GF 8B78C
i dOc0 P P w 7Vt vÉut v	8C7GF 8A78C		

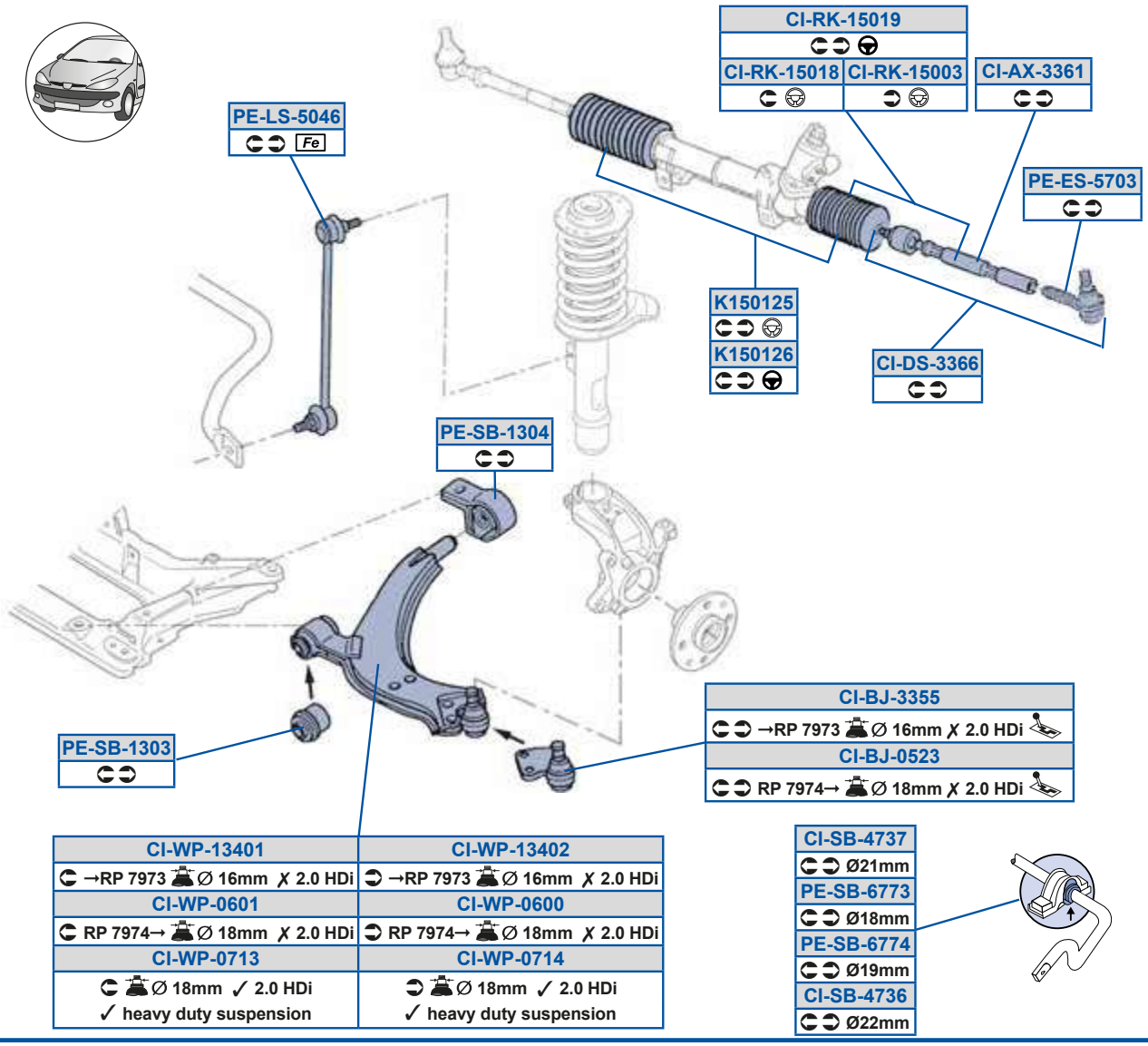

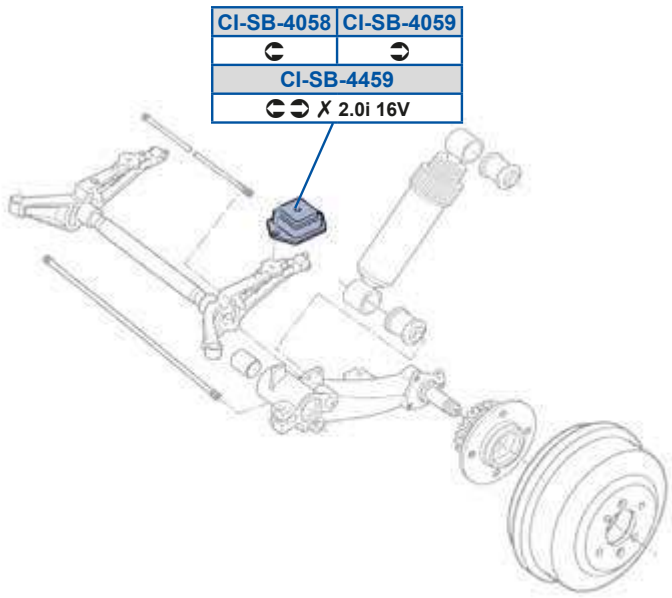

QW0i 5AAD9
AF89Q73FC7BF98B

QWdP5B8CG
C8A8E73GD8BEBEG

QWh a59AB89
AC97083AC9709

aS5dP5DEEA
C7GBDB3GD8CFEBC

QWPX58C>A
ADB7C73ADB7C8

QWdP5BBCG
C8A8E8

QWh a59AB8>
AC98E83AC98E9

aS5dP5DEEB
C7GBDD

QWPX5AACC
ADB7AF3ADB7AG

QWdP5BEAD
C7GBEE

Y9C89>C
B7DD8D3B7DD99

QWRd5AADD
AF89Q73GBE8777GDC

QWdP5BEAE
C7GBDC

Y9C89>D
B7DD8D3B7DD99

QWc Y59C88A
AF89Q73FC7BF98B

QWh a58D88
AC98773AC98SB

aS5Sd5CE8A
AF8E7G/40BAF8E87/40

QWc Y59C89F
AF89Q73FC7BF98B

QWh a58D89
AC97VB3AC97VC

aS5Zd5C8BD
C7FEAB3C7FEAG

QWc Y59C89G
AF89Q73FC7BF98B

QWh a58E9A
AC97VG3AC97XA

aS5dP59A8A
GD887BFA

QWdP5B8CF
C8A8DG3GD8BEBEF

QWh a58E9B
AC98SG3AC98TA

aS5dP59A8B
AC9AD93AC9AEC

i dOcO aWQOdd_ Q DF1	9; 7GG		

i r r a z t r

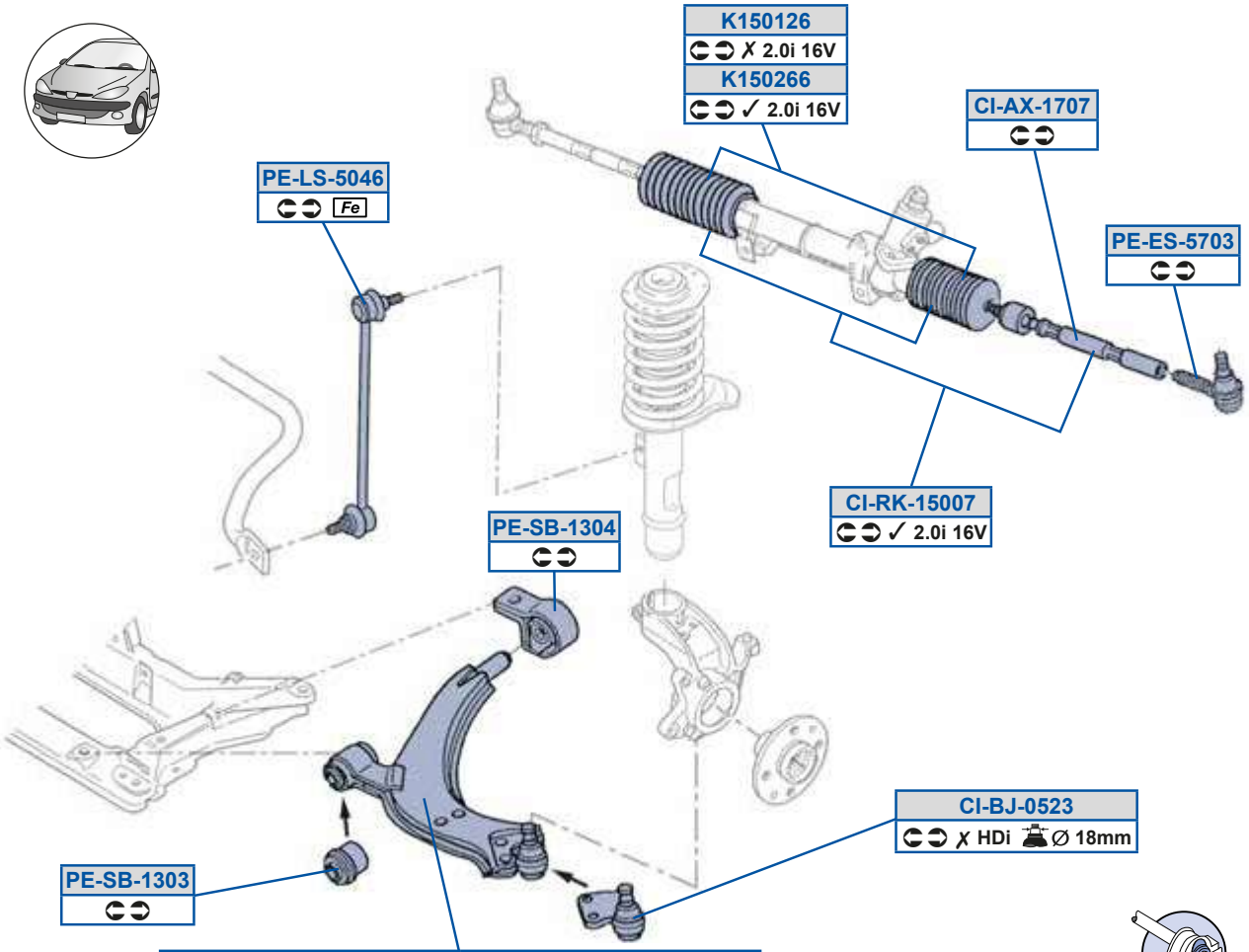

CI-WP-0713	CI-WP-0714
Ø 18mm ✓Hdi ✓Petrol →08/01	Ø 18mm ✓Hdi ✓Petrol →08/01
CI-WP-0601	**CI-WP-0600**
✗ Hdi ✓Petrol 09/01→	✗ Hdi ✓Petrol 09/01→

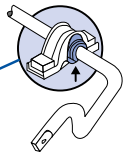

CI-SB-4737
Ø21mm Inner
CI-SB-4736
Ø22mm Outer

CI-SB-4058	CI-SB-4059
CI-SB-4459	
✗ 2.0i 16V	

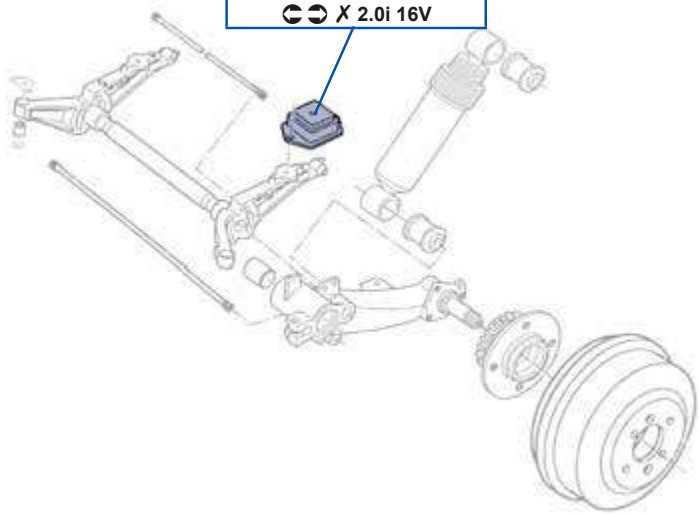

MOOG

QV5Oi 59E8E
AF8977773AF89QD

QV5h a58D88
AC98773AC98SB

aS5dP59A8A
GD887BFA

QV5PX58C>A
ADB7C73ADB7C8

QV5h a58D89
AC97VB3AC97VC

aS5dP59A8B
AC9AD93AC9AEC

QV5c Y59C88E
AF8977773AF89QD

QV5h a58E9A
AC97VG3AC97XA

QV5dP5B8CF
C8A8DG3GD8BEBEF

QV5h a58E9B
AC98SG3AC98TA

QV5dP5B8CG
C8A8E73GD8BEBEG

Y9C89>D
B7DD8D3B7DD99

QV5dP5BBCG
C8A8E8

Y9C8>DD
B7DD983B7DDBA

QV5dP5BEAD
C7GBEE

aS5Sd5CE8A
AF8E7G /403AF8E87 /40

QV5dP5BEAE
C7GBDC

aS5Zd5C8BD
C7FEAB3C7FEAG

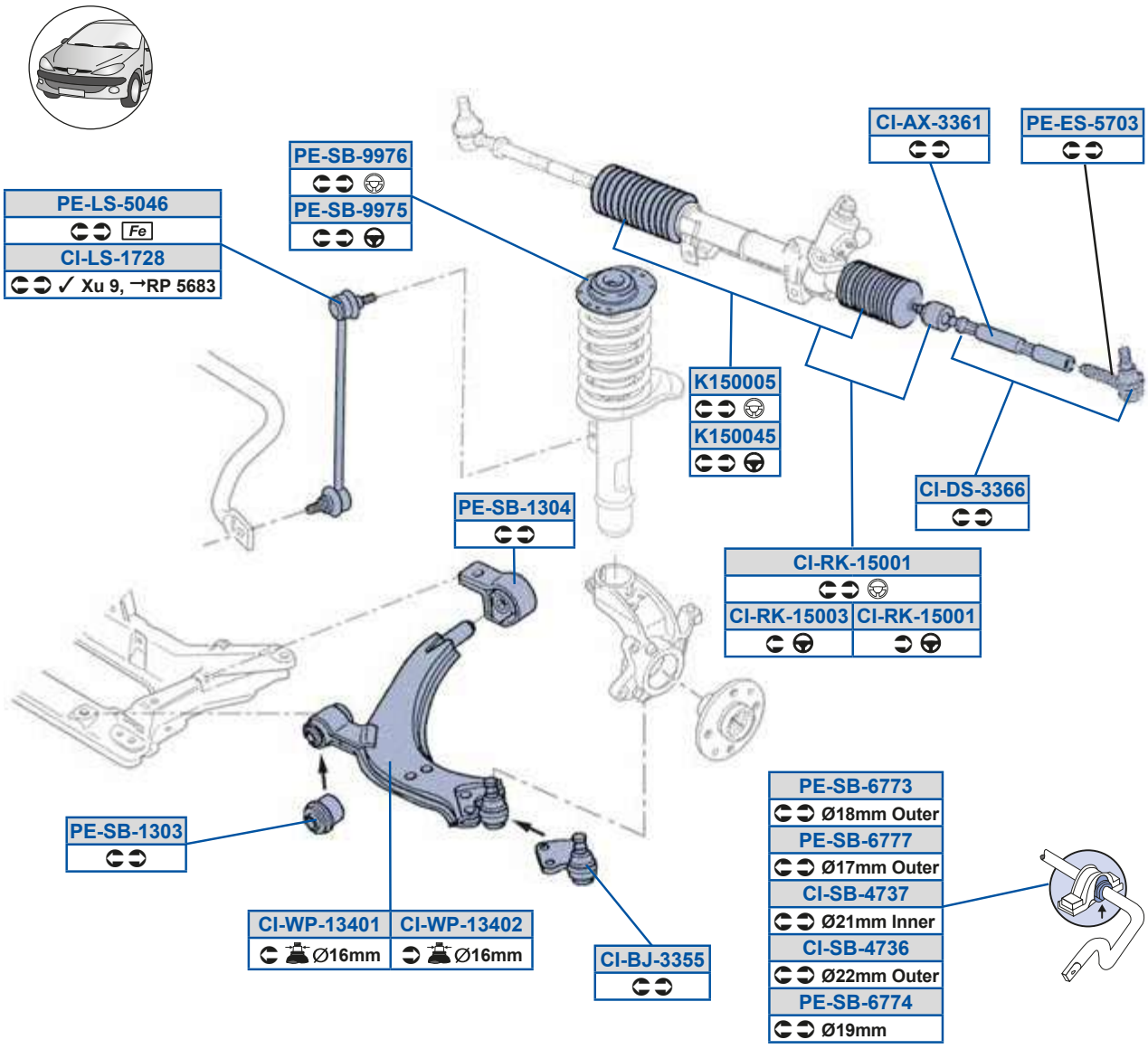
PE-LS-5046
Fe
CI-LS-1728
✓ Xu 9, →RP 5683
PE-SB-9976
PE-SB-9975
CI-AX-3361
PE-ES-5703
K150005
K150045
CI-DS-3366
PE-SB-1304
CI-RK-15001
CI-RK-15003
CI-RK-15001
PE-SB-1303
CI-WP-13401
Ø16mm
CI-WP-13402
Ø16mm
CI-BJ-3355
PE-SB-6773
Ø18mm Outer
PE-SB-6777
Ø17mm Outer
CI-SB-4737
Ø21mm Inner
CI-SB-4736
Ø22mm Outer
PE-SB-6774
Ø19mm

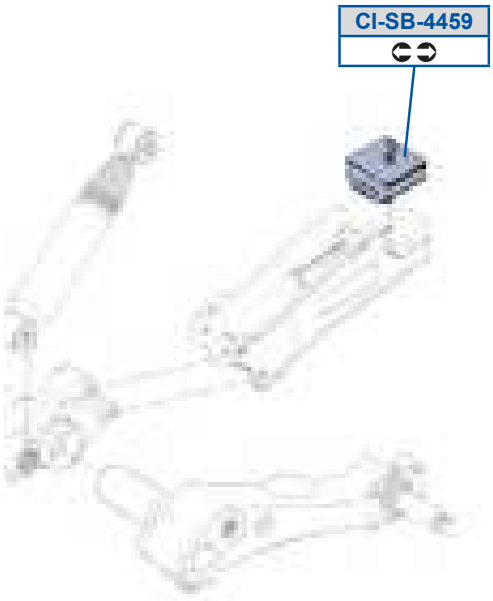
CI-SB-4459
CI-SB-4058
CI-SB-4059

QW0i 5AAD9
AF89Q73FC7BF98B

QWdP5BEAD
C7GBEE

aS5dP59A8A
GD887BFA

QWPX5AACC
ADB7AF3ADB7AG

QWdP5BEAE
C7GBDC

aS5dP59A8B
AC9AD93AC9AEC

QWRd5AADD
AF89Q73GBE8777GDC

QWh a59AB89
AC97083AC9709

aS5dP5DEEB
C7GBDD

QWc Y59C889
AF89Q73FC7BF98B

QWh a59AB8>
AC98E83AC98E9

aS5dP5GGEC
C7AC9A3C7AC9E

QWc Y59C88A
AF89Q73FC7BF98B

Y9C888C
B7DD8C3EG877A77EA

aS5dP5GGED
C7AC9A3C7AF99

QWdP5B8CF
C8A8DG3GD8BEBEF

Y9C88BC
G8C87FDB3G8C87G9A

QWdP5B8CG
C8A8E73GD8BEBEG

aS5Sd5CE8A
AF8E7G /4CBAF8E87 /4C

QWdP5BBCG
C8A8E8

aS5Zd5C8BD
C7FEAB3C7FEAG

9A88	9; 7E; 8C7FA	9A88 S t x	9; 7E; 8C7FA
9A98 S t x	8C7FA 8E78B	9A98 dt 0f 4i 1	8C7FA 8E78B

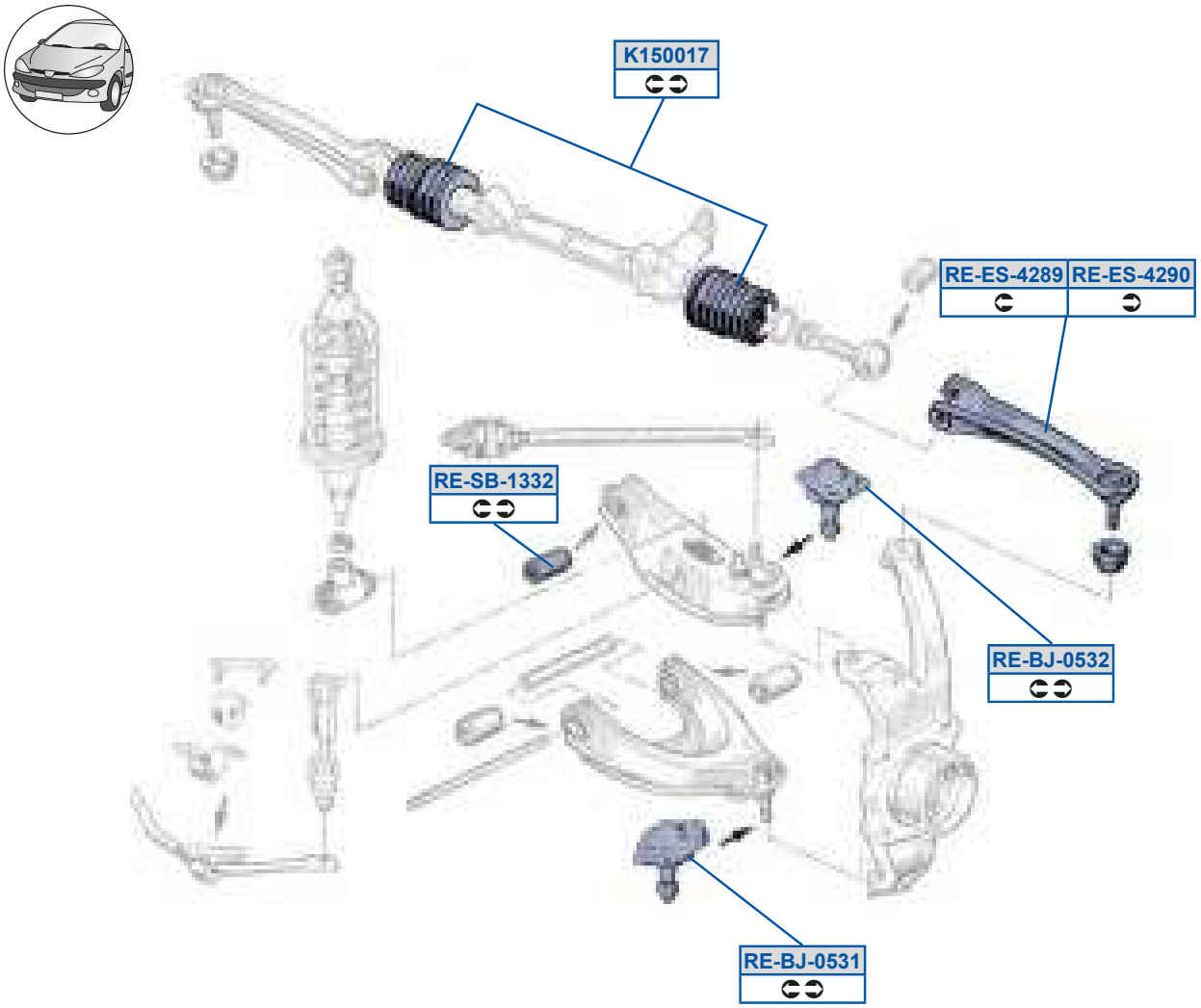

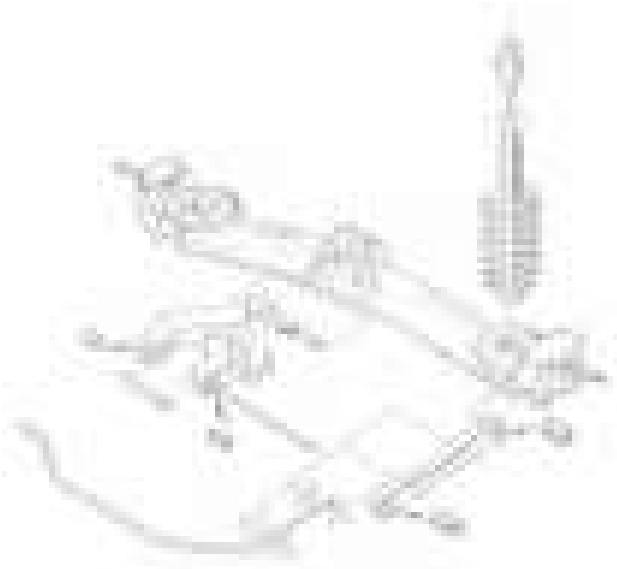

Y9C889E

c S5PX58CA9

EE78BD7FFD

c S5PX58CA>

EE78BD7FFC

c S5Sd5B>FG

EE77CE88E9

c S5Sd5B>G8

EE77CE88EA

c S5dP59AA>

EE7B778AE8

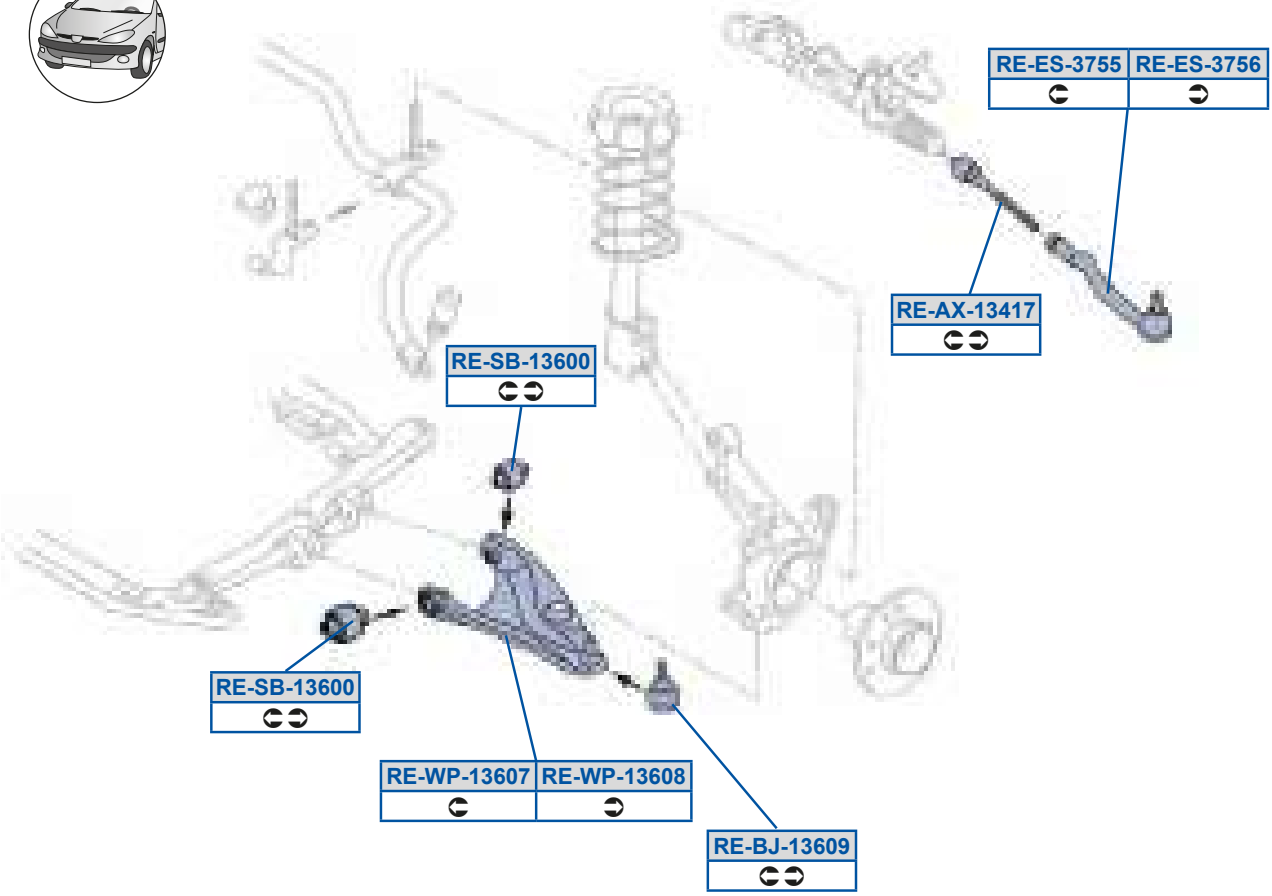
RE-ES-3755
RE-ES-3756
RE-AX-13417
RE-SB-13600
RE-SB-13600
RE-WP-13607
RE-WP-13608
RE-BJ-13609

c S5Oi 59AB9E
BFC98A8E9n

c S5PX59AD8G
CBC77BC9Gn /40

c S5Sd5AECC
BFC979FDEn3D778CBED87

c S5Sd5AECD
BFC977B87n3D778CBED88

c S5dP59AD88
CBC77BC9Gn /40

c S5h a59AD8E
CBC7879GBn3CBC788E9En

c S5h a59AD8F
CBC77BC9Gn3CBC77E87Dn

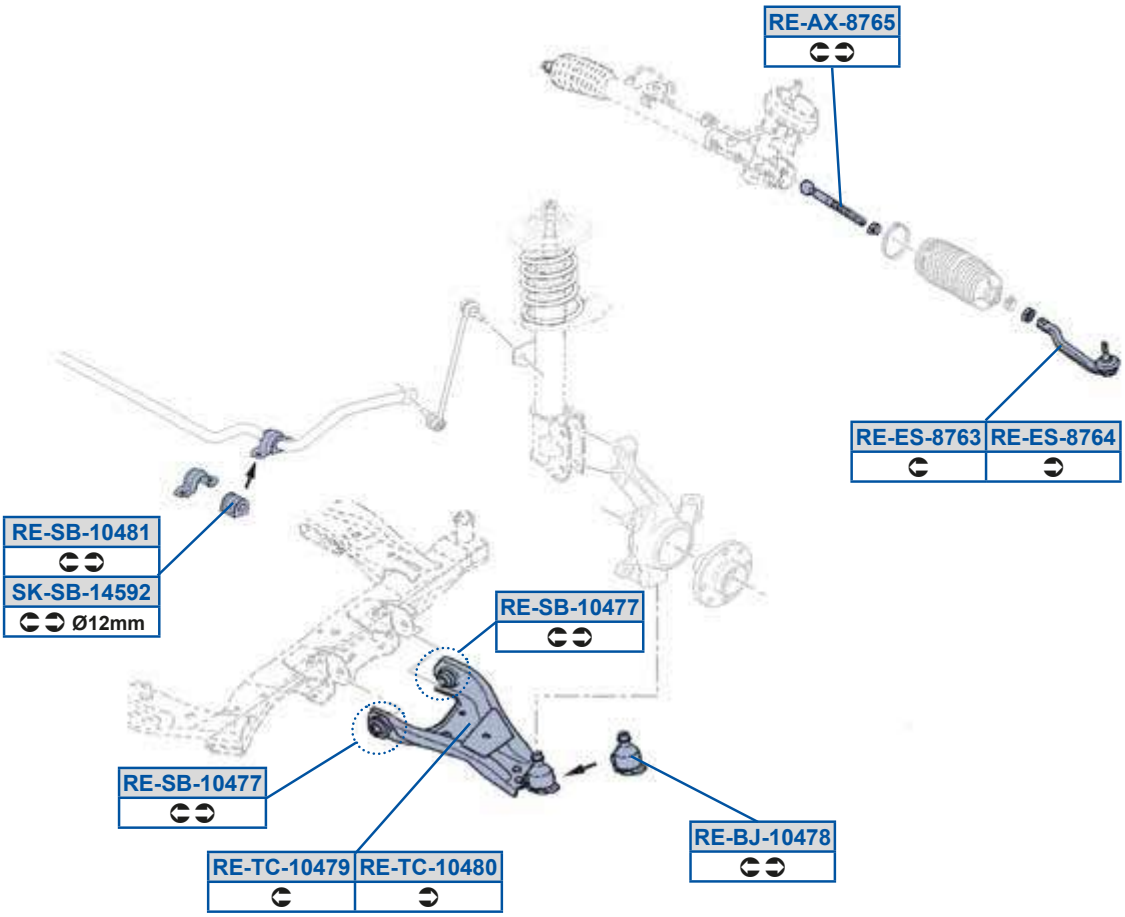
RE-AX-8765
RE-ES-8763
RE-ES-8764
RE-SB-10481
SK-SB-14592
Ø12mm
RE-SB-10477
RE-SB-10477
RE-TC-10479
RE-TC-10480
RE-BJ-10478

✗ 4x4

✓ 4x4

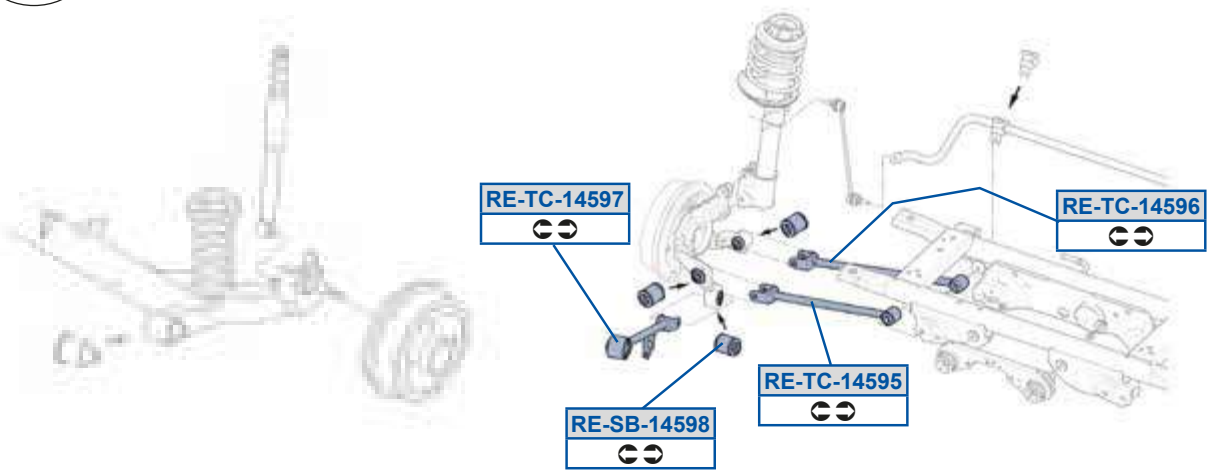
RE-TC-14597
RE-TC-14596
RE-TC-14595
RE-SB-14598

c S5Oi 5FEDC
F97887FAC7

c S5PX598BEF
B78D79A7Fn

c S5Sd5FEDA
F97887FAAG

c S5Sd5FEDB
F97887FAA9

c S5dP598BEE
CBC77DCB9n /40

c S5dP598BF9
F977FC9CC7

c S5dP59BCGF
F977FAG898

c S5eQ598BEG
CBC788DGEn3CBC78DEBDn

c S5eQ598BF8
CBC7778AFn3CBC778CACn

c S5eQ59BCGC
F977FAG89B

c S5eQ59BCGD
F977FAG88G

c S5eQ59BCGE
CC897GAB8n

dY5dP59BCG>
CD9A77888n

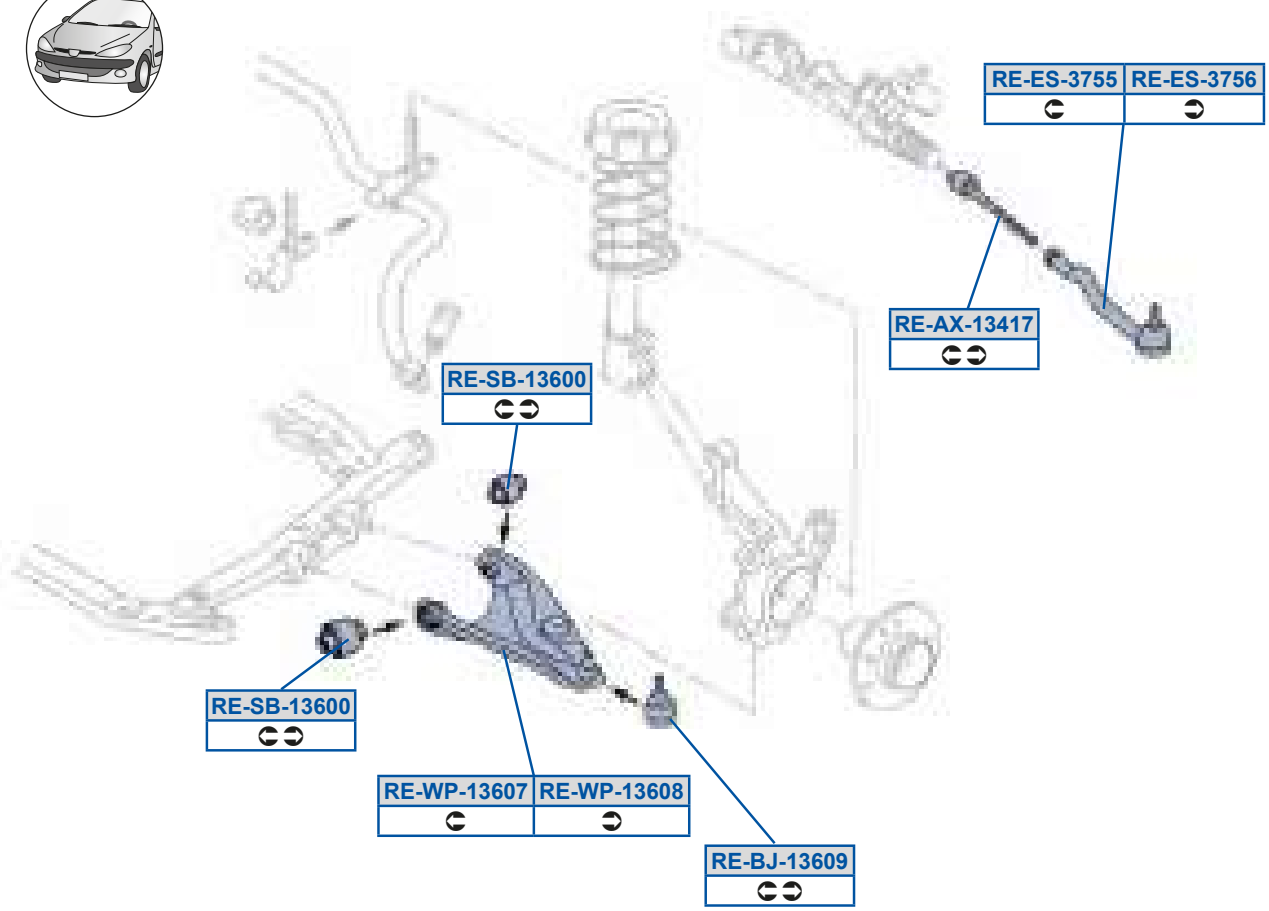
RE-ES-3755
RE-ES-3756
RE-AX-13417
RE-SB-13600
RE-SB-13600
RE-WP-13607
RE-WP-13608
RE-BJ-13609

c S5Oi 59AB9E
BFC98A8E9n

c S5PX59AD8G
CBC77BC9Gn /40

c S5Sd5AECC
BFC979FDEn3D778CBED87

c S5Sd5AECD
BFC977B87n3D778CBED88

c S5dP59AD88
CBC77BC9Gn /40

c S5h a59AD8E
CBC7879GBn3CBC788E9En

c S5h a59AD8F
CBC77BC9Gn3CBC77E87Dn

Z_UO] 0Zdr 1	8G78B	Z_UO] Si acSdd 0Tdr 1	8A78G
Z_UO] [Qg 0Ydr 1	8; 78E	Z_UO] aé/ 0f dr 1	8A78F

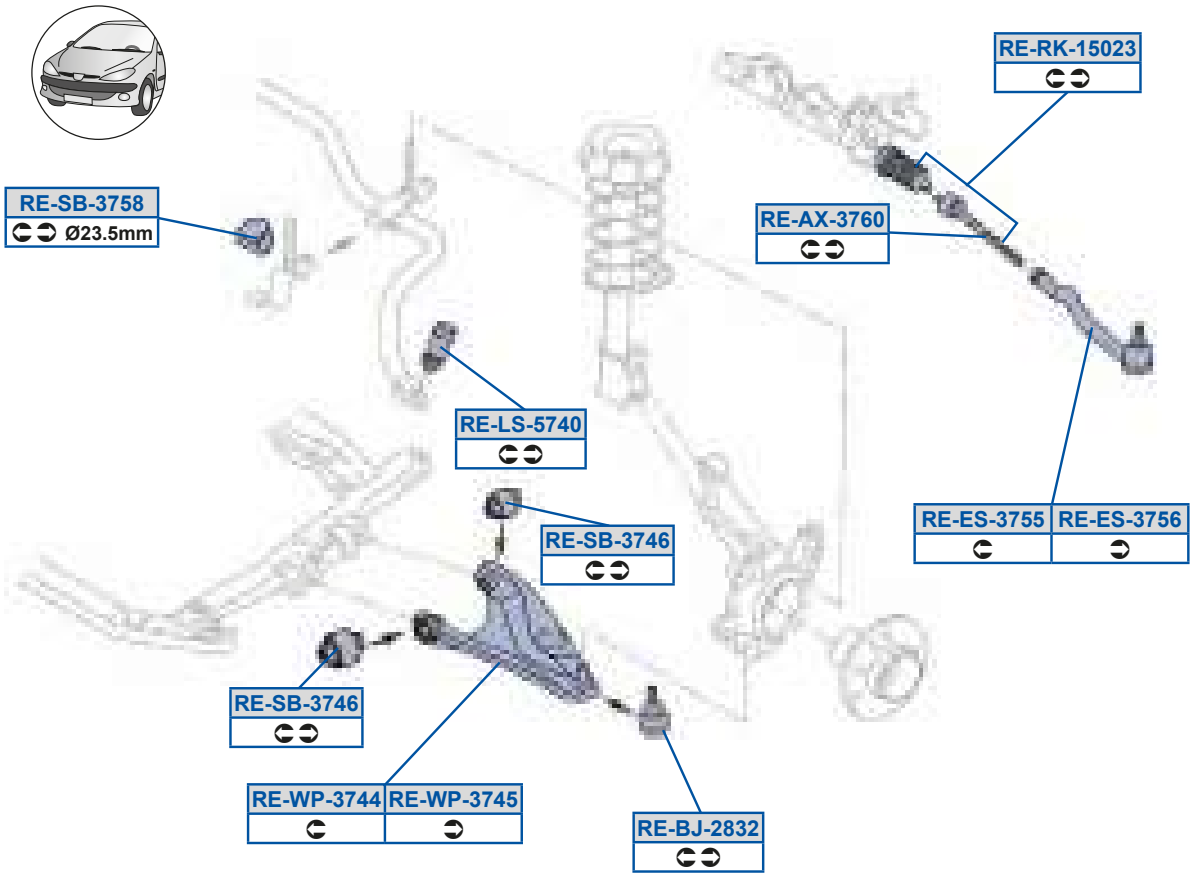

c S5Oi 5AED8
D778CBED7D3D778CC7BB8

c S5dP5B9G9
D778CBGGFF3D778CBGGFG

c S5PX5>FA>
B78D7BEGAn3F9779GFBCCo

c S5h a5AEBB
CBC788AD9n3CBC78G9GBn

c S5Sd5AECC
BFC979FDEn3D778CBED87

c S5h a5AEBC
CBC77B9DGn3D778CBEC8G

c S5Sd5AECD
BFC977B87n3D778CBED88

c S5Zd5CEB8
D778CBE8AF3F9779EEGD7

c S5cY59C8>A
D778CBED7D3D778CC7BB8

c S5dP5AEBD
D7B77799BC

c S5dP5AECF
D778CBE8B7

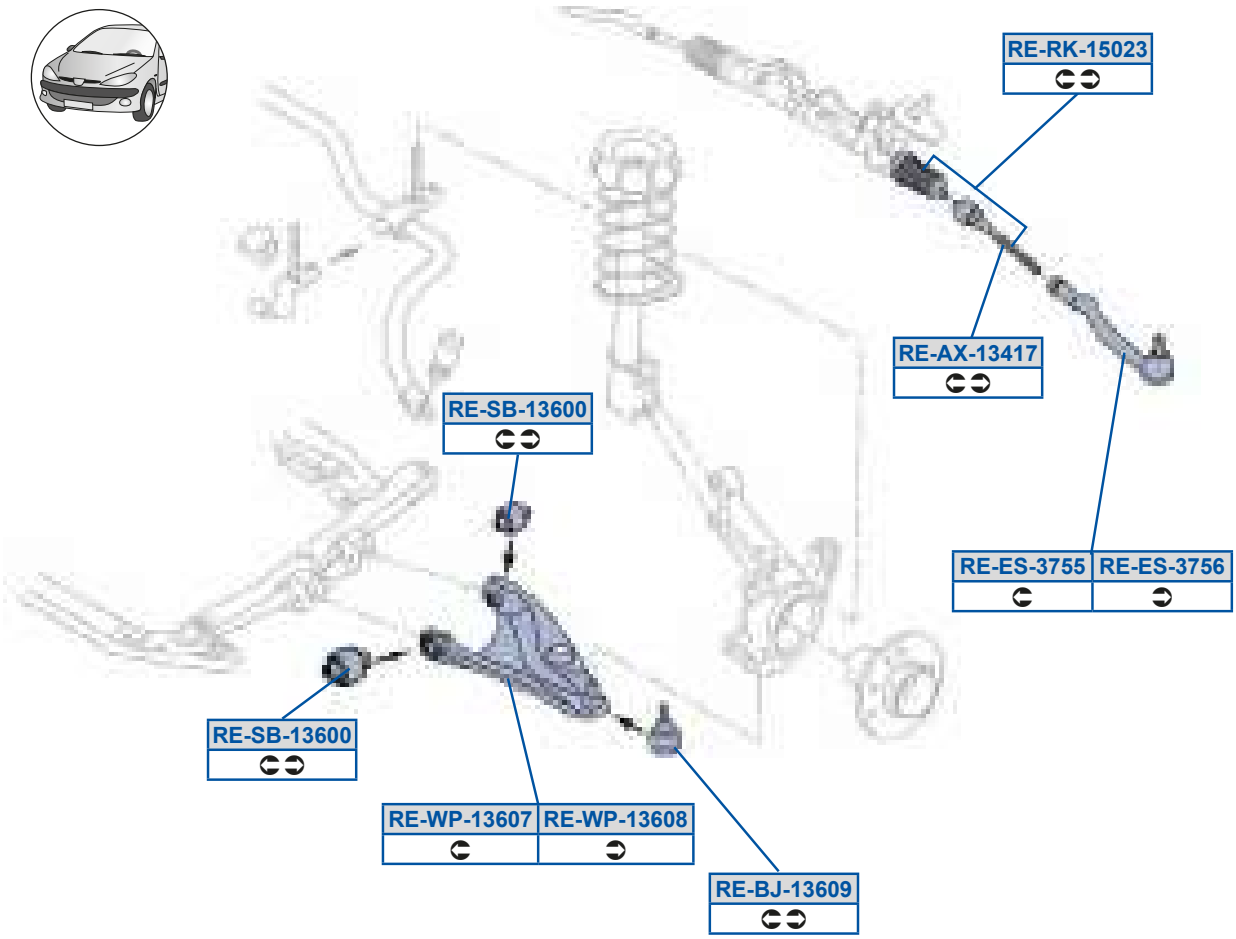
RE-RK-15023
RE-AX-13417
RE-SB-13600
RE-ES-3755
RE-ES-3756
RE-SB-13600
RE-WP-13607
RE-WP-13608
RE-BJ-13609

RE-SB-4191

c S5Oi 59AB9E
BFC98A8E9n

c S5PX59AD8G
CBC77BC9Gn /40

c S5Sd5AECC
BFC979FDEn3D778CBED87

c S5Sd5AECD
BFC977B87n3D778CBED88

c S5cY59C8>A
D778CBED7D3D778CC7BB8

c S5dP59AD88
CBC77BC9Gn /40

c S5dP5B9G9
D778CBGGFF3D778CBGGFG

c S5h a59AD8E
CBC7879GBn3CBC788E9En

c S5h a59AD8F
CBC77BC9Gn3CBC77E87Dn

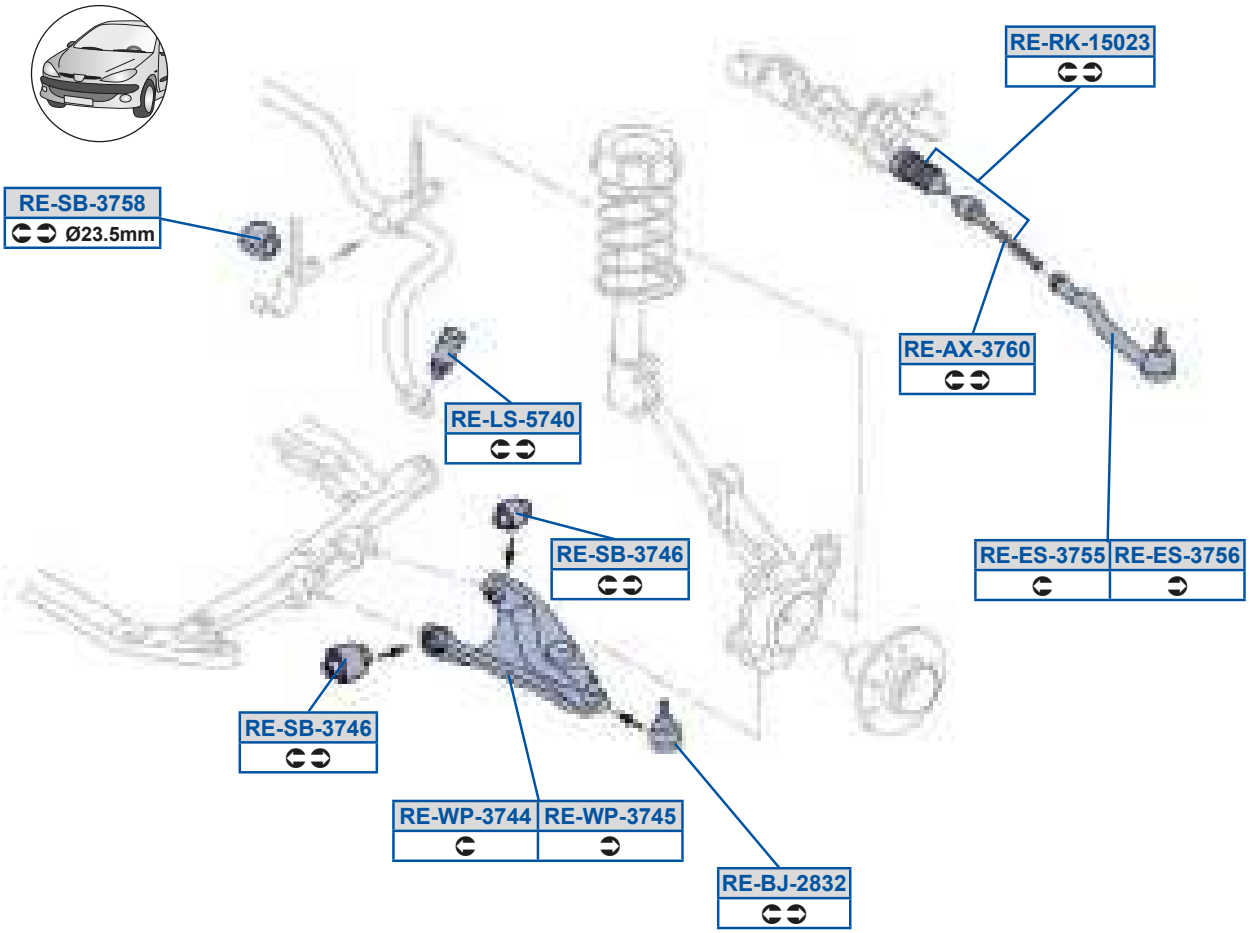
RE-RK-15023
RE-SB-3758
Ø23.5mm
RE-AX-3760
RE-LS-5740
RE-SB-3746
RE-ES-3755
RE-ES-3756
RE-SB-3746
RE-WP-3744
RE-WP-3745
RE-BJ-2832

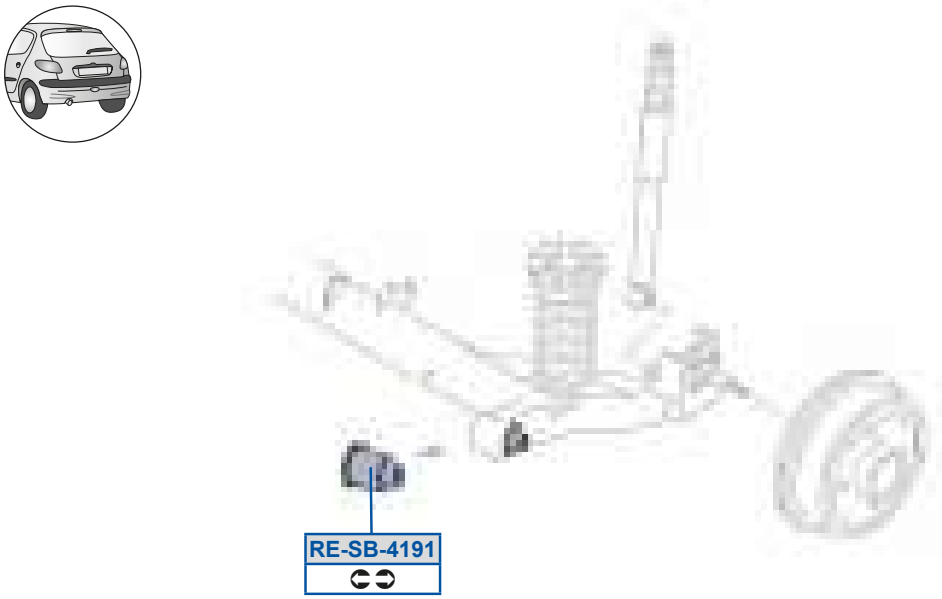
RE-SB-4191

c S5Oi 5AED8
D778CBED7D3D778CC7BB8

c S5dP5B9G9
D778CBGGFF3D778CBGGFG

c S5PX5>FA>
B78D7BEGAn3F9779GFBCCo

c S5h a5AEBB
CBC788AD9n3CBC78G9GBn

c S5Sd5AECC
BFC979FDEn3D778CBED87

c S5h a5AEBC
CBC77B9DGn3D778CBEC8G

c S5Sd5AECD
BFC977B87n3D778CBED88

c S5Zd5CEB8
D778CBE8AF3F9779EEGD7

c S5cY59C8>A
D778CBED7D3D778CC7BB8

c S5dP5AEBD
D7B77799BC

c S5dP5AECF
D778CBE8B7

d0] RSc_ WW	9979;		

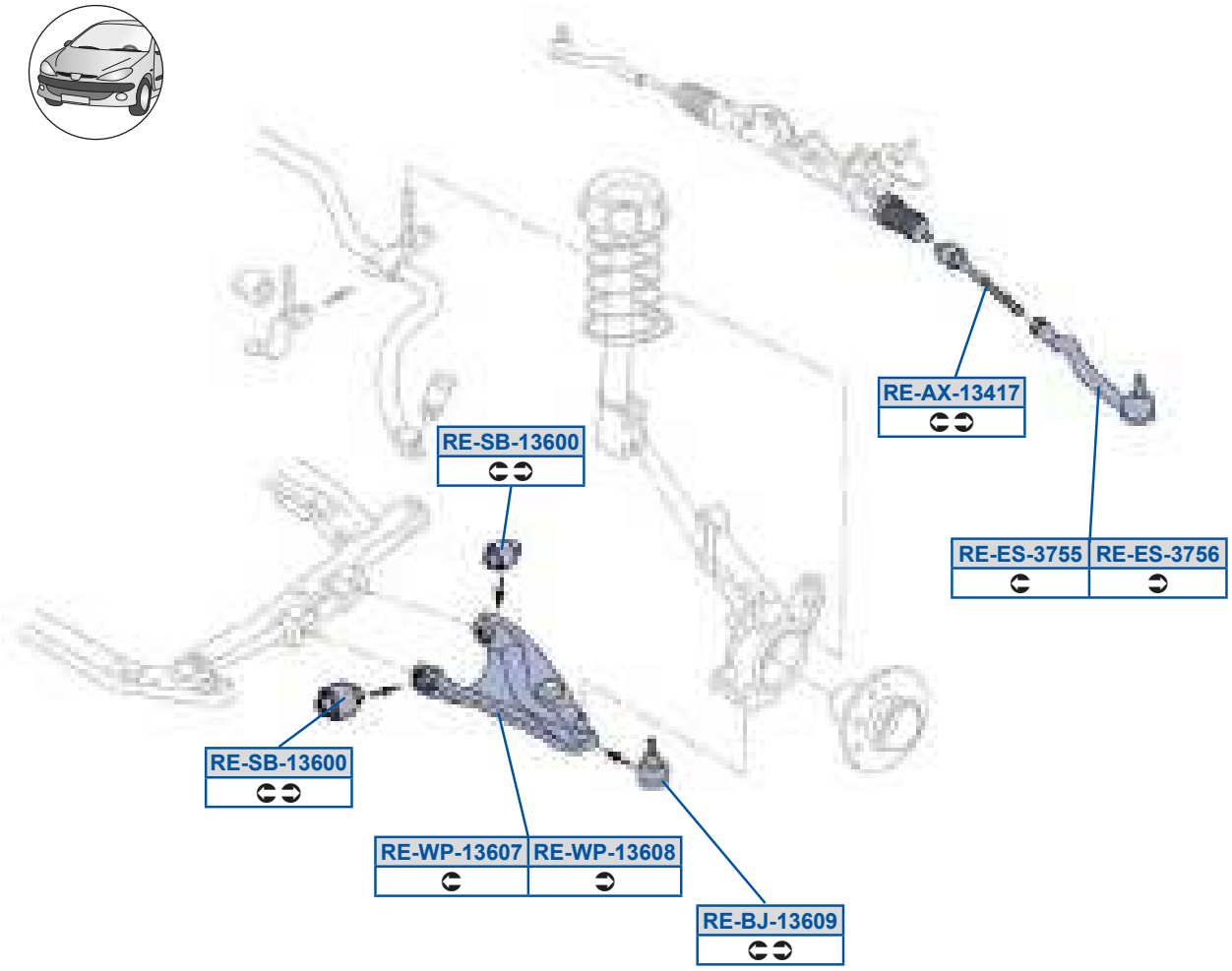

c S5Oi 59AB9E
BFC98A8E9n

c S5PX59AD8G
CBC77BC9Gn /40

c S5Sd5AECC
BFC979FDEn3D778CBED87

c S5Sd5AECD
BFC977B87n3D778CBED88

c S5dP59AD88
CBC77BC9Gn /40

c S5dP5B9G9
D778CBGGFF3D778CBGGFG

c S5h a59AD8E
CBC7879GBn3CBC788E9En

c S5h a59AD8F
CBC77BC9Gn3CBC77E87Dn

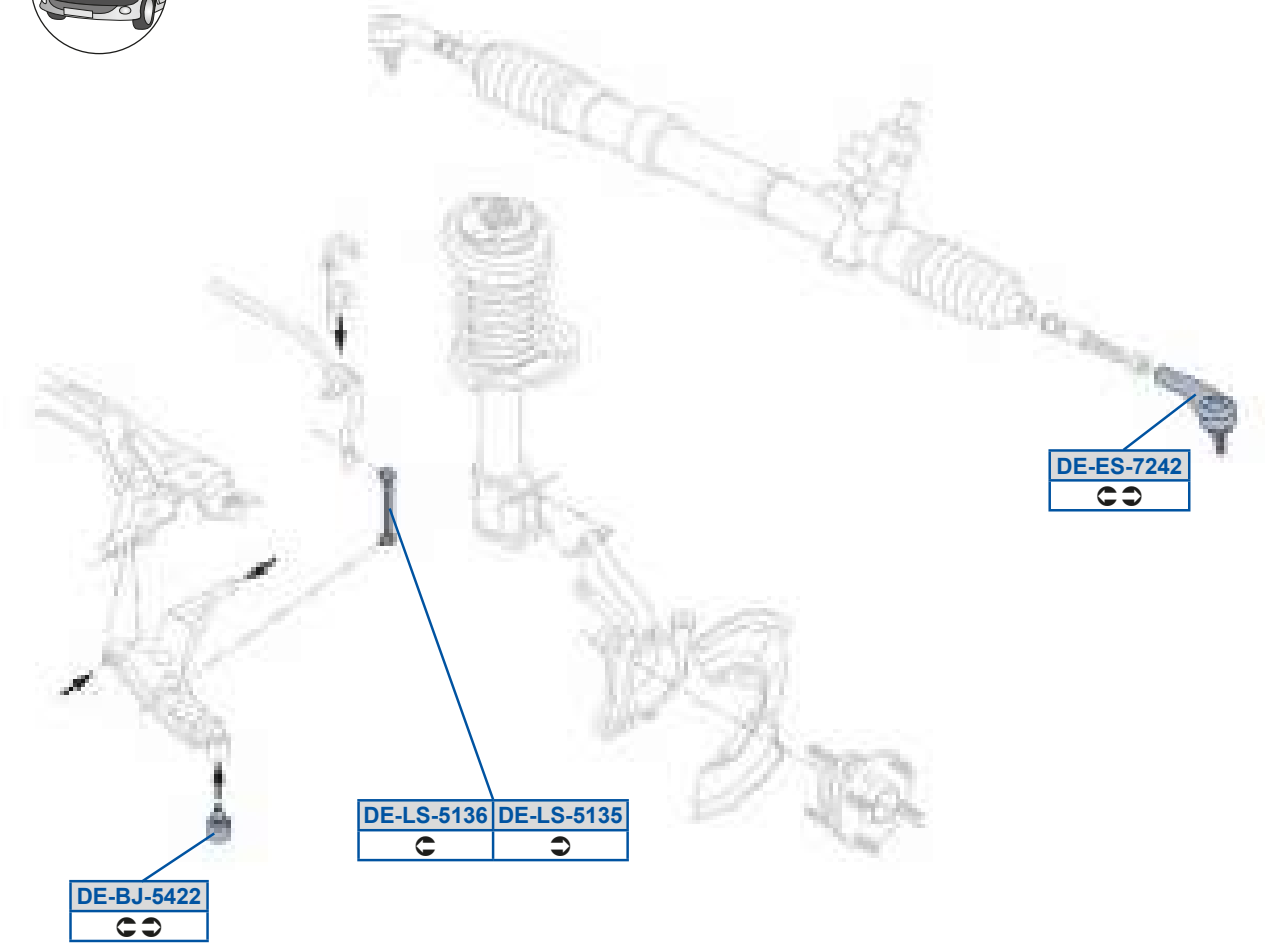
DE-ES-7242
DE-LS-5136
DE-LS-5135
DE-BJ-5422

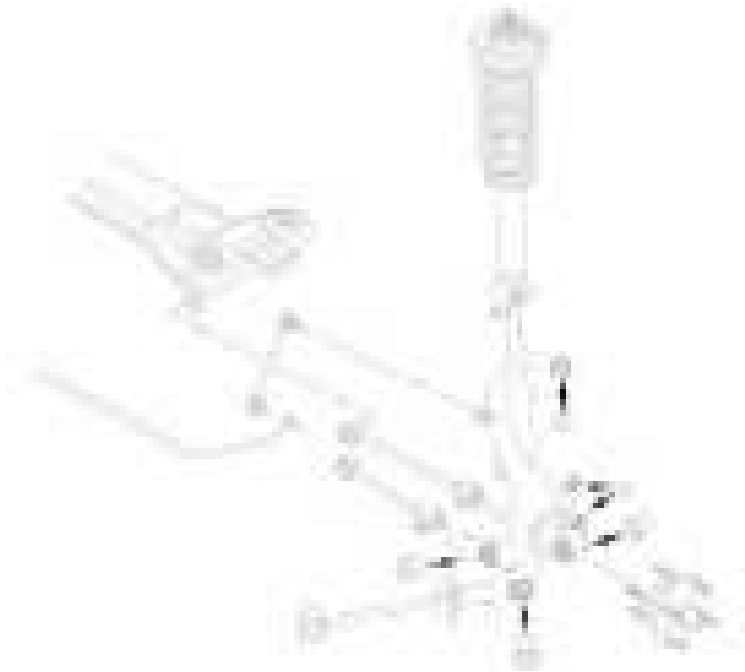

RS5PX5CB>>

G988GFA73GDA9FBAE

RS5Sd5E>B>

C979D93GAEB7E87

RS5Zd5C9AC

GD99CFCG

RS5Zd5C9AD

GD99CFCF

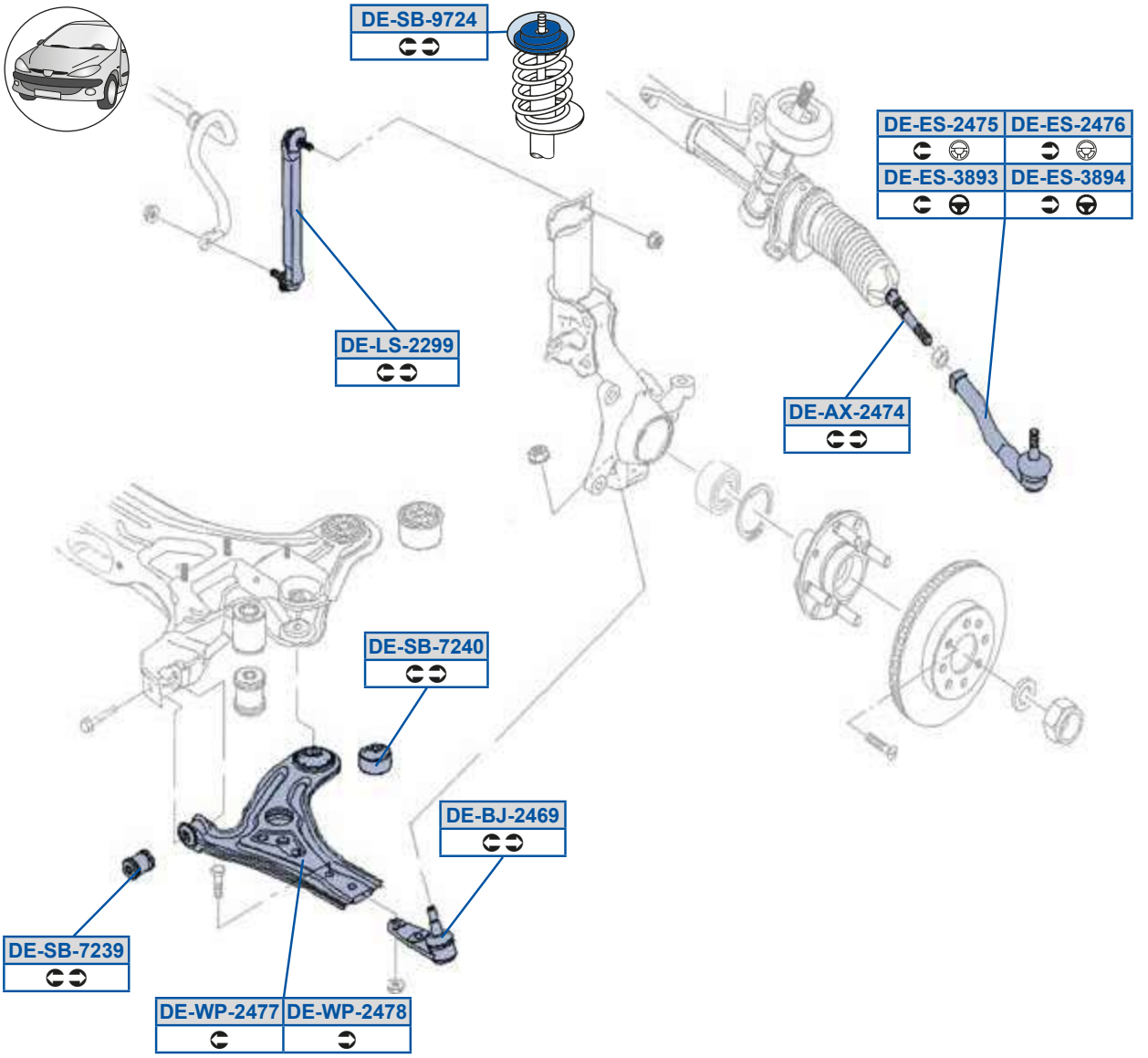
DE-SB-9724
DE-ES-2475
DE-ES-2476
DE-ES-3893
DE-ES-3894
DE-LS-2299
DE-AX-2474
DE-SB-7240
DE-BJ-2469
DE-SB-7239
DE-WP-2477
DE-WP-2478

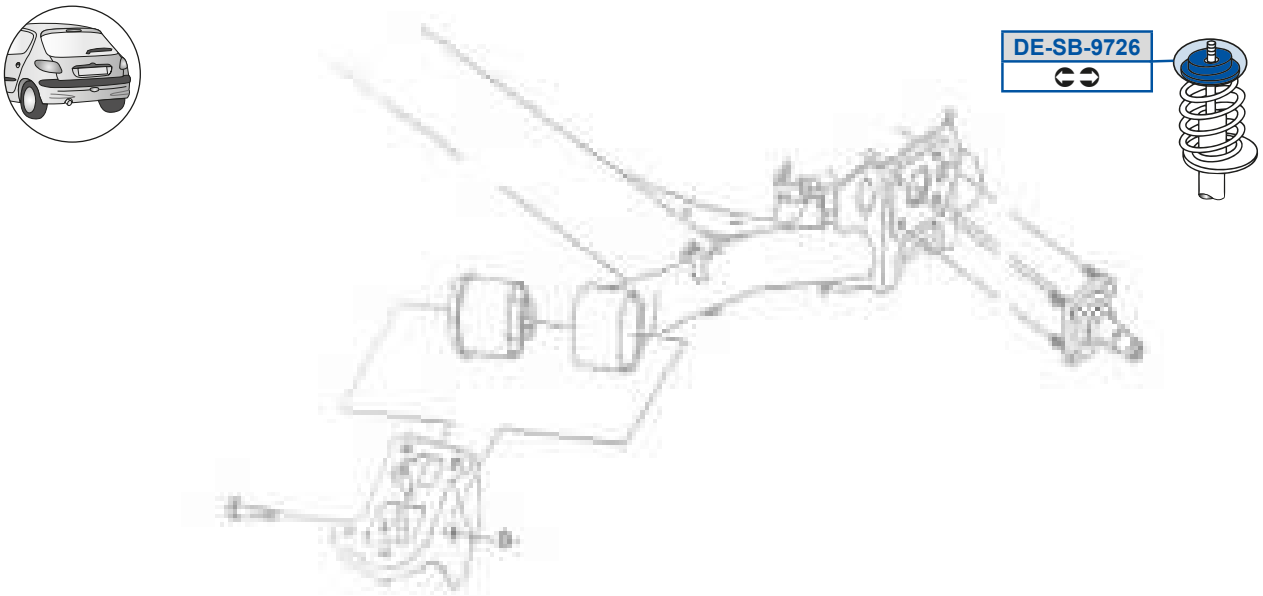
DE-SB-9726

RS5Oi 5>BEB
GDCACA77

RS5PX5>BDG
GDCAC7FG

RS5Sd5>BEC
GAEB7D993GAEB7E99

RS5Sd5>BED
GAEB7D9A3GAEB7E9A

RS5Sd5AFGA
GAEB7E99

RS5Sd5AFGB
GAEB7E9A

RS5Zd5>>GG
GD9ECEGF3GDAG8FEC

RS5dP5E>AG
GDCAC7F8 /403GDCAC7F9 /40

RS5dP5E>B8
GDCAC7F8 /403GDCAC7F9 /40

RS5dP5GE>B
GDCAC7873GDCAC788

RS5dP5GE>D
GDBCDE8A3GDBCDE8C

RS5h a5>BEE
GDCAC7F83GDFE7BDC

RS5h a5>BEF
GDCAC7F93GDFE7BDD

ROSh _ _

Y_c0] R_ 0YX1	897GG	Y_c0] R_ Qtu é 0YX1	8; 7GG
[f dd_ 0TX1	8E7GF		

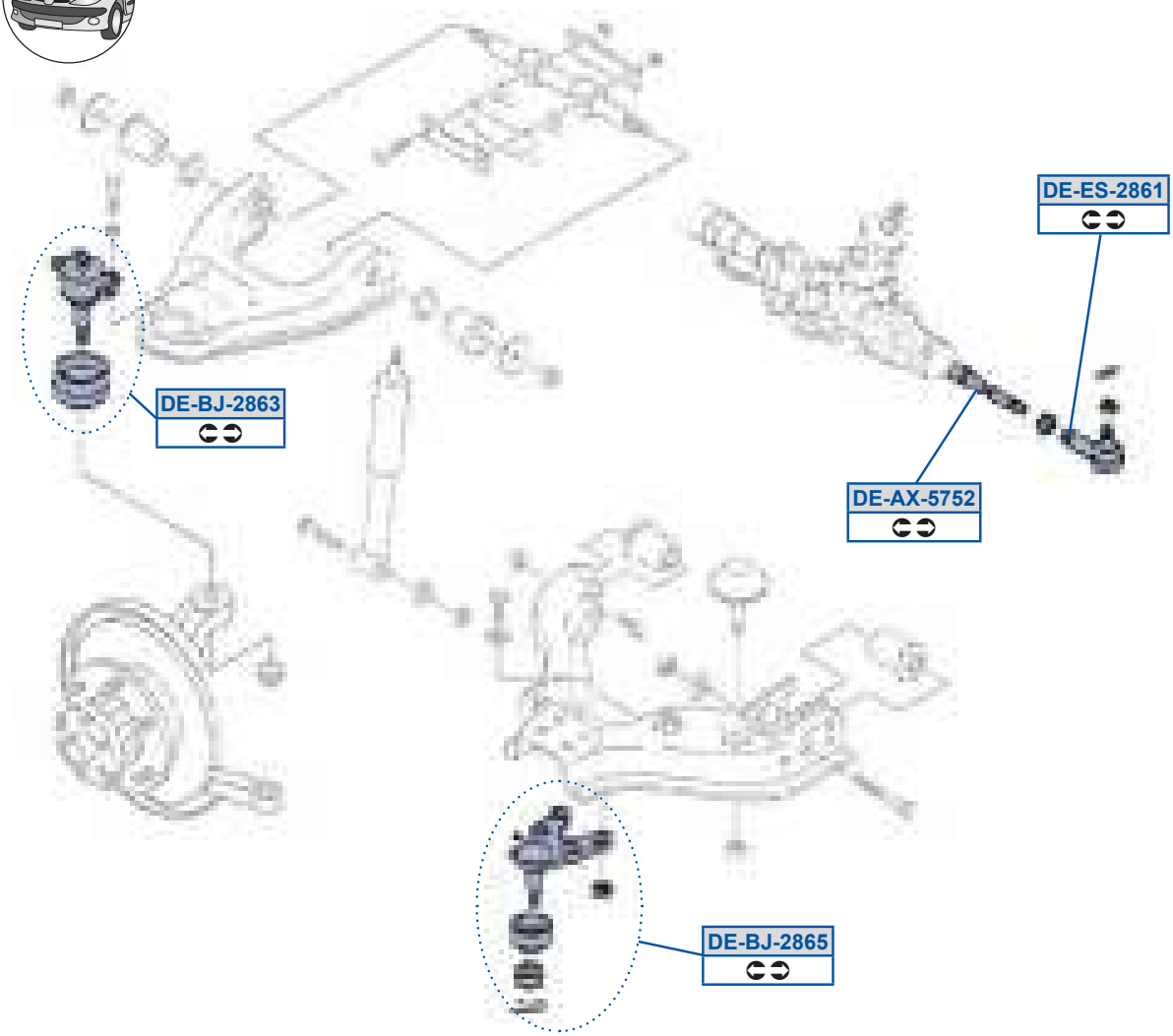

MOOG

RS50i 5CEC>

GCGC9GA7

RS5PX5>FDA

BBBA77A7873BBBA77A788

RS5PX5>FDC

BBC7C7C778

RS5Sd5>FD9

BDDD77CC773BDDD77CC78

ROSh _ _

ZOQSeeWVt vÉut v 0YZO] 1	8; 78B	ZOQSeeWdt 0X; 881	8D78; 9; 78B

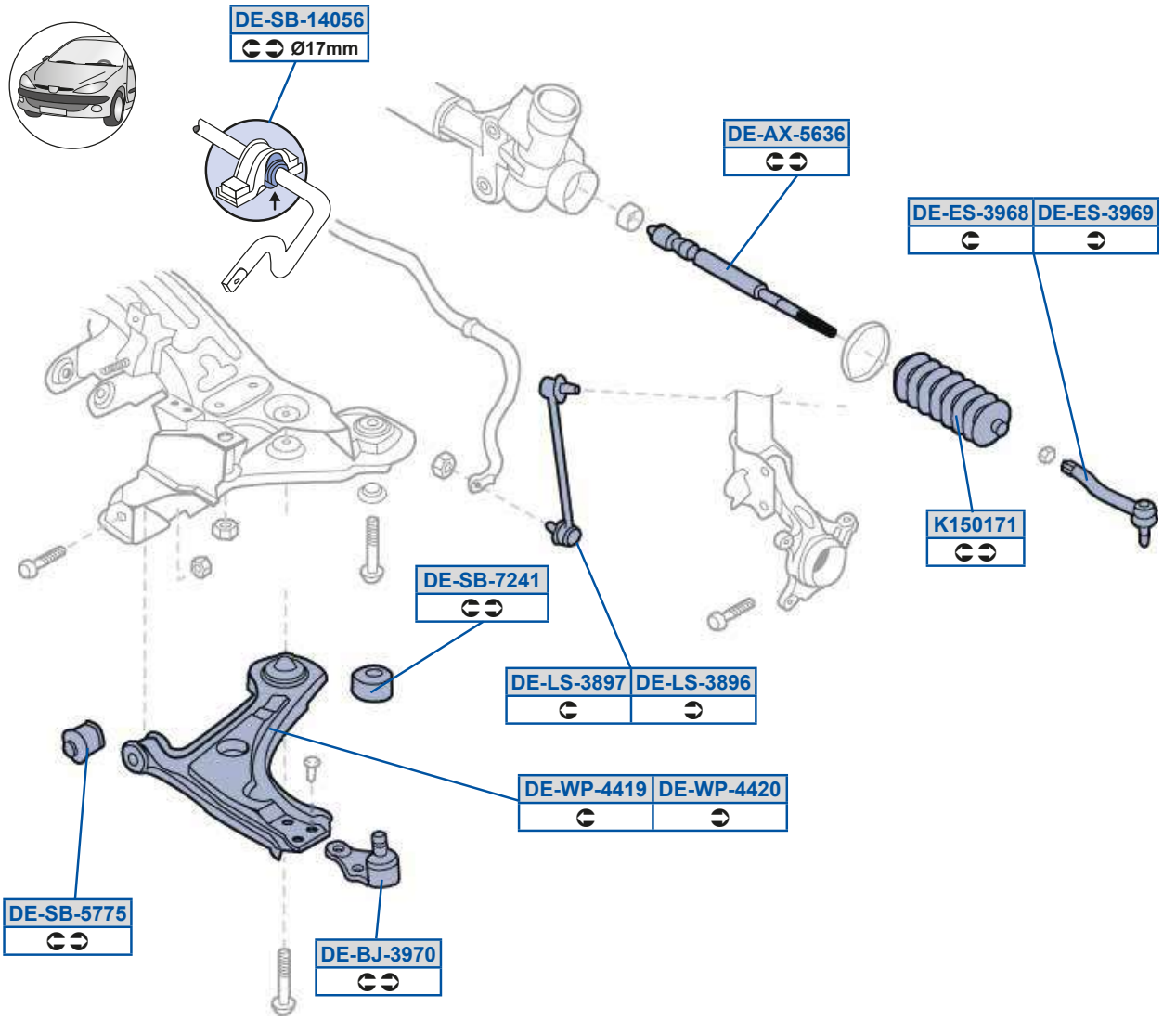

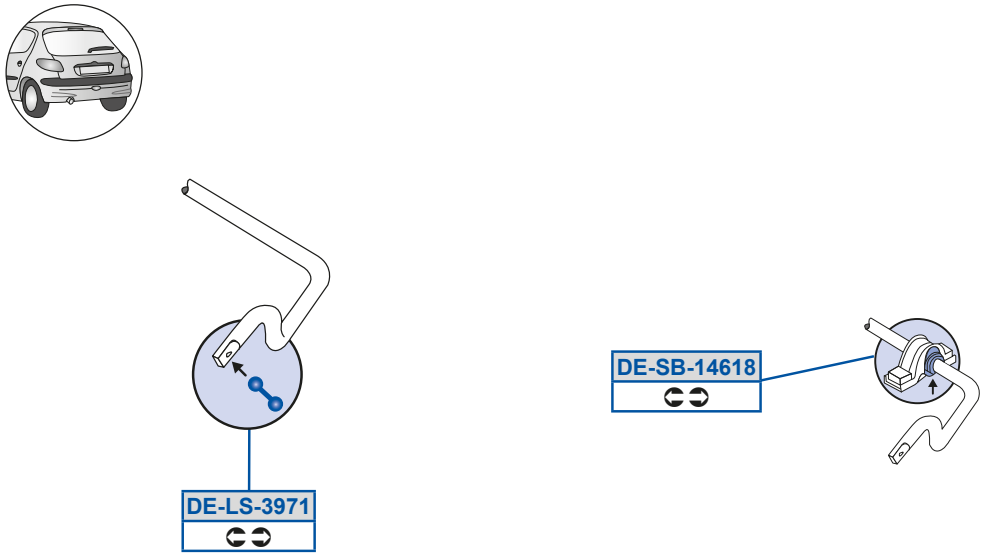

RS5Oi 5CDAD
C97DE93C97FAF

RS5dP59BD9F
GDB7EECC3GDBABCBA

RS5PX5AGE8
GDBG798F

RS5dP5CEEC
GDAEFABD

RS5Sd5AGDF
GDB7EBFC

RS5dP5E>B9
GDAG8FCD

RS5Sd5AGDG
GDB7EBFD

RS5h a5BB9G
GDAG8FC73GDB8C7DA

RS5Zd5AFGD
GDB7A877

RS5h a5BB>8
GDAG8FC83GDB8C7DB

RS5Zd5AFGE
GDB7A7GG

Y9C89E9
C97EAF

RS5Zd5AGE9
GDCD8ECB

RS5dP59B8CD
GDBABCB73GDBEB7B7

ROSh _ _

SdaSc_ OYZSX1	987G9 8G7GG	ZO] _d OYZOe1	8C7GE
ZO] _d dt OYZOe1	8C7GE	] Si WO7QWSZ_ OYZSe] 1	8; 7GC 8F7GE
] Si WO7QWSZ_ dt OYZSe] 1	8; 7GC 8A789	] Si WO dt OYZSe] 1	8; 7GC 8D78F

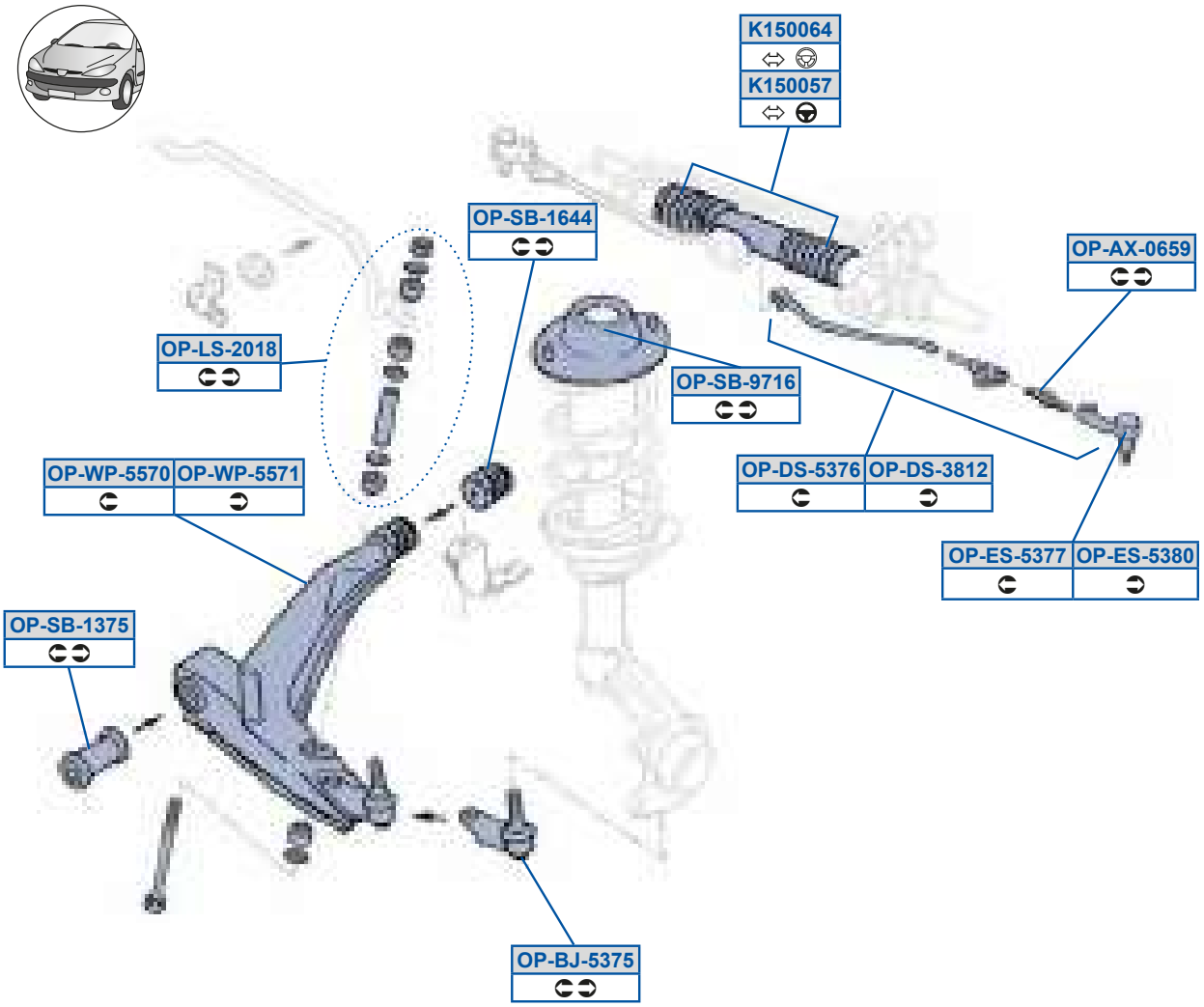

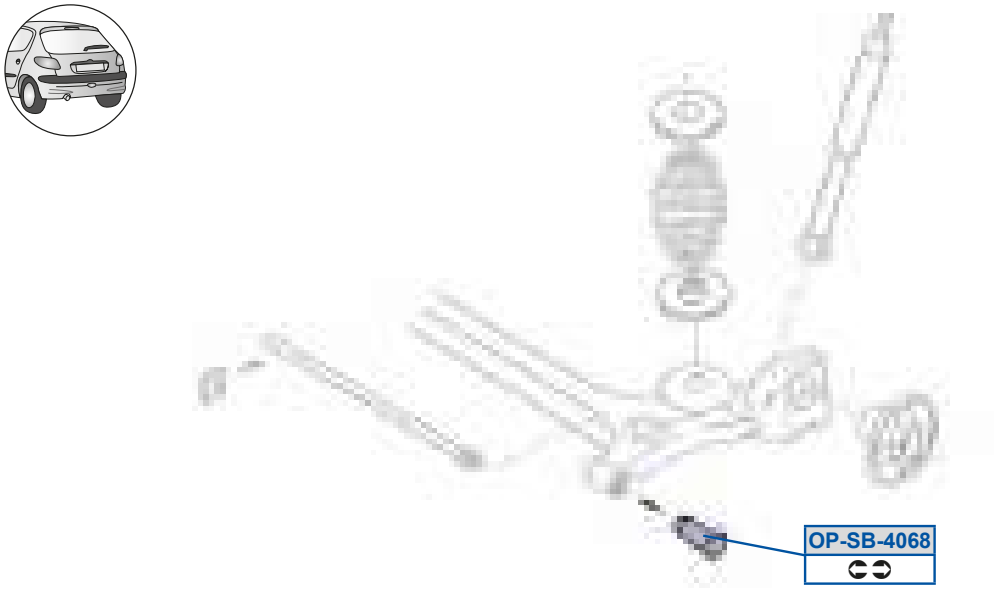

Y9C88CE
C97CB7

_ a5Zd5>89F
8D7A8BF

Y9C88DB
9D7987E7

_ a5dP59AEC
AC9AA7

_ a5Oi 58DCG
7EFBDDGD

_ a5dP59DBB
G79AC7B7

_ a5PX5CAEC
G7AECC7C3GBEFF899

_ a5dP5B8DF
G78FG7C7

_ a5Rd5AF9>
A9989D3EFBF9F9

_ a5dP5GE9D
9B97773CED9B9777

_ a5Rd5CAED
A9989C3EFBF9F8

_ a5h a5CCE8
AC989A3AC989F

_ a5Sd5CAEE
7EFBDBGC39D778F7E

_ a5h a5CCE9
AC989B3AC989E

_ a5Sd5CAF8
7EFBDBFC37EFBF9F9

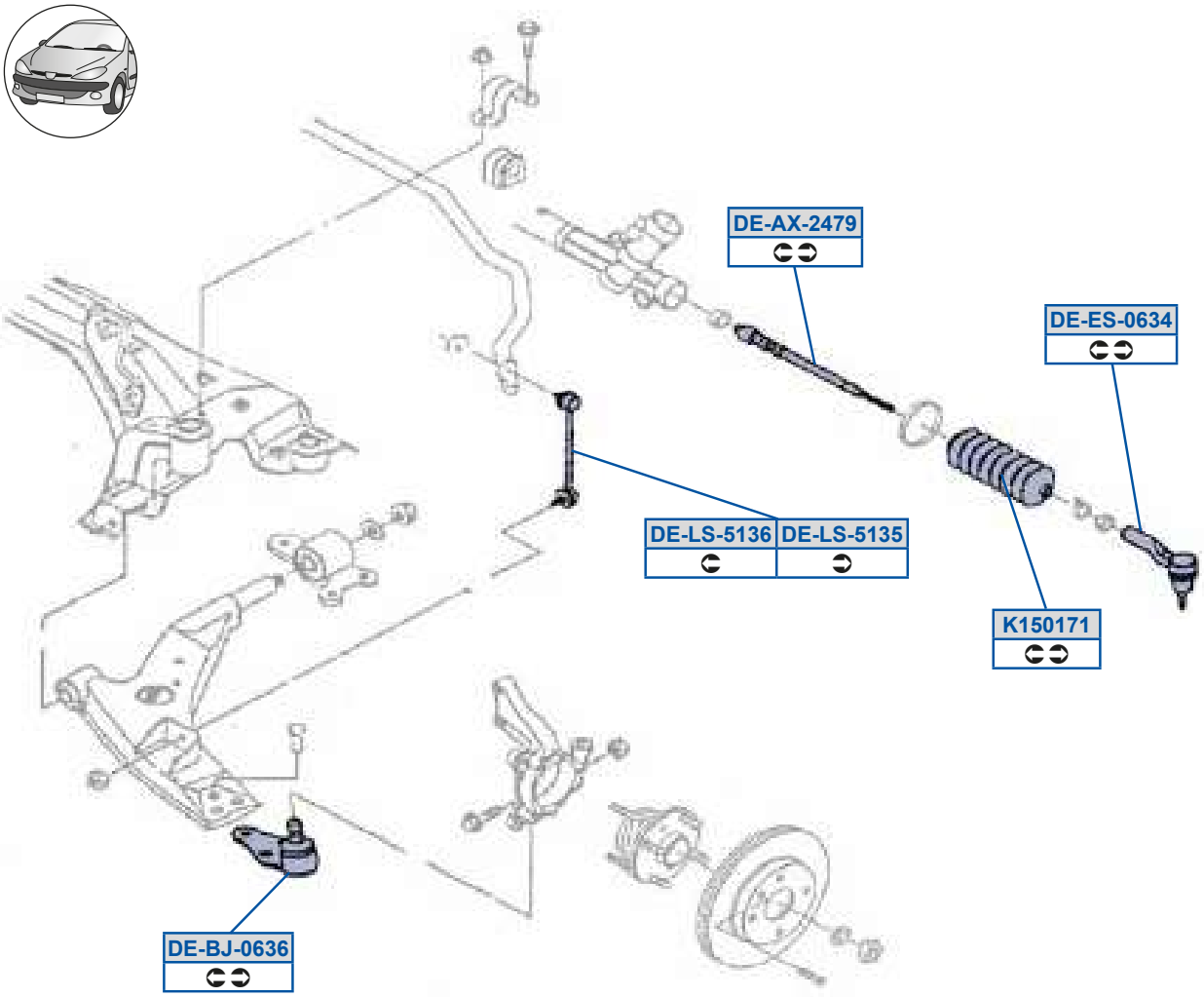
DE-AX-2479
DE-ES-0634
DE-LS-5136
DE-LS-5135
K150171
DE-BJ-0636

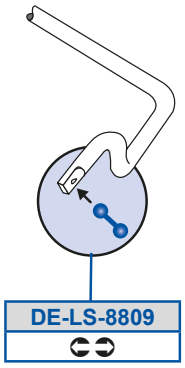
DE-LS-8809

RS5Oi 5>BEG
C97F7F3C97FGF

RS5PX58DAD
GD98A88G

RS5Sd58DAB
C979D93GAEB7E87

RS5Zd5C9AC
GD99CFCG

RS5Zd5C9AD
GD99CFCF

RS5Zd5FF8G
GD97ED9F

Y9C89E9
C97EAF

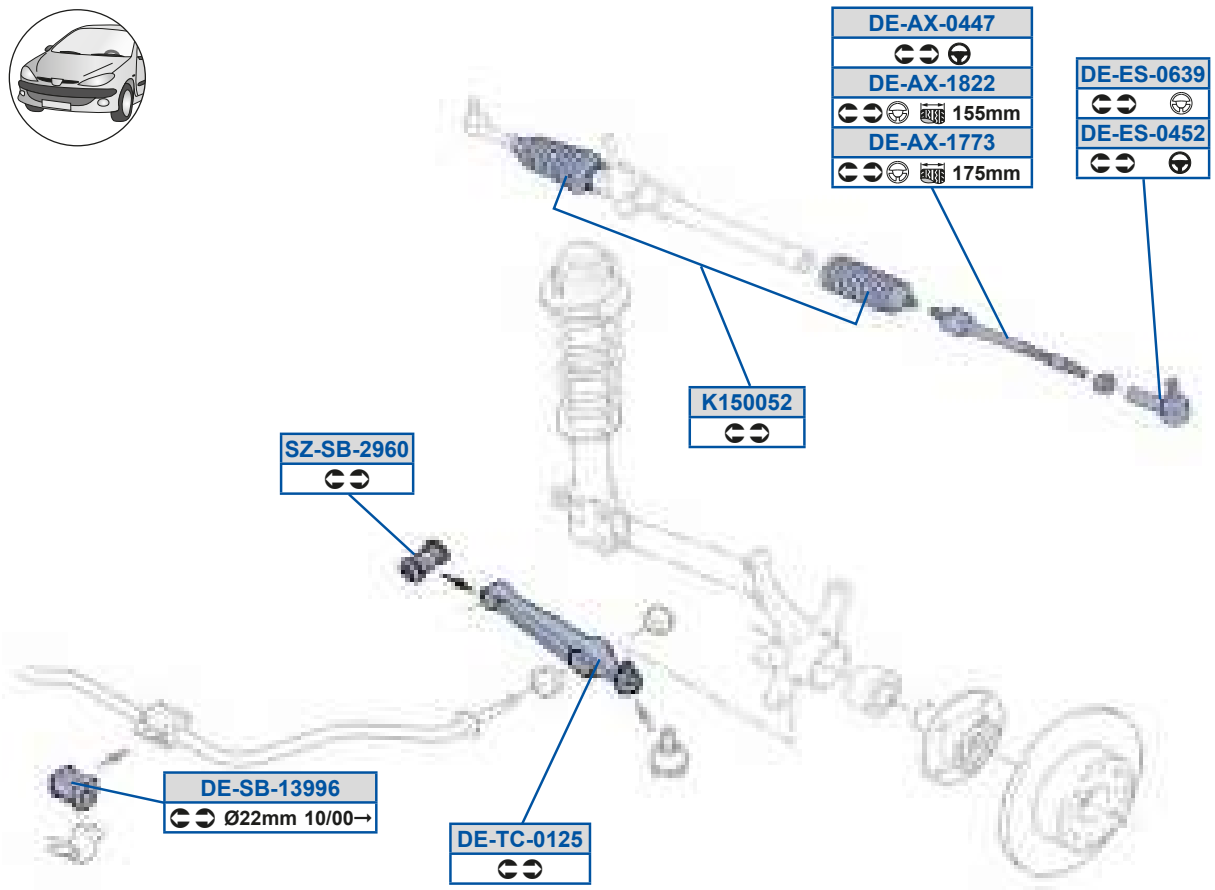
DE-AX-0447
DE-AX-1822
155mm
DE-AX-1773
175mm
DE-ES-0639
DE-ES-0452
K150052
SZ-SB-2960
DE-SB-13996
Ø22mm 10/00→
DE-TC-0125

RS5Oi 58BBE
YPXnBC

RS5Oi 59EEA
C989CE

RS5Oi 59F>>
C989CC3GAEB87EB

RS5Sd58BC>
C988AD3YPX79G

RS5Sd58DAG
BFF87OEFP777773C988AD

RS5dP59AGGD
GDA99D8F

RS5eQ589>C
BC977OE7P773BC977OE7P777

Y9C88C>
YnoZ8F

dk5dP5>GD8
GDAF7CFD

ROSh _ _

] f PW0 0X9881	8B7GE	] f PW0 P xt 0YZ0X1	8B7GE
] f PW0 dt 0X9881	8B7GE		

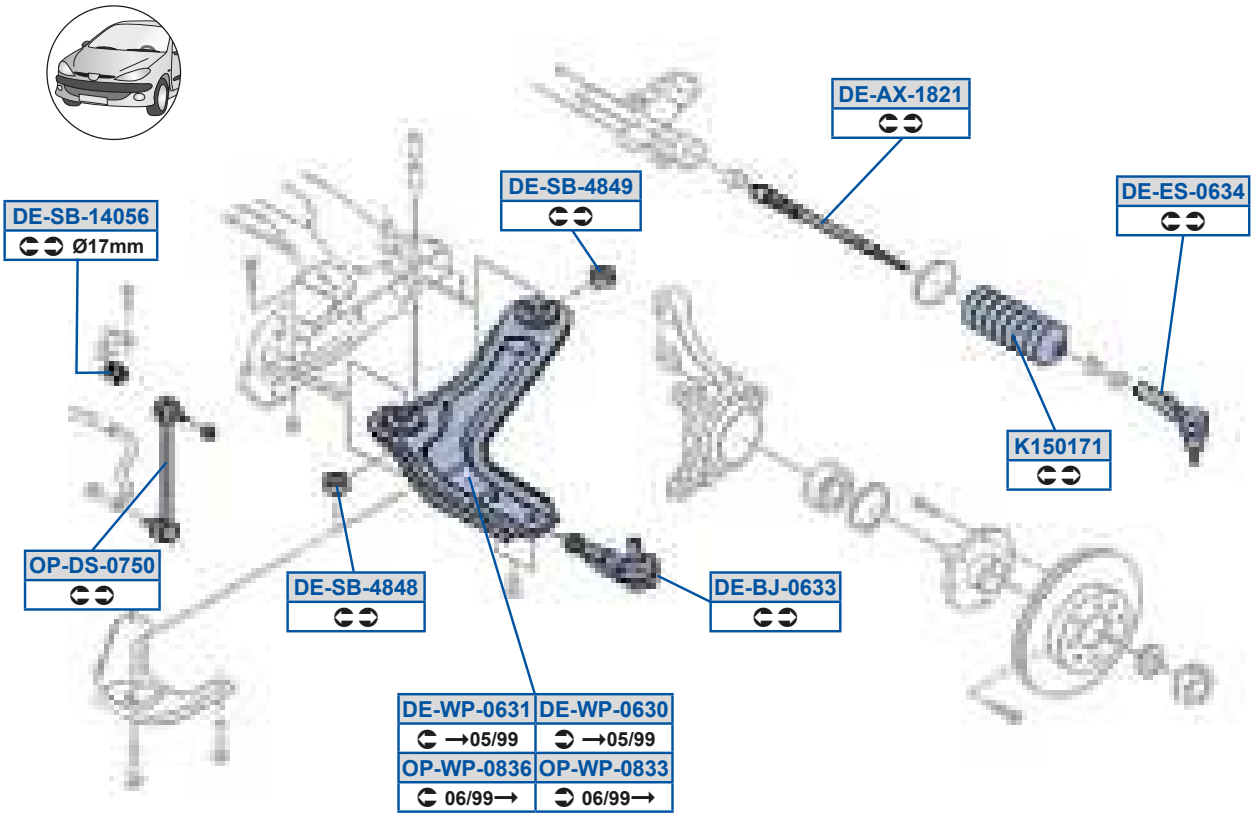

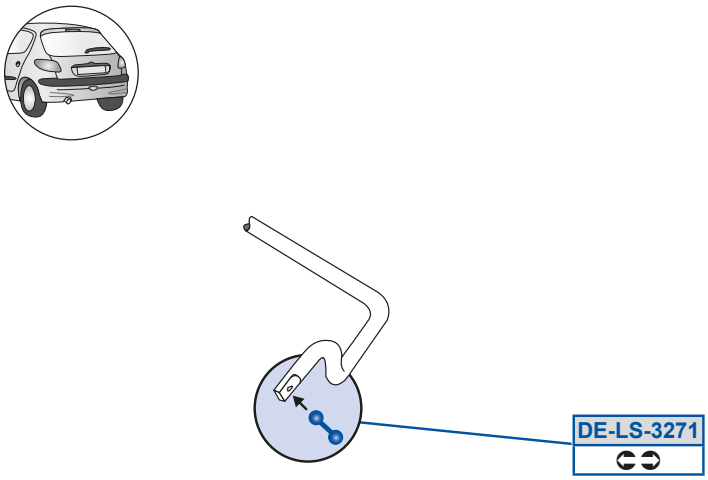

RS5Oi 59F>9
C97DE93C97FAF

RS5h a58DA9
GD9DFBAF3GD9DFBAG

RS5PX58DAA
GDA77DBF

Y9C89E9
C97EAF

RS5Sd58DAB
C979D93GAEB7E87

_ a5Rd58EC8
GD9ECEGF3GDA77D9E

RS5Zd5A>E9
GDA779993GDAG8FED

_ a5h a58FAA
GD9DFBCC

RS5dP59B8CD
GDBABCB73GDBEB7B7

_ a5h a58FAD
GD9DFBCB

RS5dP5BFBF
GD9DFBAF /40 3GD9DFBAG /40

RS5dP5BFBG
GD9DFBAF /40 3GD9DFBAG /40

RS5h a58DA8
GD9DFBB73GD9EC78B

ROSh _ _

] f PW0 P xt 0YZ0] 1	8E78A	] f PW0 dt 0X; 881	8E78A

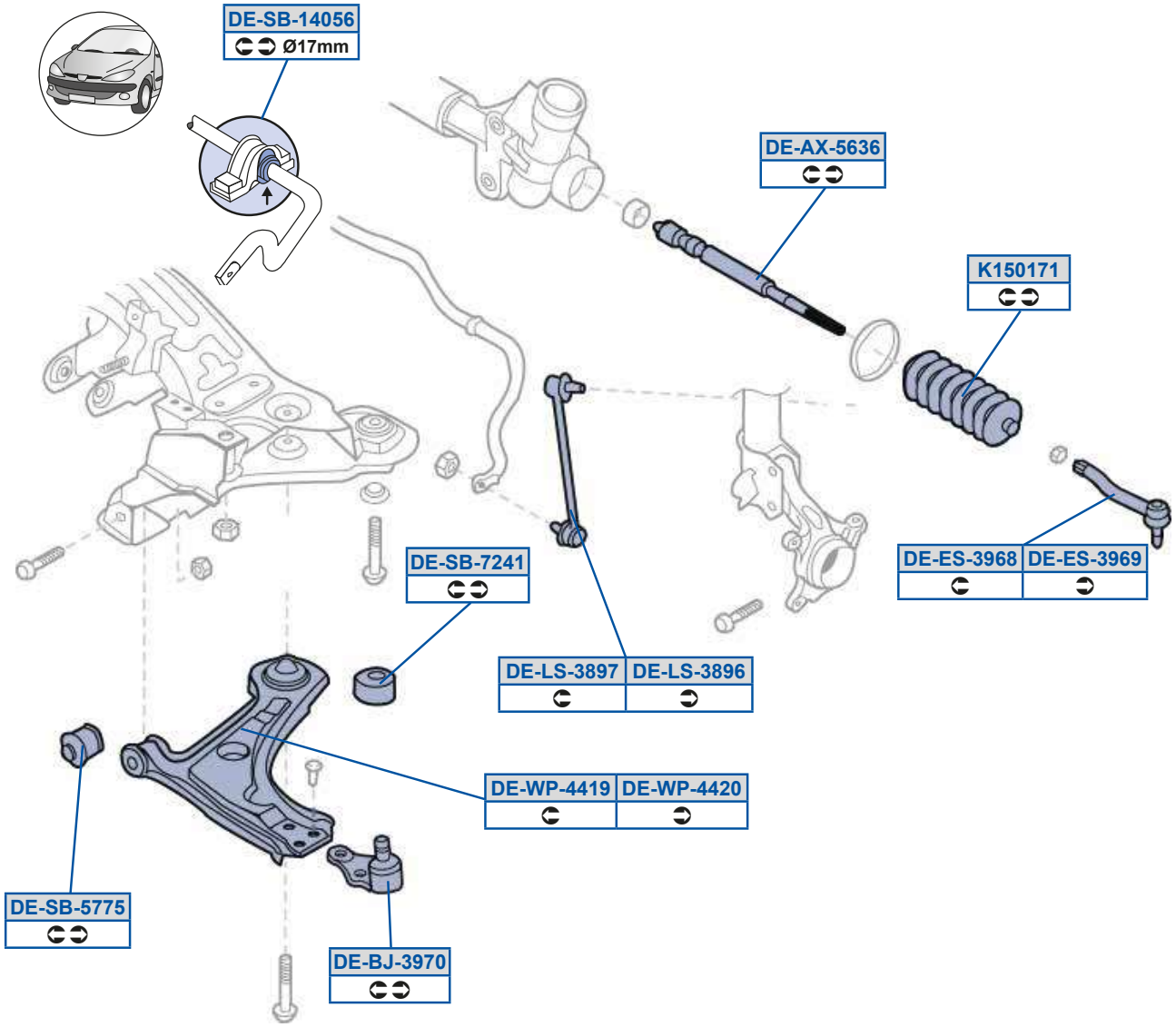

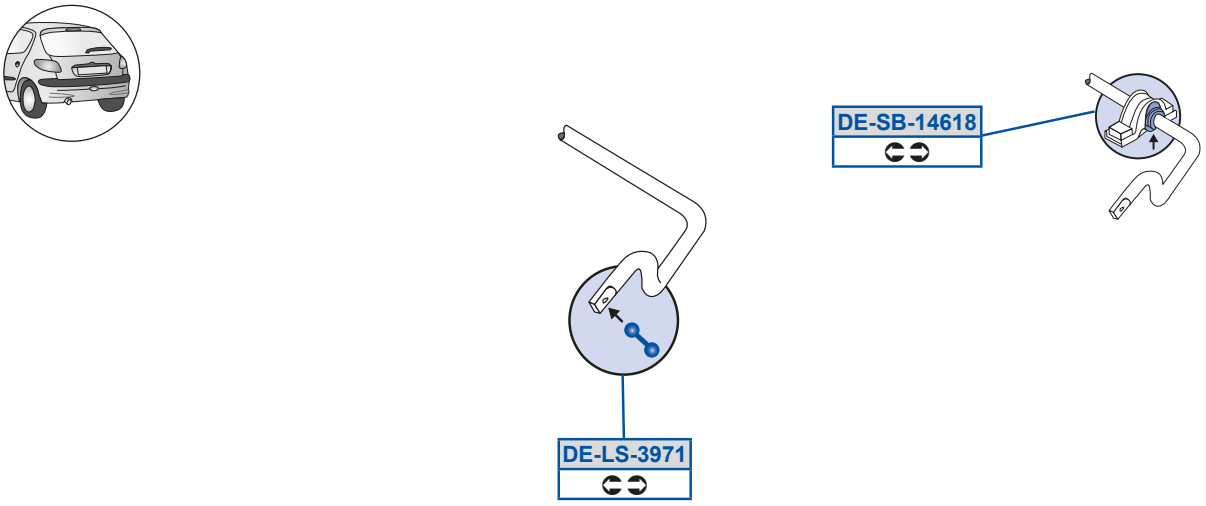

MOOG

RS5Oi 5CDAD
C97DE93C97FAF

RS5dP59BD9F
GDB7EECC3GDBABCBA

RS5PX5AGE8
GDBG798F

RS5dP5CEEC
GDAEFABD

RS5Sd5AGDF
GDB7EBFC

RS5dP5E>B9
GDAG8FCD

RS5Sd5AGDG
GDB7EBFD

RS5h a5BB9G
GDAG8FC73GDB8C7DA

RS5Zd5AFGD
GDB7A877

RS5h a5BB>8
GDAG8FC83GDB8C7DB

RS5Zd5AFGE
GDB7A7GG

Y9C89E9
C97EAF

RS5Zd5AGE9
GDCD8ECB

RS5dP59B8CD
GDBABCB73GDBEB7B7

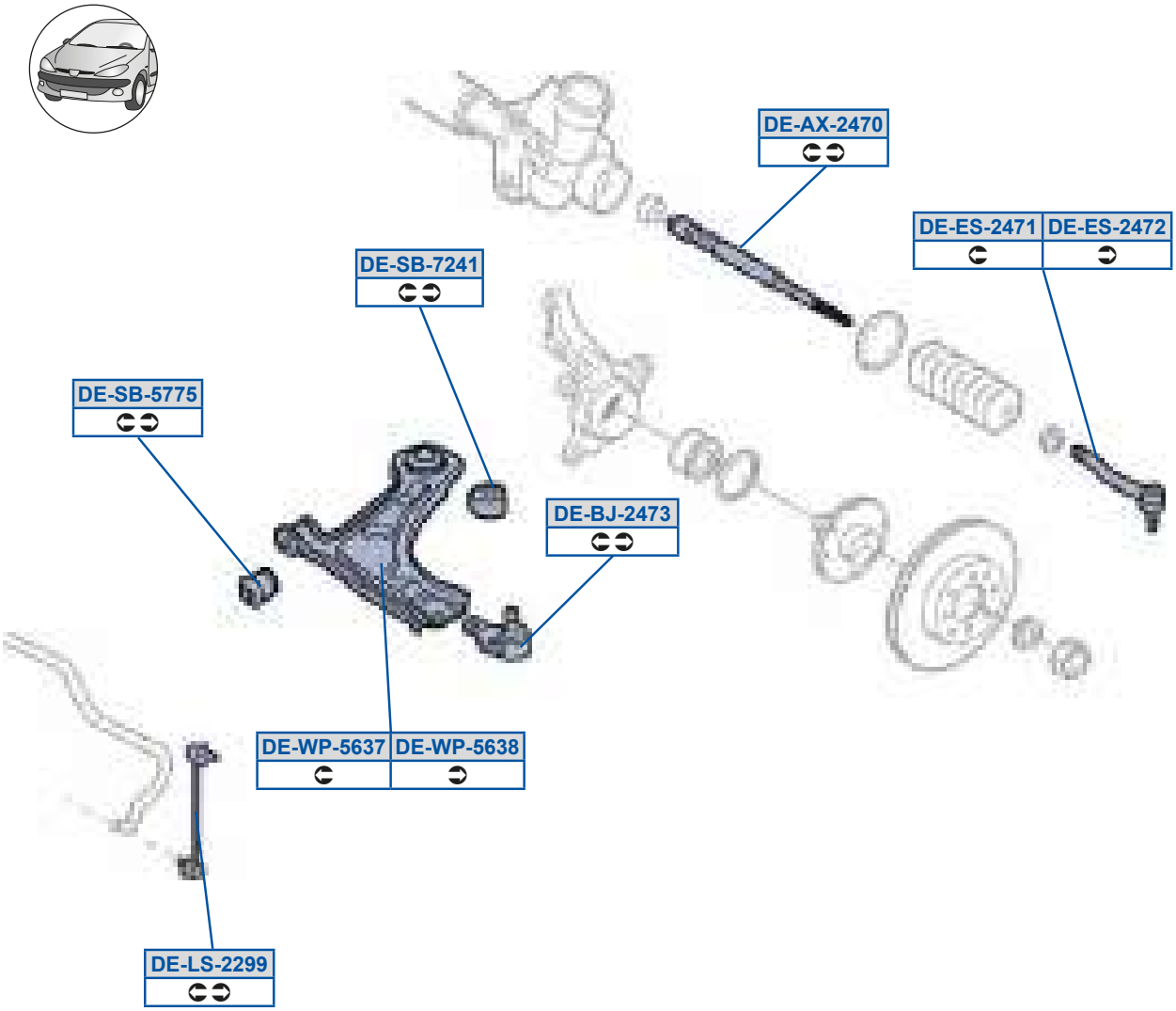
DE-AX-2470
DE-ES-2471
DE-ES-2472
DE-SB-7241
DE-SB-5775
DE-BJ-2473
DE-WP-5637
DE-WP-5638
DE-LS-2299

RS5Oi 5>BE8
C98CDB3GAEB7D98

RS5PX5>BEA
GD9D887F

RS5Sd5>BE9
GD9D8AEF

RS5Sd5>BE>
GD9D8AEG

RS5Zd5>>GG
GD9ECEGF3GDAG8FEC

RS5dP5CEEC
GDAEFABD

RS5dP5E>B9
GDAG8FCD

RS5h a5CDAE
GD9D87GG3GDAEFABE

RS5h a5CDAF
GD9D88773GDAEFABF

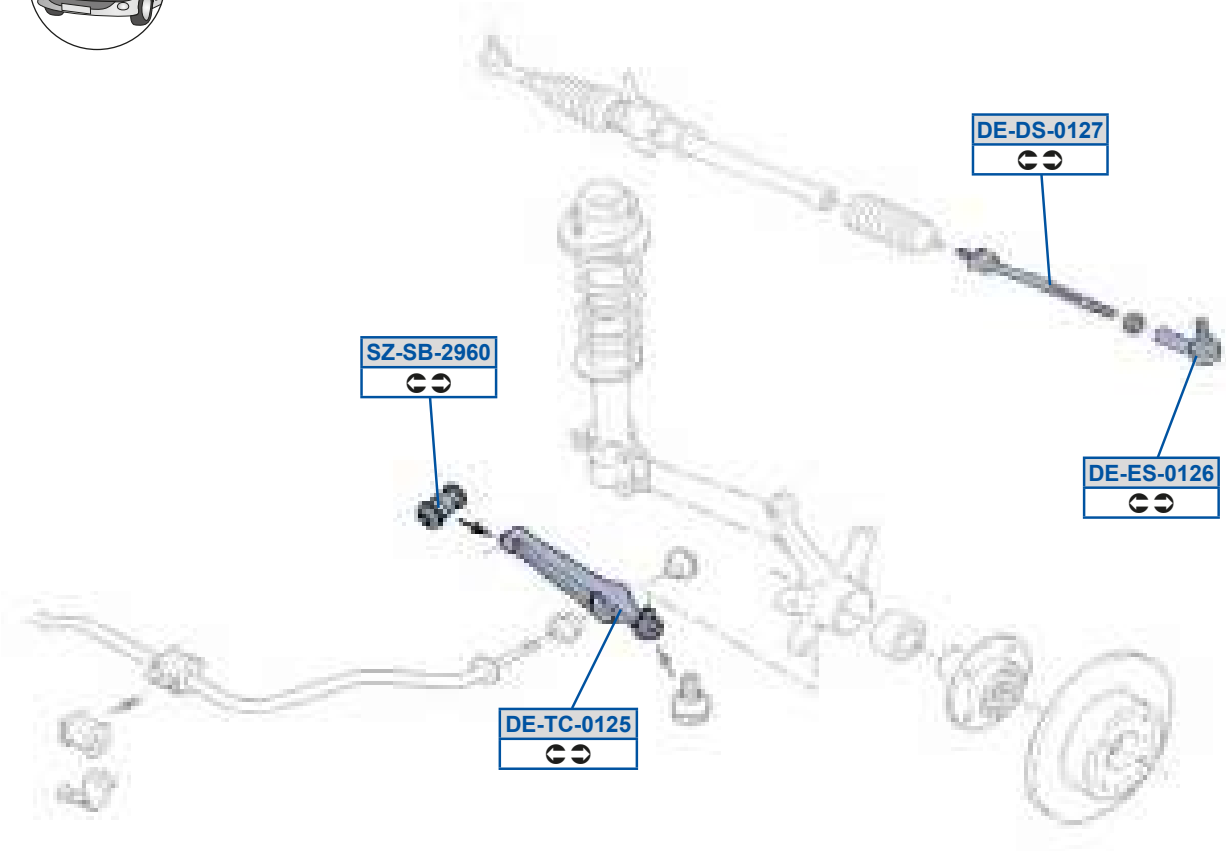
DE-DS-0127
SZ-SB-2960
DE-ES-0126
DE-TC-0125

RS5Rd589>E
BFFA7OEFP77

RS5Sd589>D
BFF87OEFP773C988AD

RS5eQ589>C
BC977OE7P773BC977OE7P777

dk5dP5>GD8
GDAF7CFD

QVOc ORS WWOU9884U9894U98; 1	897FE	8E7GA	QVOc ORS WWdt	OU98; 1	997G8 8; 7GA
QVOc ORS Wy OU; 884U; 8; 1	897GA	8G788	QVOc ORS Wy dt	OU; 8A1	8A7GA 89789

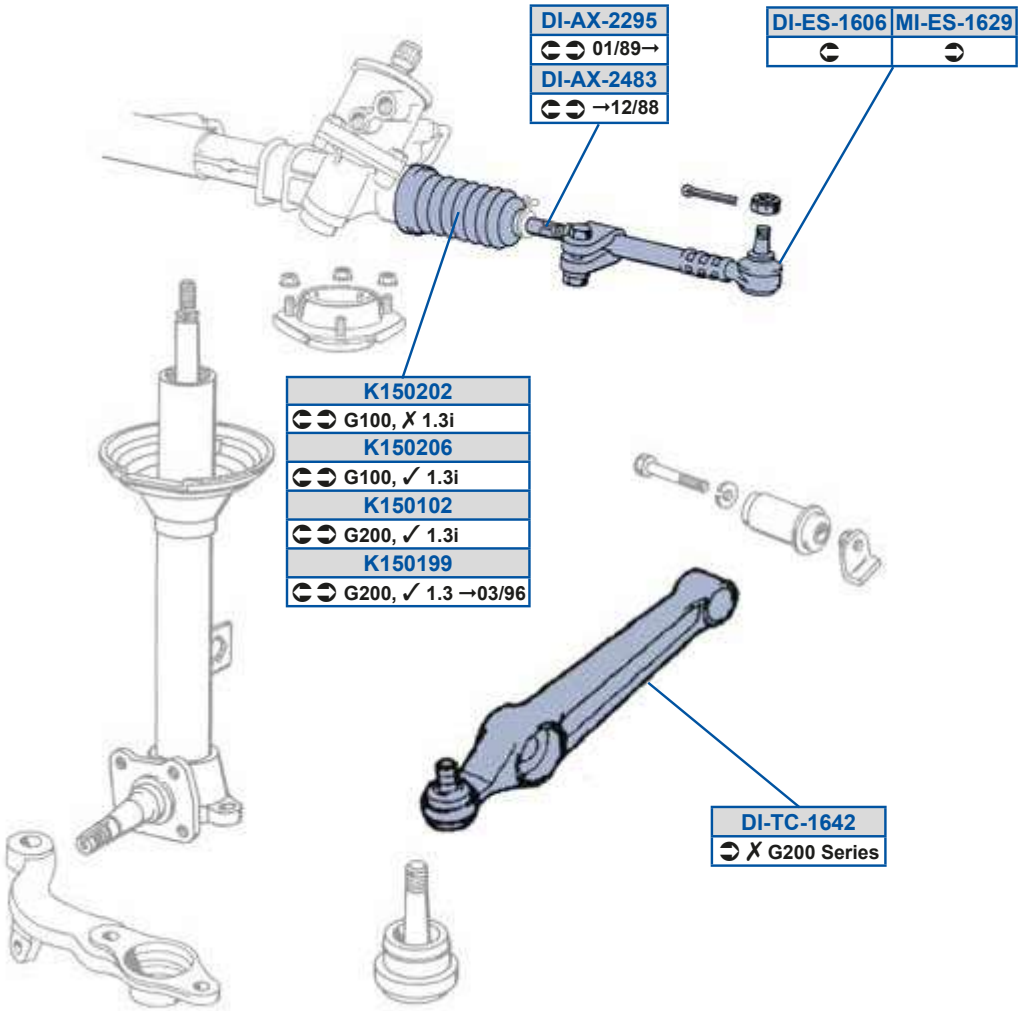

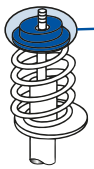

HY-SB-9770
✓ G200, G202 Series

RV5Sd59D8D

BC7BEFEEF83BC7BEFEEF9

Vj 5dP5GEE8

BFDGAFEE7A3CCA8899777

Y9C898>

BCCACFE97C3BCCACFEE7B

Y9C89GG

BCCAC877D73BCCAC8D7A7

[V5Sd59D>G

BC7BDFEEF83BC7BDFEEF9

ROWOedf Qyr r uv 09GFE 5L1U9885>88n

ROW Oedf

Qf _cS WOZF84ZF917[W0 WOZF84ZF91	8G7FC 9; 7G8	Qf _cS WOZ; 8917[W0 WOZ; 891	8F7G8 8B7GC
Qf _cS Wy OZC891	9; 7GB 8C7GG	Qf _cS g OZC1	997GD 987GF

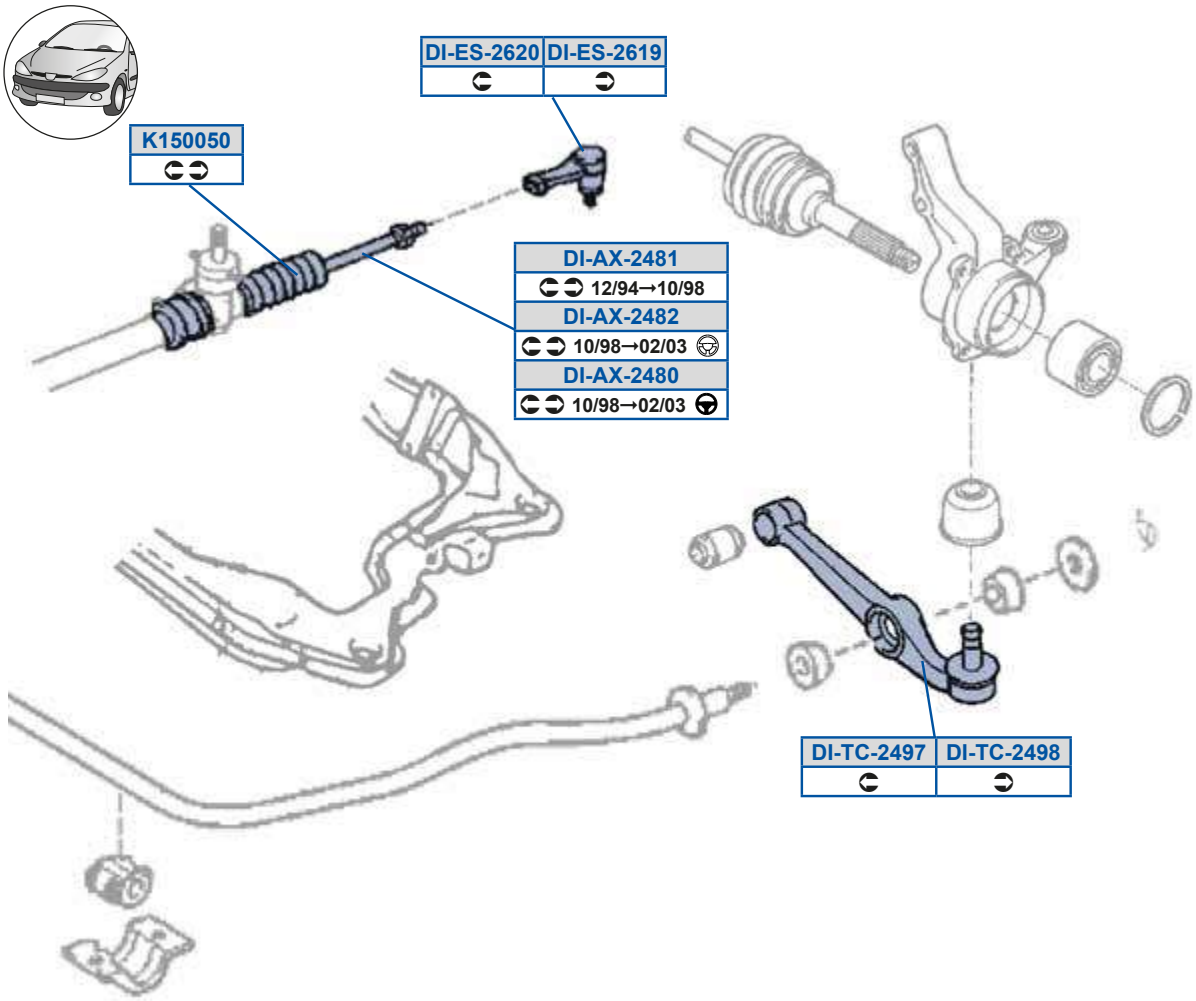

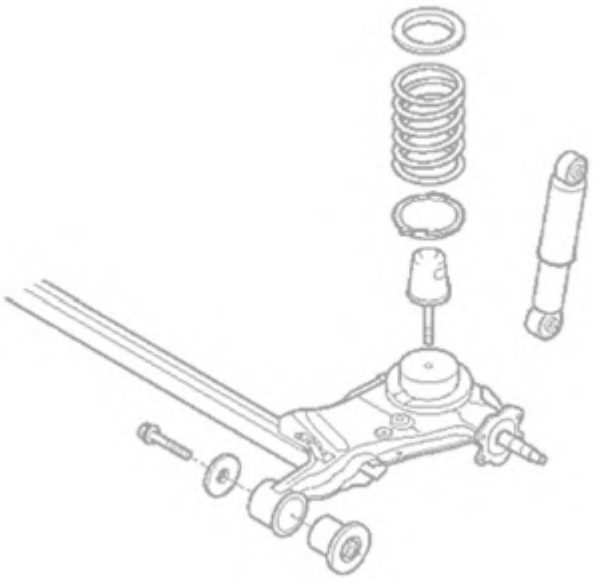

MOOG

RV5Oi 5>BF8
BCC7AGE97A

RV5Oi 5>BF9
BCC7AFE98C

RV5Oi 5>BF>
BCC7AGE97B

RV5Sd5>D9G
BC7BDFE9F93BC7BDFE9FA

RV5Sd5>D>8
BC7BEFE9F73BC7BEFE9F8

RV5eQ5>BGE
BF7DGGE9793BF7DGGE97A

RV5eQ5>BGF
BF7DFGE9793BF7DFGE97A

Y9C88C8
BCCACFEC7C3BCCACFEC7D

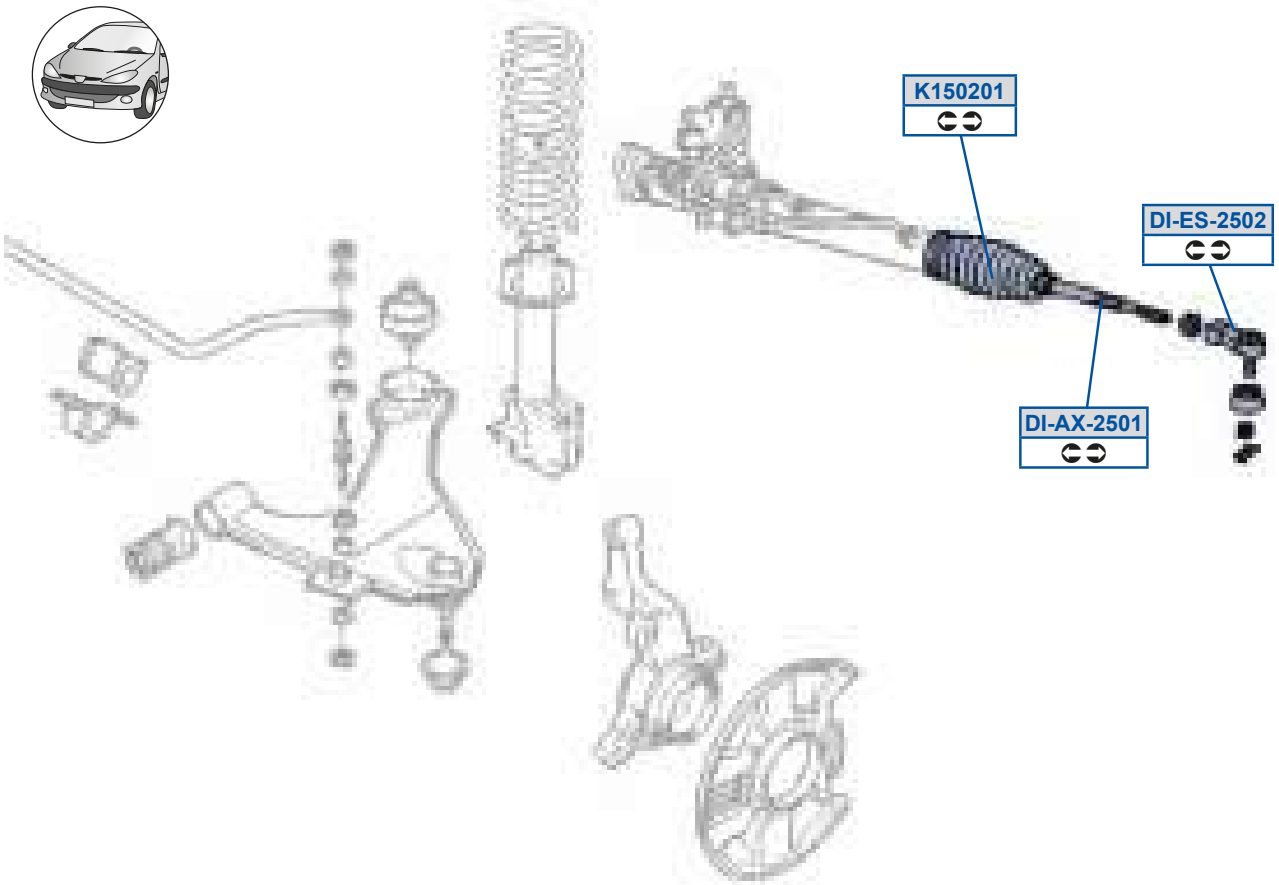

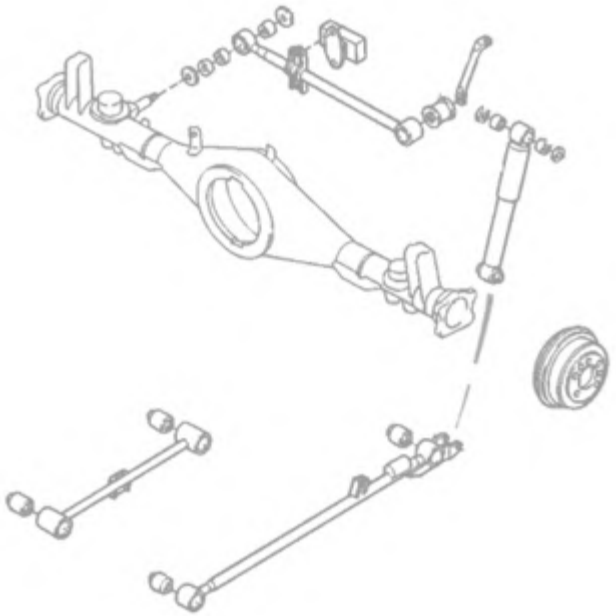

MOOG

RW5Oi 5>C89

BCBD7FEB783BCBD7FEB78777

RW5Sd5>C8>

BC7BDFEB783BC7BDFEB79

Y9C8>89

9E8E773BCCACFEB78

ROWOedf

eSc W d 0X; r 1	9978C		

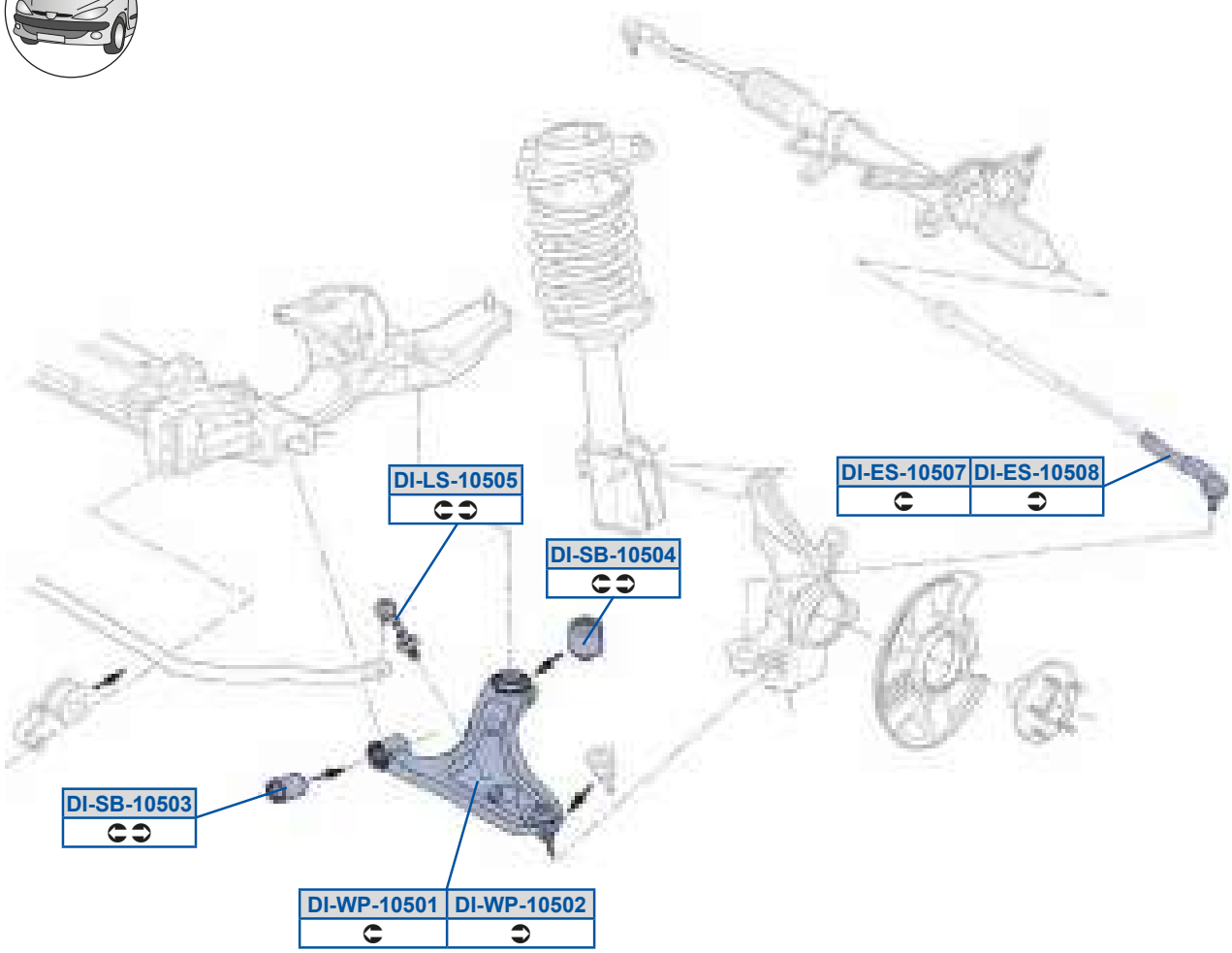

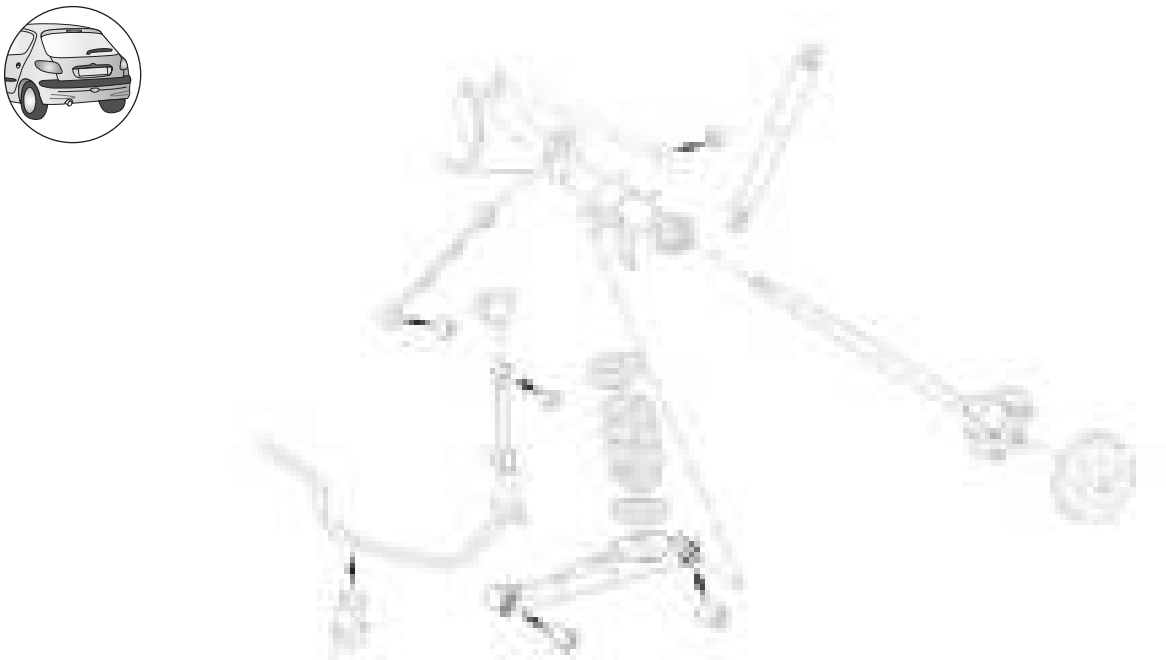

MOOG

RW5Sd598C8E

BC7BDPG7F73BC7BDPGA97

RW5Sd598C8F

BC7BEPG7E73BC7BEPG9E7

RW5Zd598C8C

BFF99GEC7A

RW5dP598C8A

BF7DFPB787 /40

RW5dP598C8B

BF7DFPB787 /40

RW5h a598C89

BF7DGPB7873BF7DGPB788

RW5h a598C8>

BF7DFPB7873BF7DFPB788

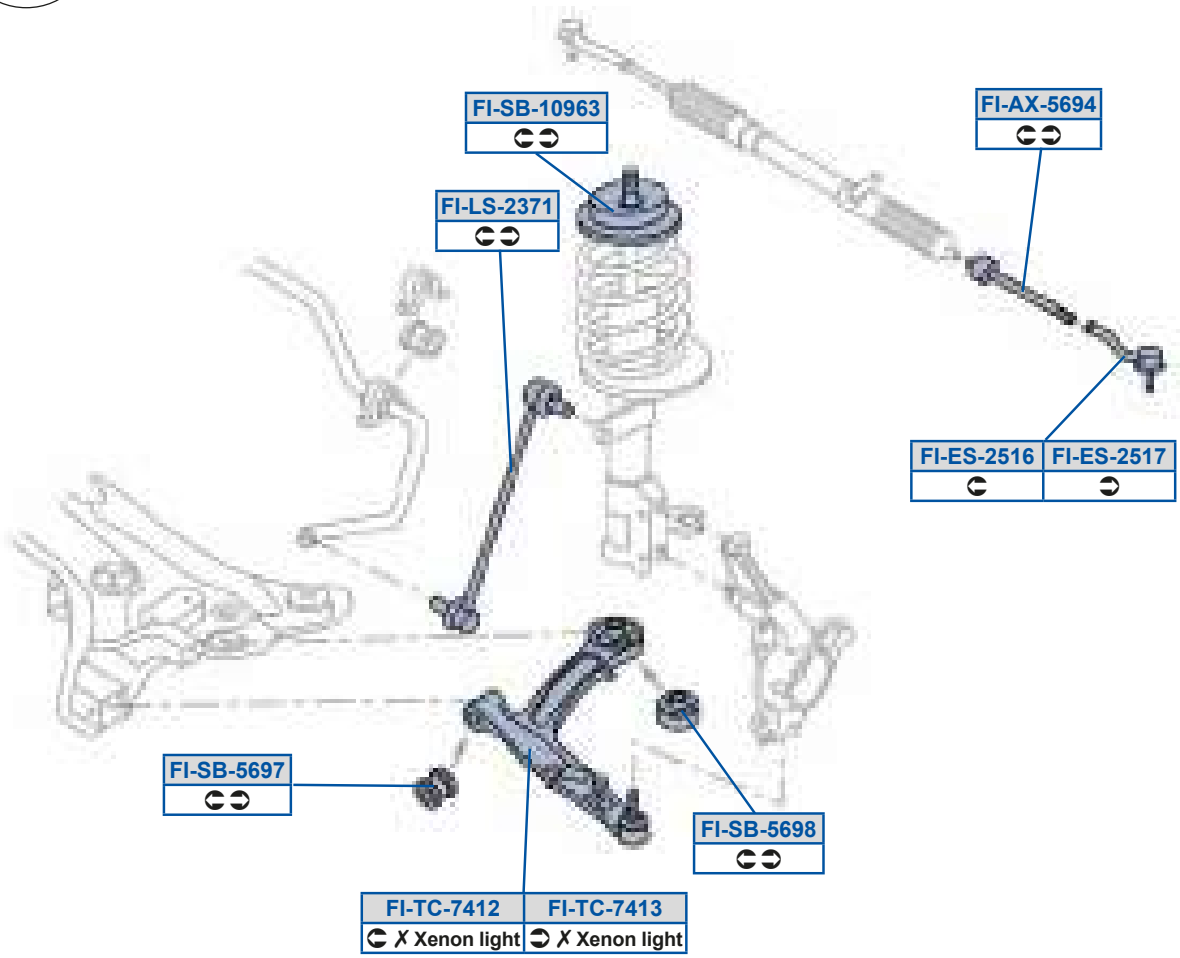
FI-SB-10963
FI-AX-5694
FI-LS-2371
FI-ES-2516
FI-ES-2517
FI-SB-5697
FI-SB-5698
FI-TC-7412
✗ Xenon light
FI-TC-7413
✗ Xenon light

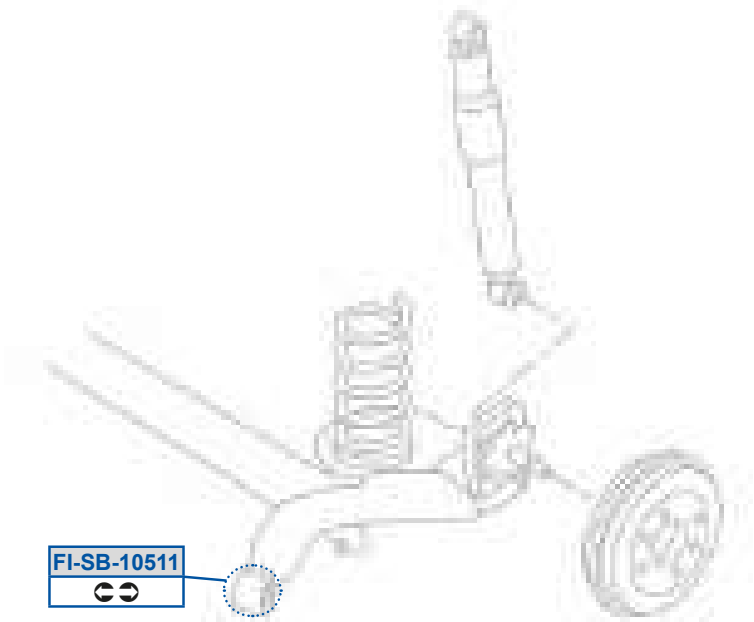
FI-SB-10511

TV5Oi 5CDGB
8CB8ACB38CB8ACC

TV5Sd5>C9D
EEAD9C7E3EEADE778

TV5Sd5>C9E
EEAD9C7F3EEADE779

TV5Zd5>AE9
C7E77BDB3C7E77GB8

TV5dP598C99
C7E7A9E83C8EGDDDB

TV5dP598GDA
BDEBDCBB

TV5dP5CDGE
C7E7FF9A /40 3C7E7FF9B /40

TV5dP5CDGF
C7E7FF9A /40 3C7E7FF9B /40

TV5eQ5EB9>
C7E7FF9A3C7E7GCEG

TV5eQ5EB9A
C7E7FF9B3C7E7GCF7

C88Z	8G79;		

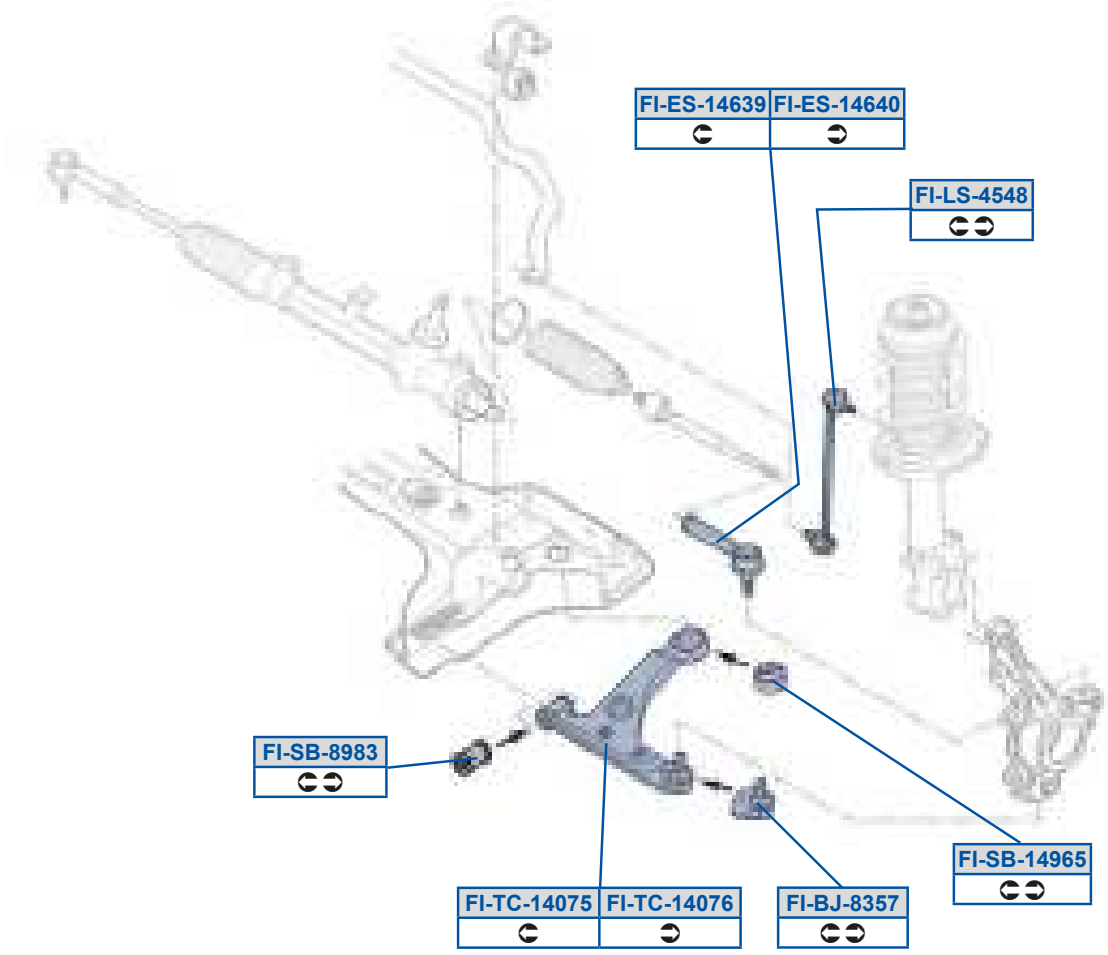
FI-ES-14639
FI-ES-14640
FI-LS-4548
FI-SB-8983
FI-SB-14965
FI-TC-14075
FI-TC-14076
FI-BJ-8357

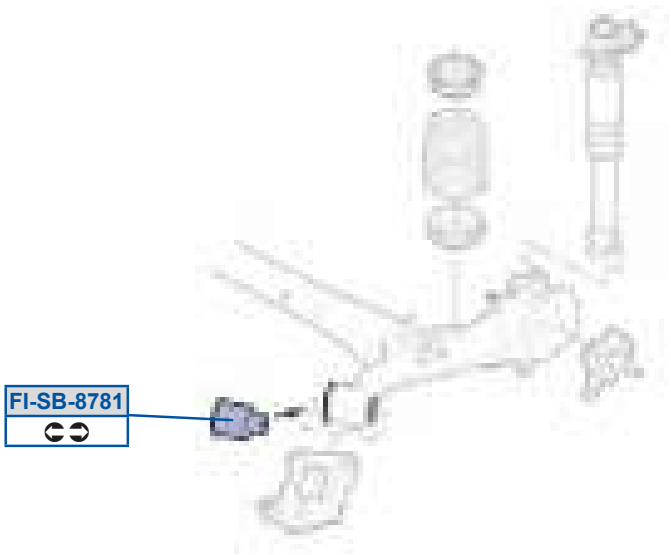
FI-SB-8781

TV5P X5FACE
C8F87DDB /40

TV5S d59BDAG
EEADD8DC

TV5S d59BDB8
EEADD8DD

TV5Z d5BCBF
C7C8C9ED3C7CA8F9A

TV5d P59BGDC
C8FFCDD7 /40 3C8FFCEAC

TV5d P5FEF9
C8FB7D77

TV5d P5FGFA
C8F87DDB /40 3C8F87DDC /40

TV5e Q59B8EC
C8FFCEAE

TV5e Q59B8ED
C8FFCDD7

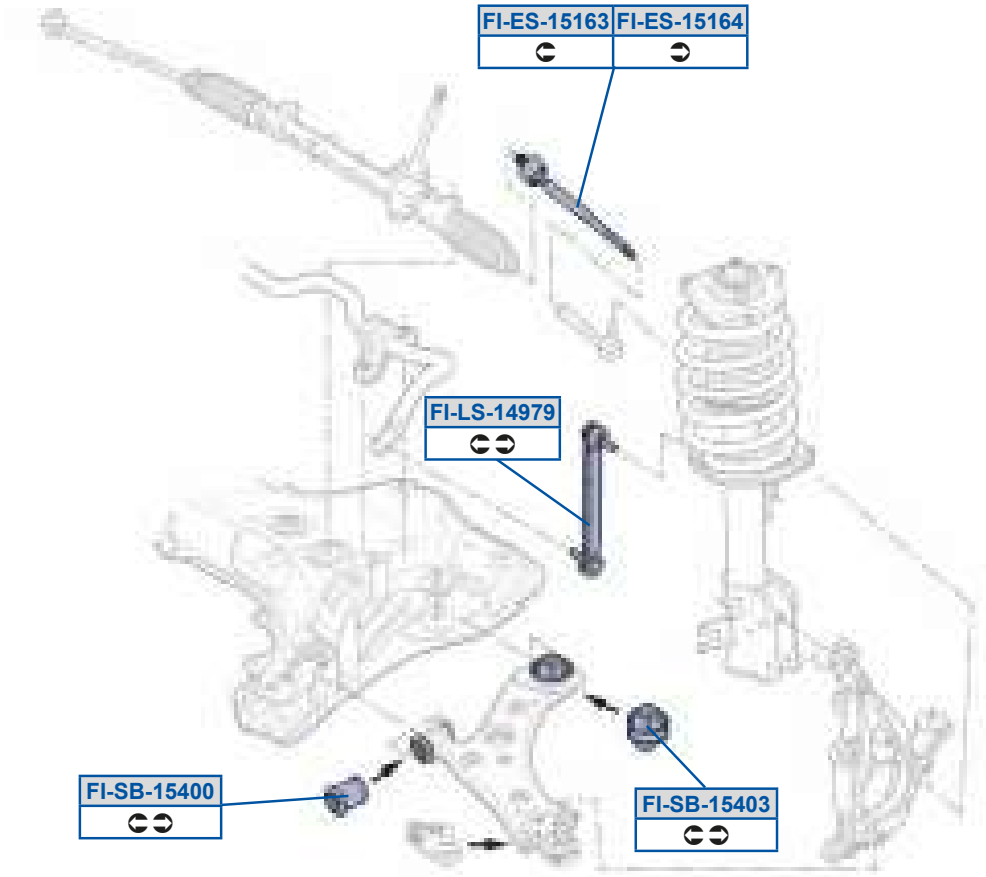

4x2

4x4

TV6Sd59C9DA
EEADDDGF

TV6Sd59C9DB
EEADDDGG

TV6Zd59BGEG
C8GAGGBG

TV6dP59CB88
C8GAGECA/4CBC8GCGF97/40

TV6dP59CB8A
C8GAGECB/4CBC8GCGF97/40

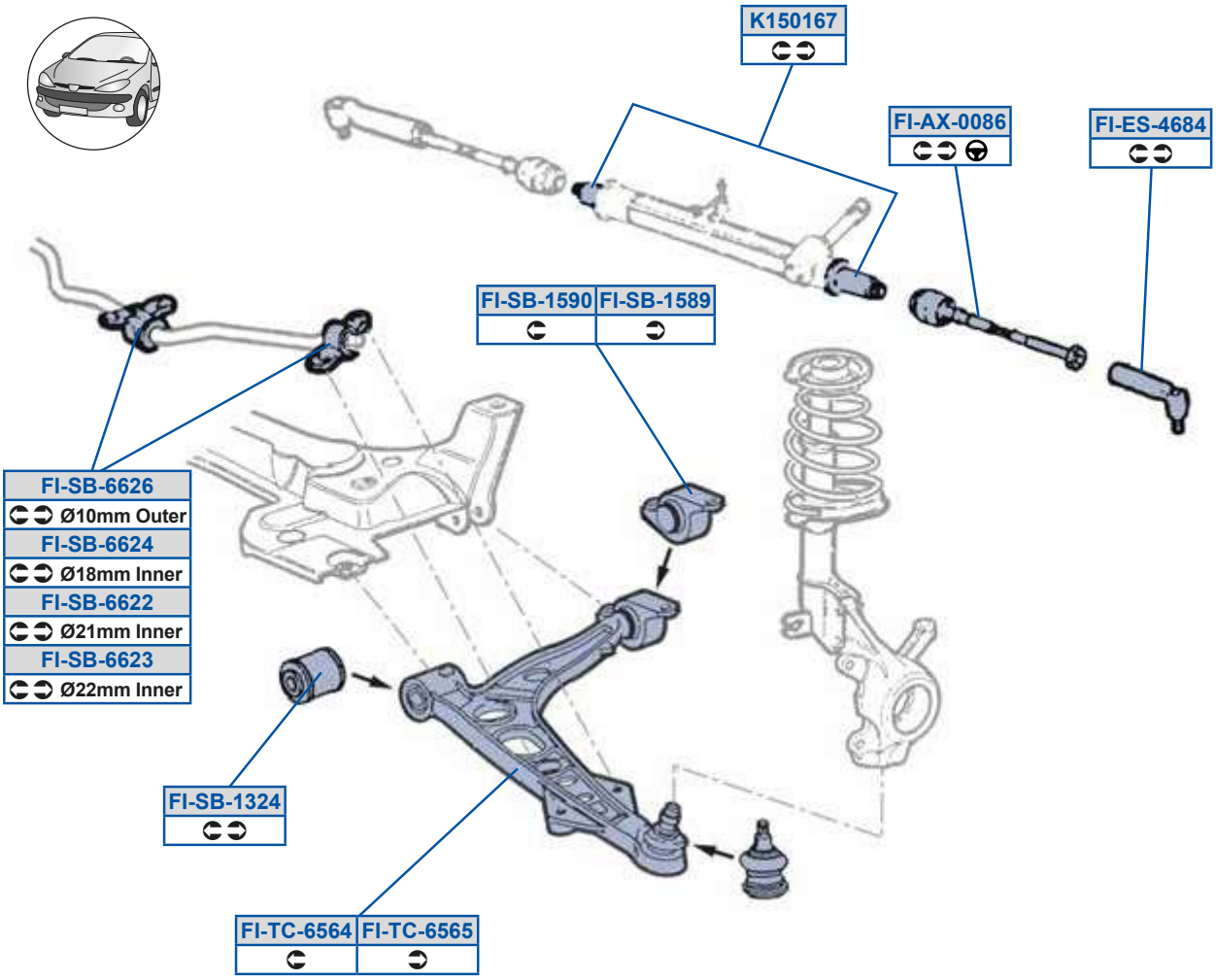
K150167
FI-AX-0086
FI-ES-4684
FI-SB-1590
FI-SB-1589
FI-SB-6626
Ø10mm Outer
FI-SB-6624
Ø18mm Inner
FI-SB-6622
Ø21mm Inner
FI-SB-6623
Ø22mm Inner
FI-SB-1324
FI-TC-6564
FI-TC-6565

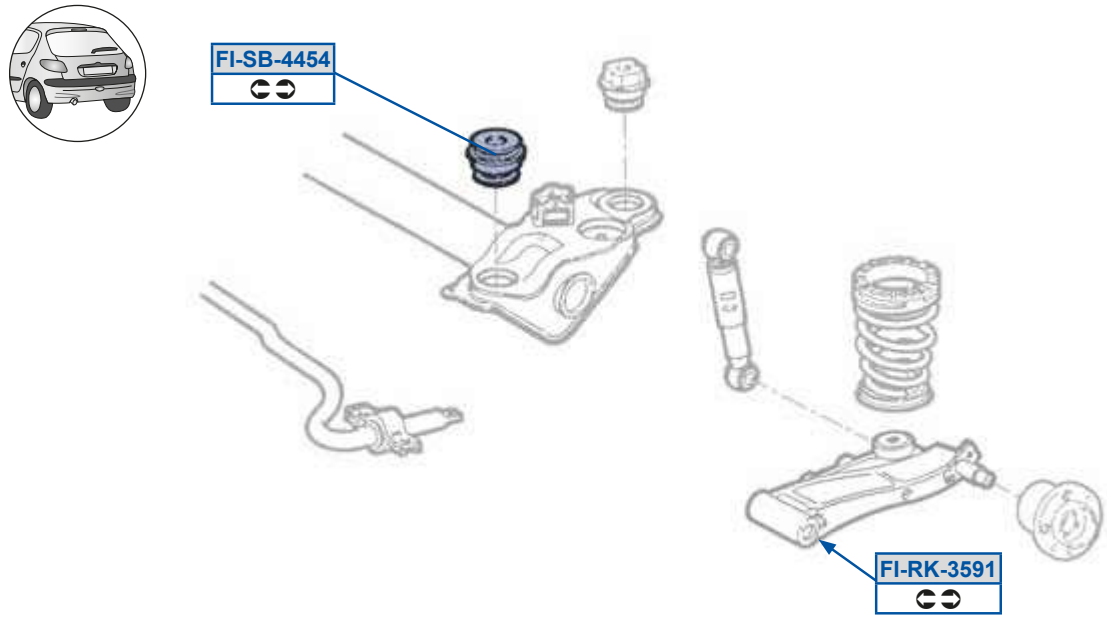
FI-SB-4454
FI-RK-3591

TV6Oi 588FD
GGBCCD9

TV6dP5DD>A
EEC7GFA

TV6Sd5BDFB
EEC99FC3GGBDGBG

TV6dP5DD>B
EEF7BC7

TV6c Y5ACG9
EE8G7D9

TV6dP5DD>D
EEC7GG7

TV6dP59A>B
EDEACF8

TV6eQ5DCDB
BDB9GFAB3BDBA7779

TV6dP59CFG
EEECABA

TV6eQ5DCDC
BDB9GFAC3BDBA777A

TV6dP59CG8
EEECABB

Y9C88DE
AD79787F3E7EGAB7

TV6dP5BBCB
BDBEDECC

TV6dP5DD>>
EEC7GF9

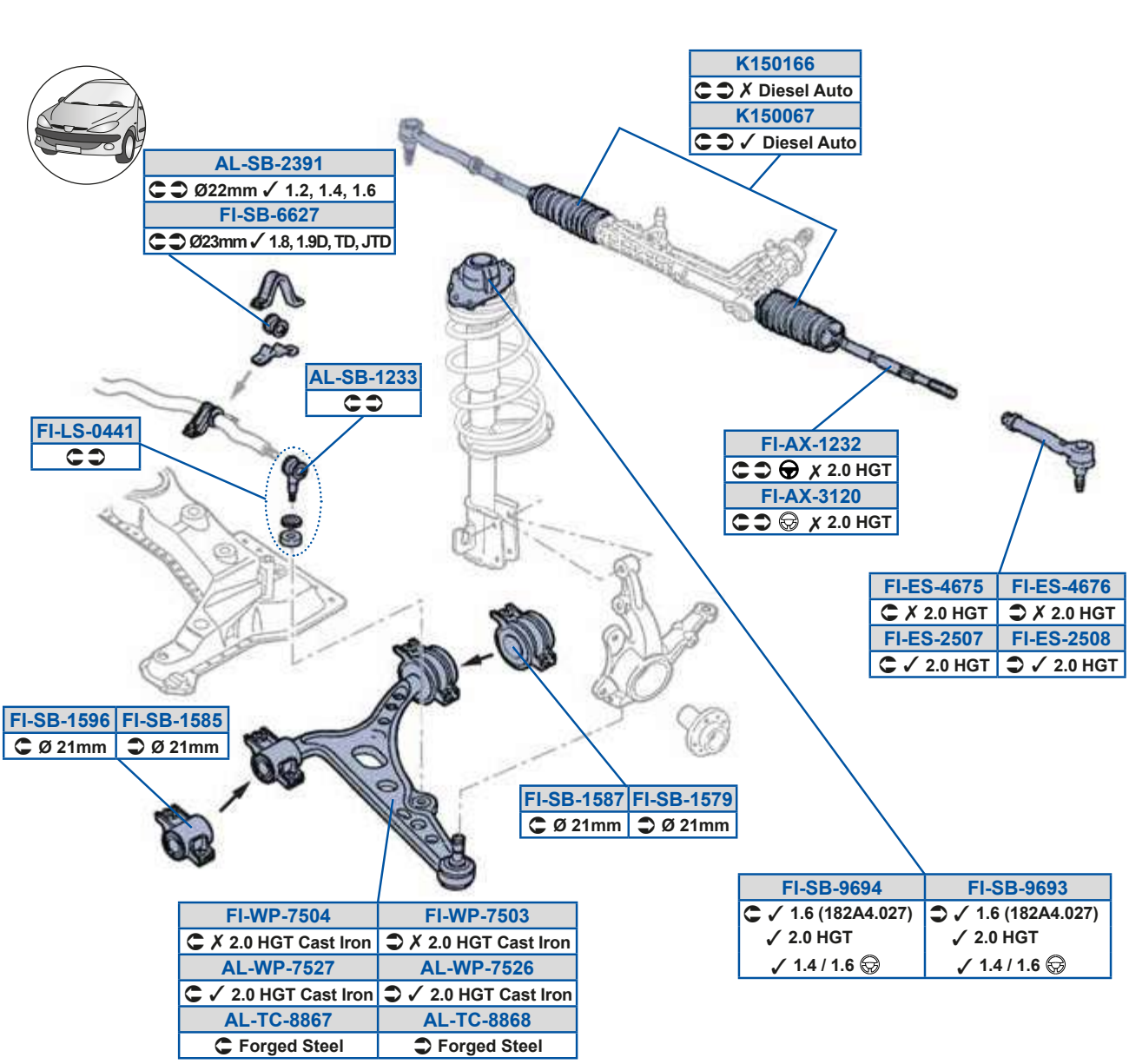
K150166
✗ Diesel Auto
K150067
✓ Diesel Auto
AL-SB-2391
Ø22mm ✓ 1.2, 1.4, 1.6
FI-SB-6627
Ø23mm ✓ 1.8, 1.9D, TD, JTD
AL-SB-1233
FI-LS-0441
FI-AX-1232
✗ 2.0 HGT
FI-AX-3120
✗ 2.0 HGT
FI-ES-4675
✗ 2.0 HGT
FI-ES-4676
✗ 2.0 HGT
FI-ES-2507
✓ 2.0 HGT
FI-ES-2508
✓ 2.0 HGT
FI-SB-1596
Ø 21mm
FI-SB-1585
Ø 21mm
FI-SB-1587
Ø 21mm
FI-SB-1579
Ø 21mm
FI-SB-9694
✓ 1.6 (182A4.027)
✓ 2.0 HGT
✓ 1.4 / 1.6
FI-SB-9693
✓ 1.6 (182A4.027)
✓ 2.0 HGT
✓ 1.4 / 1.6
FI-WP-7504
✗ 2.0 HGT Cast Iron
FI-WP-7503
✗ 2.0 HGT Cast Iron
AL-WP-7527
✓ 2.0 HGT Cast Iron
AL-WP-7526
✓ 2.0 HGT Cast Iron
AL-TC-8867
Forged Steel
AL-TC-8868
Forged Steel

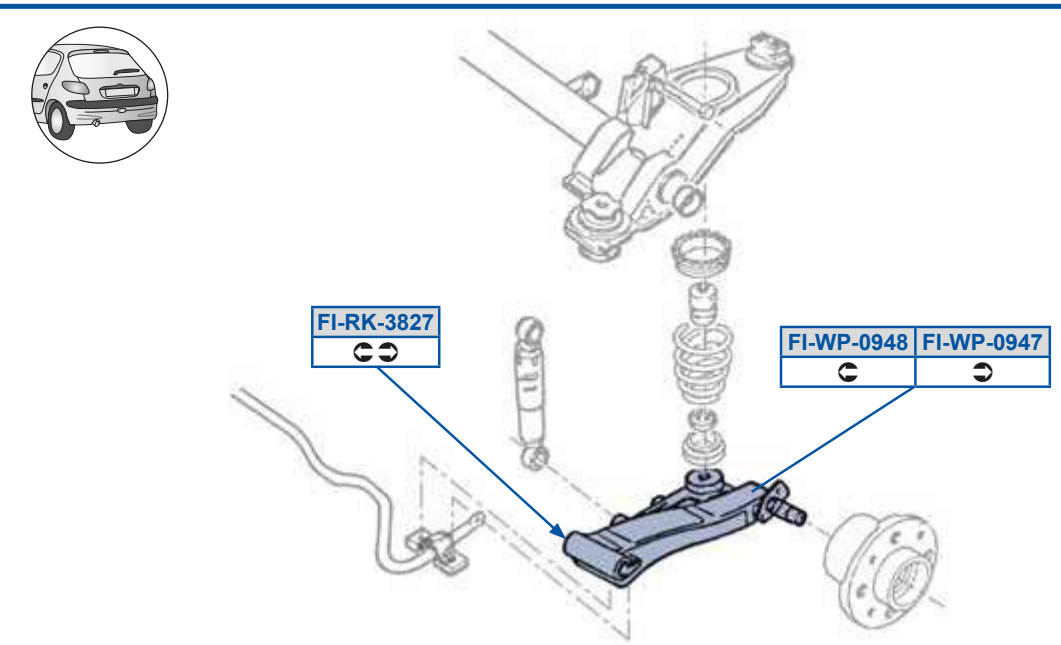
FI-RK-3827
FI-WP-0948
FI-WP-0947

OZ5dP59>AA
D7F7DB7F3ED78DB9

TW5Sd5>C8E
BDB97B9G3GGBEBB7

TW5dP59CFE
ED787DC

TW5h a5EC8B
BDB9AF993E8EBEG8C

OZ5dP5>AG9
CFG98GD3ED9CE8B

TW5Sd5>C8F
BDB97BA73GGBEBB8

TW5dP59CGD
ED787DB

Y9C88DE
AD79787F3E7EGAB7

OZ5eQ5FFDE
BDBD9D9D3BDBEBCCD

TW5Sd5BDEC
ECG898D3GGBEBAC

TW5dP5DD>E
D7F7FCCE3ED78DBD

Y9C89DD
GGBDF8D3GGBEADG

OZ5eQ5FFDF
BDBD9D9E3BDBEBCCD

TW5Sd5BDED
D7F7GBGB3ECBCCFA

TW5dP5GDGA
BDB8B8FA3D7F7DAGF

OZ5h a5EC>D
BDBD9D9E3BDBEBCCD

TW5Zd58BB9
D7CE7D9E3D7F7ECFA

TW5dP5GDGB
BDB8B8FB3D7F7GECA

OZ5h a5EC>E
BDBD9D9D3BDBEBCCD

TW5c Y5AF>E
BDBCGE9A

TW5h a58GBE
BDB7G7GD3BDBCGE97

TW5Oi 59>A>
GGAGDEC3GGB8D9C

TW5dP59CEG
ED787DF

TW5h a58GBF
BDB7G7GC3BDBCGE8G

TW5Oi 5A9>8
CGCF9BB3EDAAE98

TW5dP59CFC
ED787DB

TW5h a5EC8A
BDB9AF9A3E8EBEG8D

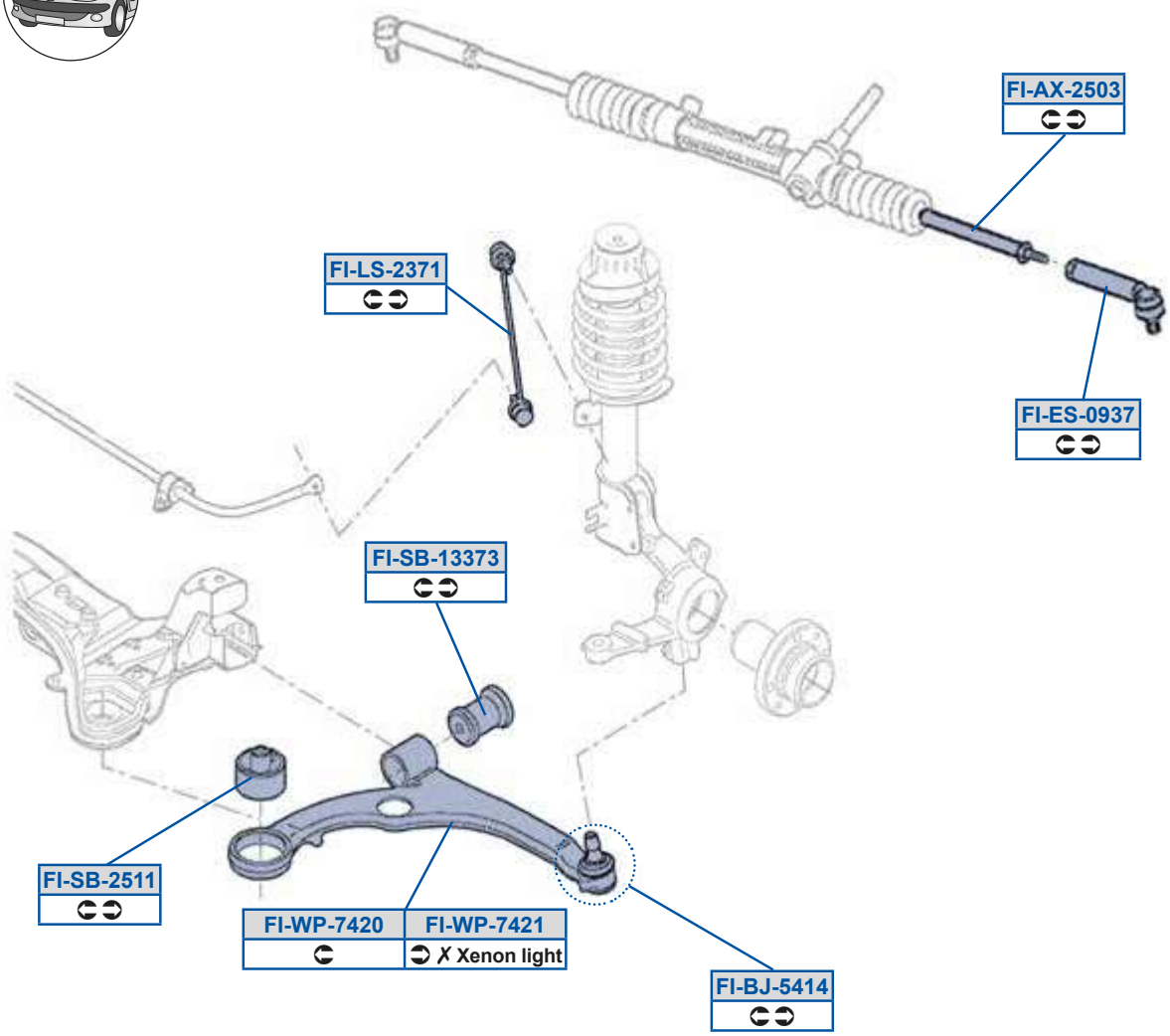
FI-AX-2503
FI-LS-2371
FI-ES-0937
FI-SB-13373
FI-SB-2511
FI-WP-7420
FI-WP-7421
✗ Xenon light
FI-BJ-5414

FI-SB-8781

TV5Oi 5>C8A
GGBG98E

TV5PX5CB9B
C7E7CBDB /40 3C7E7CBDDC /40

TV5Sd58GAE
GGBG98F

TV5Zd5>AE9
C7E77BDB3C7E77GB8

TV5dP59AAEA
C7E7C7FA /40 3C7E7C7FB /40

TV5dP5>C99
C7E77EEF

TV5dP5FEF9
C8FB7D77

TV5h a5EB>8
C7E7CBDB3C8EGC9D7

TV5h a5EB>9
C7E7CBDC3C8F9EEAE

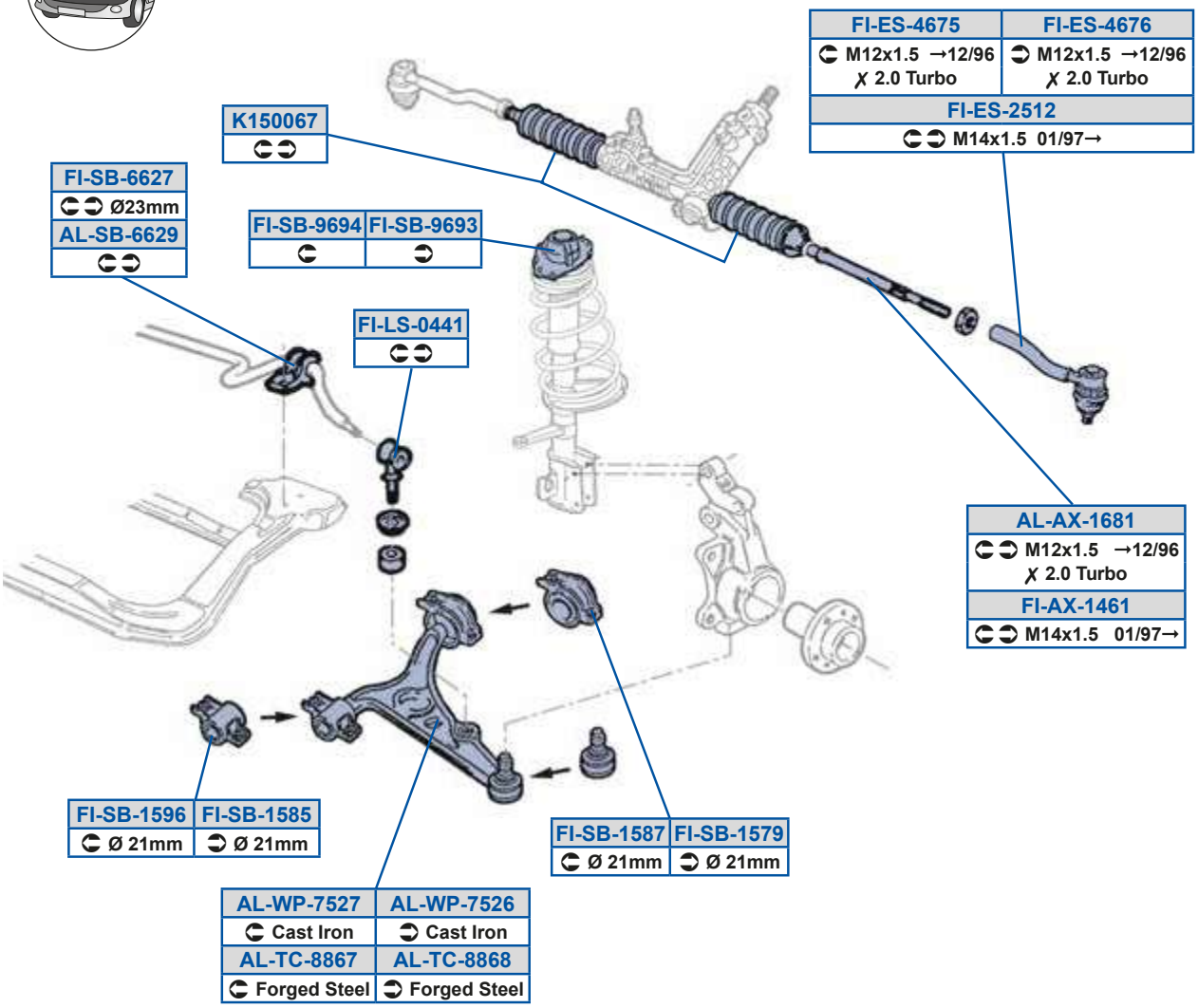
FI-ES-4675
M12x1.5 →12/96
✗ 2.0 Turbo
FI-ES-4676
M12x1.5 →12/96
✗ 2.0 Turbo
FI-ES-2512
M14x1.5 01/97→
K150067
FI-SB-6627
Ø23mm
AL-SB-6629
FI-SB-9694
FI-SB-9693
FI-LS-0441
AL-AX-1681
M12x1.5 →12/96
✗ 2.0 Turbo
FI-AX-1461
M14x1.5 01/97→
FI-SB-1596
Ø 21mm
FI-SB-1585
Ø 21mm
FI-SB-1587
Ø 21mm
FI-SB-1579
Ø 21mm
AL-WP-7527
Cast Iron
AL-WP-7526
Cast Iron
AL-TC-8867
Forged Steel
AL-TC-8868
Forged Steel

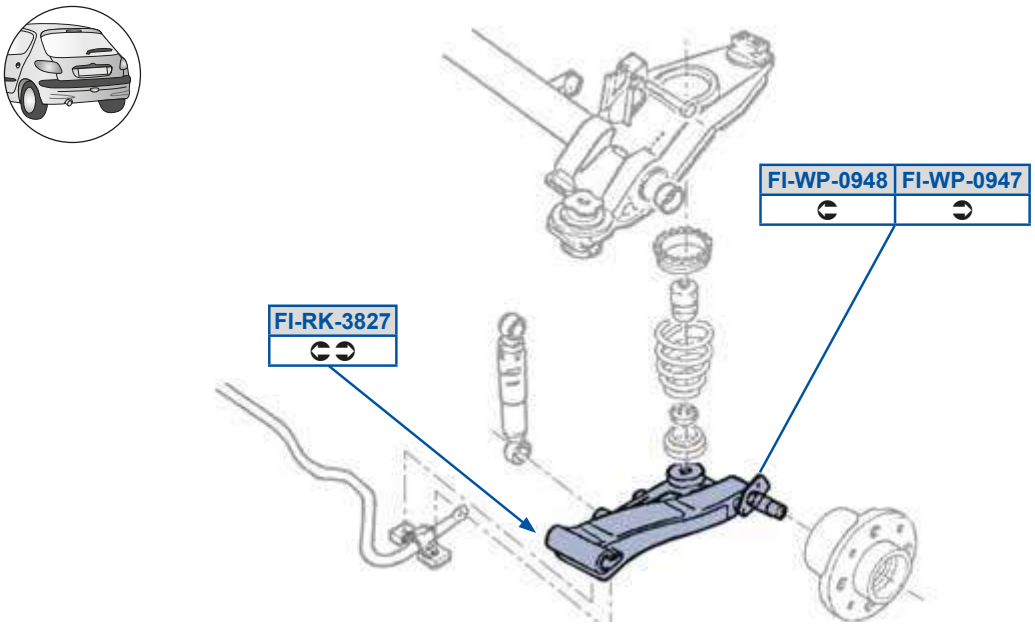
FI-WP-0948
FI-WP-0947
FI-RK-3827

OZ5Oi 59DF9
G7C7BC93GGBBBC9

TW5Sd5BDED
D7F7GBGB3ECBCCFA

TW5dP5GDGA
BDB8B8FA3D7F7DAGF

OZ5eQ5FFDE
BDBD9D9D3BDBEBCCD

TW5ZdB8BB9
D7CE7D9E3D7F7ECFA

TW5dP5GDGB
BDB8B8FB3D7F7GECA

OZ5eQ5FFDF
BDBD9D9E3BDBEBCCD

TW5cY5AF>E
BDBCGE9A

TW5h a58GBE
BDB7G7GD3BDBCGE97

OZ5h a5EC>D
BDBD9D9E3BDBEBCCD

TW5dP59CEG
ED787DF

TW5h a58GBF
BDB7G7GC3BDBCGE8G

OZ5h a5EC>E
BDBD9D9D3BDBEBCCD

TW5dP59CFC
ED787DB

Y9C88DE
AD79787F3E7EGAB7

TW5Oi 59BD9
GGBEE8A

TW5dP59CFE
ED787DC

TW5Sd5>C9>
BDC9ECDE3GFFBC7A7

TW5dP59CGD
ED787DB

TW5Sd5BDEC
ECG898D3GGBEBAC

TW5dP5DD>E
D7F7FCCE3ED78DBD

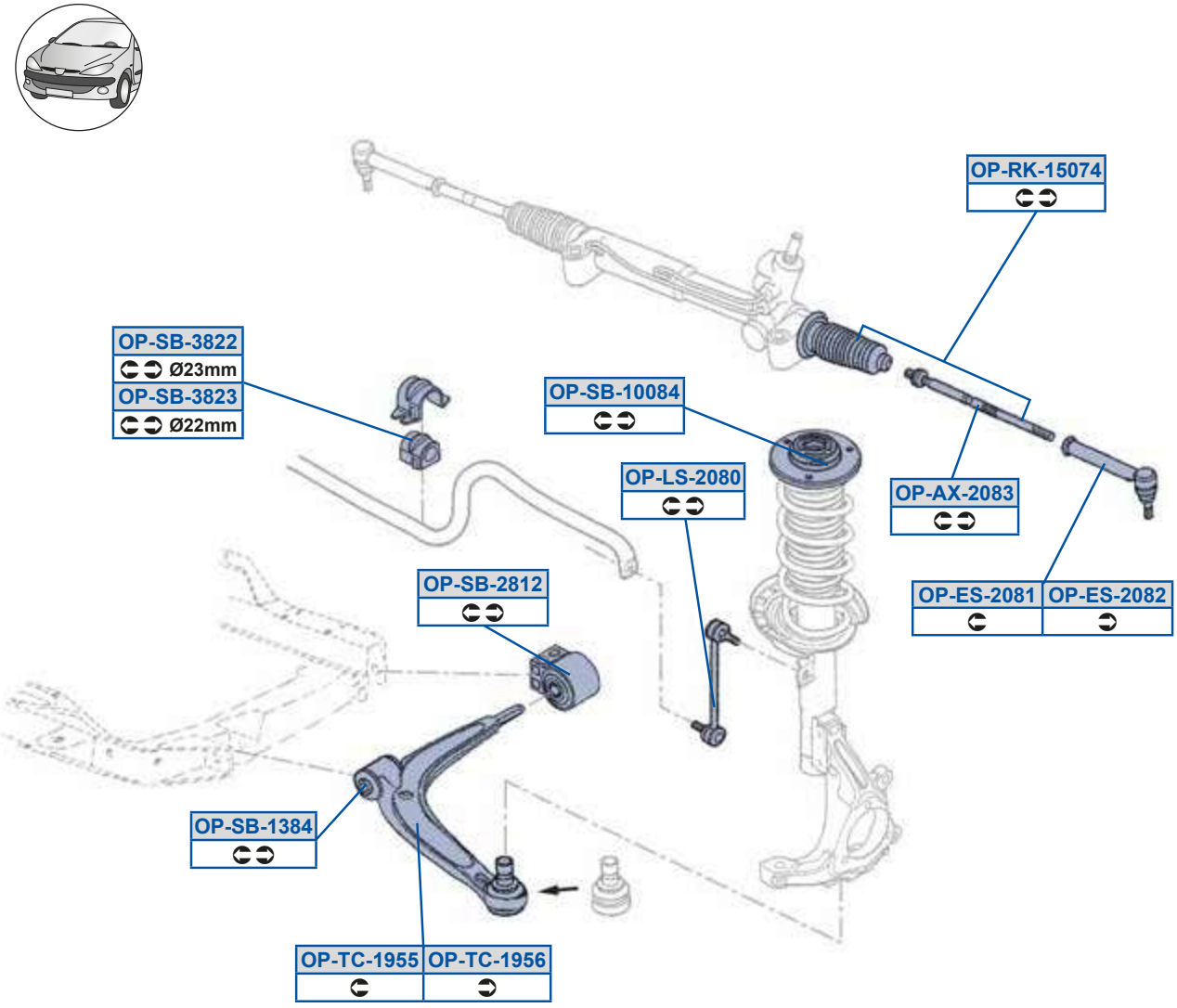
OP-RK-15074
OP-SB-3822
Ø23mm
OP-SB-3823
Ø22mm
OP-SB-10084
OP-LS-2080
OP-AX-2083
OP-SB-2812
OP-ES-2081
OP-ES-2082
OP-SB-1384
OP-TC-1955
OP-TC-1956

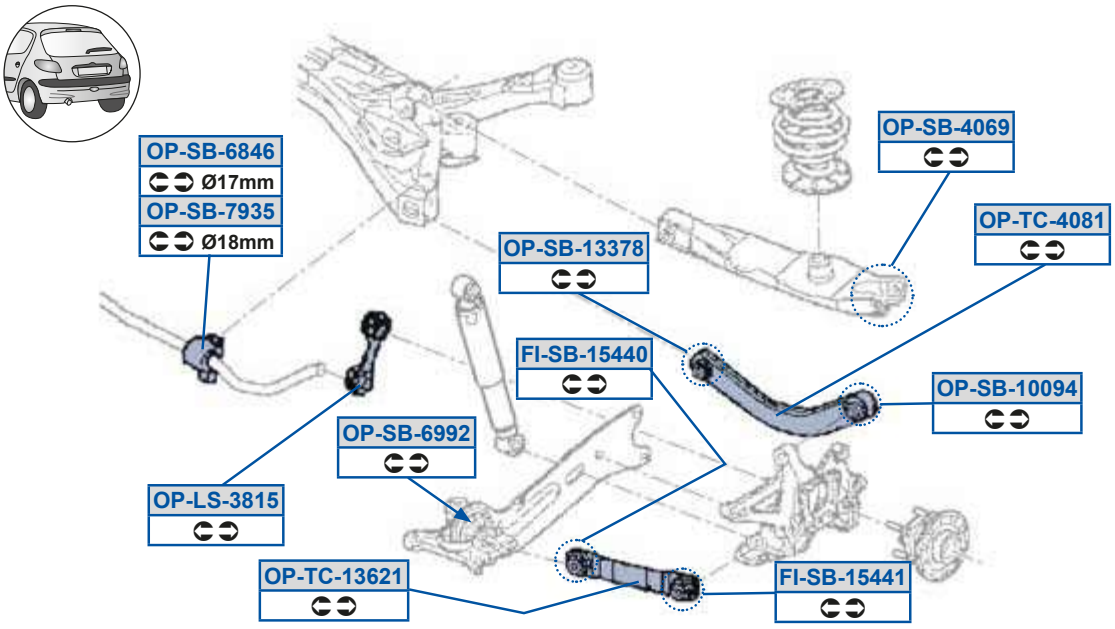
OP-SB-6846
Ø17mm
OP-SB-7935
Ø18mm
OP-SB-4069
OP-TC-4081
OP-SB-13378
FI-SB-15440
OP-SB-10094
OP-SB-6992
OP-LS-3815
OP-TC-13621
FI-SB-15441

TW5dP59CBB8
C8ECCDF8 /40

_ a5dP5988FB
7ABBDDC38A8FFEDA

_ a5dP5DFBD
BBB8D7

TW5dP59CBB9
C8ECCDF8 /40

_ a5dP5988GB
C8EFA77G /40

_ a5dP5DGG>
89ECDAGC389EGC79B

_ a5Oi 5>8FA
8D7A99G

_ a5dP59AAEF
C8EBFEB7 /40 3C8EFA77G /40

_ a5dP5EGAC
9BBCEAFD3BBB8D8

_ a5Sd5>8F9
EEADAE8A

_ a5dP59AFB
AC9ACE3AC9ADB

_ a5eQ59AD>9
C8ECCDF8

_ a5Sd5>8F>
EEADAE89

_ a5dP5>F9>
E8EB787E

_ a5eQ59GCC
C8EBFDCA

_ a5Zd5>8F8
C8EB88A73C8F7A8FA

_ a5dP5AF>>
AC78BC3AC78D7

_ a5eQ59GCD
C8EBFDC9

_ a5Zd5AF9C
E8EB7889

_ a5dP5AF>A
9BB9F7793AC78BD

_ a5eQ5B8F9
C8EBFEB73C8EFA77G

_ a5cY59C8EB
8D7A99G

_ a5dP5B8DG
9BBDGDBA3B9AA97

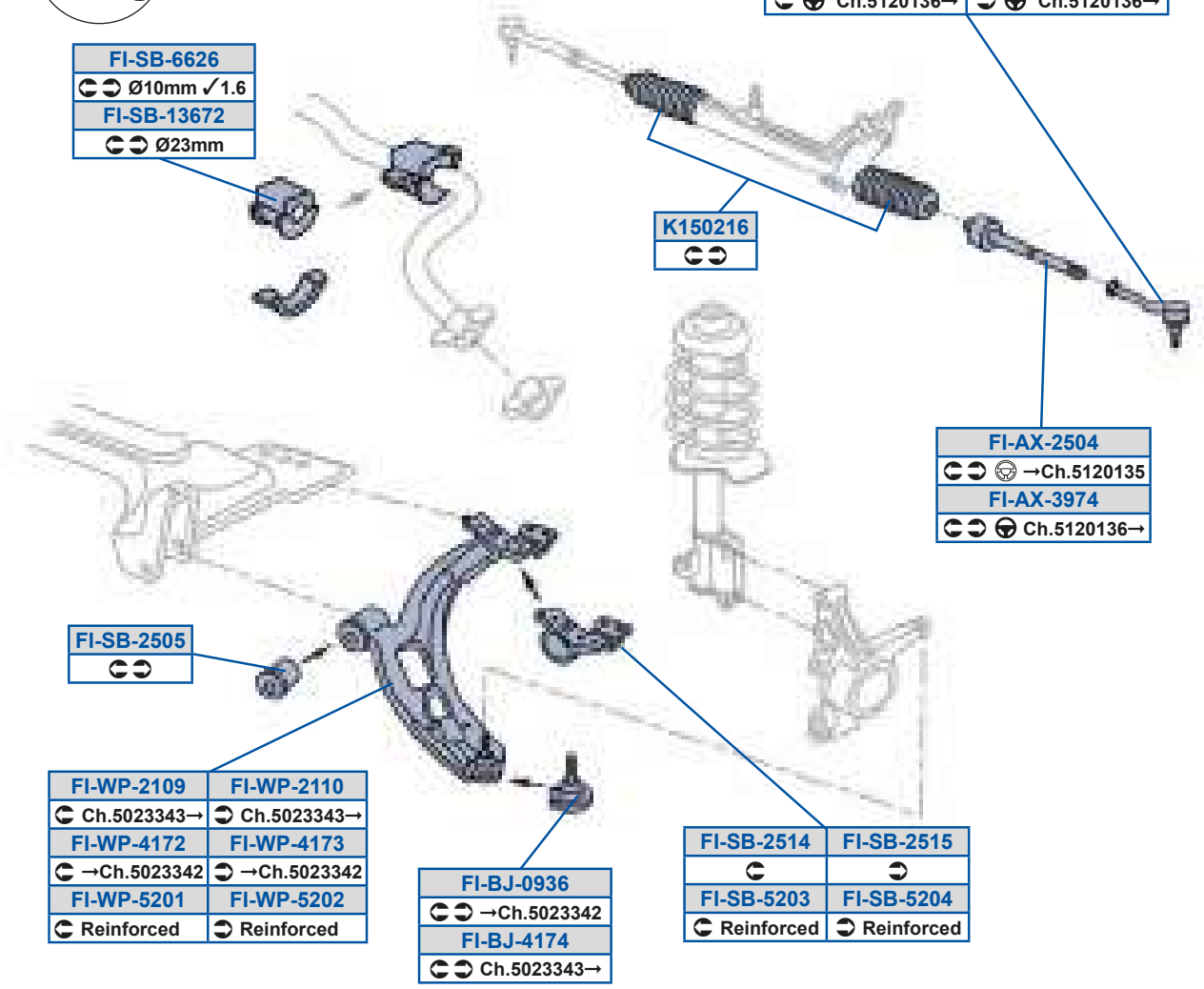
FI-ES-2512
→Ch.5120135
FI-ES-0241
Ch.5120136→
FI-ES-0242
Ch.5120136→
FI-SB-6626
Ø10mm ✓1.6
FI-SB-13672
Ø23mm
K150216
FI-AX-2504
→Ch.5120135
FI-AX-3974
Ch.5120136→
FI-SB-2505
FI-WP-2109
Ch.5023343→
FI-WP-2110
Ch.5023343→
FI-WP-4172
→Ch.5023342
FI-WP-4173
→Ch.5023342
FI-WP-5201
Reinforced
FI-WP-5202
Reinforced
FI-BJ-0936
→Ch.5023342
FI-BJ-4174
Ch.5023343→
FI-SB-2514
FI-SB-2515
FI-SB-5203
Reinforced
FI-SB-5204
Reinforced

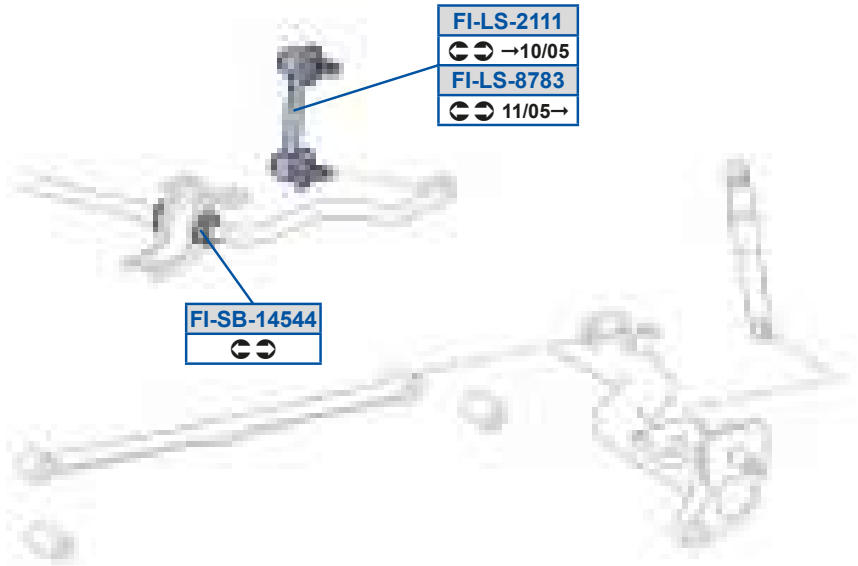
FI-LS-2111
→10/05
FI-LS-8783
11/05→
FI-SB-14544

TV50i 5>C8B
GFFBC79B3GFFBC79C

TV5Zd5FEFA
BDEDE9DE3BDEGG9EF

TV5dP5DD>D
EEC7GG7

TV50i 5AGEB
GFFBC79D

TV5dP59ADE>
BDEAFF7E3BDEG7CC9

TV5h a5>98G
C8EE9GG93C8EE9GGA

TV5PX58GAD
BDCBA7BC3BDEEG9GA

TV5dP59BCBB
BDEDE9D9

TV5h a5>998
C8EE9GFF3C8EE9GFG

TV5PX5B9EB
BDEEG9GA3BDFB9CF8

TV5dP5>C8C
BDB98C99

TV5h a5B9E>
BDCAG7783BDEBFCF8

TV5Sd58>B9
BDBCD8FG3BDEBCADC

TV5dP5>C9B
BDEBFCEF

TV5h a5B9EA
BDCAG7773BDEBFCF7

TV5Sd58>B>
BDBCDDD73BDEBCADB

TV5dP5>C9C
BDEBFCEG

TV5h a5C>89
C8E9EFDC3GFF878B7

TV5Sd5>C9>
BDC9ECDE3GFFBC7A7

TV5dP5C>8A
C8E9EFDC /40

TV5h a5C>8>
C8E9EFDA

TV5Zd5>999
BDEDE9DE3BDEGG9EF

TV5dP5C>8B
C8E9EFDA /40

Y9C8>9D
GFFBC7AB

R_PZ_ P P w 7S t x Q DAr 1	8; 798	R_PZ_ [ag Q DAr 1	9978G
R_PZ_ a t y 7QÉt é Q DAr 1	8; 798		

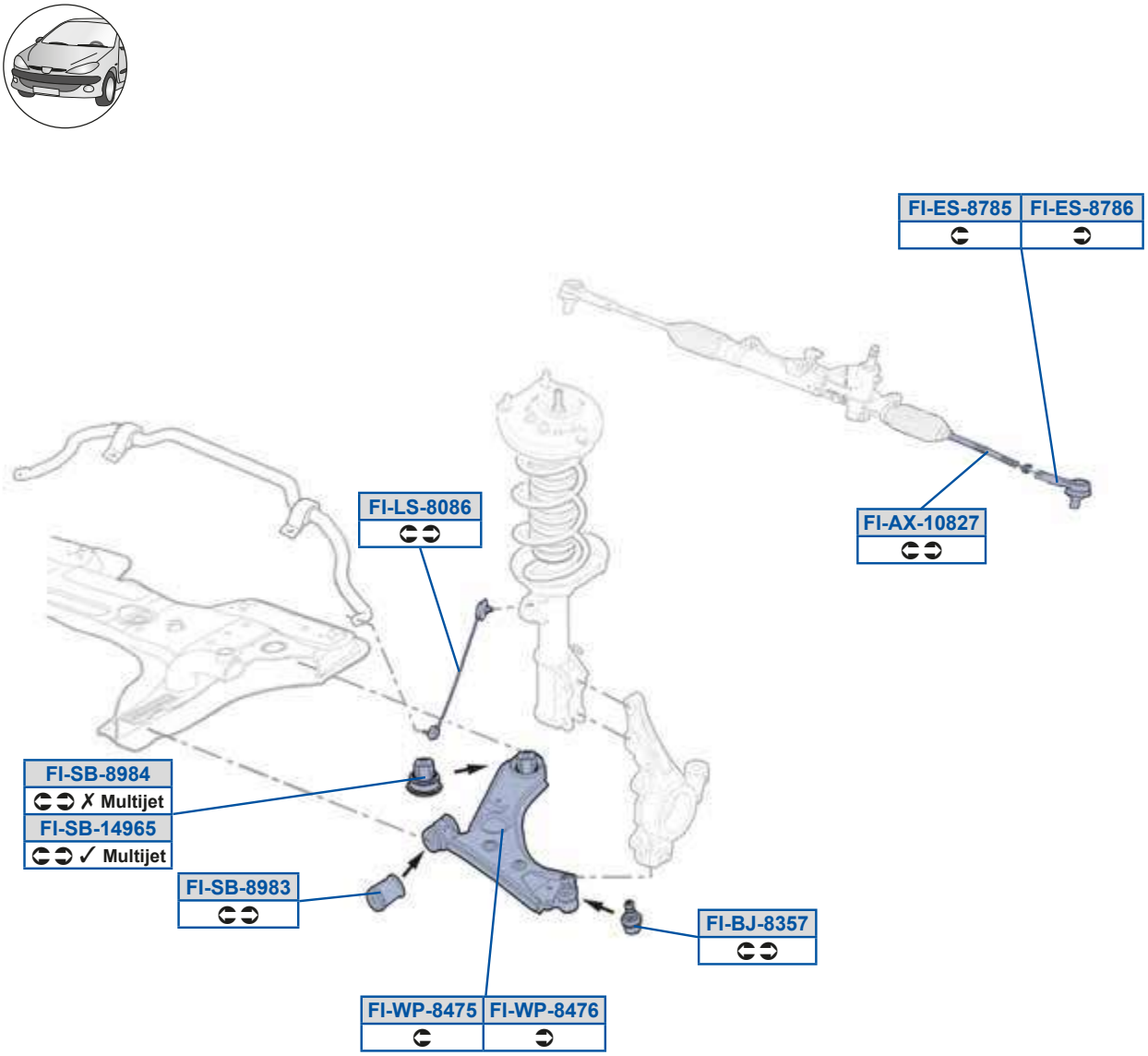

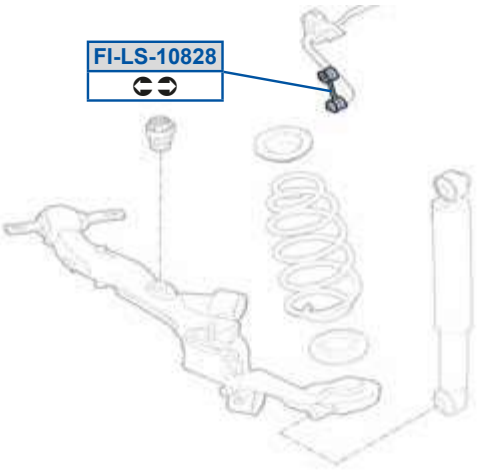

TV6Oi 598F>E
GFFBCFEF

TV6dP5FGFB
C8F87DDB/403C8F87DDC/40

TV6PX5FACE
C8F87DDB/40

TV6h a5FBEC
C8F87DDC3C8GA97AC

TV6Sd5FEFC
EEADC99A

TV6h a5FBED
C8F87DDB3C8GA97AD

TV6Sd5FEFD
EEADC99B

TV6Zd598F>F
C8F8789B

TV6Zd5F8FD
C8FBFDBC3C8FGFC9E

TV6dP59BGDC
C8FFCDD7/403C8FFCEAC

TV6dP5FGFA
C8F87DDB/403C8F87DDC/40

Rf QOe_ P 0, A8r 1	987GE 8B78;	Rf QOe_ P 0, A8Z1	8A7GB 8B78;
Rf QOe_ P 0, BB1	8B78;	Rf QOe_ P 0, BBr 1	8B78; 8E78D
Rf QOe_ P 0, A81	8A7GB 8B78;	Rf QOe_ P 0, A8r 1	8B7GE 8B78;
Rf QOe_ P 0, BBr 1	8C78; 8E78D	Rf QOe_ P 0, BB4I r 1	8B78;
Rf QOe_ a t y 7QÉt é 0, A81	8A7GB 8B78;	Rf QOe_ a t y 7QÉt é 0, A8r 1	8A7GB 8B78;
Rf QOe_ a t y 7QÉt é 0, BBr 1	8B78; 8E78D		

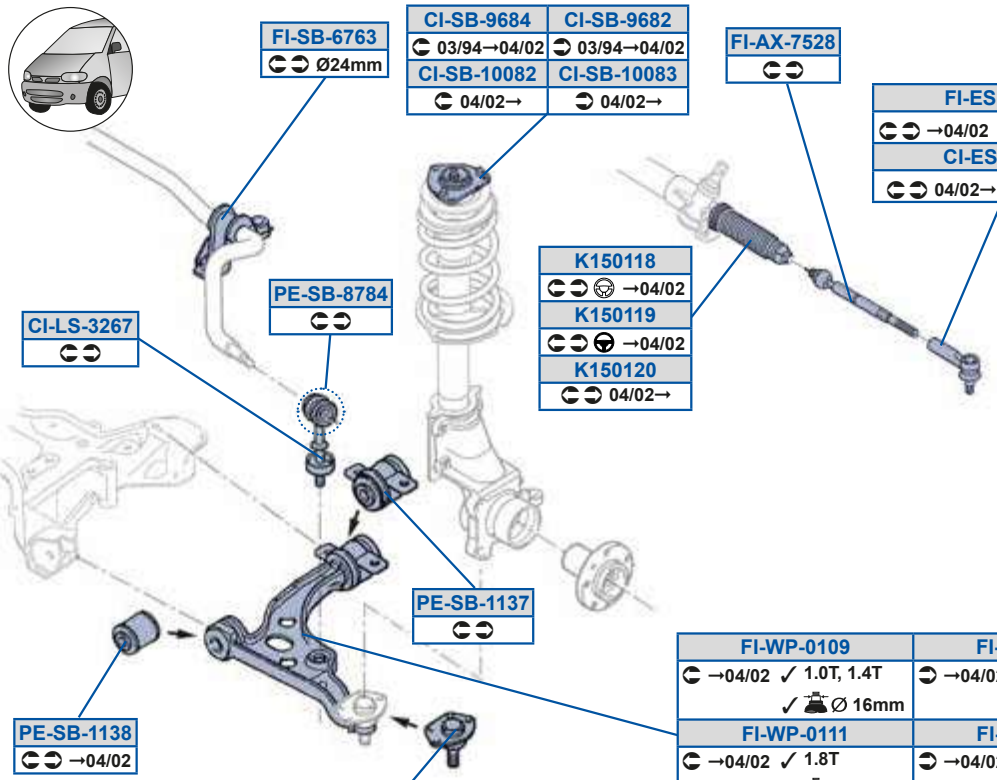

FI-WP-0109 →04/02 ✓ 1.0T, 1.4T ✓ Ø 16mm	FI-WP-0108 →04/02 ✓ 1.0T, 1.4T ✓ Ø 16mm
FI-WP-0111 →04/02 ✓ 1.8T ✓ Ø 18mm	FI-WP-0110 →04/02 ✓ 1.8T ✓ Ø 18mm
FI-WP-3840 04/02→ ✓ 1.0T, 1.4T ✓ Ø 18mm	FI-WP-0118 04/02→ ✓ 1.0T, 1.4T ✓ Ø 18mm
CI-WP-3876 04/02→ ✓ 1.8T ✓ Ø 20mm	CI-WP-3877 04/02→ ✓ 1.8T ✓ Ø 20mm

FI-BJ-7530 →04/02 ✓ 1.0T, 1.4T Ø 16mm	FI-BJ-0512 04/02→ ✓ 1.0T, 1.4T Ø 18mm
FI-BJ-7531 →04/02 ✓ 1.8T Ø 18mm	FI-BJ-0513 04/02→ ✓ 1.8T Ø 20mm

CI-SB-7966

CI-SB-7967

QV5Sd5>BD8
EEAD99EF

QV5h a5AFED
8A97ECC7F738AA8GAE7F7

TV5dP5DEDA
EED7B9D

Y9C899G
GGBCFAE

QV5Zd5A>DE
8A77E8D7F7

QV5h a5AFEE
8A97ECD7F738AA8GAG7F7

TV5h a5898F
8A7FD787F738A8E9B87F7

Y9C89>8
GGBCFAE

QV5dP5988F>
C7A8EF3C7AFDF

TV5Oi 5EC>F
8BE8DCB7F73GGBCFAD

TV5h a5898G
8A7FD777F738A8E9B77F7

aS5dP599AE
8A7FDGB7F738AAFAEA7F7

QV5dP5988FA
C7A8EG

TV5PX58C9>
8AA8DB77F7

TV5h a58998
8A7FED77F738A8E9AG7F7

aS5dP599AF
AC9AGA

QV5dP5EGDD
C8A8E9

TV5PX58C9A
8A77BEA7F738AA8DB87F7

TV5h a58999
8A7FECG7F738A8E9AF7F7

aS5dP5FEFB
8A8A7CD7F7

QV5dP5EGDE
8A7BDB87F73C8A8EA

TV5PX5ECA8
8A79ADF7F7

TV5h a5899F
8A97EFE7F738AA8GB77F7

QV5dP5GDF>
C7AF8G3C7AFB9

TV5PX5ECA9
8A77BEA7F7

TV5h a5AFB8
8A97EFD7F738AA8GAF7F7

QV5dP5GDFB
C7AF8F3C7AFB8

TV5Sd5EC>G
8A7DE8D7F7

Y9C899F
GGBDGF9

Rf Q0e_ P Q, C81	8E78D	Rf Q0e_ P Q, C81	8E78D
Rf Q0e_ a t y 7QÉt é Q, C81	8E78D		

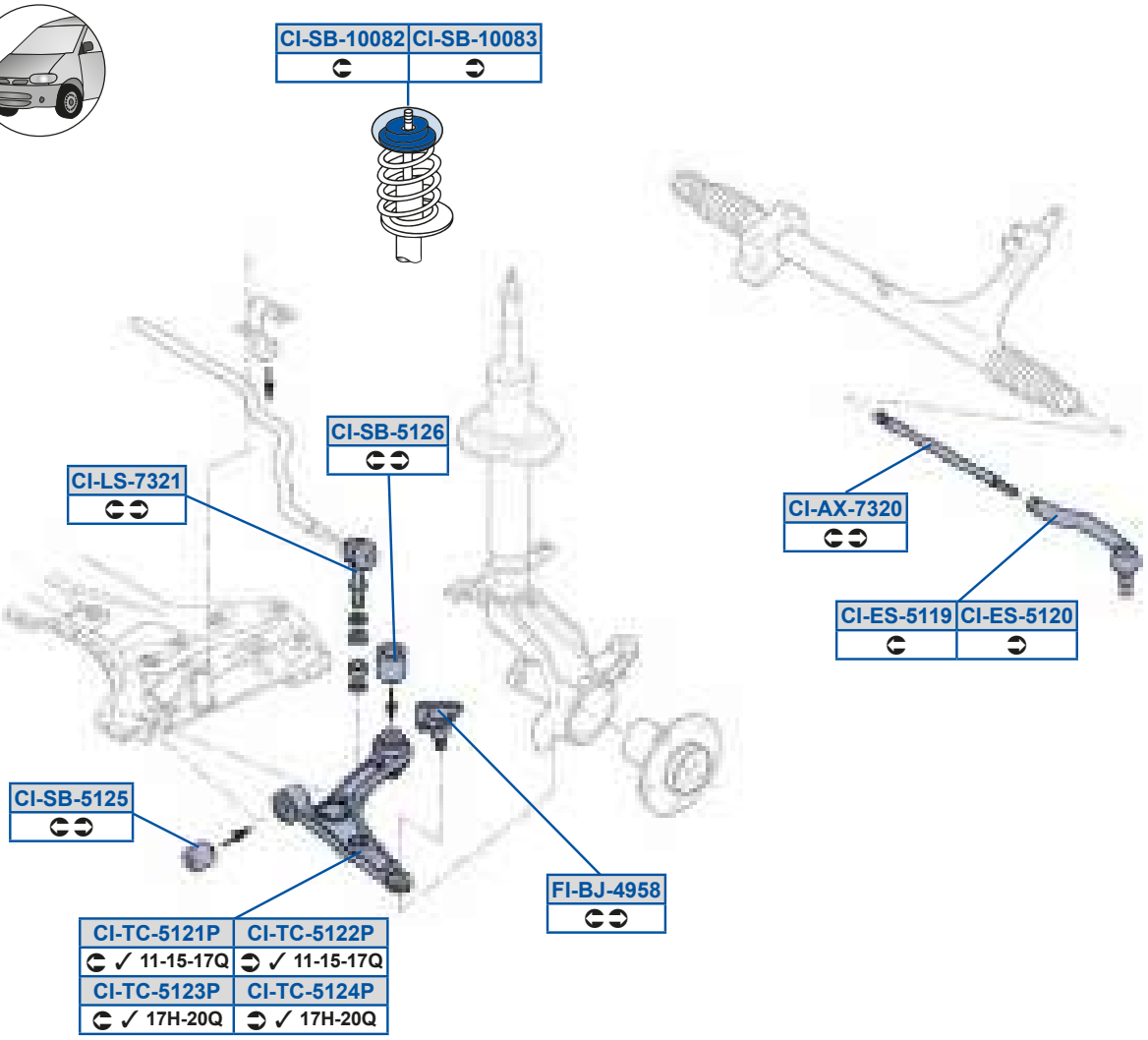

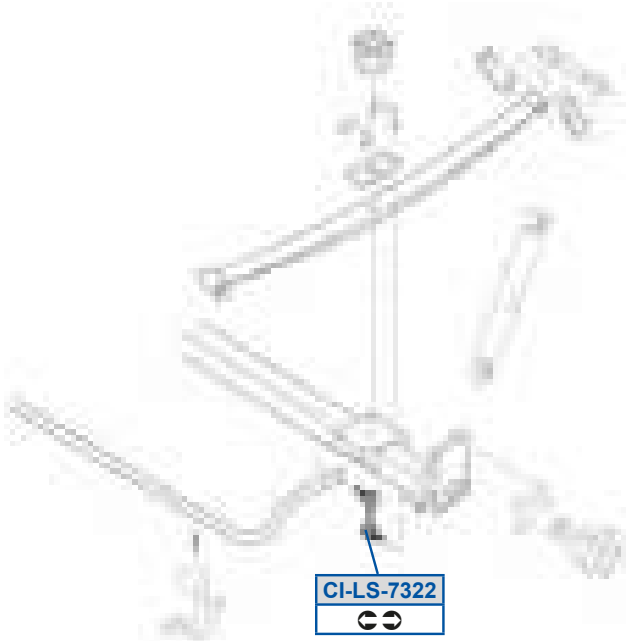

MOOG

QV5Oi 5EA>8
8ADGGBA7F738ADGGBA7F7o8

QV5Sd5C99G
8AEDABD7F73EEADB9CA

QV5Sd5C9>8
8AEDABC7F73EEADB77G

QV5Zd5EA>9
C7F8Z8 /40 3C7F8dG /40

QV5Zd5EA>>
8ACCBBG7F7

QV5dP5988F>
C7A8EF3C7AFDF

QV5dP5988FA
C7A8EG

QV5dP5C9>C
8AC999C7F7 /40

QV5dP5C9>D
8AC999C7F7 /40

TV5PX5BGCF
C7E7CD9G3GAC78FAE

R tr WW3E7>88D5L1

TWDe

TWcW_ P 09BD1	897FF 8C789	TWcW_ aév 09BD1	897FF 8C789

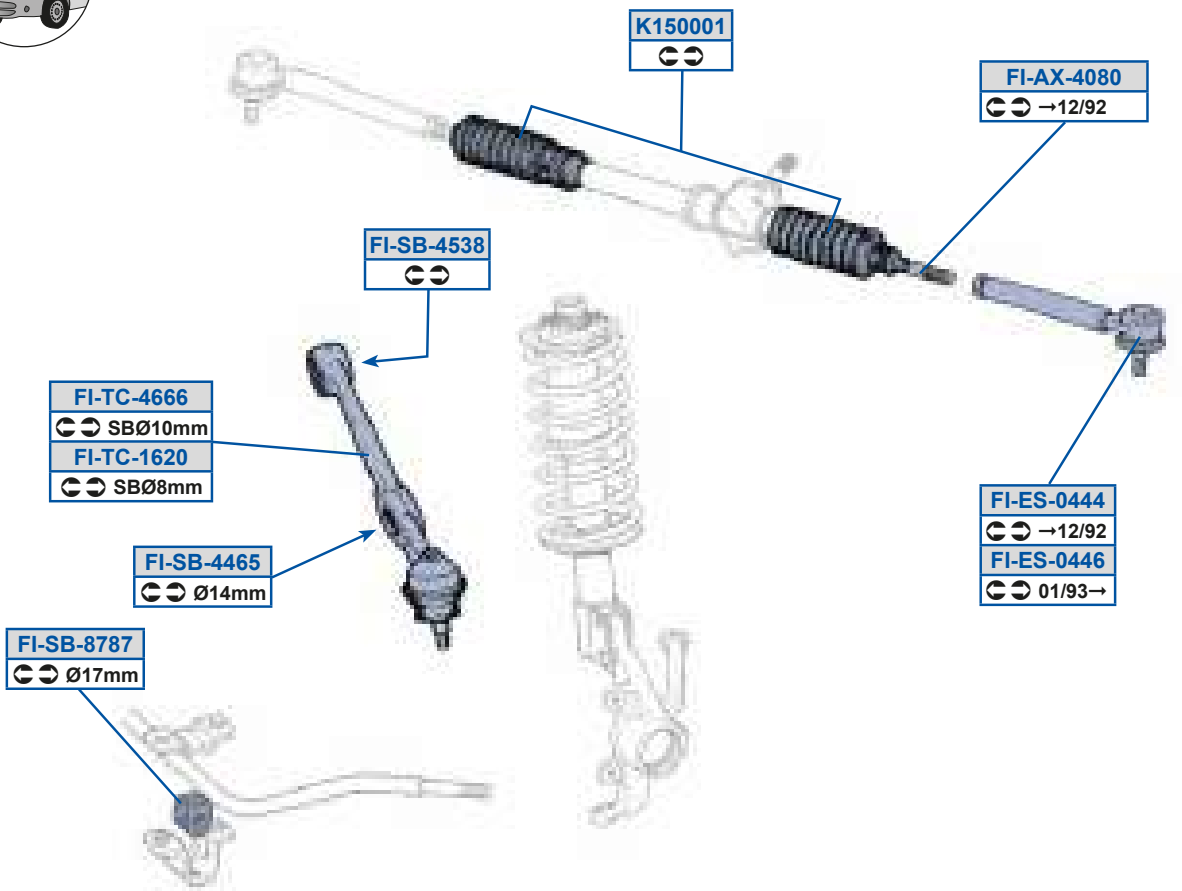

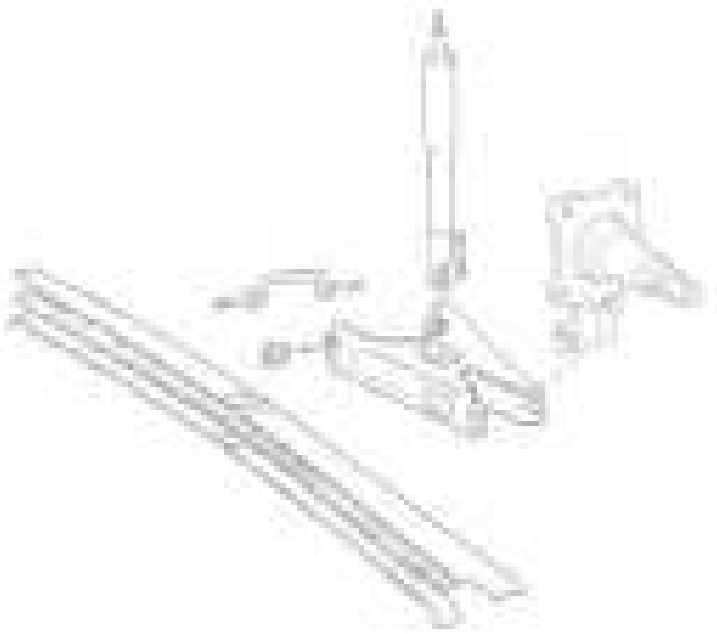

TV50i 5AFCA
E7ED9A8

TV50i 5BFDF
E7EE97D

TV5Sd53BBD
C777D9D83C777D9D9

TV5dP5BBDC
ECBBEAF

TV5dP5BCAF
EDEBE78

TV5dP5FEFE
EECEFEB

TV5eQ59D>8
ECAD9E83EDEBF9C

TV5eQ5BDDD
ECBAED3ECBAED7

Y9C8889
88BC7GF99388BC7GF9A

TWcWJ_P P w 7S t x Q ; C1	9978E		

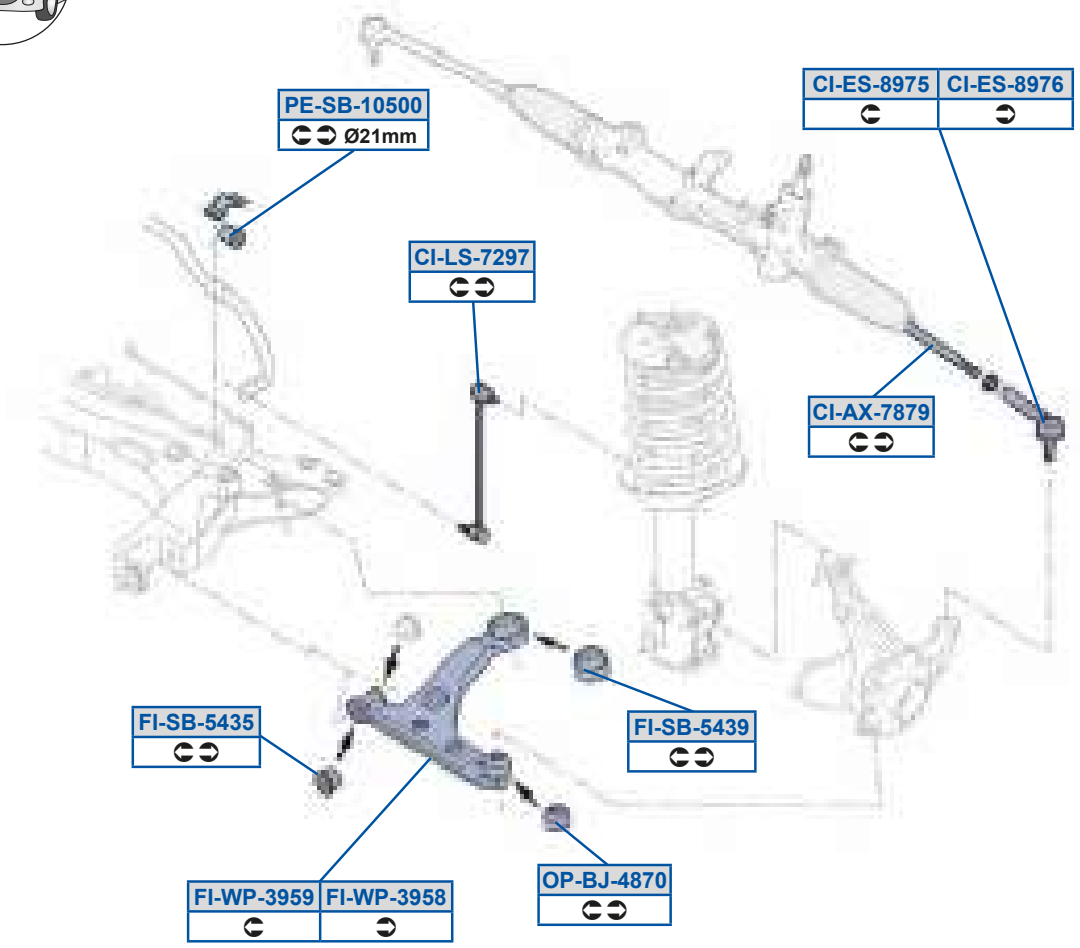

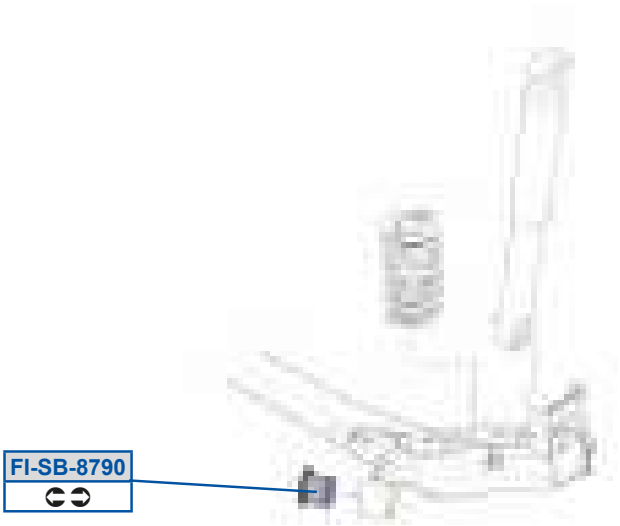

QV5Oi 5EFEG

QV5Sd5FGEC

AF8EFB3AF8EFD

QV5Sd5FGED

AF8EFC3AF8EFE

QV5Zd5E>GE

C8E7B77F3C8F8CBEG

TV5dP5CBAC

AC9AF73CCE7A9A9

TV5dP5CBAG

CCE77EC8

TV5dP5FEG8

C8EFAD9A

TV5h a5AGCF

C8EFA7CD3C8FAG7AG

TV5h a5AGCG

C8EFA7CE3C8FAG7B7

_ a5PX5BFE8

AC97DE3AC97FE

aS5dP598C88

C8EFCBFF

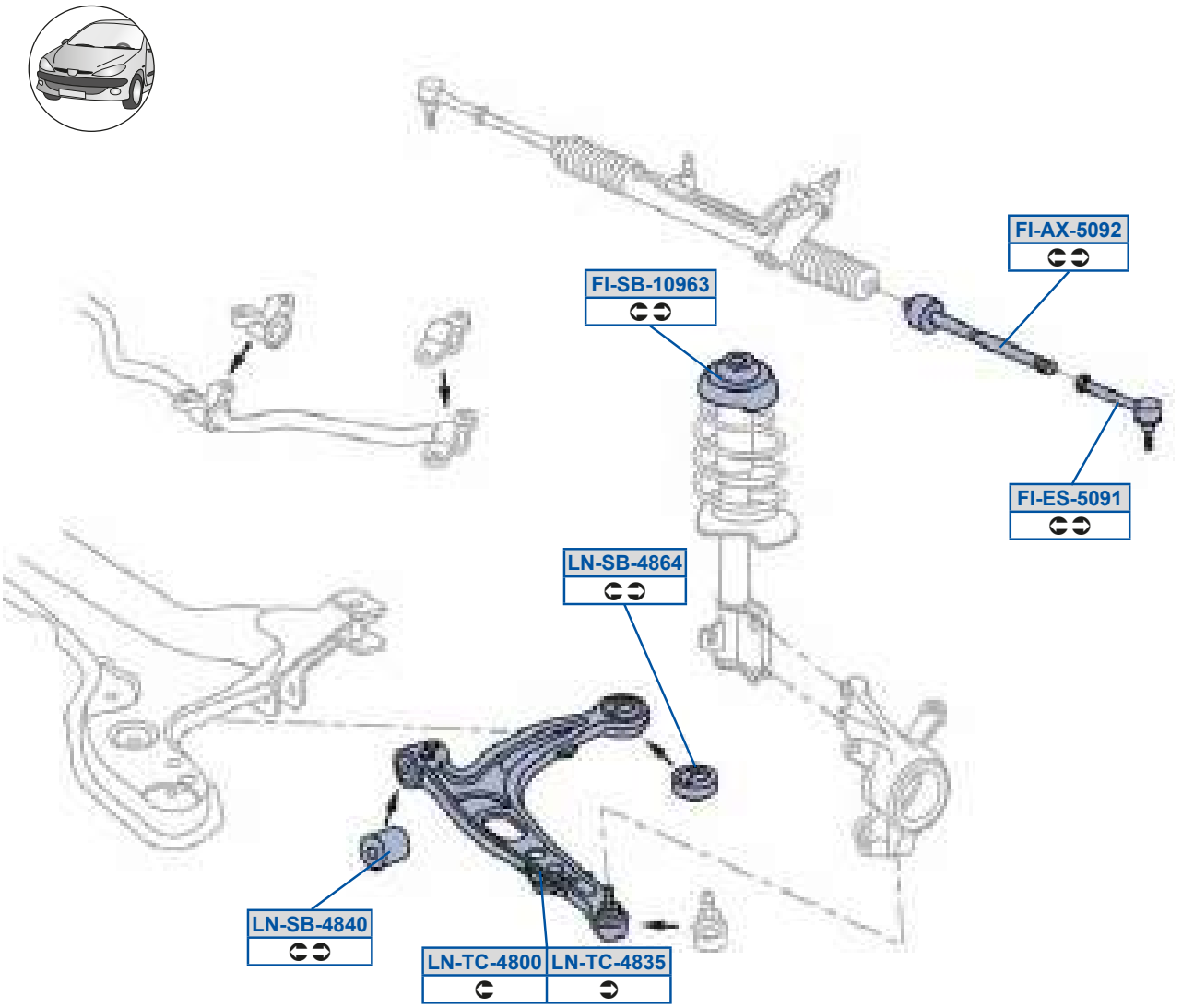
FI-AX-5092
FI-SB-10963
FI-ES-5091
LN-SB-4864
LN-SB-4840
LN-TC-4800
LN-TC-4835

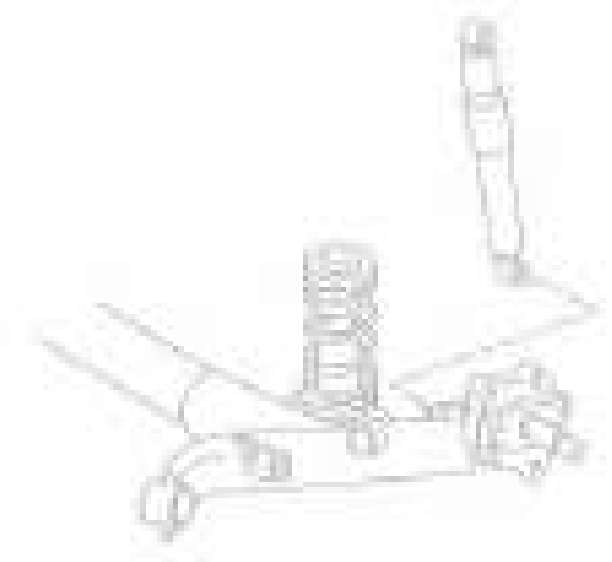

TV6Oi 5C8G>
EEAD9C79

TV6Sd5C8G9
EEAD9C7A

TV6dP598GDA
BDEBDCBB

Z] 5dP5BFB8
C7E7A9A8 /4C3C7E7A9A9 /4C

Z] 5dP5BFDB
C7E7A9A8 /4C3C7E7A9A9 /4C

Z] 5eQ5BF88
C7E7A9A93C8FAG98G

Z] 5eQ5BFAC
C7E7A9A83C8FAG98F

ZWSO 0A; A1	8D78E	ZWSO 0A; Ar 1	8G78E

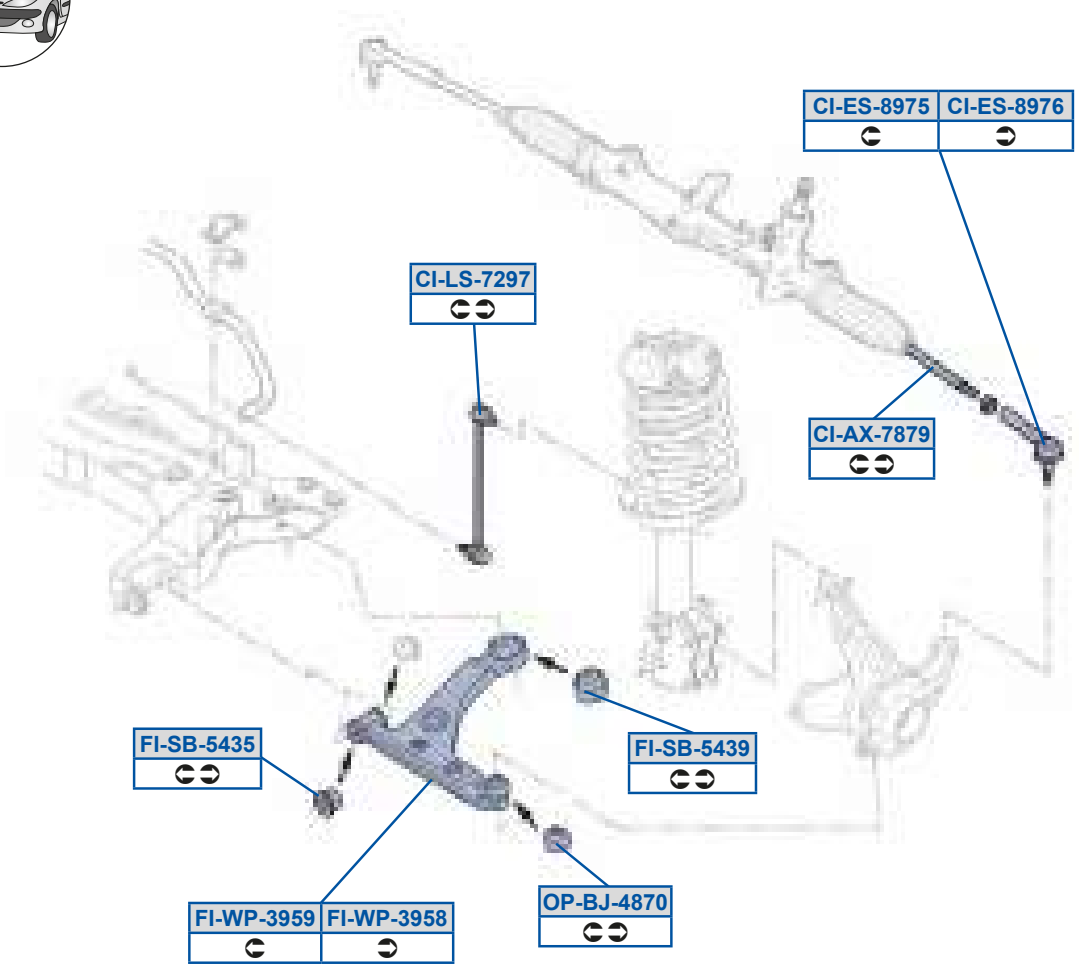

QV5Oi 5EFEG

QV5Sd5FGEC

AF8EFB3AF8EFD

QV5Sd5FGED

AF8EFC3AF8EFE

QV5Zd5E>GE

C8E7B77F3C8F8CBEG

TV5dP5CBAC

AC9AF73CCE7A9A9

TV5dP5CBAG

CCE77EC8

TV5h a5AGCF

C8EFA7CD3C8FAG7AG

TV5h a5AGCG

C8EFA7CE3C8FAG7B7

_ a5PX5BFE8

AC97DE3AC97FE

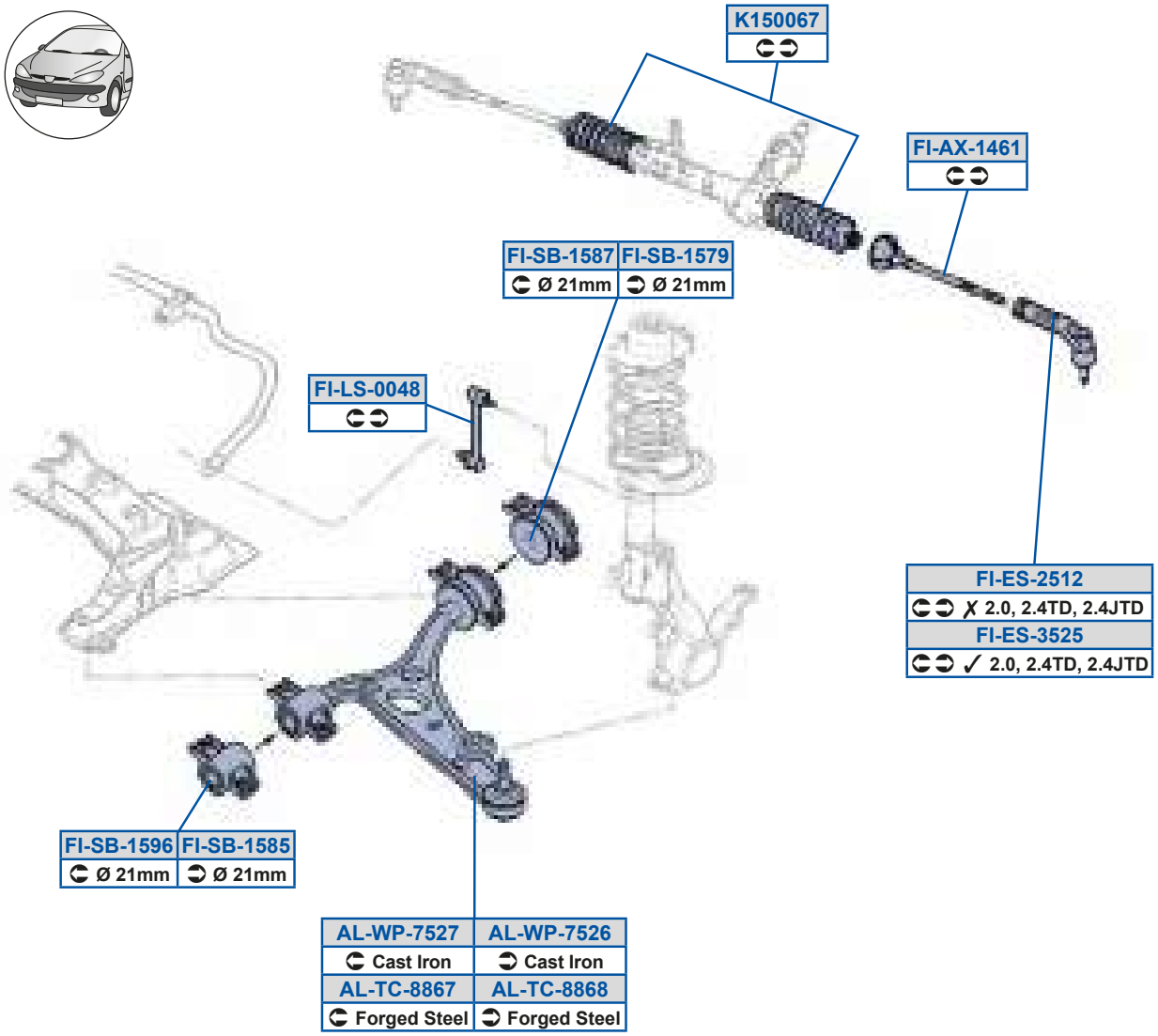
K150067
FI-AX-1461
FI-SB-1587 | FI-SB-1579
Ø 21mm | Ø 21mm
FI-LS-0048
FI-ES-2512
✗ 2.0, 2.4TD, 2.4JTD
FI-ES-3525
✓ 2.0, 2.4TD, 2.4JTD
FI-SB-1596 | FI-SB-1585
Ø 21mm | Ø 21mm
AL-WP-7527 | AL-WP-7526
Cast Iron | Cast Iron
AL-TC-8867 | AL-TC-8868
Forged Steel | Forged Steel

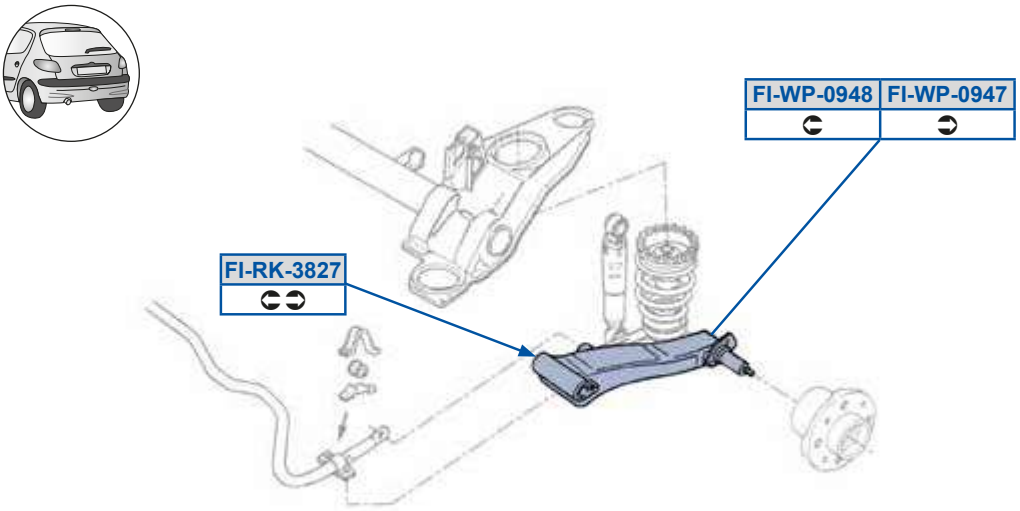
FI-WP-0948 | FI-WP-0947
FI-RK-3827

OZ5eQ5FFDE
BDBD9D9D3BDBEBCCD

TW5cY5AF>E
BDBCGE9A

OZ5eQ5FFDF
BDBD9D9E3BDBEBCCD

TW5dP59CEG
ED787DF

OZ5ha5EC>D
BDBD9D9E3BDBEBCCD

TW5dP59CFC
ED787DB

OZ5ha5EC>E
BDBD9D9D3BDBEBCCD

TW5dP59CFE
ED787DC

TW5Oi59BD9
GGBEE8A

TW5dP59CGD
ED787DB

TW5Sd5>C9>
BDC9ECDE3GFFBC7A7

TW5ha58GBE
BDB7G7GD3BDBCGE97

TW5Sd5AC>C
GGBEE973GGBEG9D

TW5ha58GBF
BDB7G7GC3BDBCGE8G

TW5Zd588BF
BDB8A8993BDCBCEBA

Y9C88DE
AD79787F3E7EGAB7

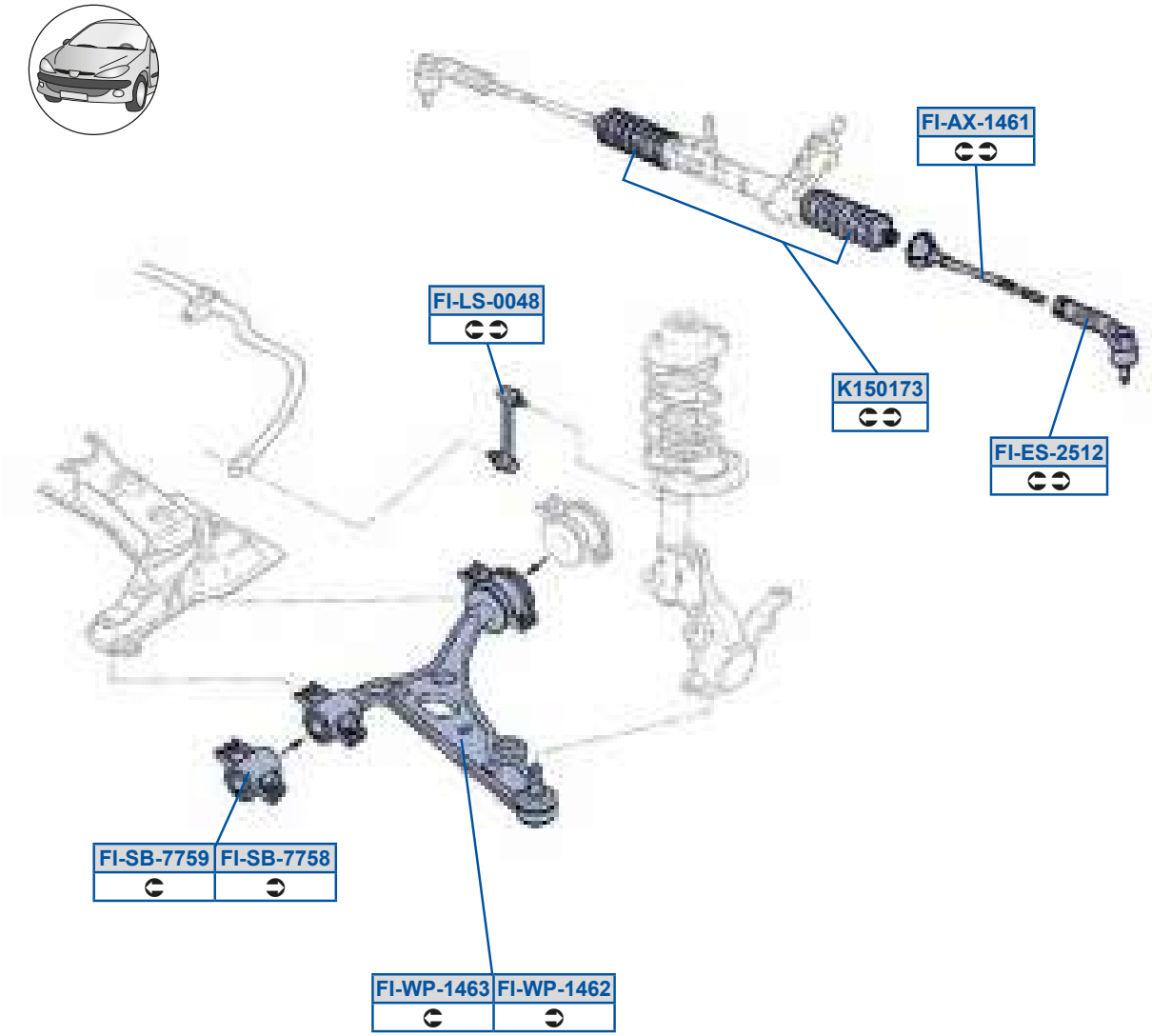
FI-AX-1461
FI-LS-0048
K150173
FI-ES-2512
FI-SB-7759
FI-SB-7758
FI-WP-1463
FI-WP-1462

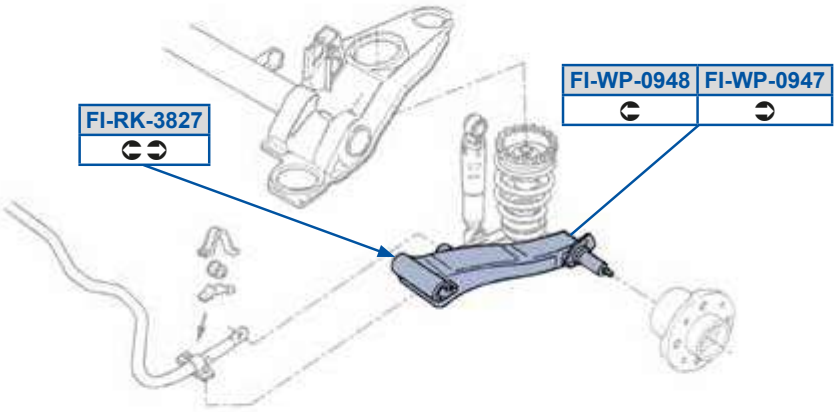
FI-RK-3827
FI-WP-0948
FI-WP-0947

TV5Oi 59BD9
GGBEE8A

TV5Sd5>C9>
BDC9ECDE3GFFBC7A7

TV5Zd588BF
BDB8A8993BDCBCEBA

TV5c Y5AF>E
BDBCGE9A

TV5d P5EECF
BDEDBEBD /40 3BDEDBEBE /40

TV5d P5EECG
BDEDBEBD /40 3BDEDBEBE /40

TV5h a58GBE
BDB7G7GD3BDBCGE97

TV5h a58GBF
BDB7G7GC3BDBCGE8G

TV5h a59BD>
BDC998B93BDEDBEBE

TV5h a59BDA
BDC9CB7E3BDEDBEBD

Y9C89EA
BCCAC7C7873EF977B7DAF

aOZW 09EFr 1	8B7GD	aOZW h xx x w09EFRi 1	8B7GD
dW3] 0 09EFr 17OZPS0 09EFr 1	8B7GD 8; 78A	aOZW h xx x w09EFr 1	8; 7GE
dW3] 0 09EFr 49E; r 1	8A78; 9; 78G		

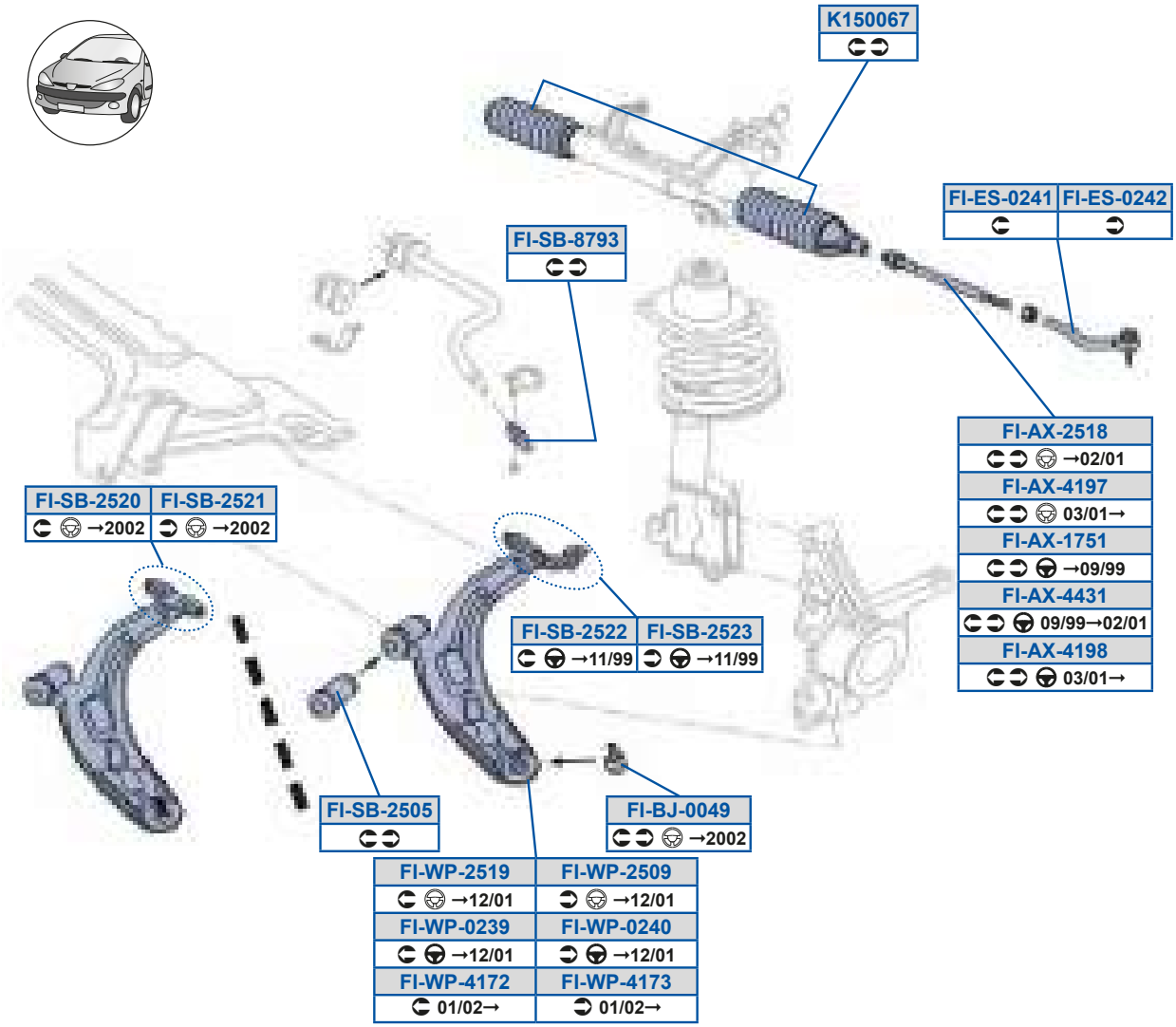

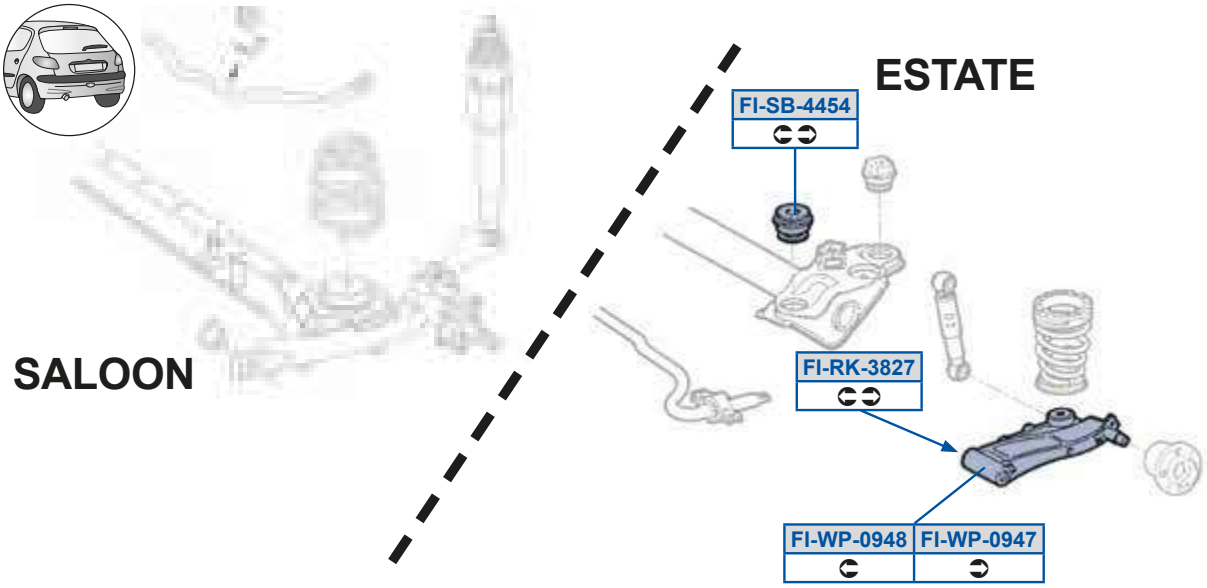

TV50i 59EC9
E7EGAF9

TV5c Y5AF>E
BDBCGE9A

TV5h a58>AG
BDBCBCGE3BDCAG9EF

TV50i 5>C9F
E7EGAFF

TV5dP5>C8C
BDB98C99

TV5h a58>B8
BDBCBCGF3BDCAG9EG

TV50i 5B9GE
E7F8FB9

TV5dP5>C>8
BDBCBCGC/40BDBCBCGD/40

TV5h a5>C8G
BDBCBCGD3BDCBDEEB

TV50i 5B9GF
E7F8FC8

TV5dP5>C>9
BDBCBCGC/40BDBCBCGD/40

TV5h a5>C9G
BDBCBCGC3BDCBDEEC

TV50i 5BBA9
GGBF9G9

TV5dP5>C>>
BDBCBCGE/40BDBCBCGF/40

TV5h a5B9E>
BDCAG7783BDEBFCF8

TV5PX588BG
BDBAEGCG3BDBCBCGG

TV5dP5>C>A
BDBCBCGE/40BDBCBCGF/40

TV5h a5B9EA
BDCAG7773BDEBFCF7

TV5Sd58>B9
BDBCD8FG3BDEBCADC

TV5dP5BBCB
BDBEDECC

Y9C88DE
AD79787F3E7EGAB7

TV5Sd58>B>
BDBCDDD73BDEBCADB

TV5dP5FEGA
EC97FC7

a0] RO 09DG1	8G78A	a0] RO gt 09DG1	8A78B
a0] RO gt 09DGr 1	9878B		

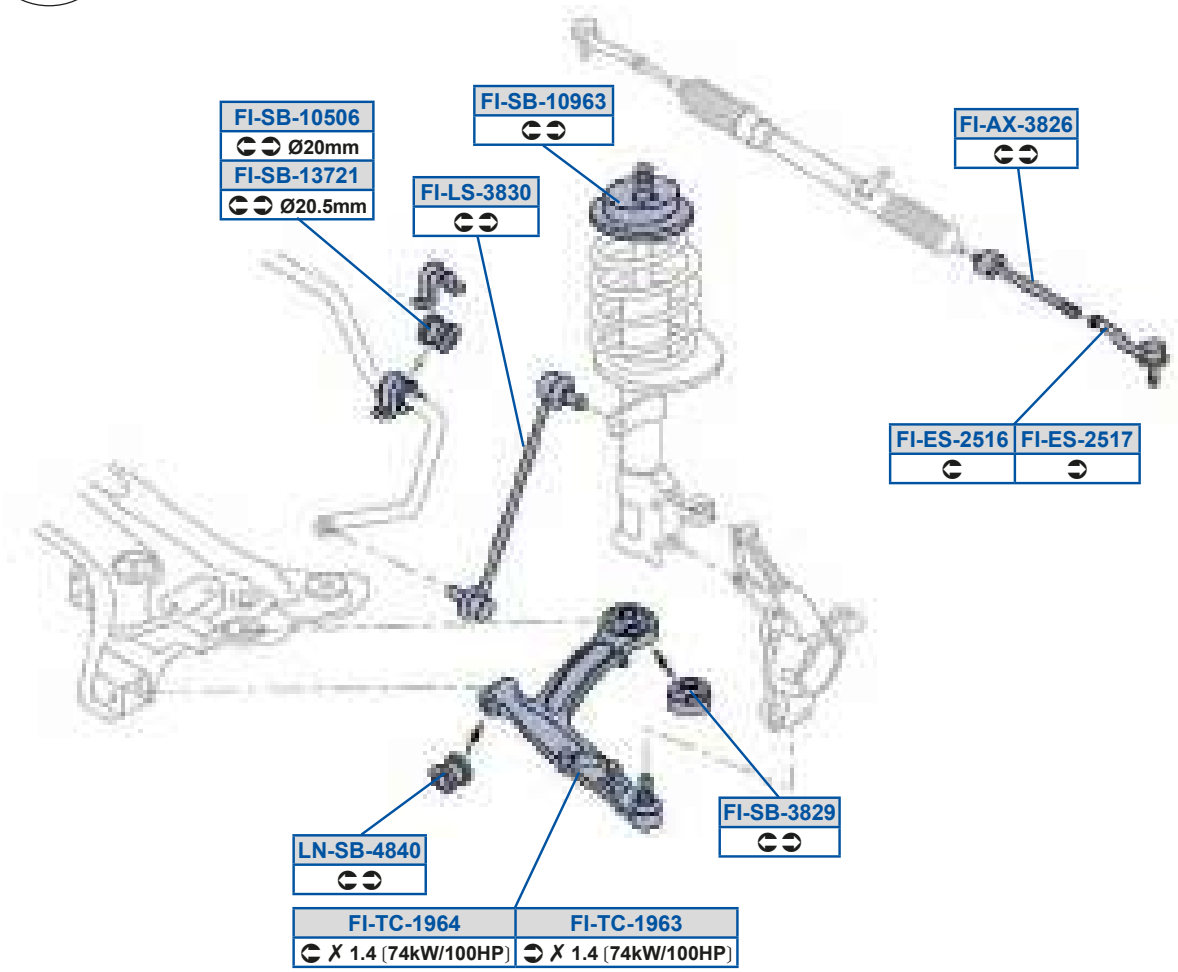

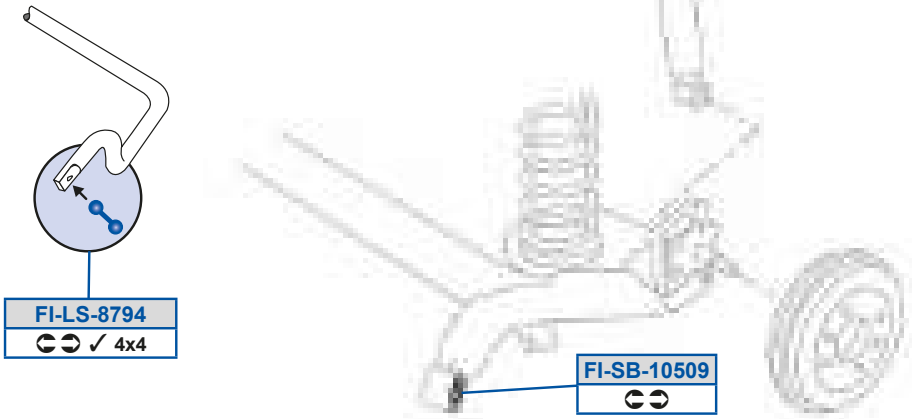

MOOG

TV6Oi 5AF>D
EEAD9C7D

TV6dP59AE>9
C7E7CGBB3C8FCDFE7

TV6Sd5>C9D
EEAD9C7E3EEADE778

TV6dP5AF>G
C7E7A89F /4C3C7E7A89G /40

TV6Sd5>C9E
EEAD9C7F3EEADE779

TV6eQ59GDA
C7E7A89G3C8FCE8AB

TV6Zd5AFA8
C7E7A9GD3C8FCDFE9

TV6eQ59GDB
C7E7A89F3C8FCE8AA

TV6Zd5FEGB
C7E7BDE83C8FCDGCG

Z] 5dP5BFB8
C7E7A9A8 /4C3C7E7A9A9 /40

TV6dP598C8D
C7E788EF3C7E7CGBA

TV6dP598C8G
BDEB8G973BDED89EG

TV6dP598GDA
BDEBDCBB

a0] RO 0A9; r 4A9Gr 1	8; 79;	a0] RO g0] 0A9; r 4C9Gr 1	8; 79;

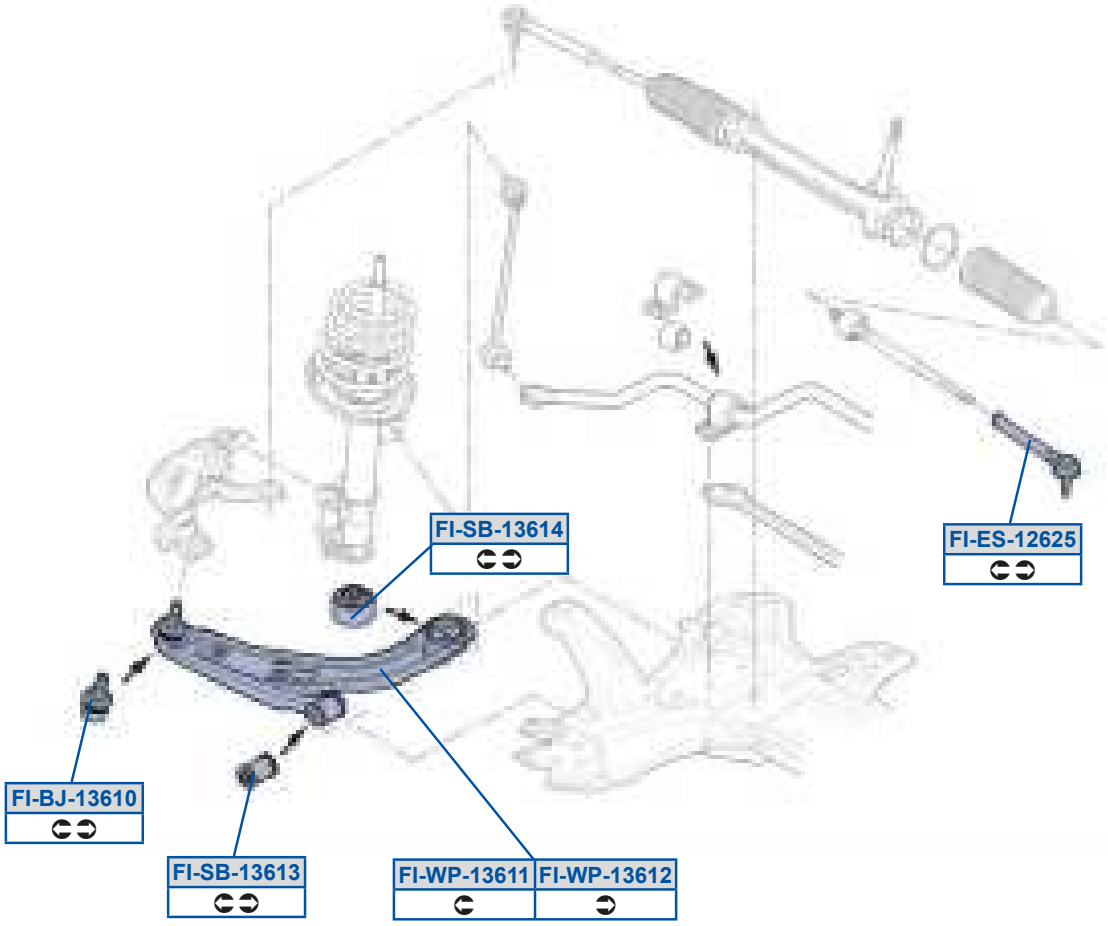

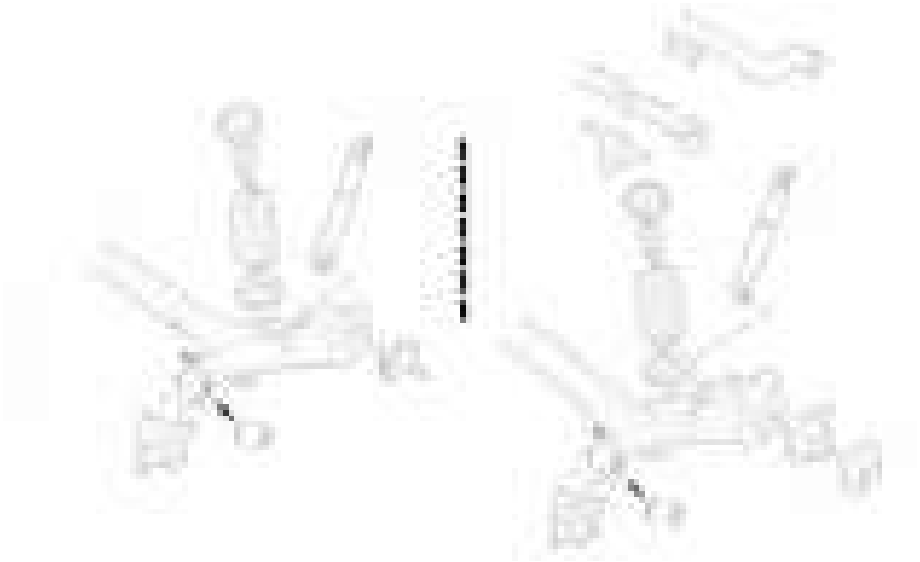

TV5P X59AD98

C8G9FC9E /40 3C8G9FCAD /40

TV5Sd59>D>C

EEADCF8C

TV5dP59AD9A

C8G9FCAD6C9E /40

TV5dP59AD9B

C8G9FCAD6C9E /40

TV5h a59AD99

C8FBGD793C8G9FCAD

TV5h a59AD9>

C8FBGD773C8G9FC9E

af] e_ gt 09EDZ1	8B7GD 8; 788	af] e_ 09ED1	8G7GA 8G7GG
af] e_ Q x ú x 09EDQ1	8B7GB 8D788		

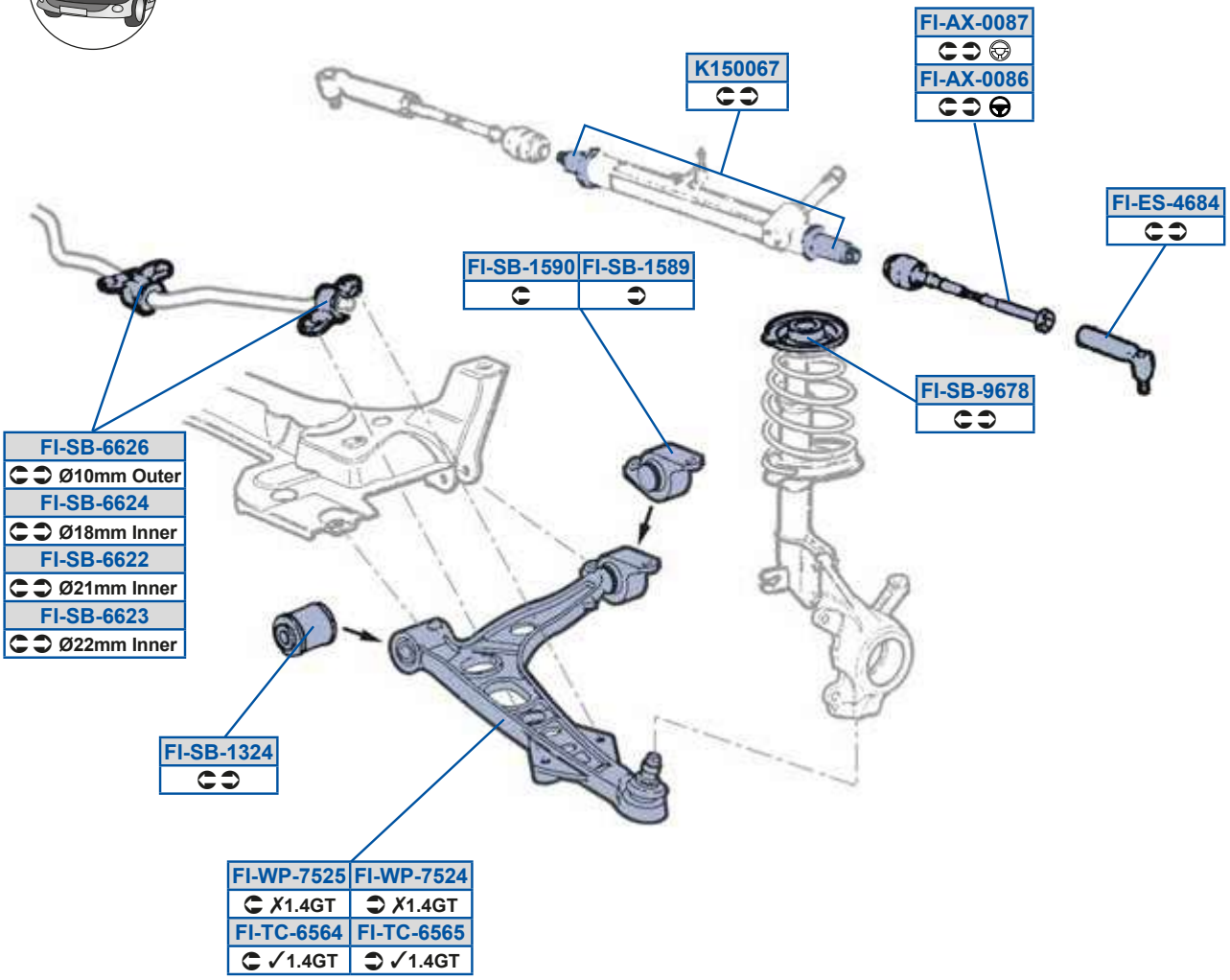

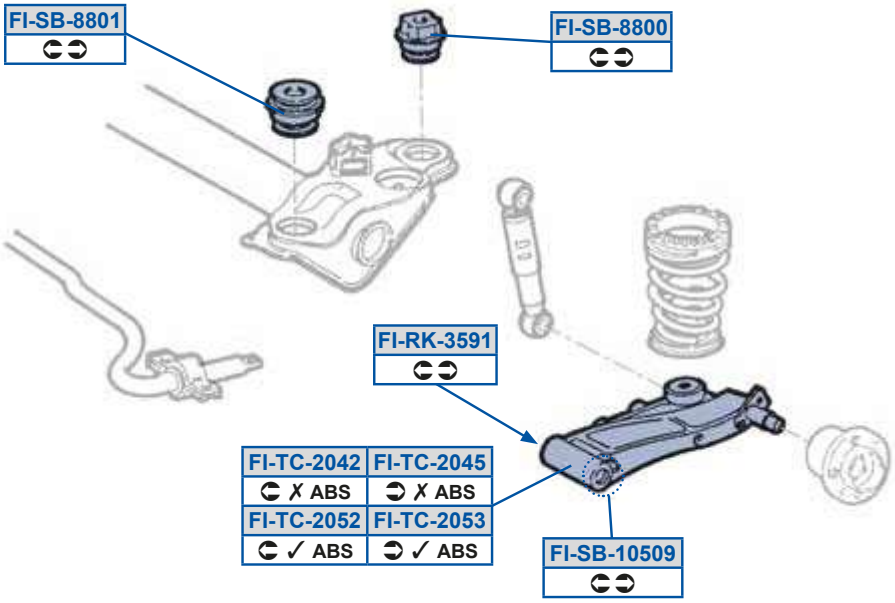

TV50i 588FD
GGBCCD9

TV5dP5DD>>
EEC7GF9

TV5eQ5>8BC
EEADC8C

TV50i 588FE
EE78BG83GGBDGBF

TV5dP5DD>A
EEC7GFA

TV5eQ5>8C>
EEDGG77

TV5Sd5BDFB
EEC99FC3GGBDGBG

TV5dP5DD>B
EEF7BC7

TV5eQ5>8CA
EEDGG78

TV5cY5ACG9
EE8G7D9

TV5dP5DD>D
EEC7GG7

TV5eQ5DCDB
BDB9GFAB3BDBA7779

TV5dP598C8G
BDEB8G973BDED89EG

TV5dP5FF88
EECD98F

TV5eQ5DCDC
BDB9GFAC3BDBA777A

TV5dP59A>B
EDEACF8

TV5dP5FF89
EECCDE8

TV5h a5EC>B
BDB79DF93BDB79DFB

TV5dP59CFG
EEECABA

TV5dP5GDEF
7EEECGB7

TV5h a5EC>C
BDB79DF3BDB79DF8

TV5dP59CG8
EEECABB

TV5eQ5>8B>
EEADC8B

Y9C88DE
AD79787F3E7EGAB7

af] e_ 09FF1	8G7GG 8A79;	af] e_ 09FFr 1	8978E 8E79;
af] e_ gt 09FF0i 1	8; 788 9878G	af] e_ gt 09FFr 1	8D78A 9878G

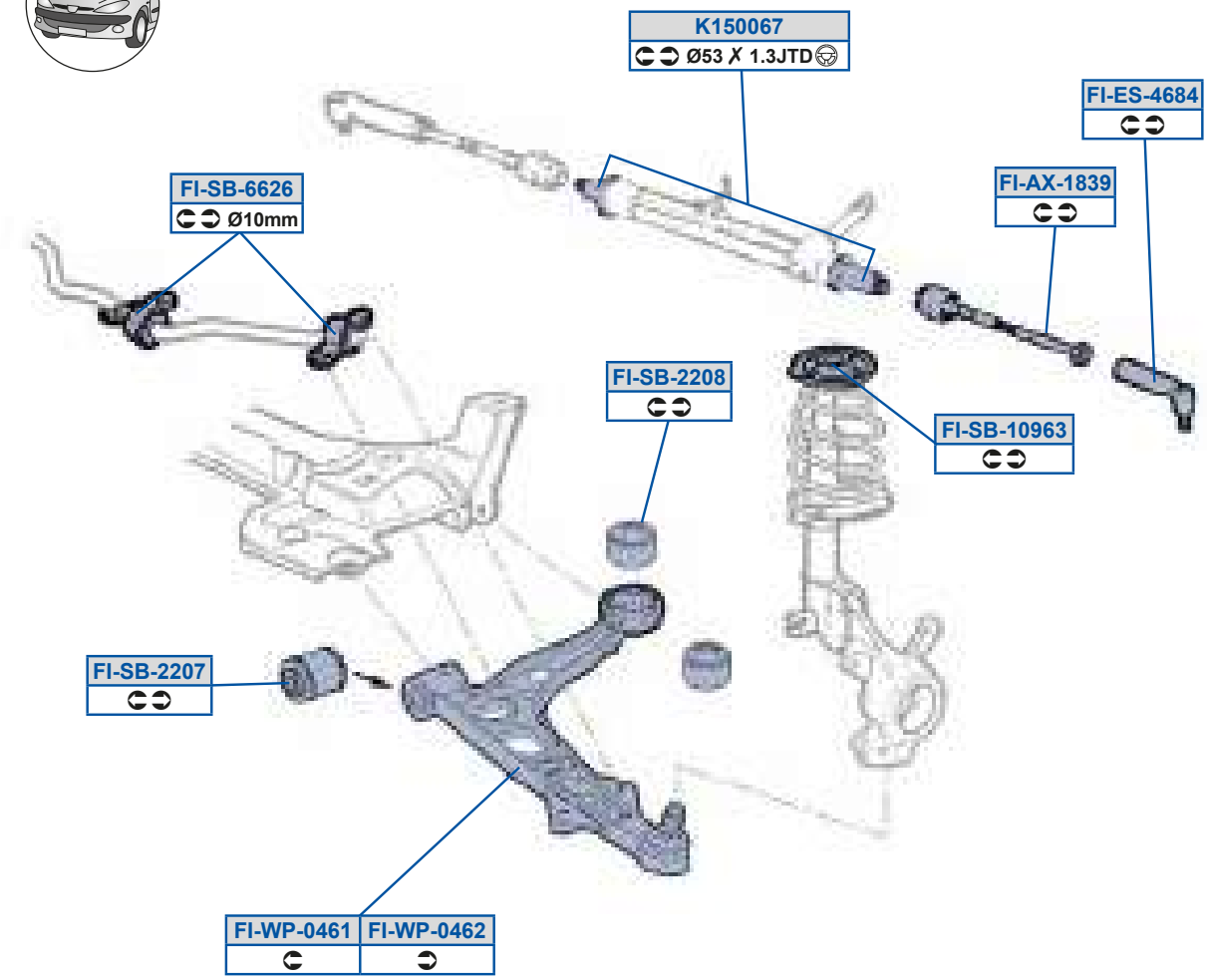

FI-SB-10509

MOOG

TV50i 59FAG
GGBFABA

TV5h a58BD>
BDCBCDD83BDCC8EG7

TV5Sd5BDFB
EEC99FC3GGBDGBG

Y9C88DE
AD79787F3E7EGAB7

TV5dP598C8G
BDEB8G973BDED89EG

TV5dP598GDA
BDEBDCBB

TV5dP5>>8E
BDCBCDD7 /40

TV5dP5>>8F
BDCBCDD8

TV5dP5DD>D
EEC7GG7

TV5h a58BD9
BDCBCDD73BDCC8EA9

af] e_ 09GG1	8A79;	Uc0] RS af] e_ 09GG1	9878C
af] e_ Sg_ 09GG1	8E78F 8A79;	af] e_ Sg_ 09GGr 1	9878G
af] e_ gt 09GG1	8B78F		

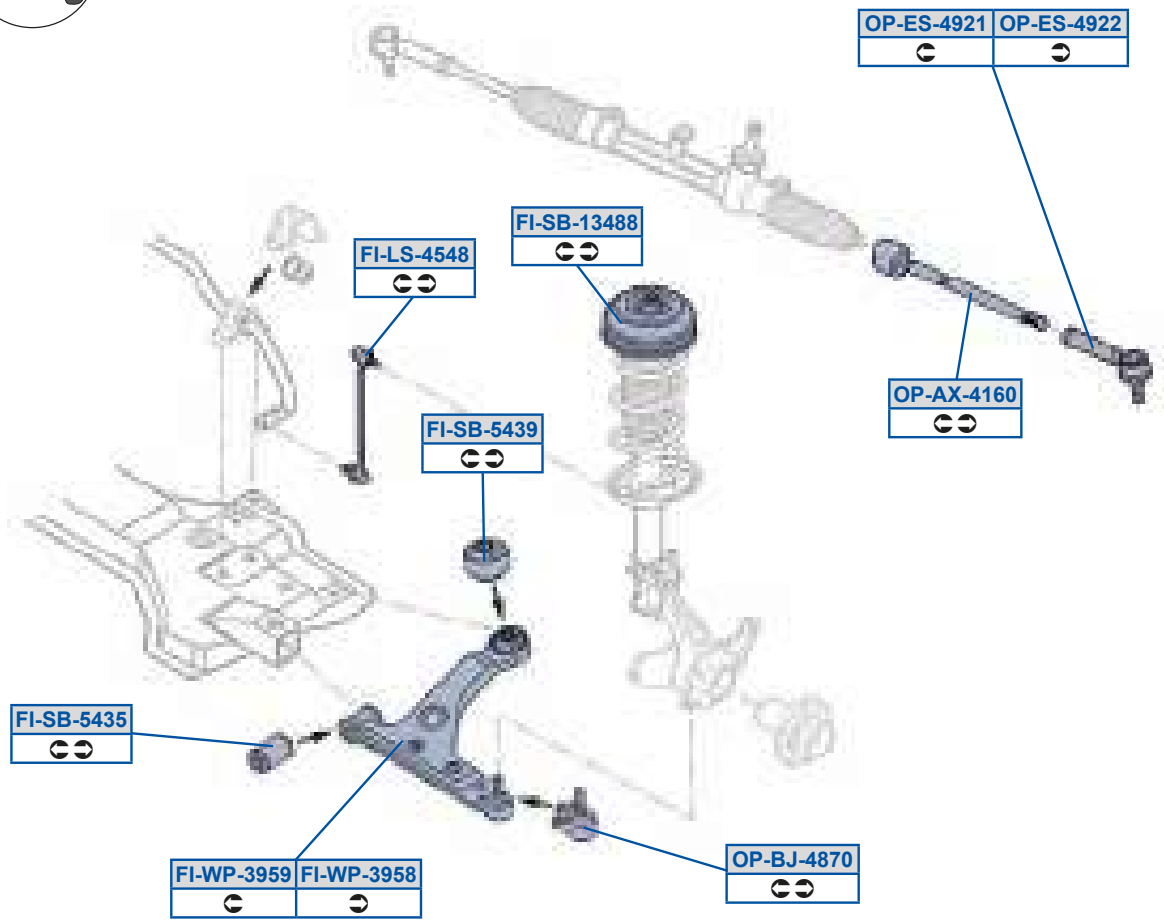

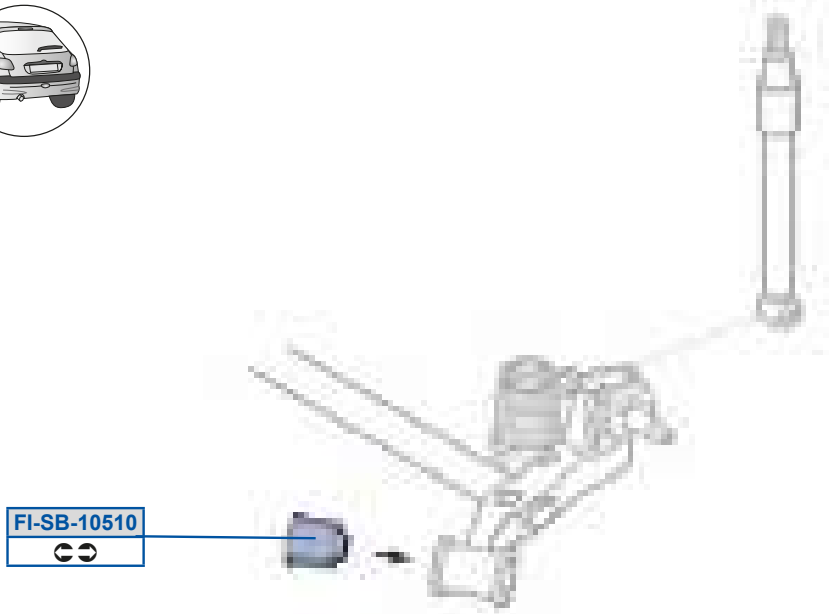

TVWZd5BCBF
C7C8C9ED3C7CA8F9A

_a5PX5BFE8
AC97DE3AC97FE

TVWdP598C98
C8F7BCC83CCE77DGC

_a5Sd5BG>9
EEADAF9G3EEADBCDF

TVWdP59ABFF
C7C878AB3C7C98E7E

_a5Sd5BG>>
EEADAFA73EEADBCDG

TVWdP5CBAC
AC9AF73CCE7A9A9

TVWdP5CBAG
CCE77EC8

TVWh a5AGCF
C8EFA7CD3C8FAG7AG

TVWh a5AGCG
C8EFA7CE3C8FAG7B7

_a5Oi 5B9D8
8D7ABCD38D7ACBA

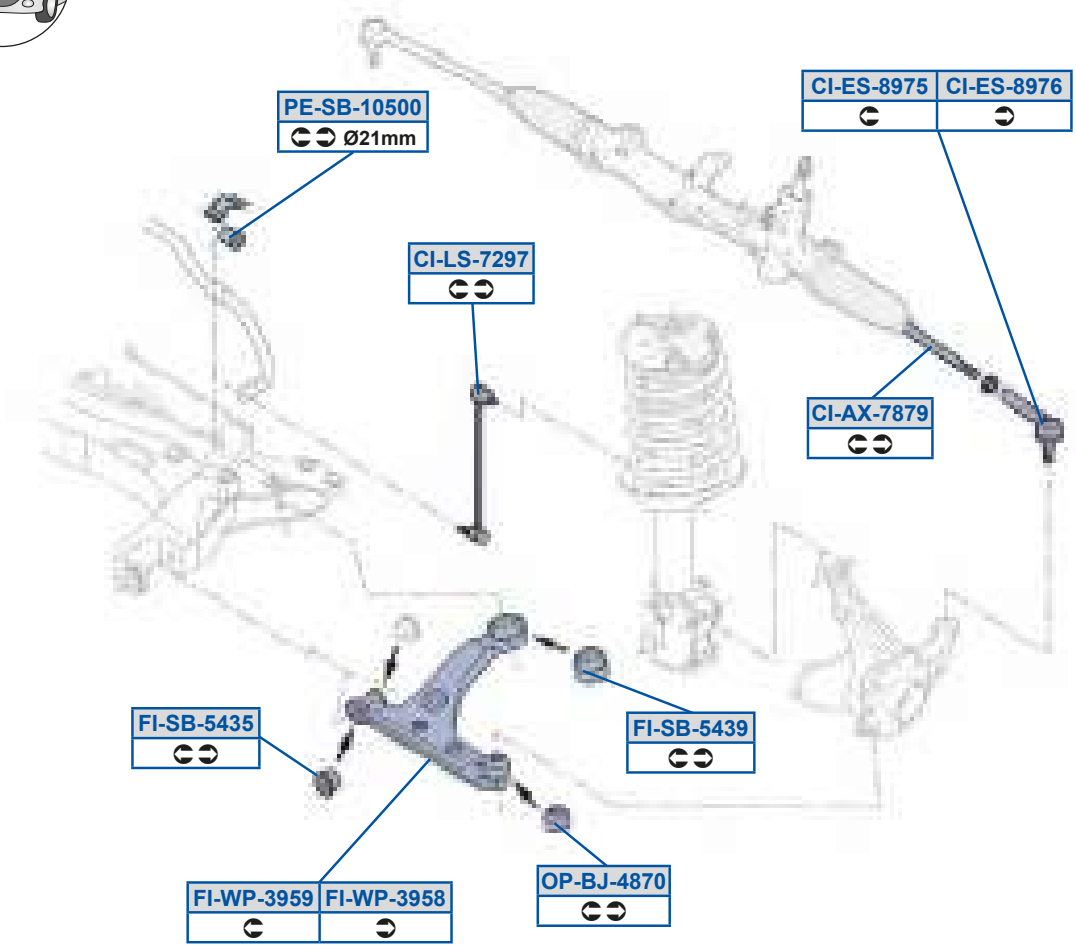
PE-SB-10500
Ø21mm
CI-ES-8975
CI-ES-8976
CI-LS-7297
CI-AX-7879
FI-SB-5435
FI-SB-5439
FI-WP-3959
FI-WP-3958
OP-BJ-4870

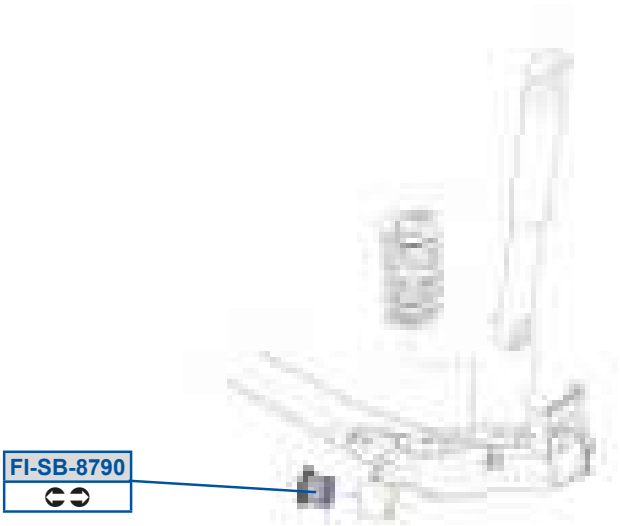
FI-SB-8790

QV5Oi 5EFEG

QV5Sd5FGEC

AF8EFB3AF8EFD

QV5Sd5FGED

AF8EFC3AF8EFE

QV5Zd5E>GE

C8E7B77F3C8F8CBEG

TV5dP5CBAC

AC9AF73CCE7A9A9

TV5dP5CBAG

CCE77EC8

TV5dP5FEG8

C8EFAD9A

TV5h a5AGCF

C8EFA7CD3C8FAG7AG

TV5h a5AGCG

C8EFA7CE3C8FAG7B7

_ a5PX5BFE8

AC97DE3AC97FE

aS5dP598C88

C8EFCBFF

dQf R_ P Q ; 8Z1	8; 7GD 9; 78D	dQf R_ Q ué t Q ; 8a1	8; 7GD 9; 78D
dQf R_ a t y 7QÉt é Q ; 8r 1	8G7GD 9; 78D		

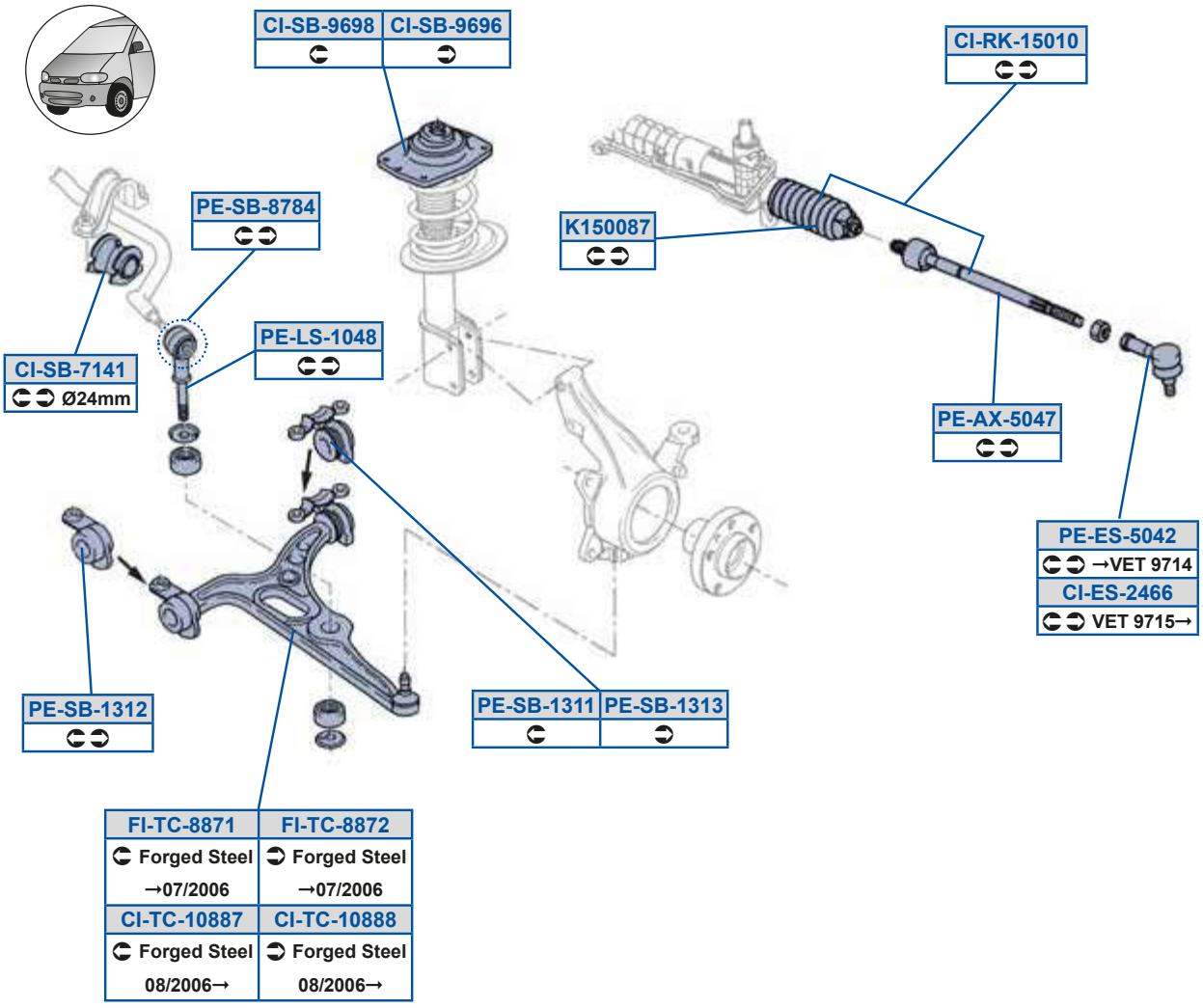

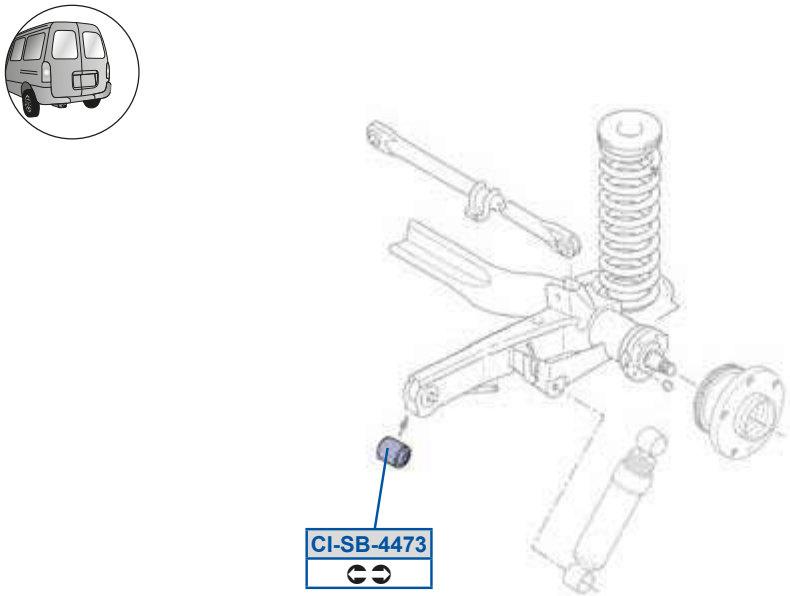

MOOG

QW5Sd5>BDD
EEAD99EG

TW5eQ5FFE9
8A8A7FA7F738A8DEAC7F7

aS5dP59A9A
8A7CCC97F73AC98DB/40

QW5cY59C898
GCDDGC7FF73GGBEE8A

TW5eQ5FFE>
8A8A7FB7F738A8DEAD7F7

aS5dP5FEFB
8A8A7CD7F7

QW5dP5BBEA
8BEGECG7F73C8C9D8

Y9C88FE
GB7B7DDB8F

QW5dP5E9B9
8A7CEF97F7

aS5Oi5C8BE
GCDDGC7FF73GGBEE8A

QW5dP5GDGD
C7AC9G3C7ACAF

aS5Sd5C8B>
8A7D77A7F73B7CG7G

QW5dP5GDGF
C7AC9G3C7ACAF

aS5Zd598BF
8A7FDDB7F738A8EB9C7F7

QW5eQ598FFE
8ACD7DC7F7

aS5dP59A99
8A7CCC87F73AC97QC/40

QW5eQ598FFF
8ACD7DD7F7

aS5dP59A9>
AC98V73AC98V8

dQf R_ Q E8r 4; E; r 1	8978E	dQf R_ P Q E8r 1	8978E
dQf R_ a t y 7QÉt é Q E8r 1	8978E		

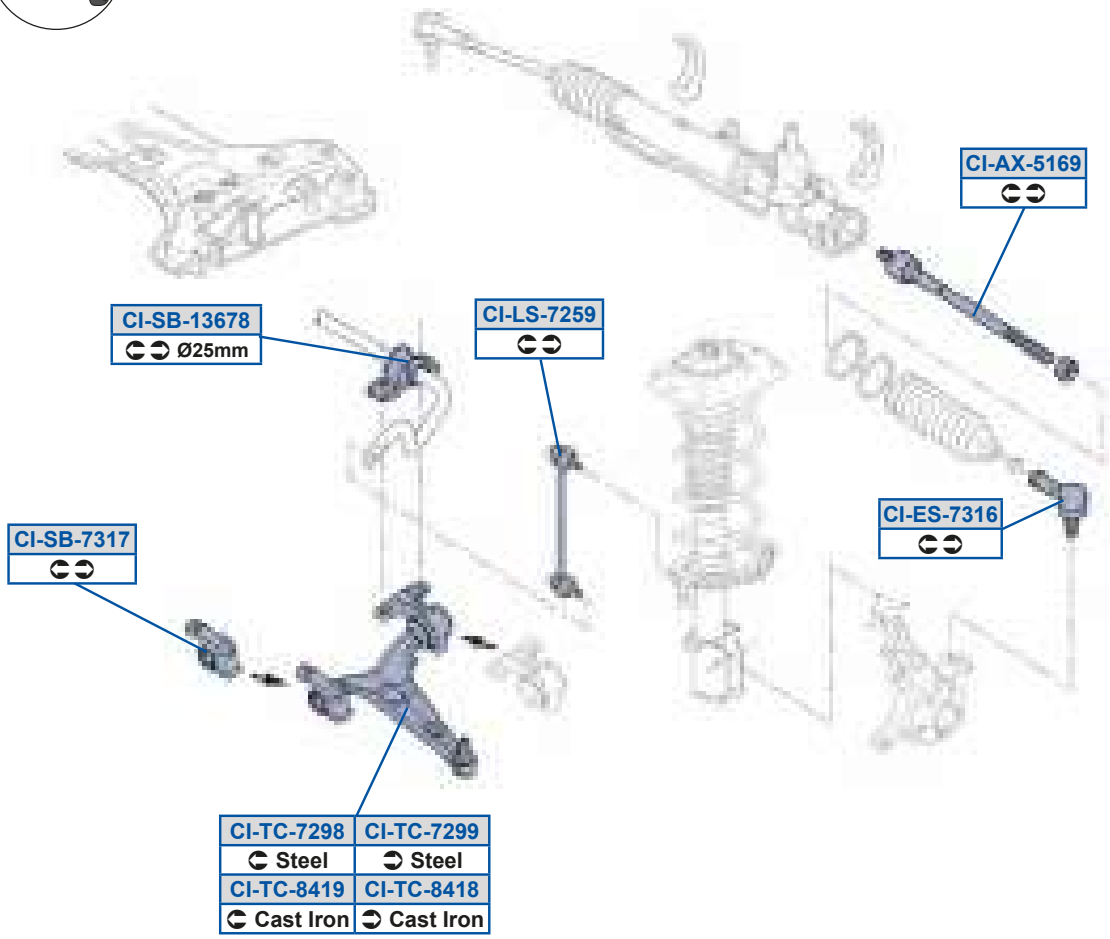

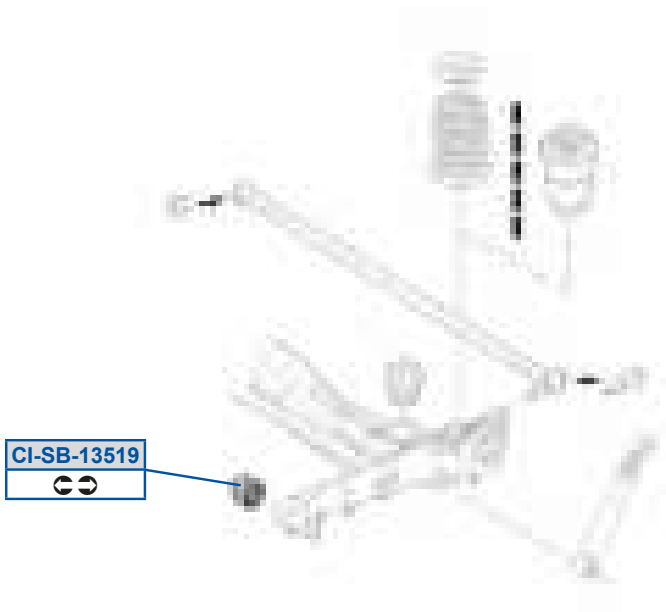

QV5Oi 5C9DG
AF89T7

QV5Sd5EA9D
GB7AF8EEAF

QV5Zd5E>CG
8B777GGDF7

QV5dP59AC9G
8B778E89F7

QV5dP59ADEF
8BB789A9F7 /40

QV5dP5EA9E
8BGEB7E7F7 /40

QV5eQ5E>GF
8B789AGCF738BGEB7F7F7

QV5eQ5E>GG
8B789AGBF738BGEB7E7F7

QV5eQ5FB9F
8B789AGBF738BGEB7E7F7

QV5eQ5FB9G
8B789AGCF738BGEB7F7F7

dSRWQW	8D78D 9879B		

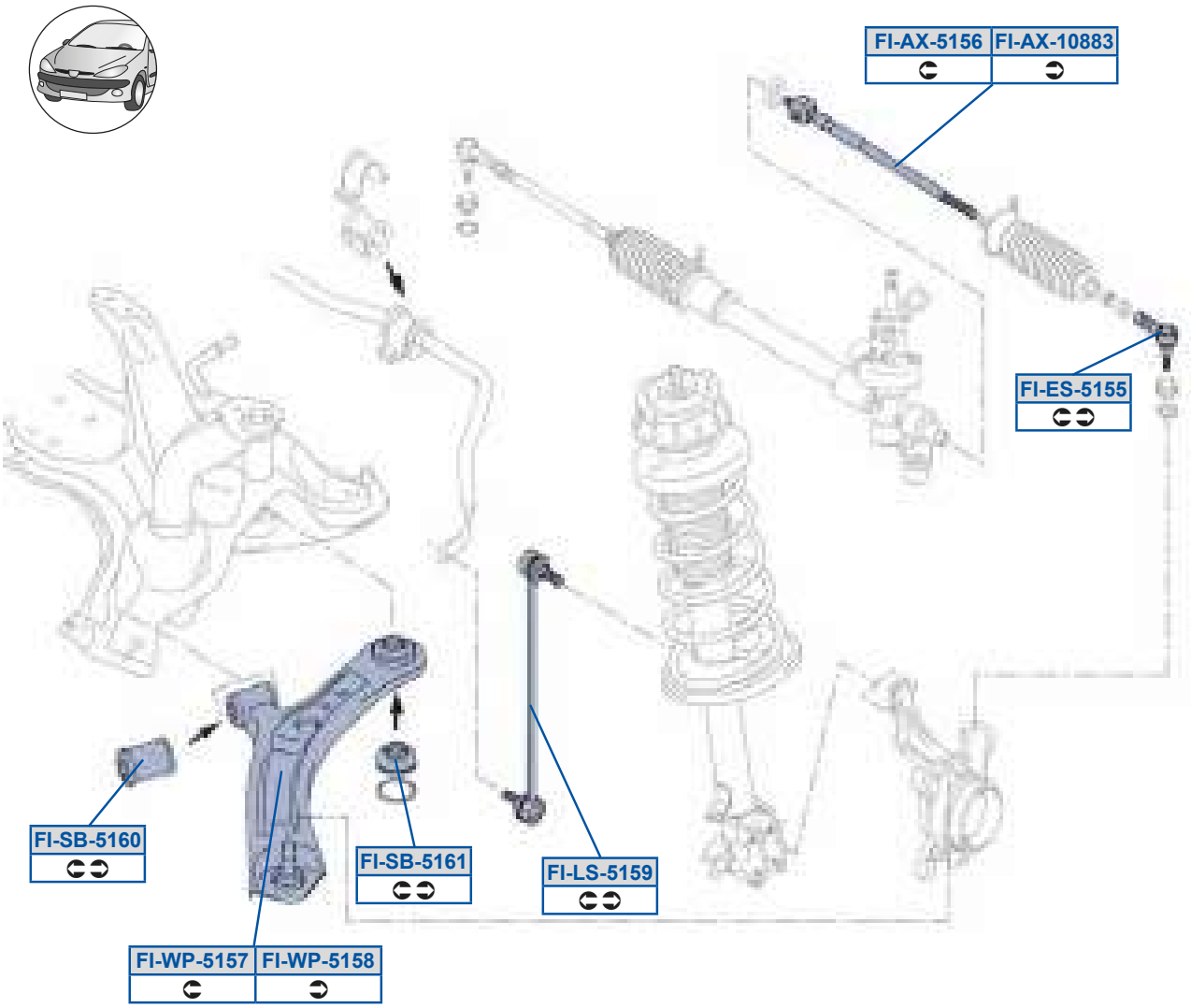

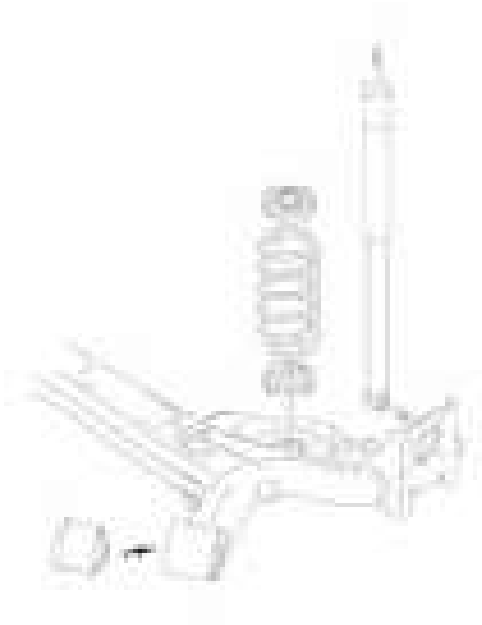

TV50i 598FFA
BFFA7EGX77

TV50i 5C9CD
BFFA7EGX87

TV55d5C9CC
E8EB9EE73E8EC77DE

TV57Zd5C9CG
E8EB9DFF

TV56dP5C9D8
E8EB9EAA

TV56dP5C9D9
E8EB9EA8 /40 E8EB9EA9 /40

TV58h a5C9CE
E8EB9EA93E8EC7988

TV58h a5C9CF
E8EB9EA83E8EC78BG

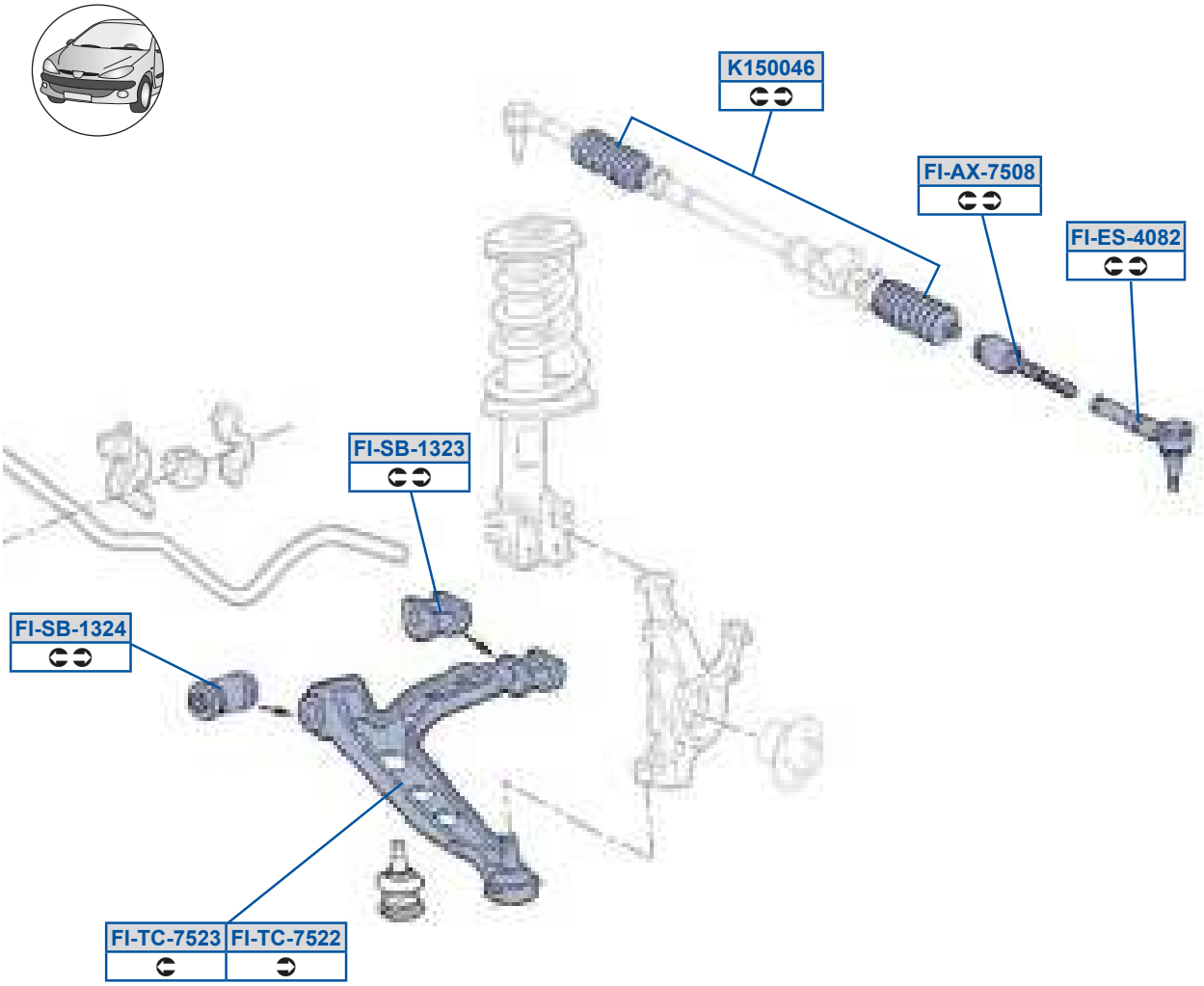
K150046
FI-AX-7508
FI-ES-4082
FI-SB-1323
FI-SB-1324
FI-TC-7523
FI-TC-7522

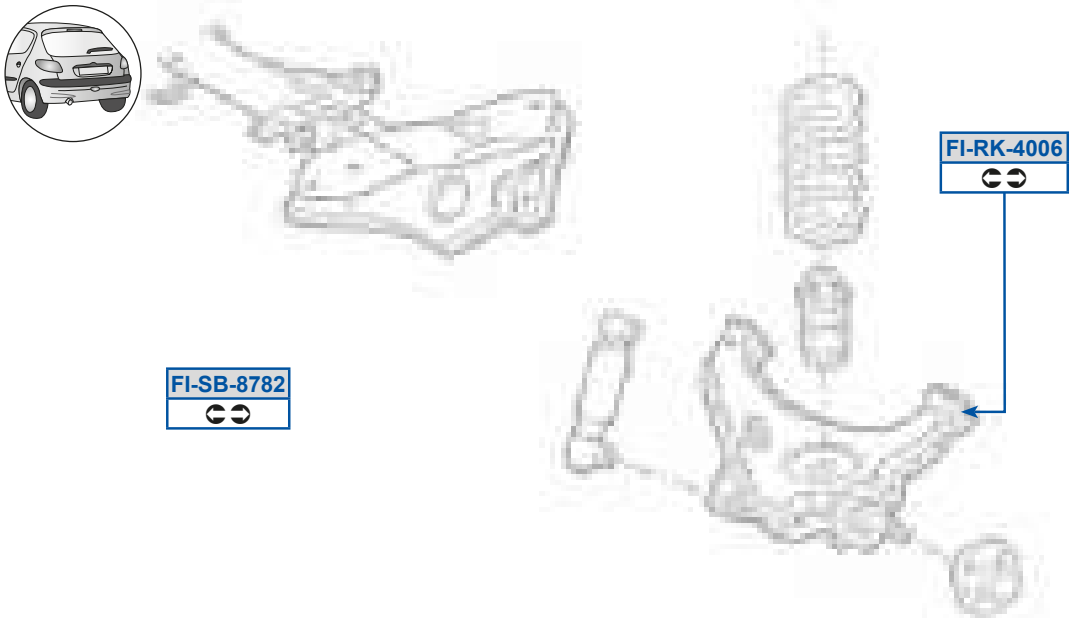
FI-RK-4006
FI-SB-8782

TV6Oi 5EC8F
EDCF9EA

TV6Sd5B8F>
CGD77AD3CGD77AE

TV6c Y5B88D
EDDA88B3EDDA88C

TV6dP59A>A
CG9E9GA3EDEACF9

TV6dP59A>B
EDEACF8

TV6dP5FEF>
EEBEGCD

TV6eQ5EC>>
EDADGGD

TV6eQ5EC>A
EDADGGC

Y9C88BD
EE777DB

deW_ 09G; 1	98789	99798	deW_ [éh t' 09G; 1	8978A	8F78F
deW_ 09G; r 1	8D78;	99798	deW_ [éh t' 09G; r 1	8978B	8F78F

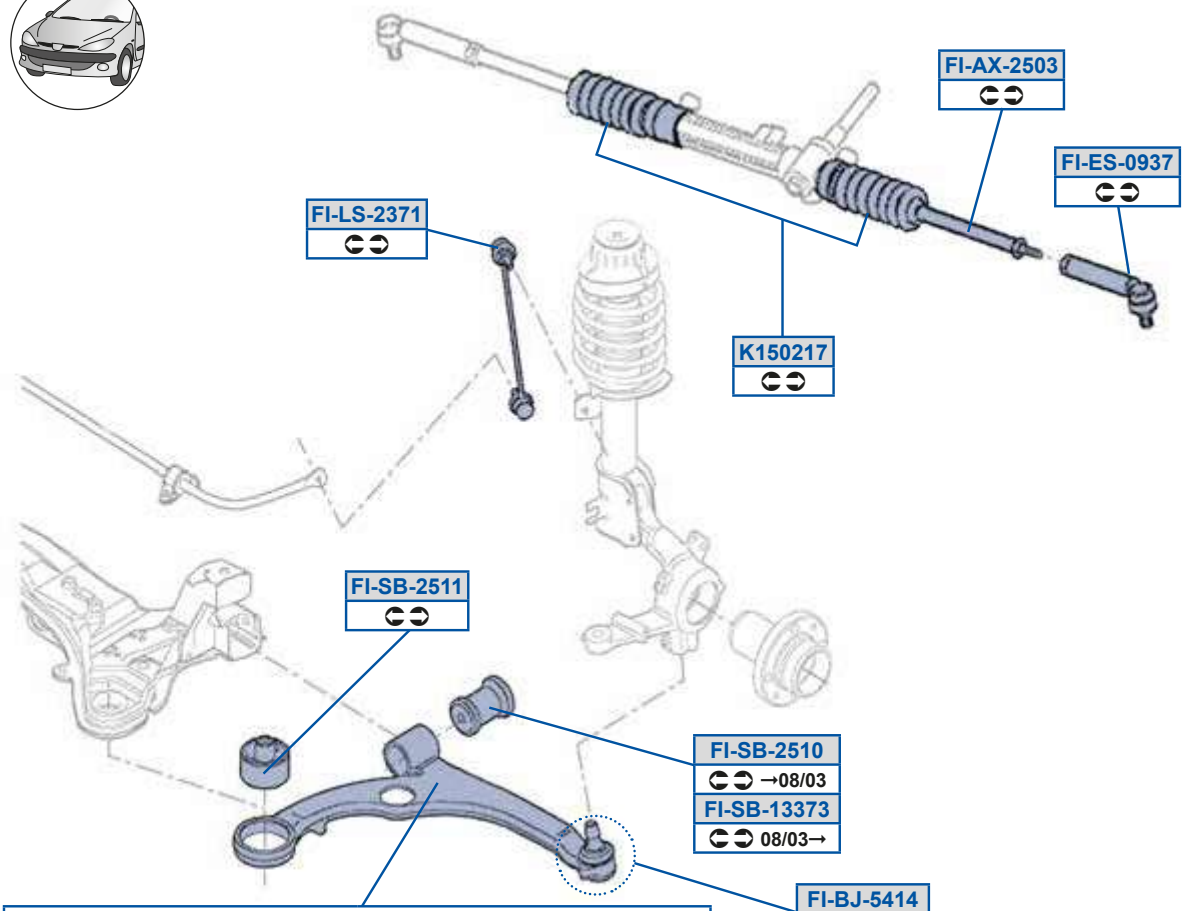

CHECK WITH PARTS MOUNTED	
FI-WP-0939	FI-WP-0938
→08/03 Cast Iron	→08/03 Cast Iron
FI-TC-8873	FI-TC-8874
→08/03 Forged Steel	→08/03 Forged Steel
FI-WP-5692	FI-WP-5693
09/03→09/06 Cast Iron	09/03→09/06 Cast Iron
FI-TC-9057	FI-TC-9058
09/03→09/06 Forged Steel	09/03→09/06 Forged Steel
FI-WP-7420	FI-WP-7421
10/06→ Sheet Metal	10/06→ Sheet Metal ✗ Xenon light

FI-SB-8781

TV5Oi 5>C8A
GGBG98E

TV5e Q5FFEA
C7E77EGE3GAC78BFC

TV5h a5EB>8
C7E7CBDB3C8EGC9D7

TV5P X5CB9B
C7E7CBDB /40 3C7E7CBDDC /40

TV5e Q5FFEB
C7E77EEG3C7E77EGEG

TV5h a5EB>9
C7E7CBDC3C8F9EEAE

TV5Sd58GAE
GGBG98F

TV5e Q5G8CE
C7E7C7FA3C7E7CBDB

Y9C8>9E
GGBG98D

TV5Zd5>AE9
C7E77BDB3C7E77GB8

TV5e Q5G8CF
C7E7C7FB3C7E7CBDC

TV5dP59AAEA
C7E7C7FA /40 3C7E7C7FB /40

TV5h a58GAF
C7E77EEG3C7E77EGEG

TV5dP5>C98
C7E77BBA

TV5h a58GAG
C7E77EGE3GAC78BFC

TV5dP5>C99
C7E77EEF

TV5h a5CDG>
C7E7C7FA3C7E7CBDB

TV5dP5FEF9
C8FB7D77

TV5h a5CDGA
C7E7C7FB3C7E7CBDC

eS[ac0 09CGr 1	8C7GB 9; 7GF	eS[ac0 09CG1	8A7G8 9; 7GF
eS[ac0 dh 09CG1	8A7G8 8F7GE	eW_ 09D81	8E7FE 987GC

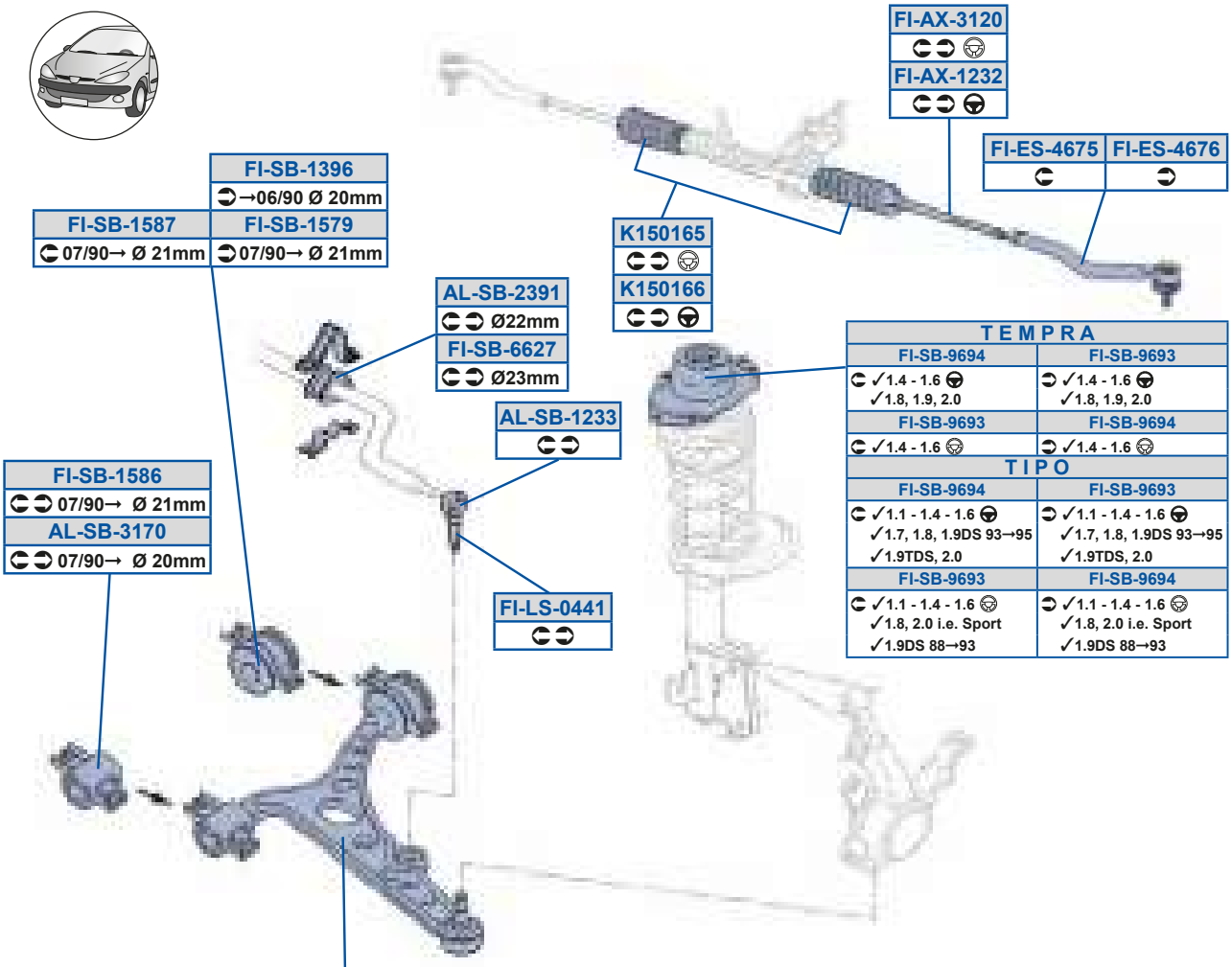

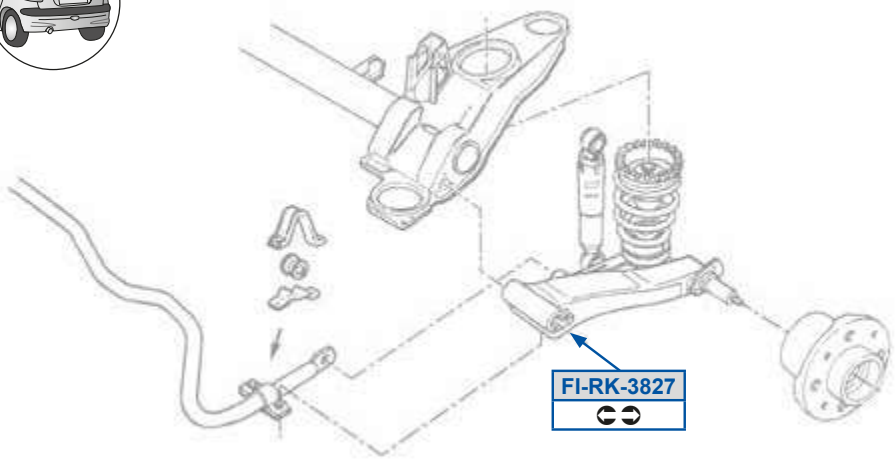

MOOG

OZ5dP59>AA
D7F7DB7F3ED78DB9

OZ5dP5>AG9
CFG98GD3ED9CE8B

TV5OI 59>A>
GGAGDEC3GGB8D9C

TV5OI 5A9>8
CGCF9BB3EDAAE98

TV5Sd5BDEC
ECG898D3GGBEBAC

TV5Sd5BDED
D7F7GBGB3ECBCCFA

TV5Zd58BB9
D7CE7D9E3D7F7ECFA

TV5c Y5AF>E
BDBCGE9A

TV5dP59CEG
ED787DF

TV5dP59CFD
ED787DB

TV5dP59CFE
ED787DC

TV5dP5DD>E
D7F7FCCE3ED78DBD

TV5dP5GDGA
BDB8B8FA3D7F7DAGF

TV5dP5GDGB
BDB8B8FB3D7F7GECA

TV5h a5EC8A
BDB9AF9A3E8EBEG8D

TV5h a5EC8B
BDB9AF993E8EBEG8C

Y9C89DC
EDBC8D73GGBDGBE

Y9C89DD
GGBDF8D3GGBEADG

f ZkddS 0; 81	8D7GB 8F78;	f ZkddS 0; 8r 1	8C7GE 9; 7GG

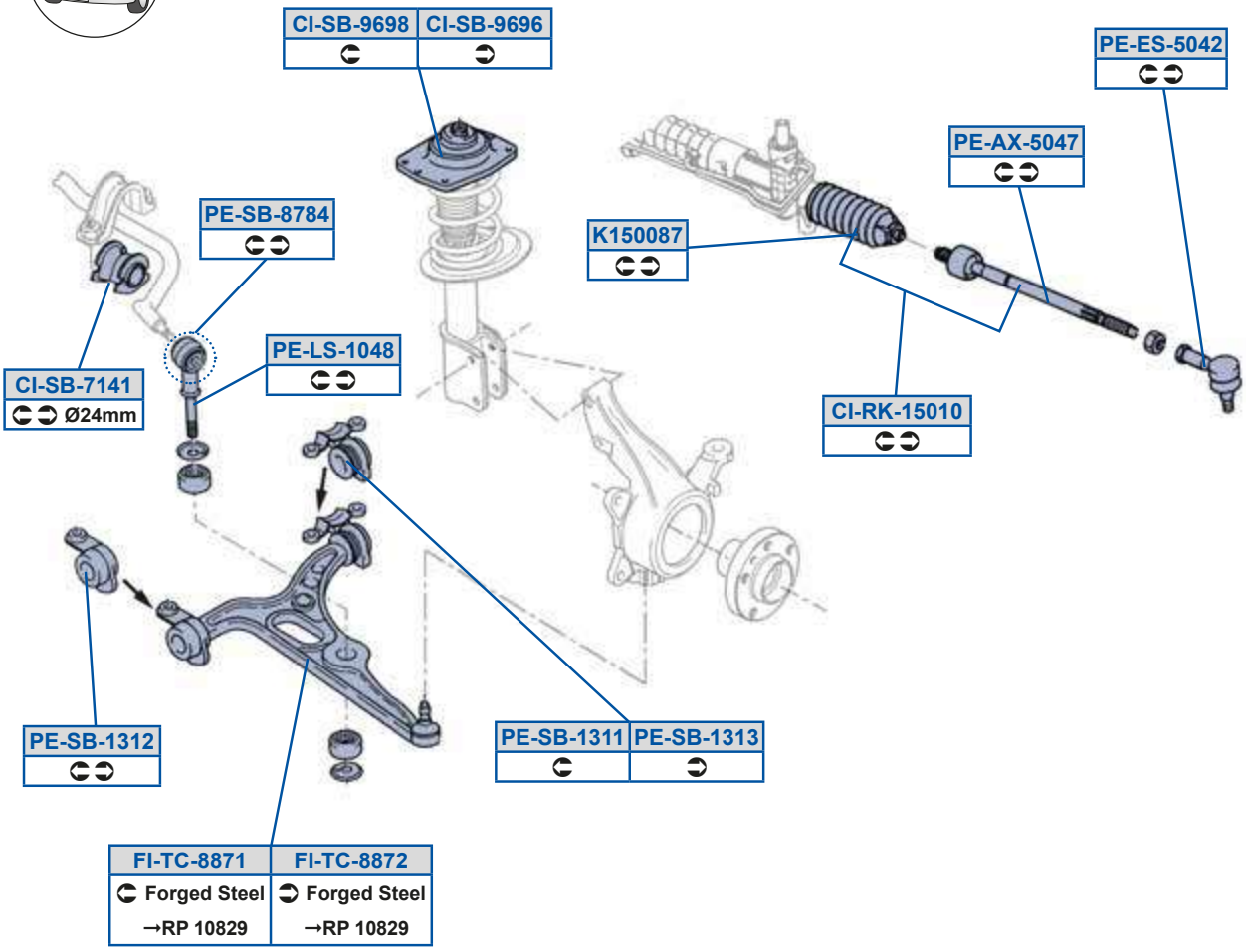

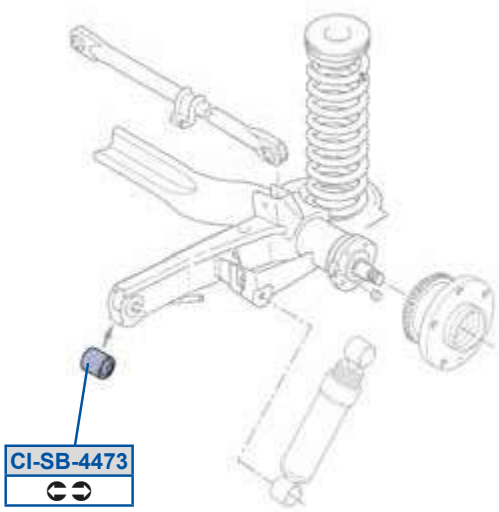

QW5c Y59C898
GCDDGC7FF73GGBEE8A

aS5Oi 5C8BE
GCDDGC7FF73GGBEE8A

QW5dP5BBEA
8BEGECG7F73C8C9D8

aS5Sd5C8B>
8A7D77A7F73B7CG7G

QW5dP5E9B9
8A7CEF97F7

aS5Zd598BF
8A7FDDB7F738A8EB9C7F7

QW5dP5GDGD
C7AC9G3C7ACAF

aS5dP59A99
8A7CCC87F73AC97QC /40

QW5dP5GDGF
C7AC9G3C7ACAF

aS5dP59A9>
AC98V73AC98V8

TW5eQ5FFE9
8A8A7FA7F738A8DEAC7F7

aS5dP59A9A
8A7CCC97F73AC98DB /40

TW5eQ5FFE>
8A8A7FB7F738A8DEAD7F7

aS5dP5FEFB
8A8A7CD7F7

Y9C88FE
GB7B7DDB8F

f ZkddS 09EGr 1	8C78D 8D799	f ZkddS 09EGOi 1	8F78; 8D799

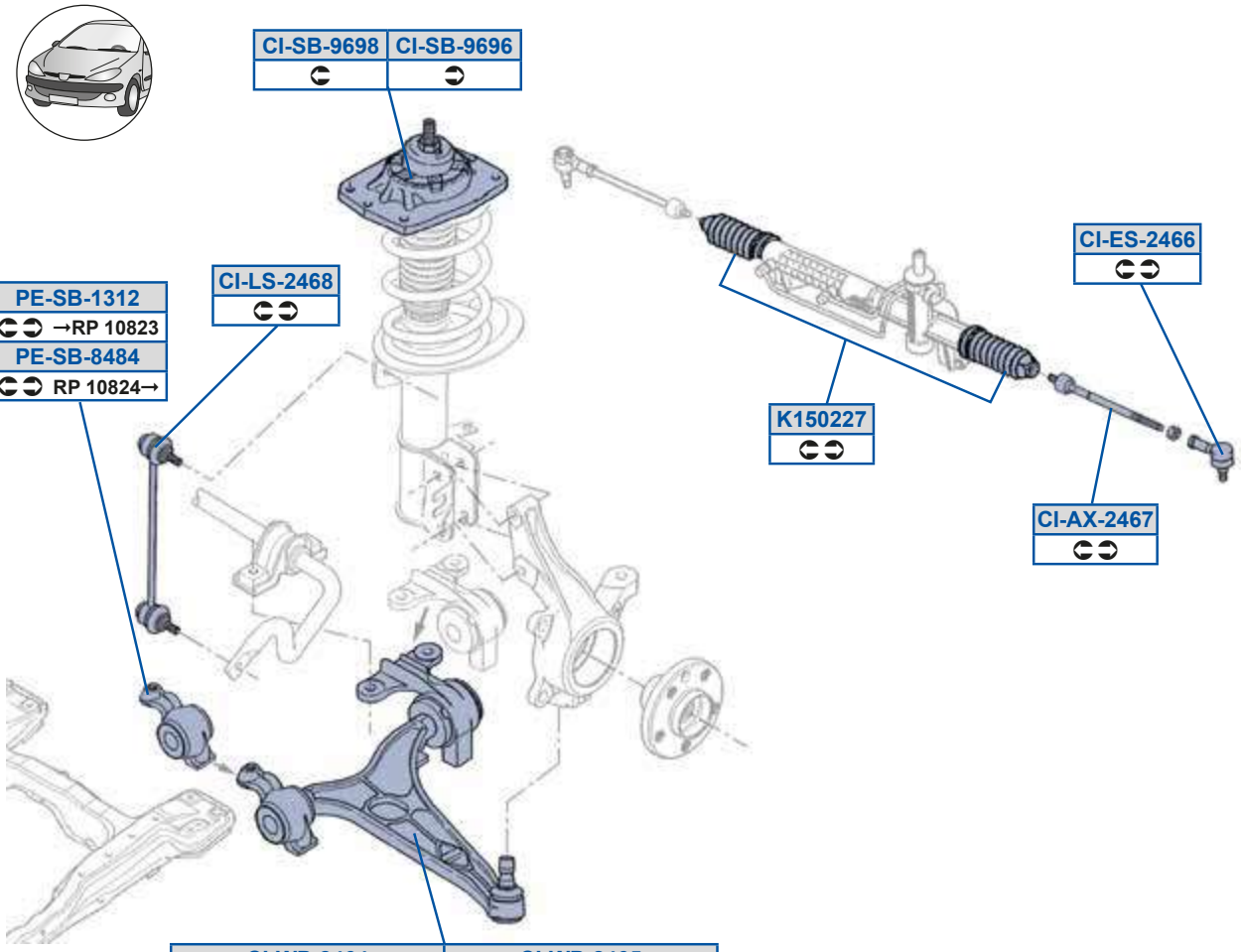

CI-WP-2464	CI-WP-2465
Ø 17mm →RP 10823	Ø 17mm →RP 10823
PE-TC-8483	PE-TC-8482
Ø 17mm RP 10824→	Ø 17mm RP 10824→
CI-TC-7298	CI-TC-7299
Ø 19mm ✓ 2.2JTD, 2.2D Multijet	Ø 19mm ✓ 2.2JTD, 2.2D Multijet

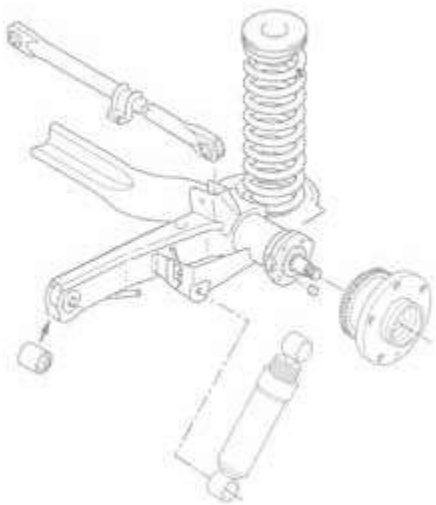

QW0Oi 5>BDE
EEAD99F7

QW0h a5>BDC
8ABDAFC7F73GAC78BFF

QW0Sd5>BDD
EEAD99EG

Y9C8>>E
B7DDE7

QW0Zd5>BDF
8AA897G7F7

aS5dP59A9>
AC98V73AC98V8

QW0dP5GDGD
C7AC9G3C7ACAF

aS5dP5FBFB
AC97 7 /4G3AC98t 9 /40

QW0dP5GDGF
C7AC9G3C7ACAF

aS5eQ5FBF>
8AC8AGG7F738ACD7D87F7

QW0eQ5E>GF
8B789AGCF738BGEB7F7F7

aS5eQ5FBFA
8AC8AGF7F738ACD7D77F7

QW0eQ5E>GG
8B789AGBF738BGEB7E7F7

QW0h a5>BDB
8ABDAFB7F73GAC78BFE

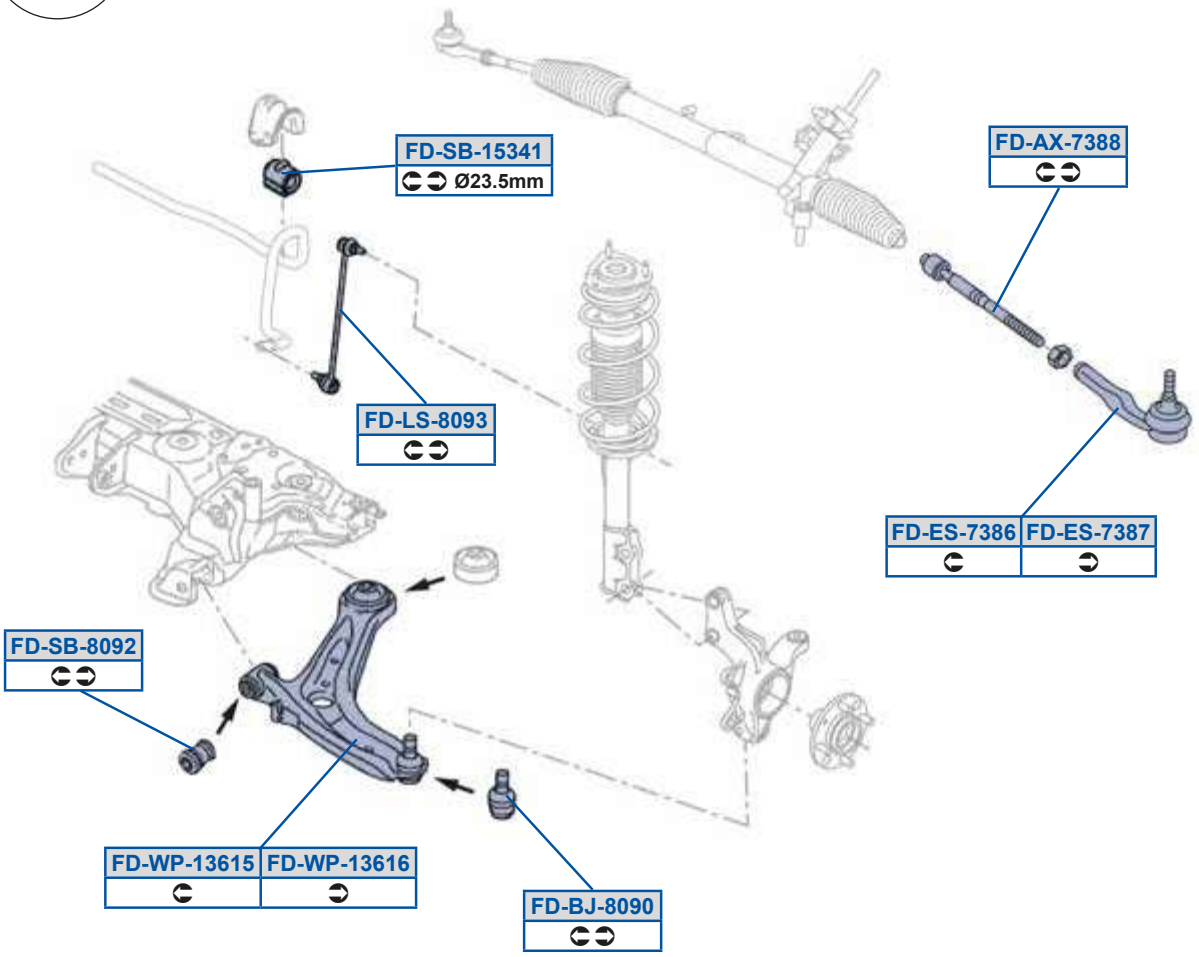
FD-SB-15341
Ø23.5mm
FD-AX-7388
FD-LS-8093
FD-ES-7386
FD-ES-7387
FD-SB-8092
FD-WP-13615
FD-WP-13616
FD-BJ-8090

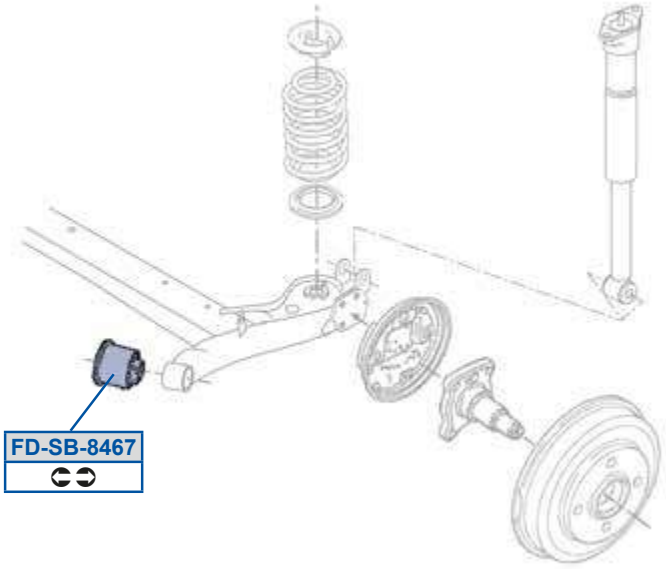
FD-SB-8467

MOOG

TR5Oi 5EAFF
8CBCBCE3F C8AZC8GOO

TR5PX5F8G8
8CB7E9B /4O38CB7E9C /4O

TR5Sd5EAFD
8CBCAAG3F C8AQBAEOO

TR5Sd5EAFE
8CBCAAF3F C8AQADEOO

TR5Zd5F8GA
8C8AABA38EBCG9B

TR5dP59CAB9
8EEDF7D3O 88CBFBOQ

TR5dP5F8G>
8CB7E9C /4O

TR5dP5FBDE
8CAC9GD38F7CF8C

TR5h a59AD9C
8EC8GCC3O 88A7C8OO

TR5h a59AD9D
8EC8GC93O 88A7B9OO

T_cR

Q5[0i WW	9; 798	Uc0] R Q5[0i	9; 798
Uc0] R Q5[0i 0Ri 07QPE4Ri 07QSf 1	8A79C	Uc0] R Q5[0i gt	9; 798

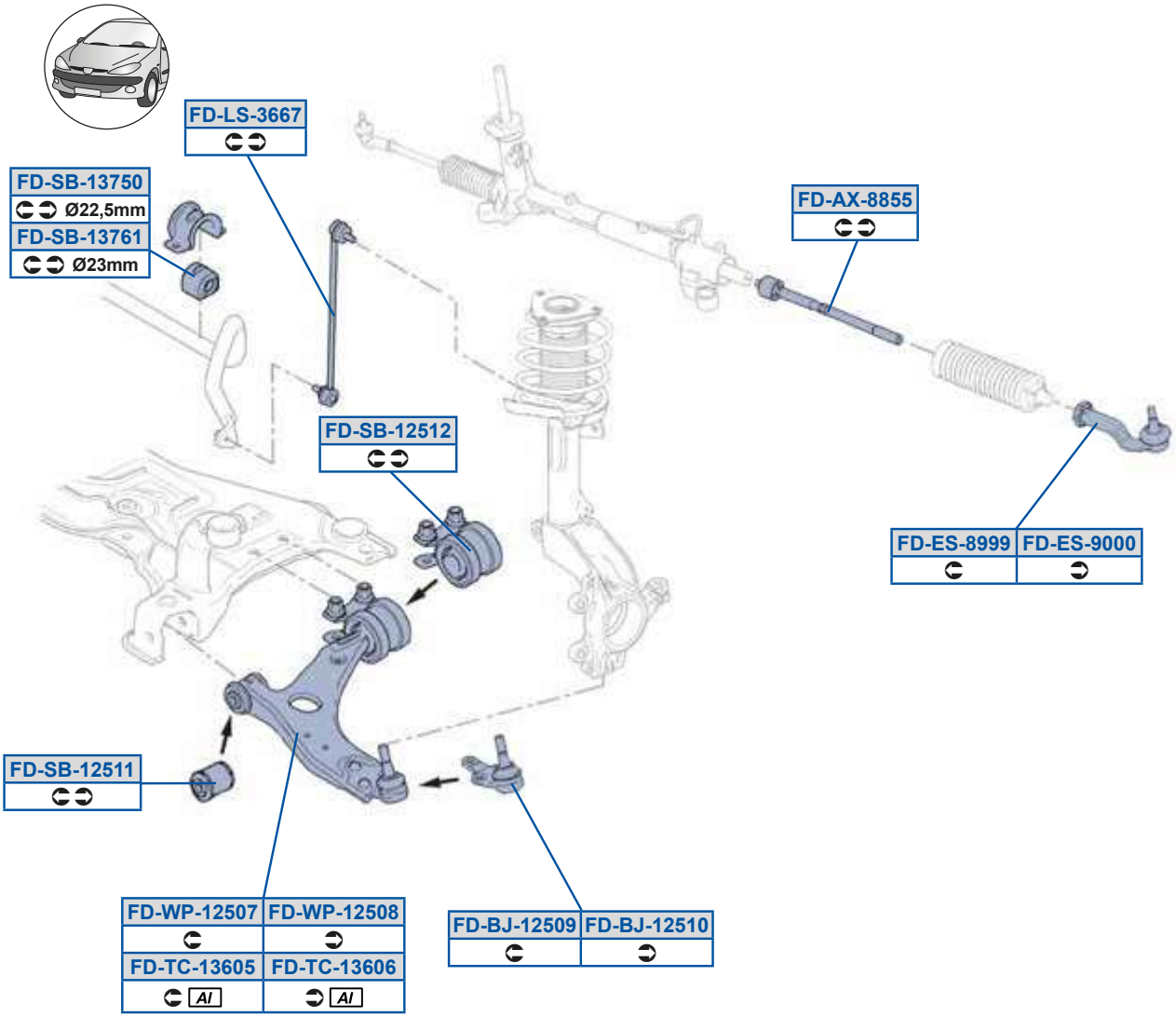

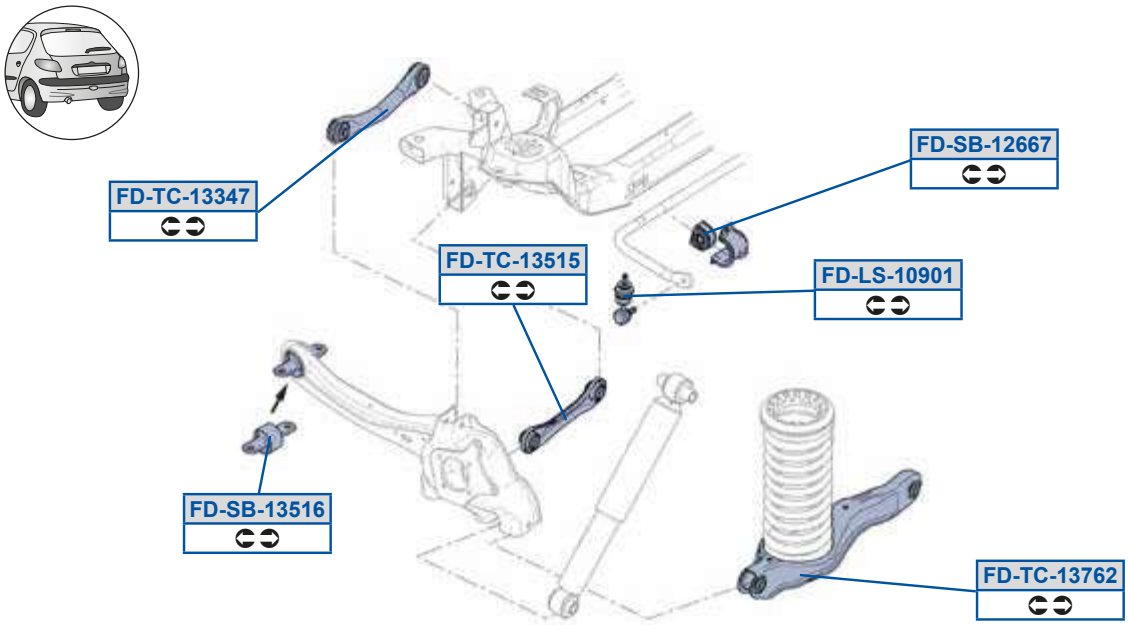

MOOG

TR5Oi 5FFCC
8E8BBFB38E8CB8B

TR5dP59>C9>
8E7GBCE /40 38E7GBDD /40

TR5eQ59AD8D
8E7GB9A38EBGCGA

TR5PX59>C8G
8E7GBDD /40

TR5dP59>DDE
8AAEGDB38AAEGDC

TR5eQ59AED>
8DFDE7C38DGBCDG

TR5PX59>C98
8E7GBCE /40

TR5dP59AC9D
8DG9FBG

TR5h a59>C8E
8E79GFA38E7GBDD

TR5Sd5FGGG
8E8BE7738EBF9AG

TR5dP59AEC8
8DFD8FA30 D8CBFB00

TR5h a59>C8F
8E79GE738E7GBCE

TR5Sd5G888
8E8BCED38EBF9AE

TR5dP59AED9
8 DFA BF838 F87 A9D

TR5Zd598G89
8DG8F8C38E78BDD

TR5eQ59AABE
8DFABDA30 D8CC770P

TR5Zd5ADDE
899AEG9389A7G7G

TR5eQ59AC9C
8DFDCFE38E7A8BC

TR5dP59>C99
8E7GBCE /40 38E7GBDD /40

TR5eQ59AD8C
8E7GBDF38EBGGG9

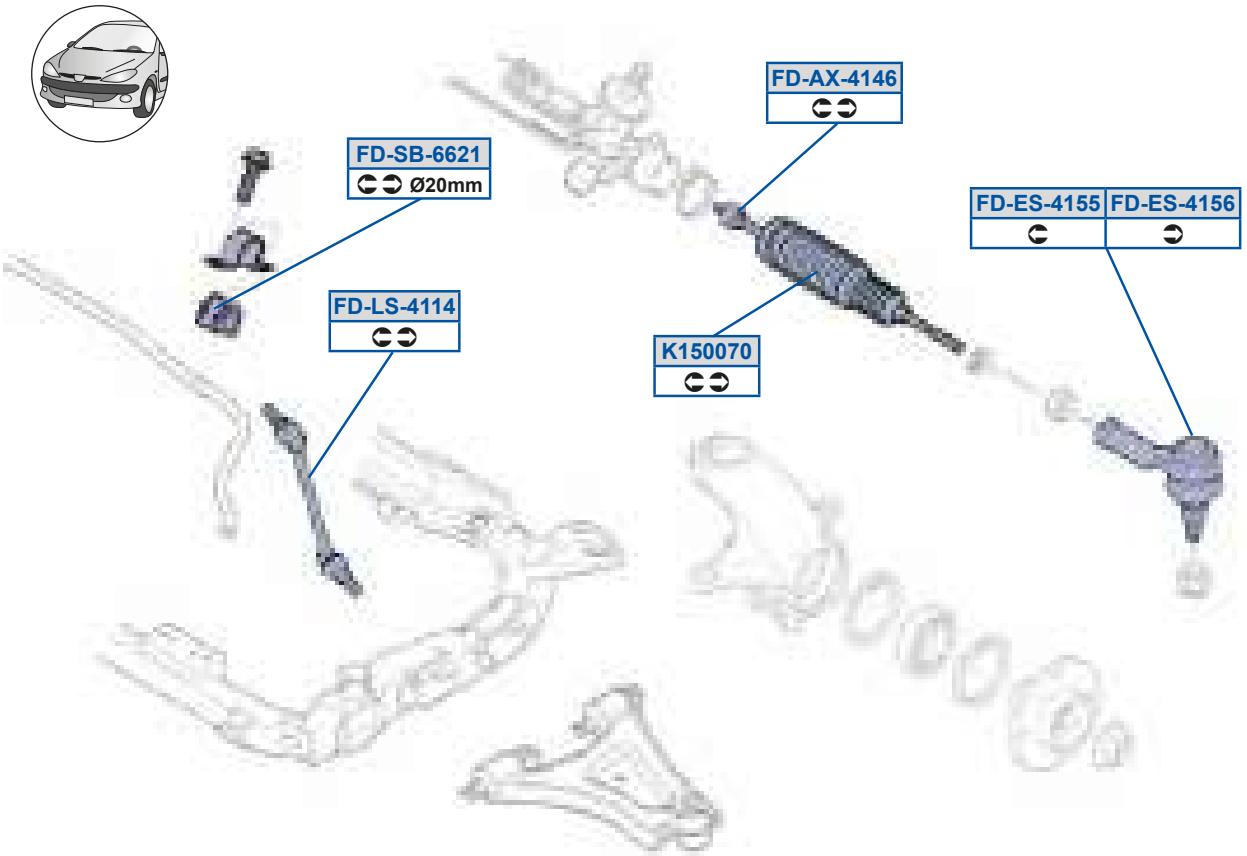
FD-AX-4146
FD-SB-6621
Ø20mm
FD-ES-4155
FD-ES-4156
FD-LS-4114
K150070

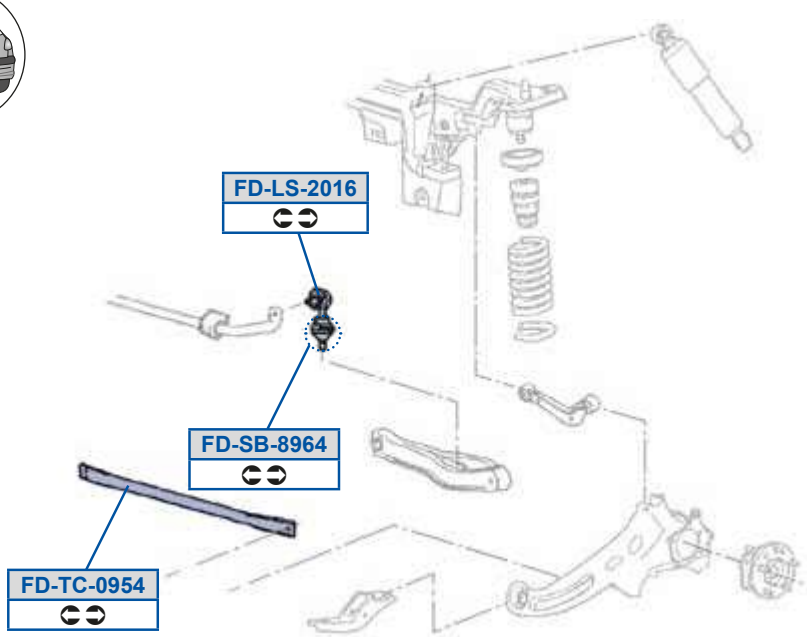
FD-LS-2016
FD-SB-8964
FD-TC-0954

TR5Oi 5B9BD
AG7A8BE3DFA97BG

TR5Sd5B9CC
87ACDG8387GEA9A

TR5Sd5B9CD
87ACDG7387GEA8D

TR5Zd5>89D
8799ACF387ACG88

TR5Zd5B99B
887D9DG3C87DGGC

TR5dP5DD>9
889FE9C3DE8B8GC

TR5dP5FGDB
DG8CB883GAPPCQBGAOQ

TR5eQ58GCB
DFDECEE3GAPPCYDC9OQ

Y9C88E8
AG7B8993DEE98EA

Q xr

T_cR

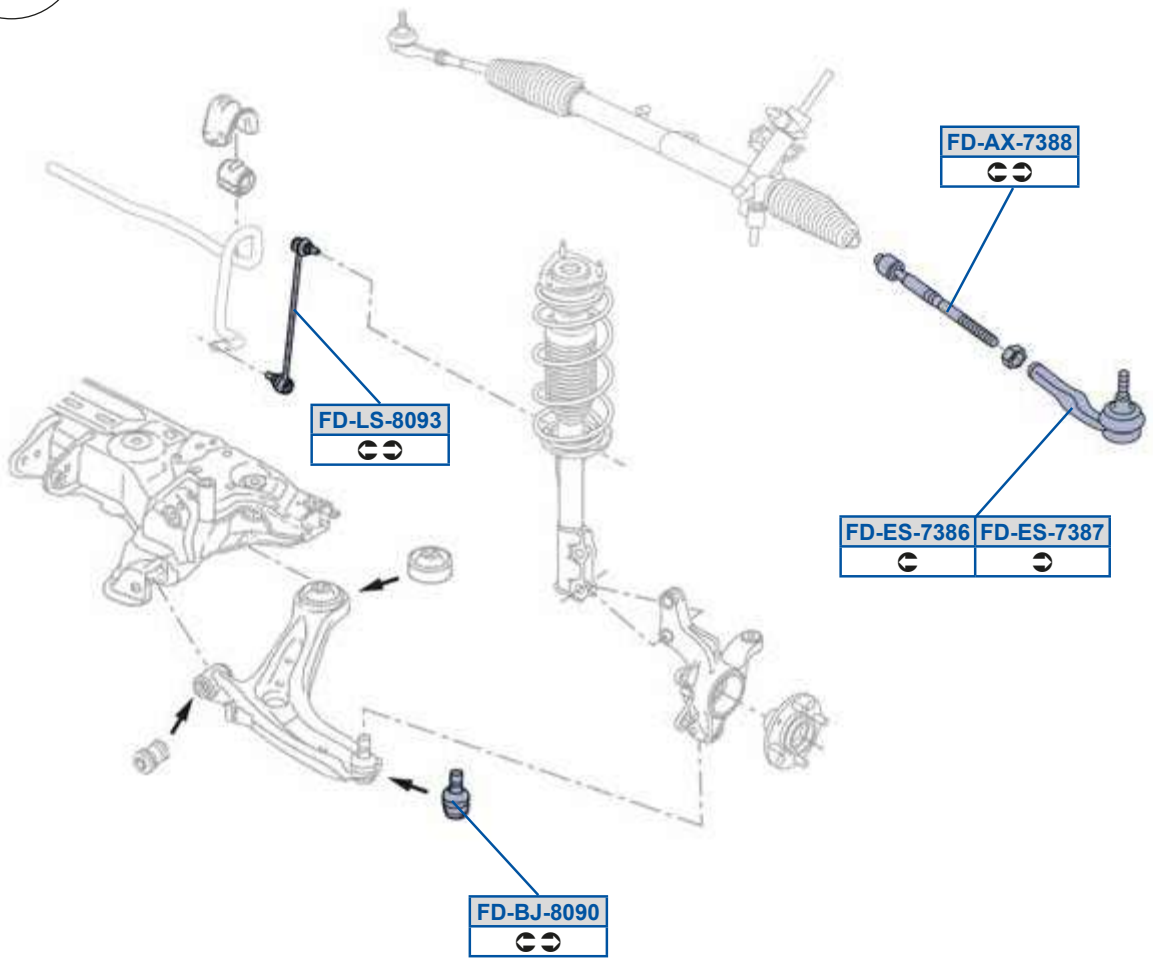

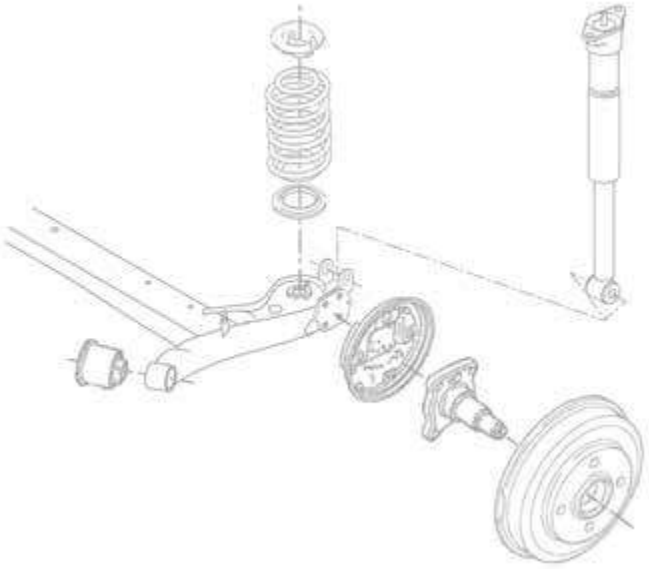

MOOG

TR5Oi 5EAFF

8CBCBCE3F C8AZC8G00

TR5PX5F8G8

8CB7E9B /40 38CB7E9C /40

TR5Sd5EAFD

8CBCAAG3F C8AQBAE00

TR5Sd5EAFE

8CBCAAF3F C8AQADE00

TR5Zd5F8GA

8C8AABA38EBCG9B

T_cR

SdQ_ce G9 S x 7Q éx 00gZ1	8E7G8	9; 7GB	SdQ_ce GC P 00gZ1	897GC	8F788
SdQ_ce g4gW0U0Z1	8E7G8	897GC	SdQ_ce g4gWP xt 0U0Z40gZ1	8E7G8	897GC
SdQ_ce g4gWQ x éu x 00ZZ1	8E7G8	897GC	SdQ_ce gW0U0Z400Z40PZ1	897GC	987GF
SdQ_ce gWQ x éu x 00ZZ1	8; 7GC	8F788	SdQ_ce gWe éx 0U0Z40] Z1	897GC	8; 7GG

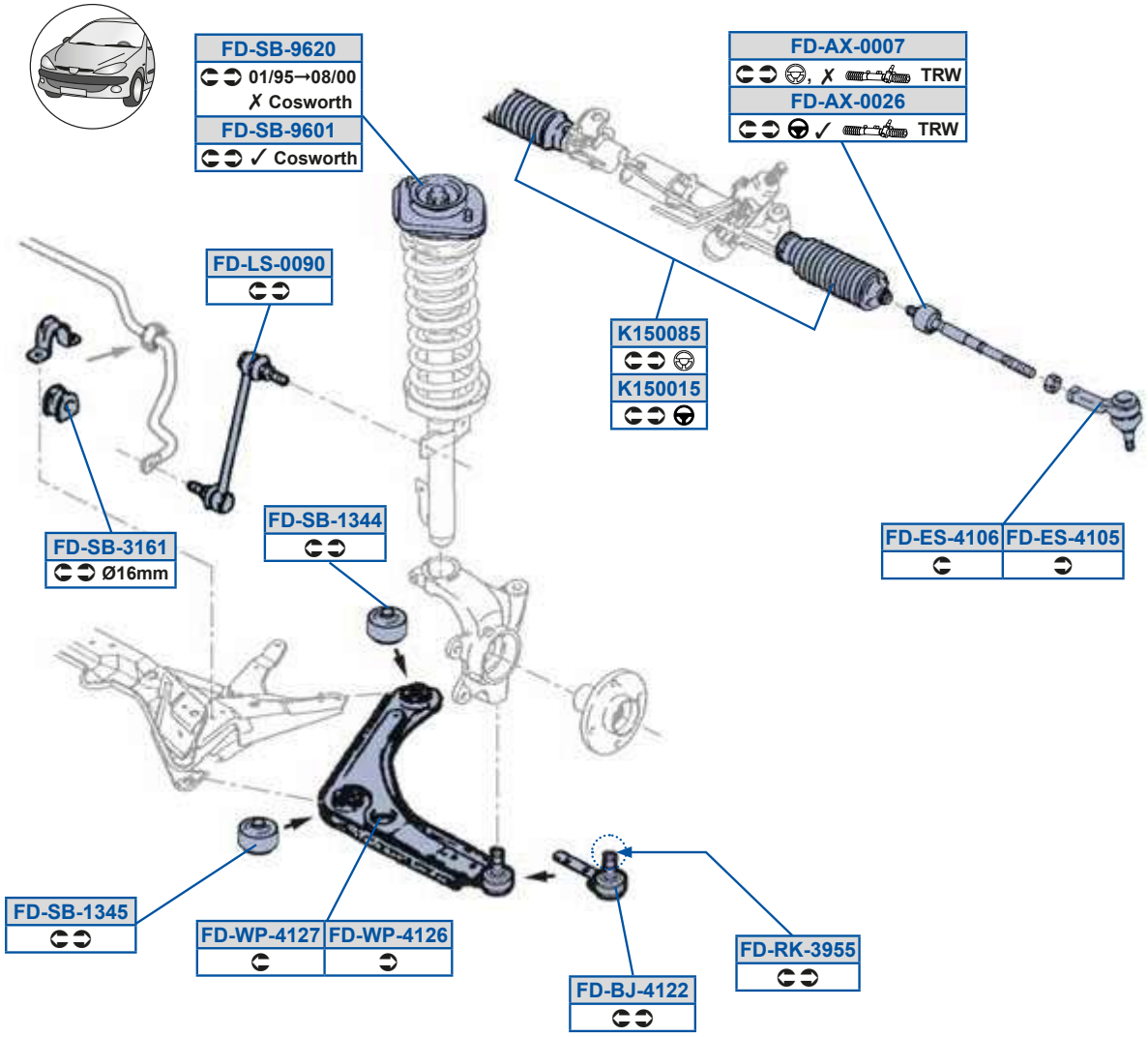

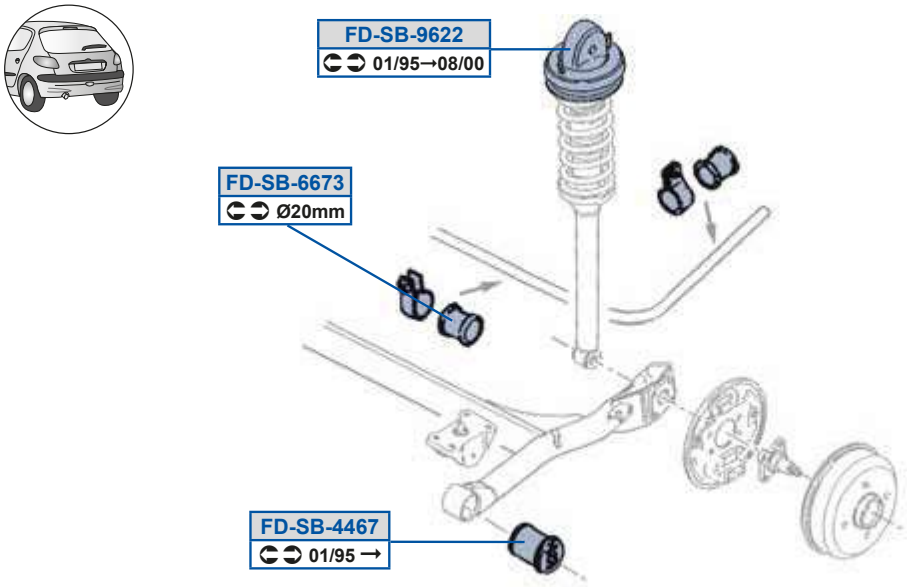

TR5Oi 5888E
879B8A73B88C7C7

TR5Oi 588>D
D8F7G993D8GE9AF

TR5PX5B9>>
87AAD8D387BEFCA

TR5Sd5B98C
878CCBD3878CCBE

TR5Sd5B98D
878CCBD3878CCBE

TR5Zd588G8
877B78F387D8DA8

TR5cY5AGCC

TR5dP59ABB
8777BBC387ACG9G

TR5dP59ABC
8777BBC387ACG9G

TR5dP5A9D9
88BC9E93D8FCF7G

TR5dP5BBDE
87B8GEG3EAE87CG

TR5dP5GD>8
EAC7FBE

TR5dP5GD>>
E9ABEA7

TR5h a5B9>D
87CF9EG3DC9CEBA

TR5h a5B9>E
87CF9F73DC9CFBB

Y9C889C
8D87ADC3D89FEAD

Y9C88FC
DGAC9AA3G9OPAYDD8OO

T_cR S t g4gW/gW5S v 09GG8 5L1

T_ cR

Q_f cWc P 0Kgr 1	8C7GF 8F78A	TWdeO 0KCr 4XAr 1	8; 7GD 8F78A
TWdeO Wg 0KOr 4XPr 1	8F7GC 8G78;		

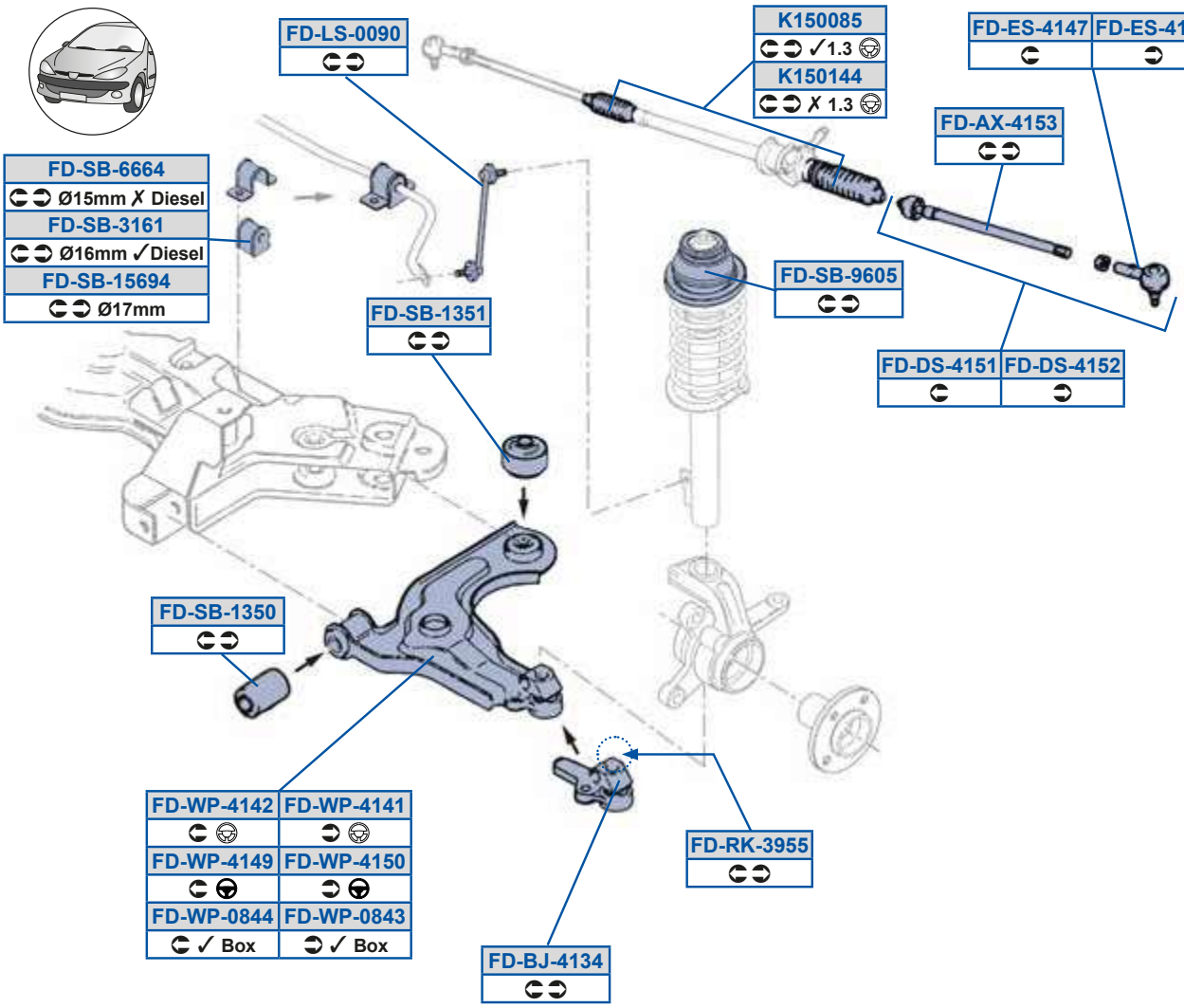

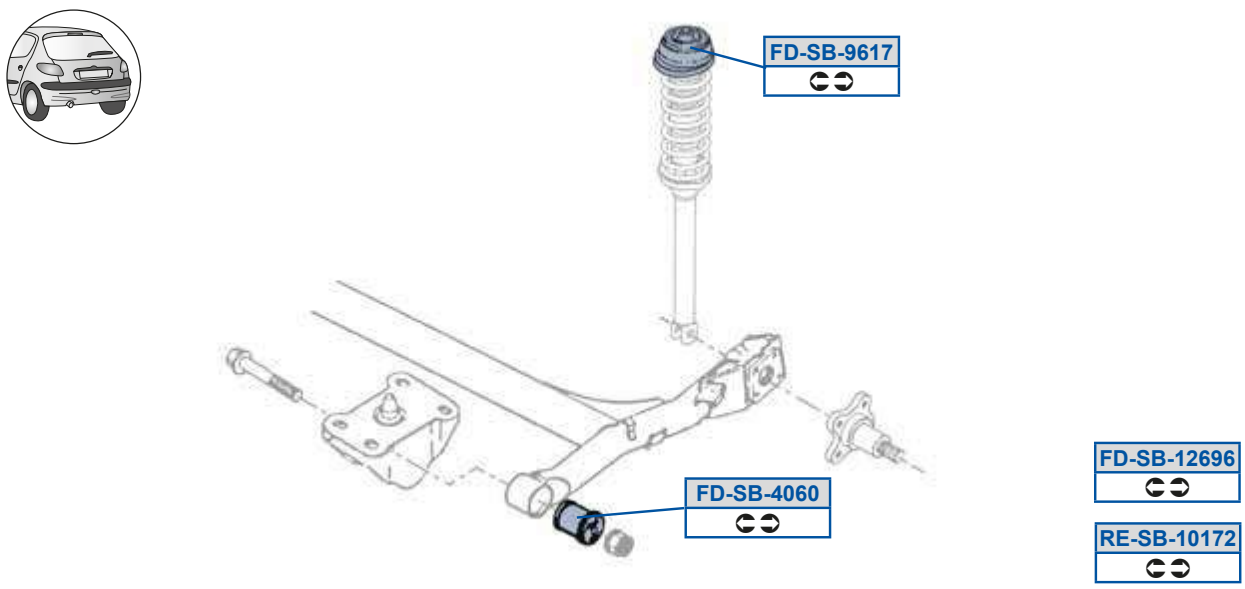

TR5Oi 5B9CA
87978EB /40387978EC /40

TR5PX5B9AB
87A779C387BEEGE

TR5Rd5B9C9
8788FCF38788FCF2 878BB7

TR5Rd5B9C>
8788FCE38788FCE2 87BB78

TR5Sd5B9BE
8788FCF387978EC

TR5Sd5B9BF
8788FCE387978EB

TR5Zd588G8
877B78F387D8DA8

TR5cY5AGCC

TR5cY5CDB9

TR5dP59>DGD
87BDBAA

TR5dP59AC8
87877AE387CC8G8

TR5dP59AC9
877B7883878BDCB

TR5dP59CDGB
887C9AA388BC9E8

TR5dP5A9D9
88BC9E93D8FCF7G

TR5dP5B8D8
878DBAG3GDTPCYDCAQO

TR5dP5DDDB
877AD7G3GDTPCBFBQO

TR5dP5GD8C
8779C8A3878AEGB

TR5dP5GD9E
879ACFE

TR5ha58FBA
87BD7AF387DA99A

TR5ha58FBB
87BD7E9387DA9BD

TR5ha5B9B9
878C9DA3879798B

TR5ha5B9B>
878C9DC38797997

TR5ha5B9BG
877GCGD3878C9DB

TR5ha5B9C8
878C9D73878C9DB

Y9C88FC
DGAC9AA3G9OPAYDD8OO

Y9C89BB
8789F8B38S78A989C

cS5dP5989E>
EA97AC8

T_cR Tzv r Vg 09GGC5L >88915Tzv r gr 7Q zv 09GGD5L1

T_ cR

TWSde0 g 0KVr 4XRr 1	99789	8A798	TWSde0 g gt	8B78E	8G78G
TWSde0 gt	9878A	9; 798	Tf dW] 0Xf r 1	8F78;	9; 79;

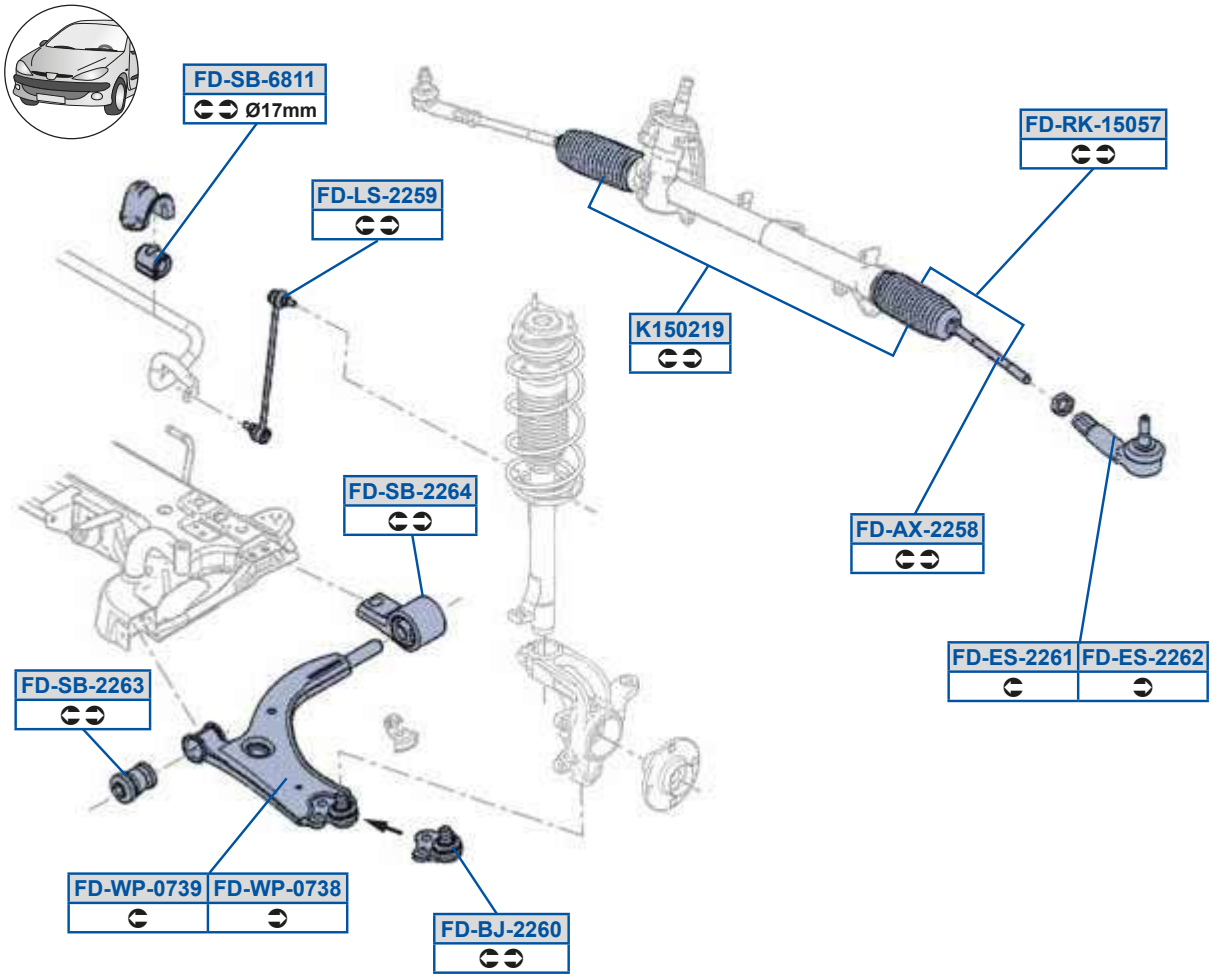

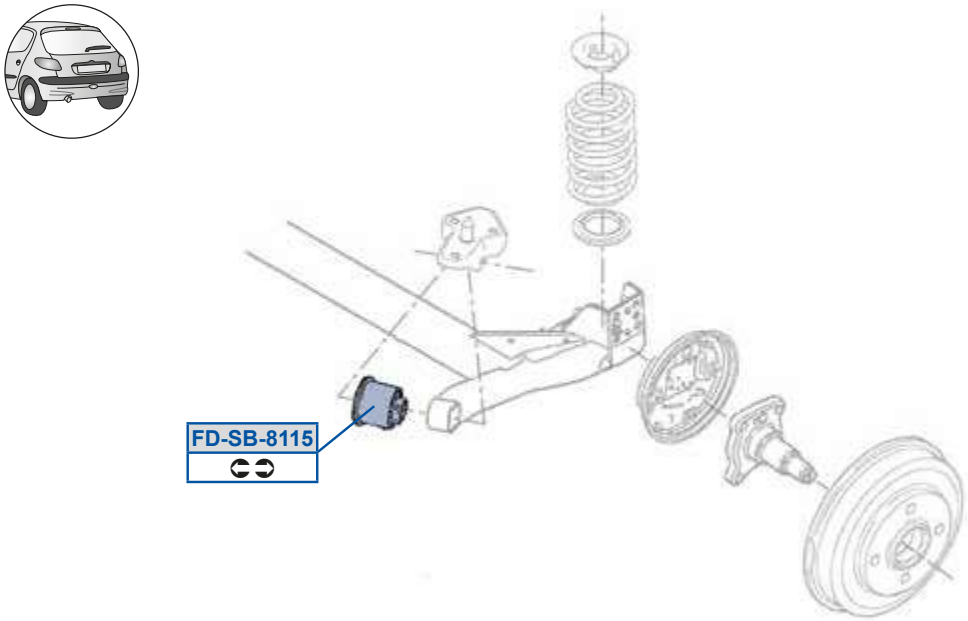

MOOG

TR5Oi 5>>CF
9oDQA9F7YO39oDQA9F7YP

TR5dP5DF99
88C9FC939oD8CBFBRO

TR5PX5>>D8
8989F7EF /40

TR5dP5F99C
88BD8D7

TR5Sd5>>D9
8979CBG39oDXA9G7OQ

TR5h a58EAF
88BD8A7388BGGA9

TR5Sd5>>D>
8979CBF39oDXA9FGOQ

TR5h a58EAG
88BD8A8388BGGAA

TR5Zd5>>CG
88BD8C738BDG989

Y9C8>9G
9oDQAYDD8XP3BAA7D9F

TR5cY59C8CE
9oDQA9F7YO39oDQA9F7YP

TR5dP5>>DA
88BD8A7 /40388BD8A8 /40

TR5dP5>>DB
88BD8A7 /40388BD8A8 /40

T_ cR

TWSde0 gW	9878F	TWSde0 gWgt	8G79;
TWSde0 gt	8978G		

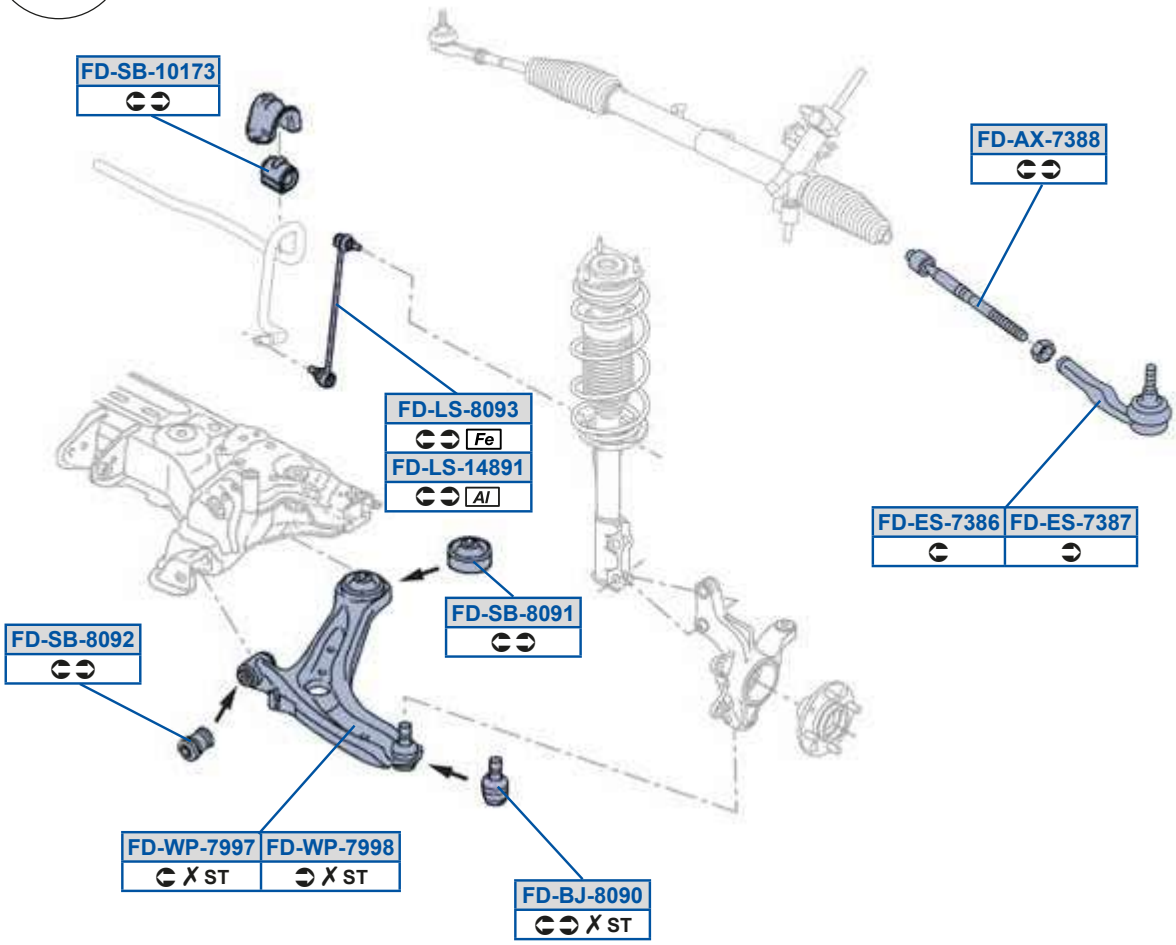

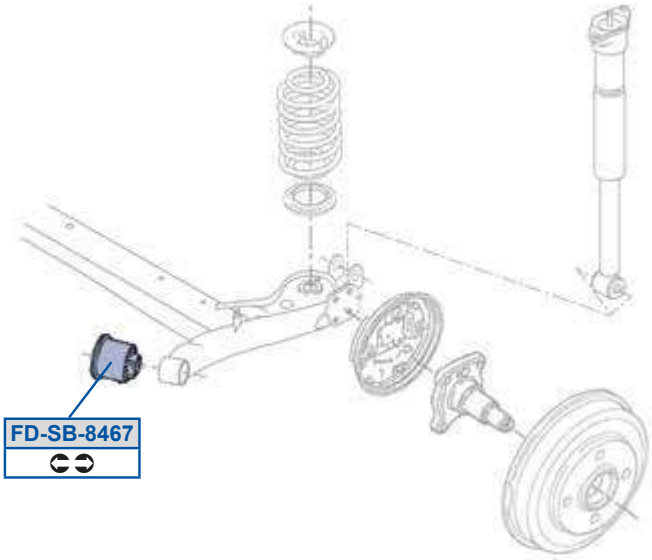

MOOG

TR5Oi 5EAFF
8CBCBCE3F C8AZC8G00

TR5dP5F8G>
8CB7E9C /40

TR5PX5F8G8
8CB7E9B /40 38CB7E9C /40

TR5dP5FBDE
8CAC9GD38F7CF8C

TR5Sd5EAFD
8CBCAAG3F C8AQBAE00

TR5h a5EGGE
8C98EEA38CA9BAA

TR5Sd5EAFE
8CBCAAF3F C8AQADE00

TR5h a5EGGF
8C8FG7B38C97EEF

TR5Zd59BFG9
8C8AABA38EBCG9B

TR5Zd5F8GA
8C8AABA38EBCG9B

TR5dP5989EA
8C9FA8B3F C8CBFB0P

TR5dP5F8G9
8CB7E9C /40

T_ cR

T_Qf d 0ROh 4RPh 1	987GF 9; 78E	T_Qf d dt 0RTh 1	8; 7GG 9; 78E
T_Qf d e éx 0R] h 1	8; 7GG 9; 78E		

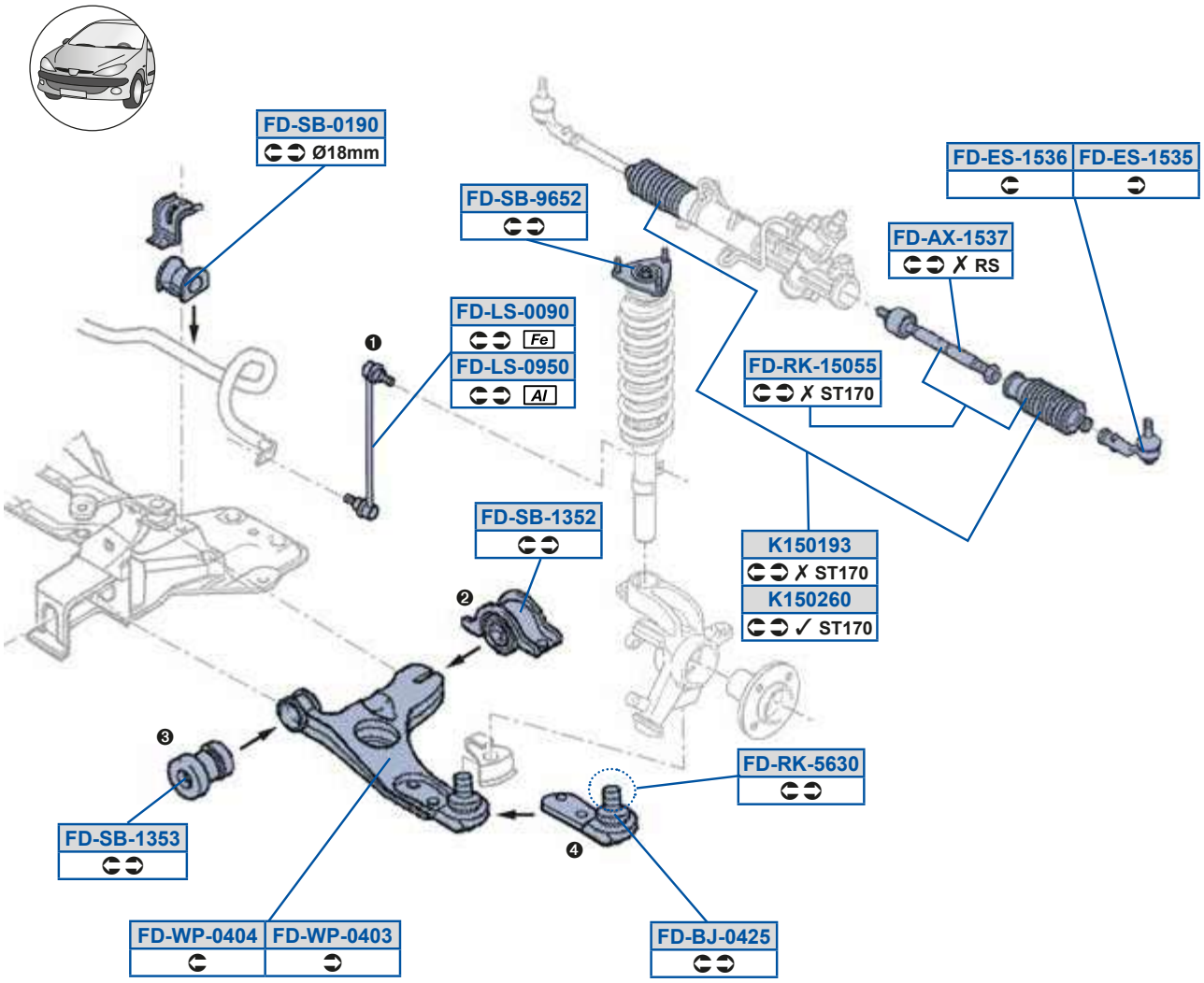

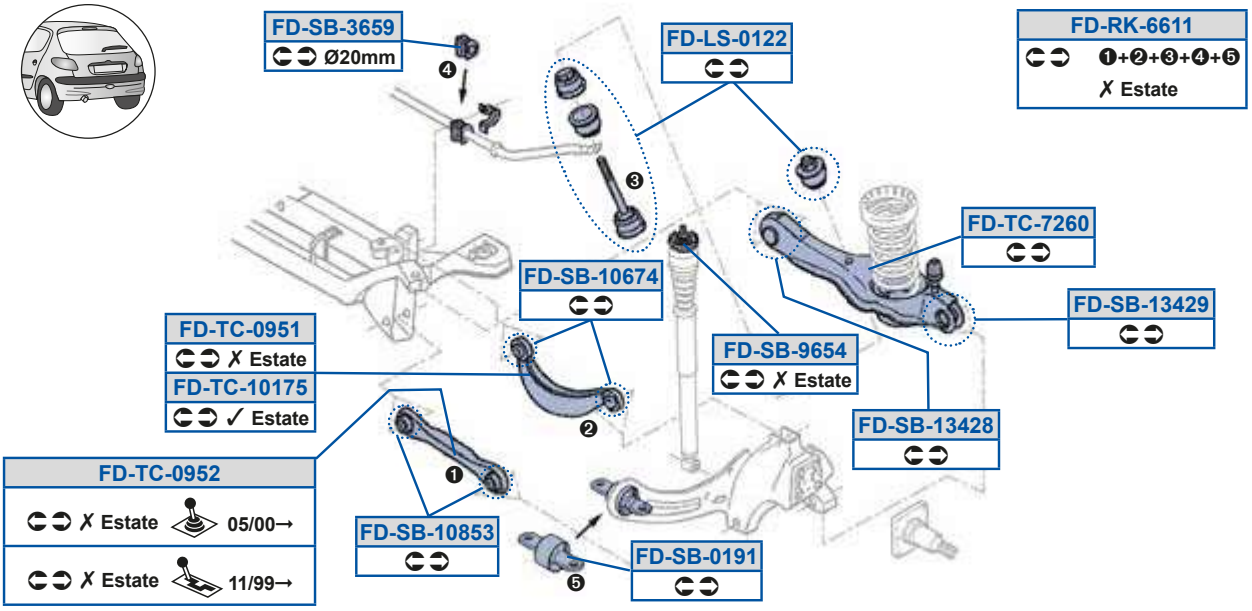

MOOG

TR5Oi 59CAE
87FCC973AE7EAAA

TR5PX58B>C
87D8DA838DEGB78

TR5Sd59CAC
87EBA7C3887E78A

TR5Sd59CAD
87EBA7D3887E78C

TR5Zd588G8
877B78F387D8DA8

TR5Zd589>>
87D8E793897A7GA

TR5Zd58GC8
87D8DA83887D9DG

TR5cY59C8CC
87FCC973AE7EAAA

TR5cY5CDA8

TR5cY5DD99

TR5dP589G8
87EA98E3GF0UCBFBR0

TR5dP589G9
87D8DE738A7B89B

TR5dP598DEB
87D8DCG /4Q88A9GEA7 /40

TR5dP598FCA
87D8DDF /40

TR5dP59AB>F
87DB89F /40

TR5dP59AB>G
87DB89F /40

TR5dP59AC>
87DEF8G387DEG8F

TR5dP59ACA
87D8CE73GF0UA7DA0S

TR5dP5ADCG
87EA9BG3GF0UB07AEP0

TR5dP5GDC>
87FE8EE

TR5dP5GDCB
oB 8F08D8000

TR5eQ58GC9
87D8DCG388AD7E9

TR5eQ58GC>
87D8DDF3887CC9B

TR5eQ5989EC
87D8DD7388AD7EA

TR5eQ5E>D8
87D8DDD387DB89F

TR5hA58B8A
87EA98B387G7EA7

TR5hA58B8B
87EA98C387G7EAF

Y9C89GA
87FCC8E3D8F9F8F

Y9C8>D8
B7BC9C73 oBQAYDD8P0

T_ cR

Q5[Oi	8; 78E 8G798	T_Qf d Q5[Oi	9878A 8A78E
T_Qf d WOR Or 4VQa1	9978B 8G79;	T_Qf d WQ x éu x	9878D 8G798
T_Qf d Wdt ORPr 1	8B78C	T_Qf d Wé éx OROr 1	9978B 8G79;

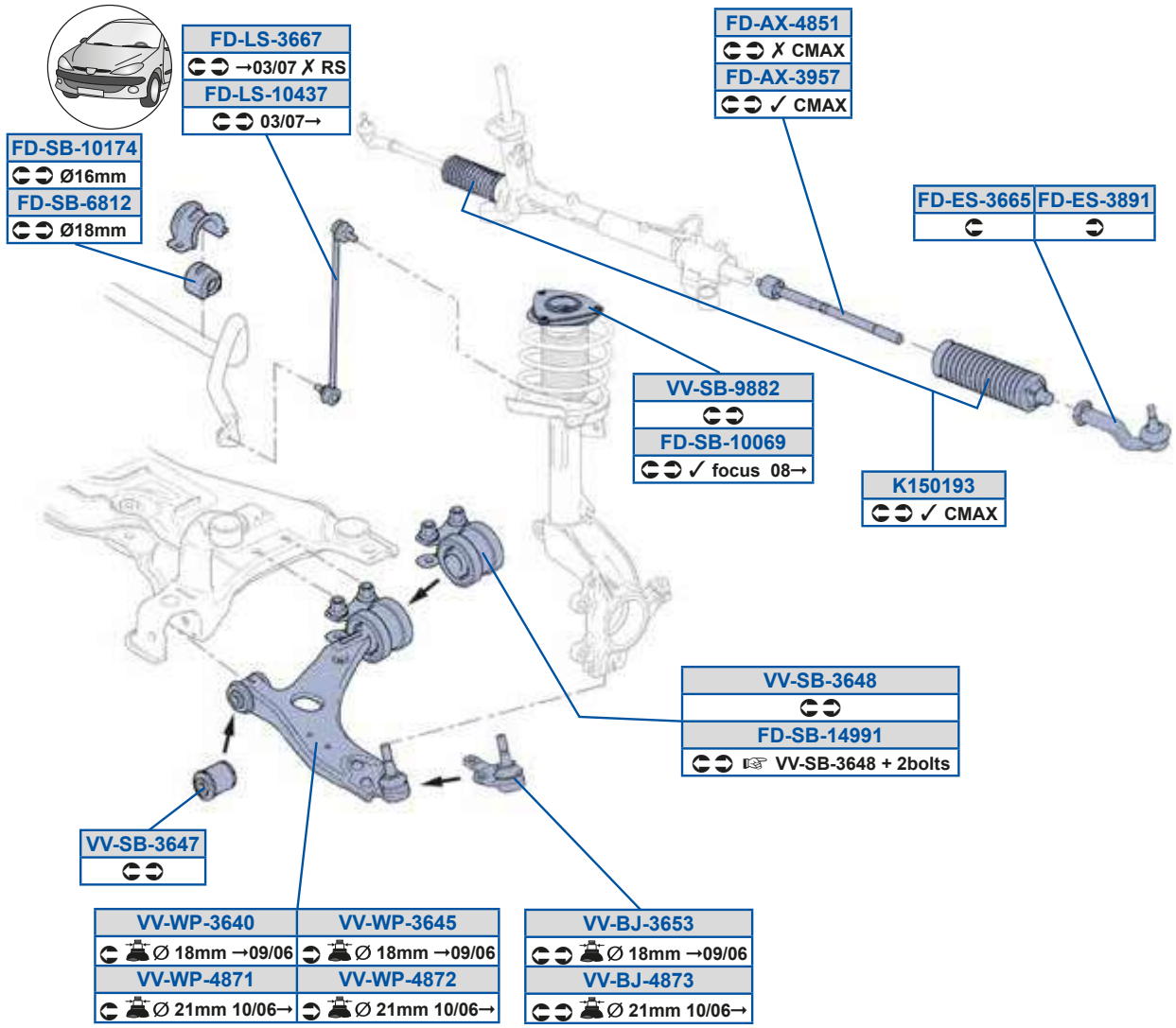

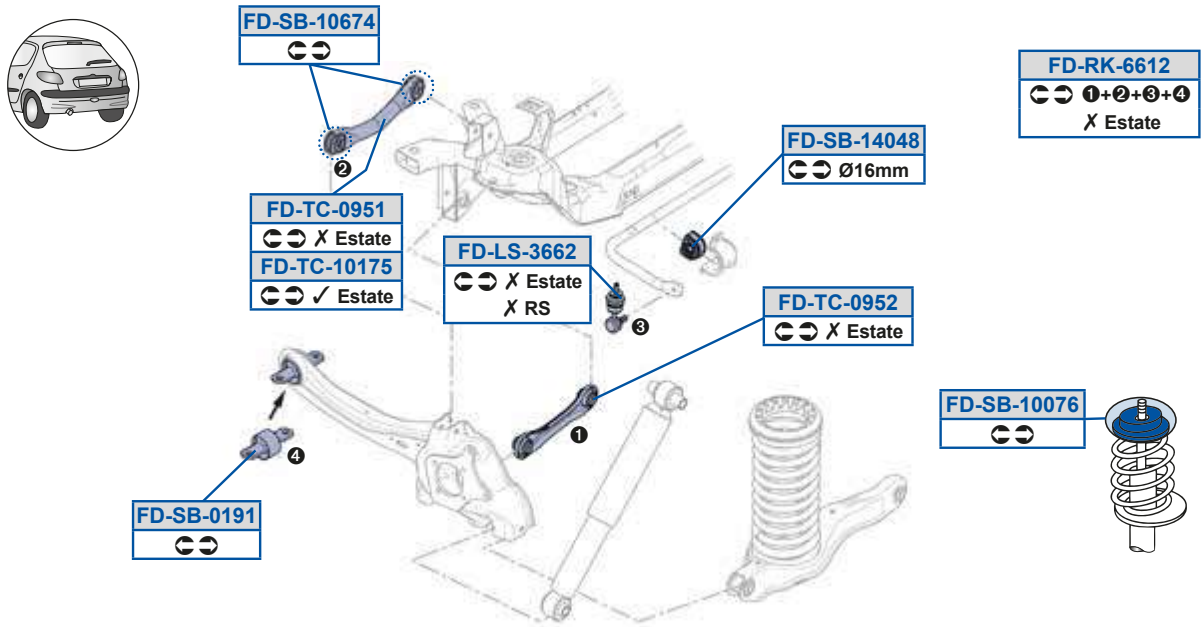

MOOG

TR5Oi 5AGCE
89C8GAE38C879E7

TR5dP589G9
87D8DE738A7B89B

TR5eQ58GC9
87D8DCG388AD7E9

gg5dP5GFF>
A7DF8CBD

TR5Oi 5BFC9
8A8EBCA38AEEDCC

TR5dP5988DG
DoB A08GE03FoB 8F8GF0

TR5eQ58GC>
87D8DDF3887CC9B

gg5h a5ADB8
89ABAEC389CBA88

TR5Sd5ADDC
8A8C7EB38A8C7FA

TR5dP5988ED
PAET9FG87P3PAET9FG87Q

TR5eQ5989EC
87D8DD7388AD7EA

gg5h a5ADBC
89ABAE8389CBA87

TR5Sd5AFG9
8A8C7EB38A8C7FA

TR5dP5989EB
8ABF9A83AdD8CBFB00

Y9C89GA
87FCC8E3D8F9F8F

gg5h a5BFE9
89ABAEC389CBA88

TR5Zd598BAE
8C77DF938E8GCB9

TR5dP598DEB
87D8DCG/4088A9GEA7/40

gg5PX5ADCA
89ABAF938DEGAFB

gg5h a5BFE>
8B97EGC38BFF887

TR5Zd5ADD>
899AG9A389A8BC9

TR5dP59B8BF
8ABCG8A

gg5PX5BFEA
8BE7AFE38DEGAFF

TR5Zd5ADDE
899AEG9389A7G7G

TR5dP59BGG9
8BEEFCF3A7DEFBB7

gg5dP5ADBE
A7E8B89F

TR5cY5DD9>

TR5dP5DF9>
8A7CGD73Aa C8CBFBQ0

gg5dP5ADBF
A7DEFBB7

T_cR T t W0097>88B5L17T t Q5[r

T_ cR

T_Qf d WW	8B799	T_Qf d WWP P w 7S t x	8; 79;
T_Qf d WWP P w 7Vt vÉut v	89799	T_Qf d WWS t x	8C799
T_Qf d WWdt	8B799	T_Qf d WWe éx	8; 79;

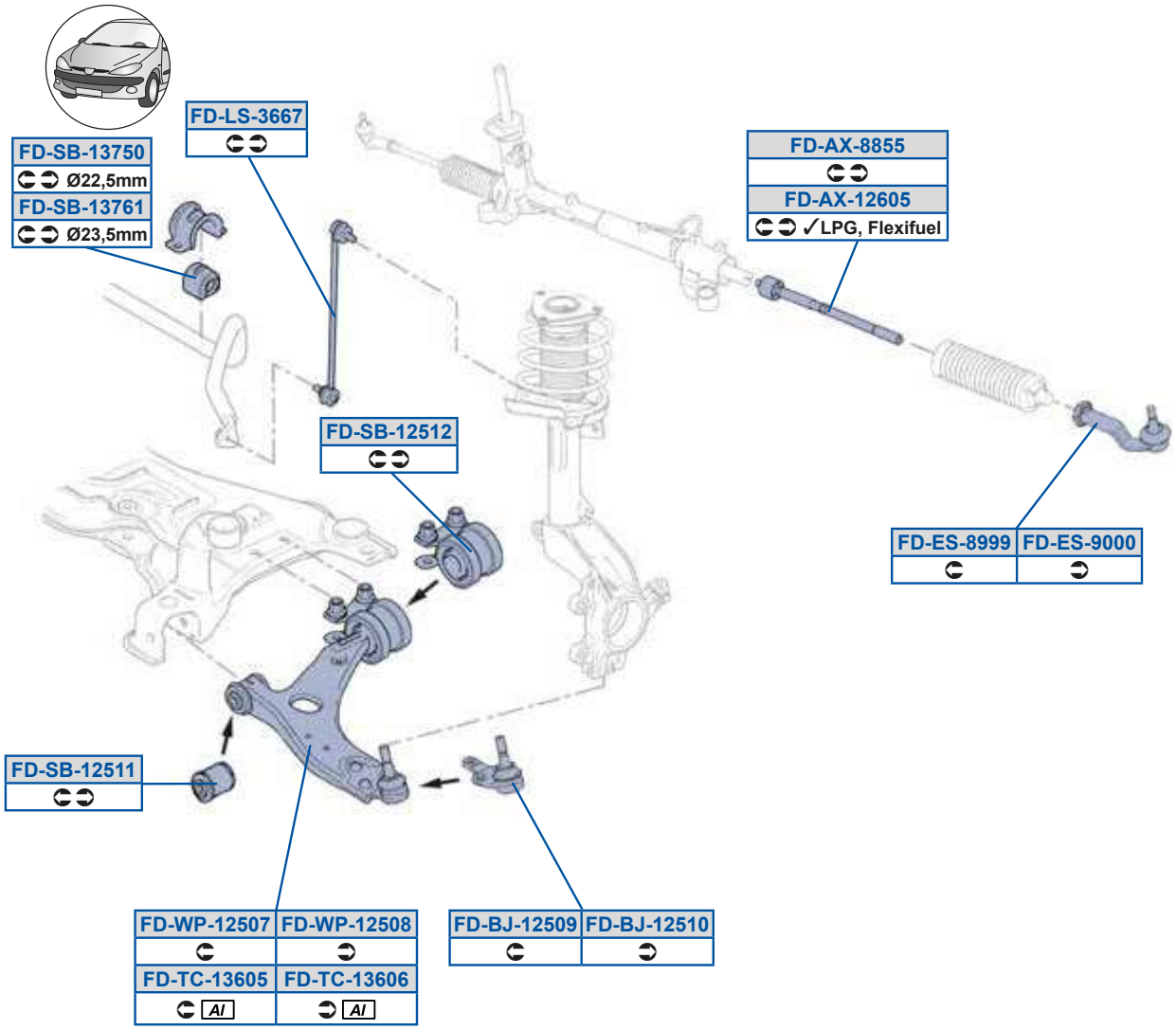

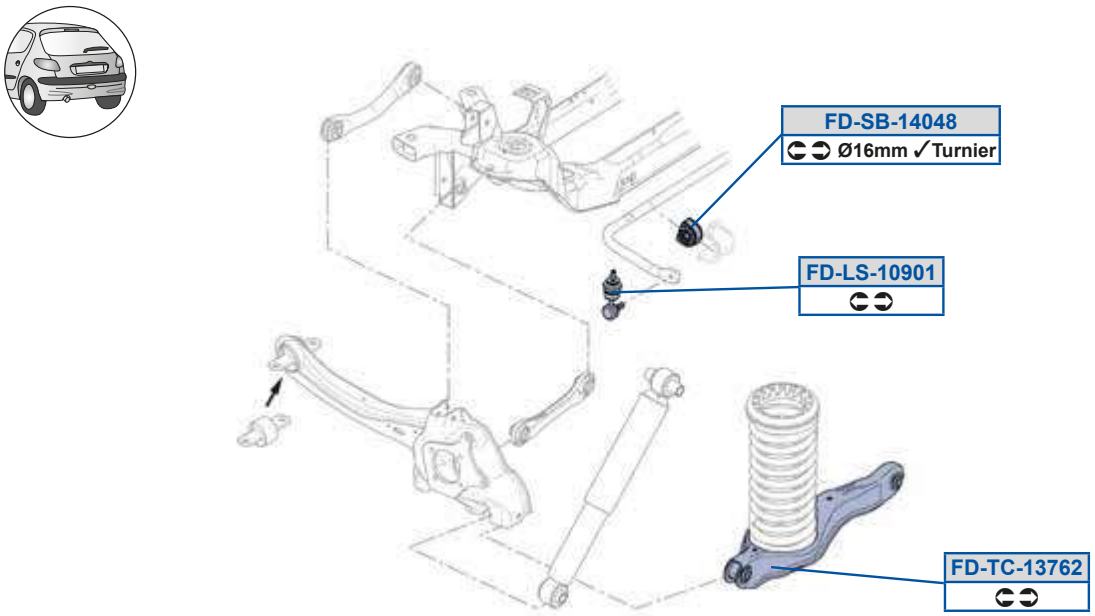

MOOG

TR5Oi 59>D8C
8ECB7ED38FADDBG

TR5Oi 5FFCC
8E8BBFB38E8CB8B

TR5PX59>C8G
8E7GBDD /40

TR5PX59>C98
8E7GBCE /40

TR5Sd5FGGG
8E8BE7738EBF9AG

TR5Sd5G888
8E8BCED38EBF9AE

TR5Zd598G89
8DG8F8C38E78BDD

TR5Zd5ADDE
899AEG9389A7G7G

TR5dP59>C99
8E7GBCE /4Q38E7GBDD /40

TR5dP59>C9>
8E7GBCE /4Q38E7GBDD /40

TR5dP59AEC8
8DFD8FA30 D8CBFBOO

TR5dP59AED9
8 DFA BF838 F87 A9D

TR5dP59B8BF
8ABCG8A

TR5eQ59AD8C
8E7GBDF38EBGGG9

TR5eQ59AD8D
8E7GB9A38EBGCGA

TR5eQ59AED>
8DFDE7C38DGBCDG

TR5h a59>C8E
8E79GFA38E7GBDD

TR5h a59>C8F
8E79GE738E7GBCE

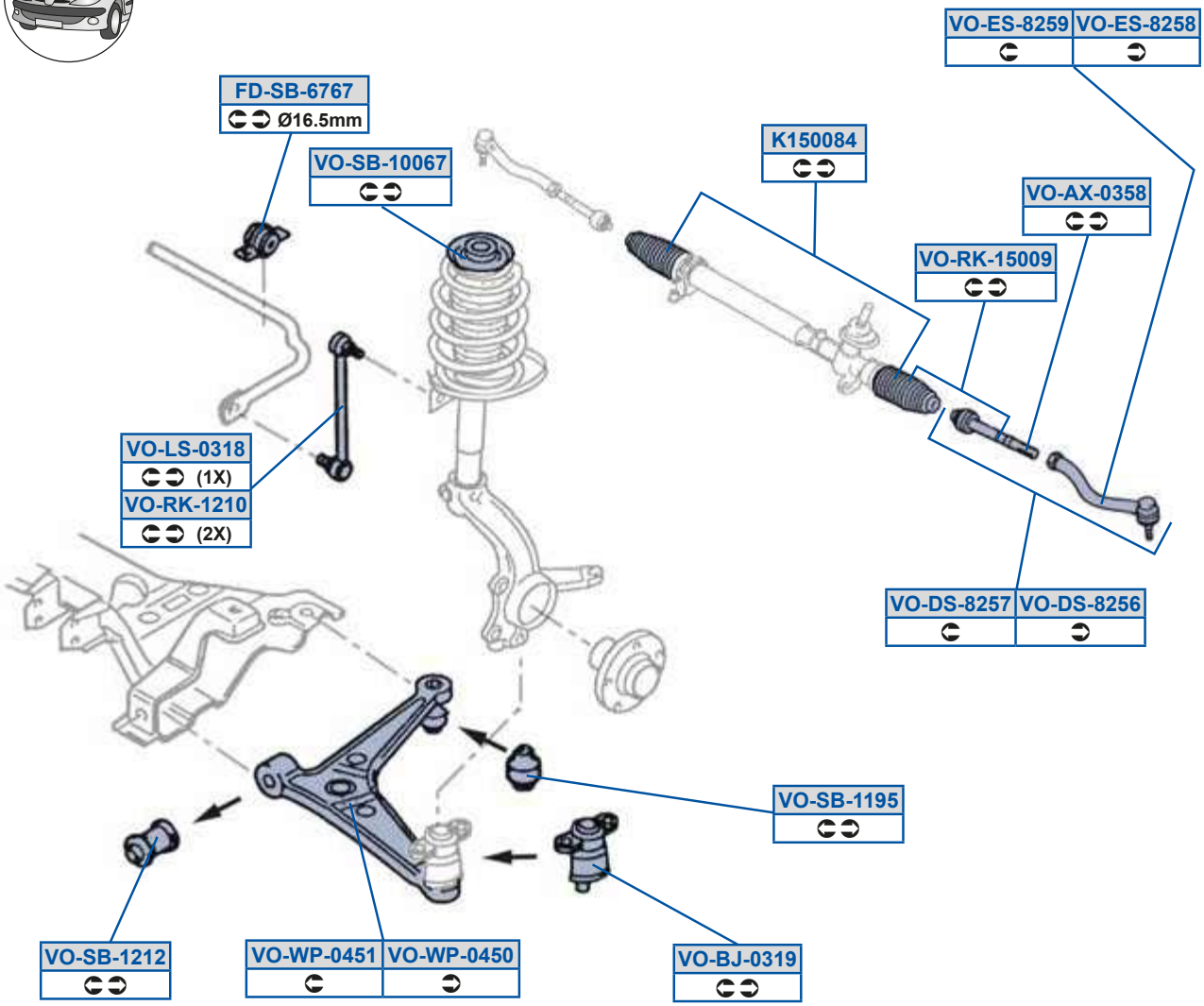
VO-ES-8259
VO-ES-8258
FD-SB-6767
Ø16.5mm
VO-SB-10067
K150084
VO-AX-0358
VO-RK-15009
VO-LS-0318
(1X)
VO-RK-1210
(2X)
VO-DS-8257
VO-DS-8256
VO-SB-1195
VO-SB-1212
VO-WP-0451
VO-WP-0450
VO-BJ-0319

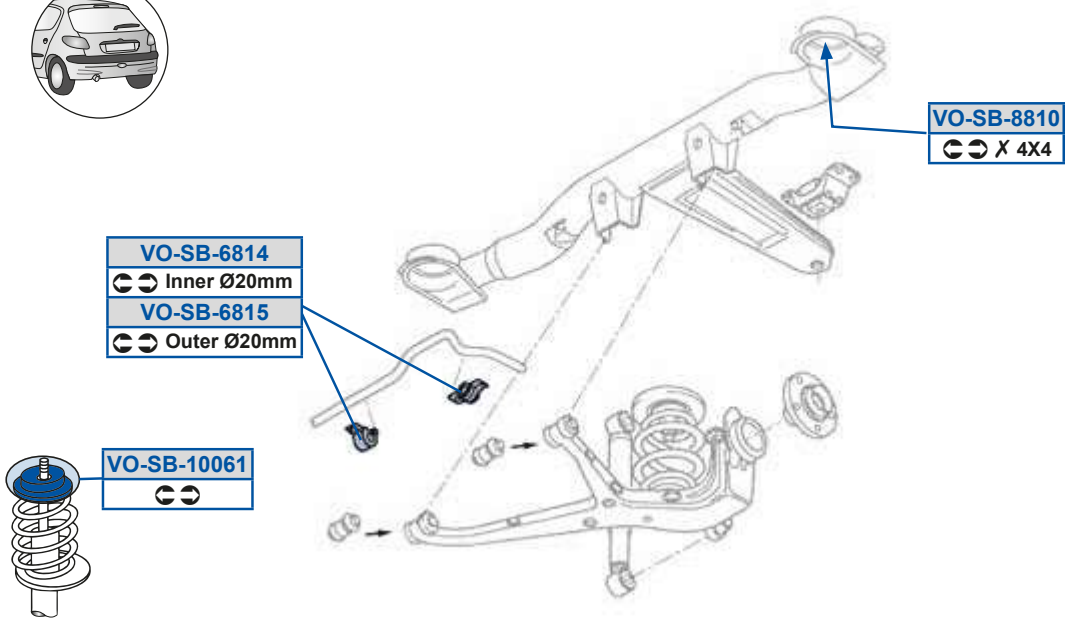
VO-SB-8810
X 4X4
VO-SB-6814
Inner Ø20mm
VO-SB-6815
Outer Ø20mm
VO-SB-10061

TR5dP5DEDE
E977GCE3GC CBFBOP

g_ 5Zd58A9F
877GCG8388B8EEB

g_ 5dP5DF9C
877GDBG

Y9C88FB
EAGFDF73GC AYDD8OQ

g_ 5c Y59>98
Ea ABGFA8E

g_ 5dP5FF98
E978E9A

g_ 5Oi 58ACF
8778AGF38898C7G

g_ 5c Y59C88G
8778AGF38898C7G

g_ 5h a58BC8
877ED7938789DA9

g_ 5PX58A9G
88888CD3E977GBD

g_ 5dP5988D9
8E8C8AAAA38G8C89AAA

g_ 5h a58BC9
877ED7938789DA9

g_ 5Rd5F>CD
8778AGC38778AGD

g_ 5dP5988DE
8X7B899BG3ACEB899BG

g_ 5Rd5F>CE
8778AGE38797BGE

g_ 5dP599GC
87BBCE83EAGDFA7

g_ 5Sd5F>CF
87CFAEE387CFAEF

g_ 5dP59>9>
E978E8E

g_ 5Sd5F>CG
87CFAF7387G9AF7

g_ 5dP5DF9B
8778E8A

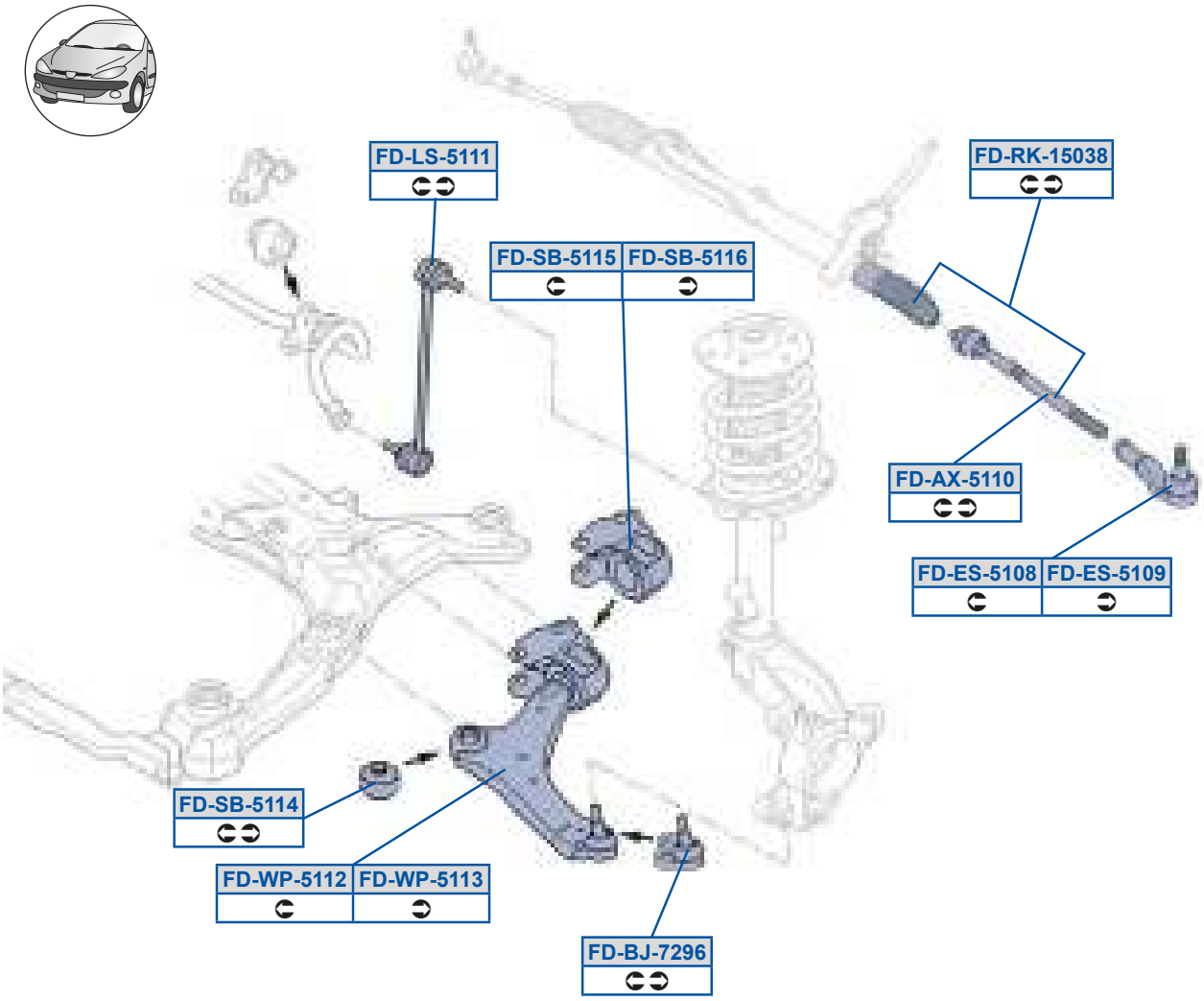
FD-LS-5111
FD-SB-5115
FD-SB-5116
FD-RK-15038
FD-AX-5110
FD-ES-5108
FD-ES-5109
FD-SB-5114
FD-WP-5112
FD-WP-5113
FD-BJ-7296

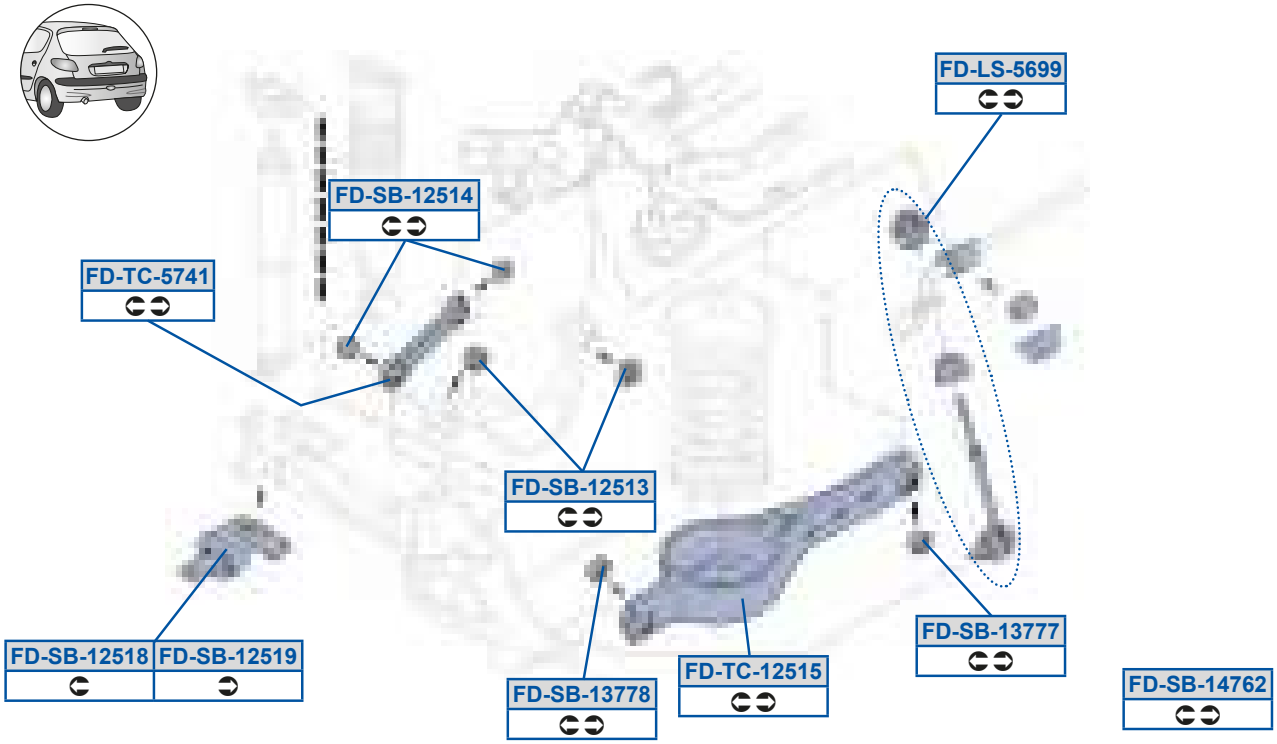
FD-LS-5699
FD-SB-12514
FD-TC-5741
FD-SB-12513
FD-SB-12518
FD-SB-12519
FD-SB-13778
FD-TC-12515
FD-SB-13777
FD-SB-14762

TR5Oi 5C998
8BAA9E838CGDCEB

TR5dP59>C9B
8B9DEE7 /40

TR5dP5C99D
8BDD8FD /4C38BDD8FF /40

TR5PX5E>GD
8BDD8FD /4C38BDD8FF /40

TR5dP59>C9F
8CDDFAE38CDDFAF

TR5eQ59>C9C
8AEEBBE38AF8BB9

TR5Sd5C98F
8BAA9EB3DUG8A9G7OO

TR5dP59>C9G
8CAAFAD38CDDF87

TR5eQ5CEB9
8AEEBBG38AF8BBA

TR5Sd5C98G
8BAA9EA3DUG8A9FGOO

TR5dP59AEEE
8AEEBBE /4C38AF8BB9 /40

TR5h a5C99>
8AEEFBF38AFCCGB

TR5Zd5C999
8AEEFBG38BAA9GB

TR5dP59AEEF
8AEEBBE /4C38AF8BB9 /40

TR5h a5C99A
8BCFEEA38BDD8FD

TR5Zd5CDGG
8AEEB8D38B9CFCA

TR5dP59BED>
8BAE8G93A7ED7G98

TR5cY59C8AF
8BAA9E838CGDCEB

TR5dP5C99B
8BDD8FD /4C38BDD8FF /40

TR5dP59>C9A
8BCED7G /40

TR5dP5C99C
8BDD8FD /4C38BDD8FF /40

YO 0cPr1	8G7GD 9978F	YO gt 0cP1	8C78; 8C78C

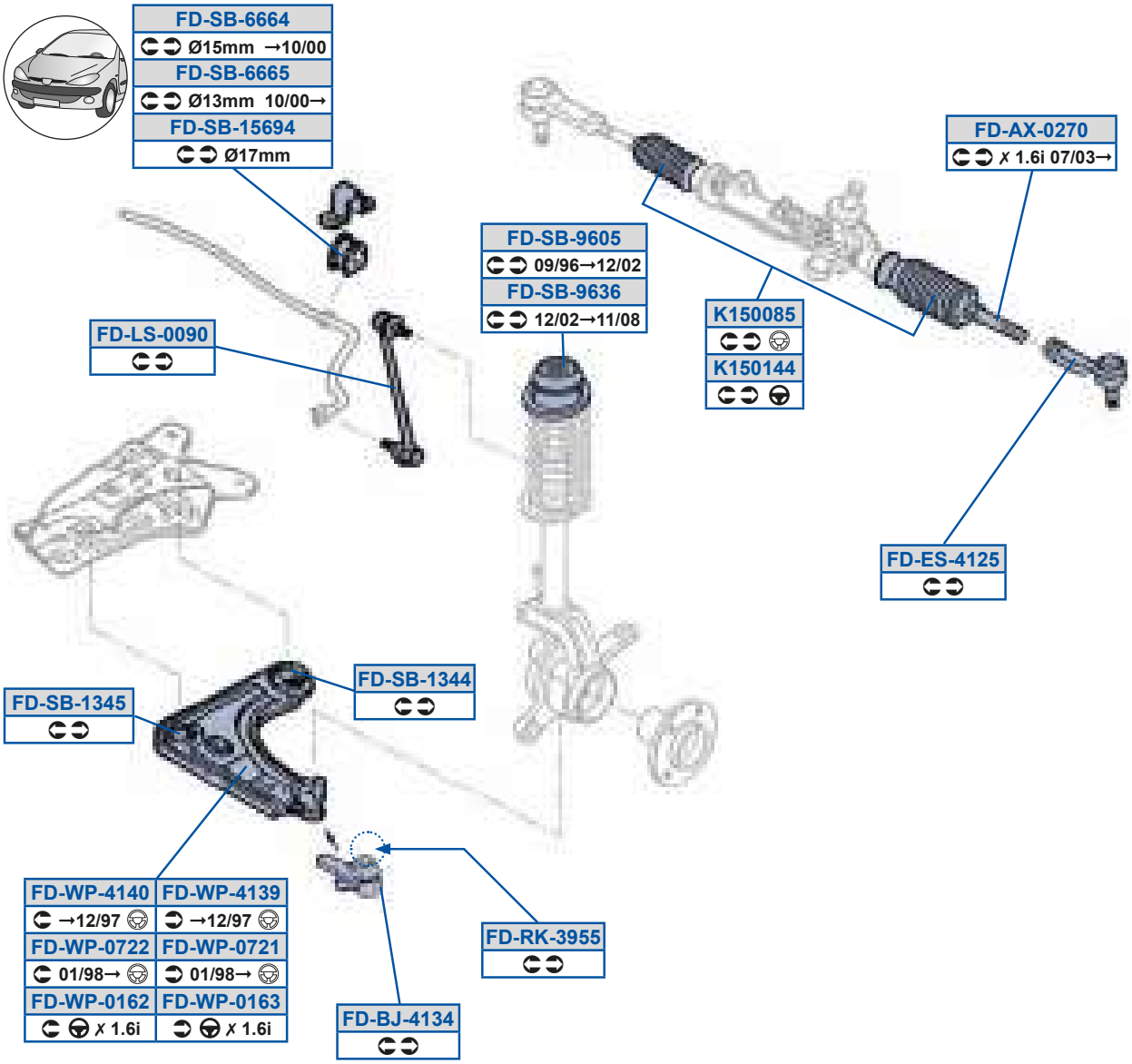

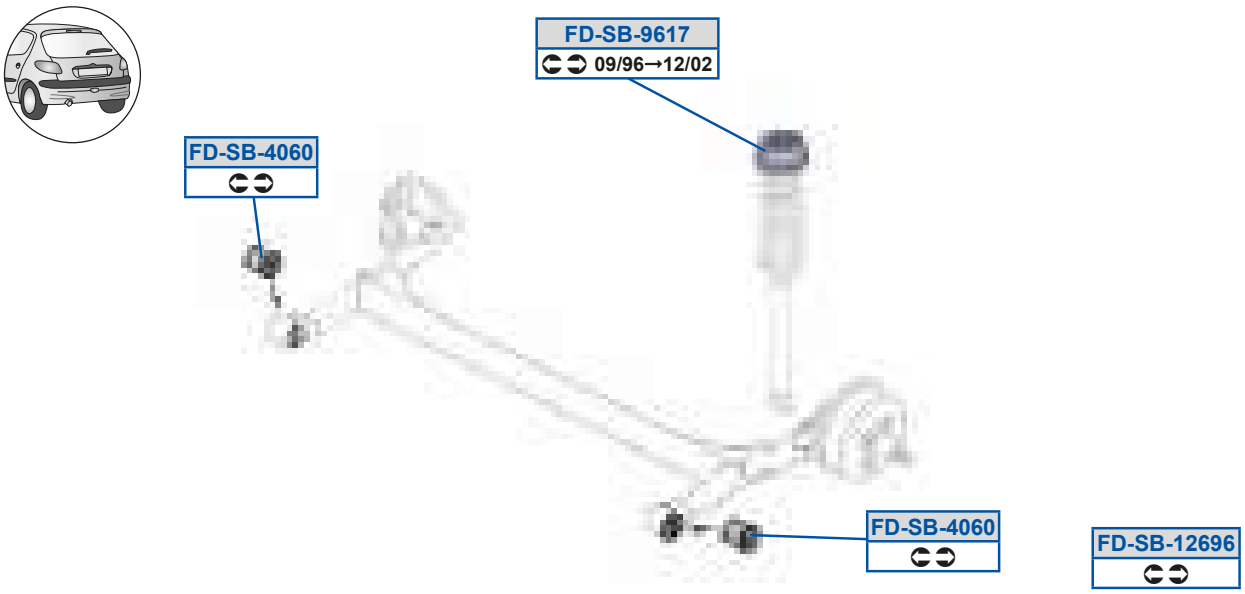

MOOG

TR5Oi 58>E8
B7BFEAG3DDAG8FF

TR5PX5B9AB
87A779C387BEEGE

TR5Sd5B9>C
87A9CDE387A9DFG

TR5Zd588G8
877B78F387D8DA8

TR5cY5AGCC

TR5dP59>DGD
87BDBAA

TR5dP59ABB
8777BBC387ACG9G

TR5dP59ABC
8777BBC387ACG9G

TR5dP59CDGB
887C9AA388BC9E8

TR5dP5B8D8
878DBAG3GDTPCYDCAQO

TR5dP5DDDB
877AD7G3GDTPCBFBQO

TR5dP5DDDC
87ACC8C3GEYPCBFBOO

TR5dP5GD8C
8779C8A3878AEGB

TR5dP5GD9E
879ACFE

TR5dP5GDAD
87AG778

TR5ha589D>
879FBBA387A9878

TR5ha589DA
879FBAF387A97GG

TR5ha58E>9
87DAGFE38888B87

TR5ha58E>>
87A9879387AGF7D

TR5ha5B9AG
87A9877387A9879

TR5ha5B9B8
87A9879387BDBCF

Y9C88FC
DGAC9AA3G90PAYDD8OO

Y9C89BB
8789F8B38S78A989C

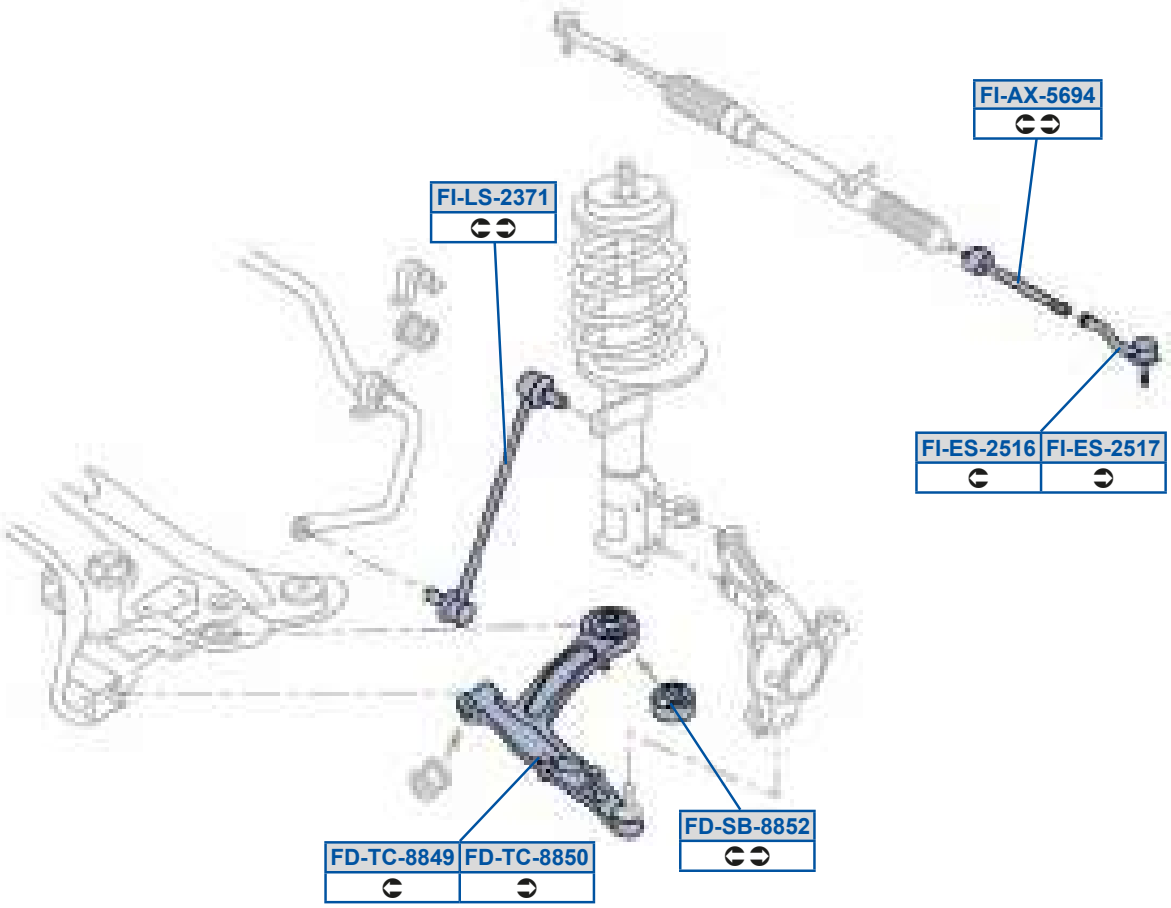
FI-AX-5694
FI-LS-2371
FI-ES-2516
FI-ES-2517
FD-SB-8852
FD-TC-8849
FD-TC-8850

TR5dP5FFC>
8CB79BB /40 38CB79BD /40

TR5eQ5FFBG
8CB79BB38CF7C8B

TR5eQ5FFC8
8CB79BD38CF7C8C

TV60i 5CDGB
8CB8ACB38CB8ACC

TV6Sd5>C9D
8CBD9CG3GoC8A9E70O

TV6Sd5>C9E
8CBD9D73GoC8A9E7PO

TV6Zd5>AE9
8CB79F838CF7C8E

Yr W

T_cR

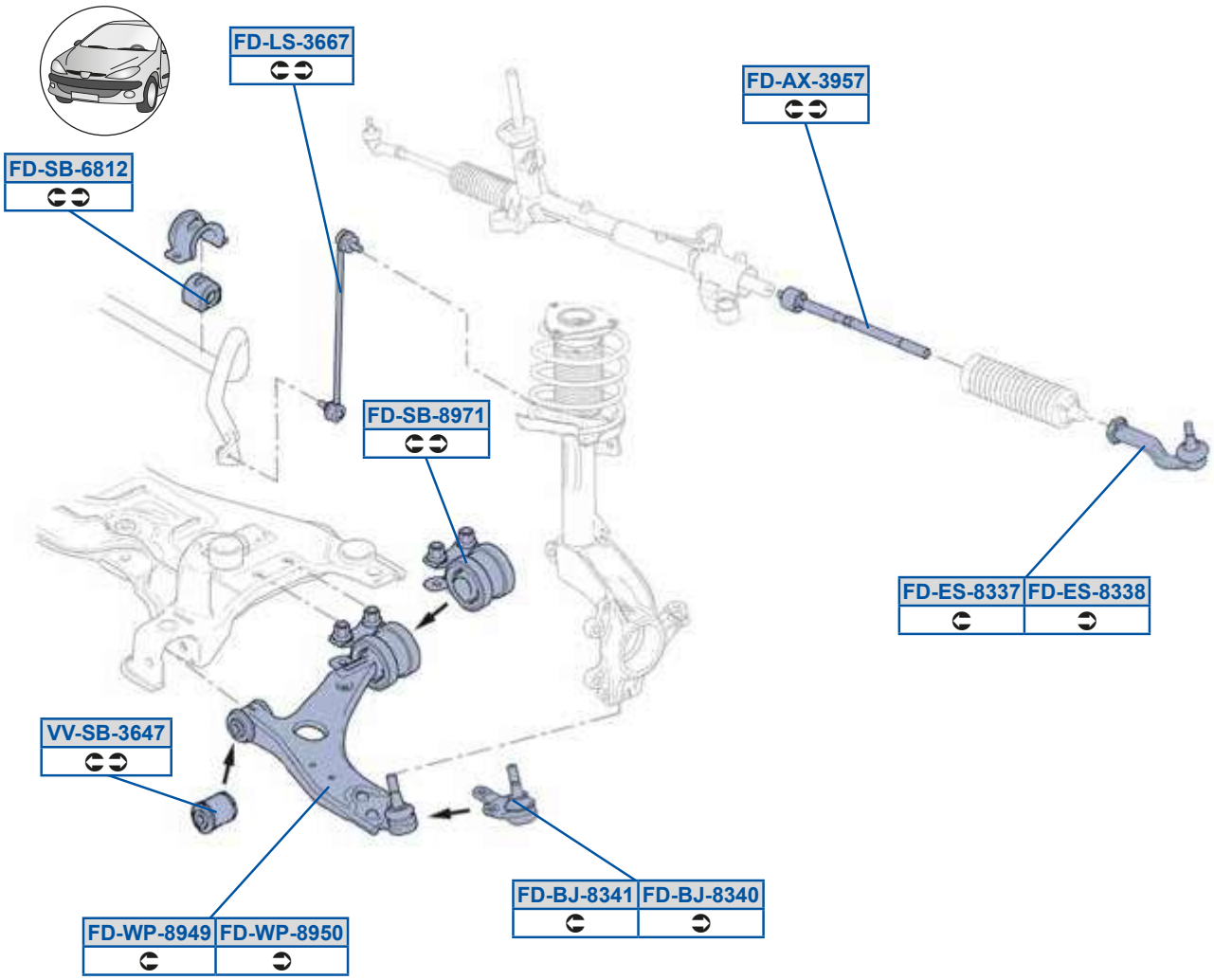
FD-LS-3667
FD-AX-3957
FD-SB-6812
FD-SB-8971
FD-ES-8337
FD-ES-8338
VV-SB-3647
FD-BJ-8341
FD-BJ-8340
FD-WP-8949
FD-WP-8950

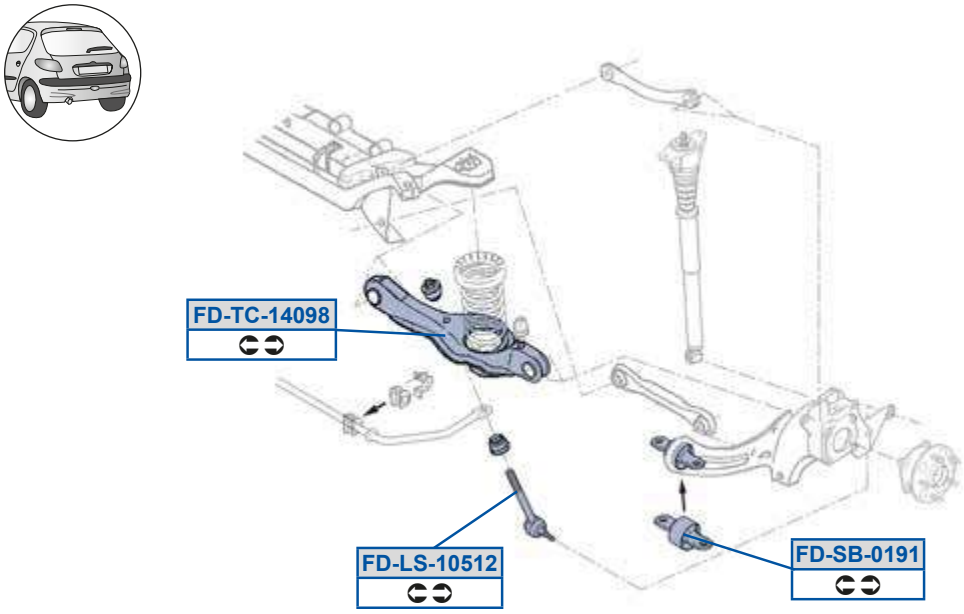
FD-TC-14098
FD-LS-10512
FD-SB-0191

TR5Oi 5AGCE
89C8GAE38C879E7

TR5dP5DF9>
8A7CGD73Aa C8CBFBQO

TR5PX5FAB8
8C797FD /40

TR5dP5FGE9
8C797FB

TR5PX5FAB9
8C797FE /40

TR5eQ59B8GF
8C79E9G3F B8CYDC9OO

TR5Sd5FAAE
8C78FCC38CB8BFF

TR5h a5FGBG
8C797FE38E9AA9B

TR5Sd5FAAF
8C78CFA38C78FCA

TR5h a5FGC8
8C797FD38E9AA9A

TR5Zd598C9>
8C79DF838EFAA97

gg5dP5ADBE
A7E8B89F

TR5Zd5ADDE
899AEG9389A7G7G

TR5dP589G9
87D8DE738A7B89B

T_ cR

Yf UO WW	8A79A	Yf UO WWR[; 1	8979A
Yf UO Wgt	8G79B		

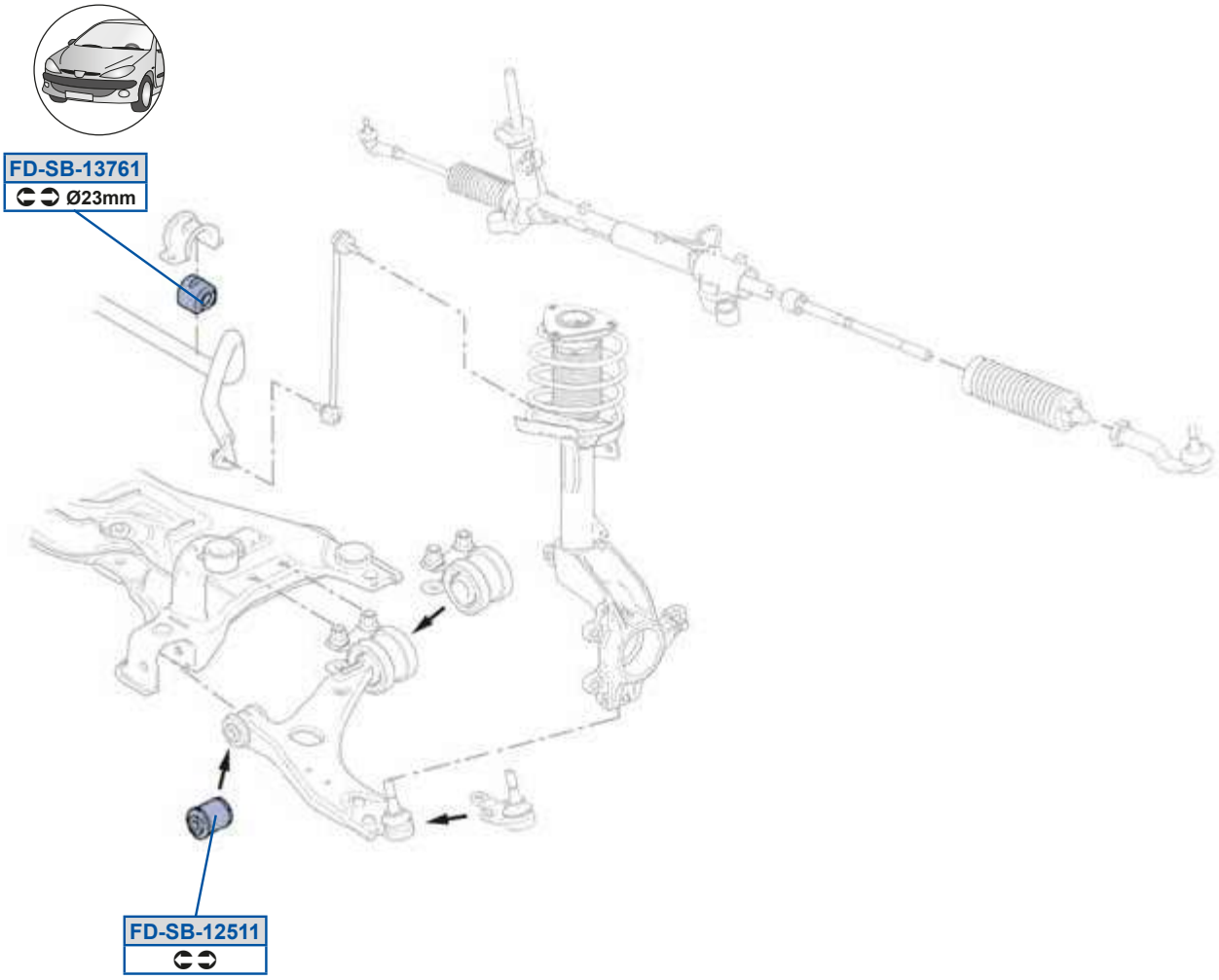

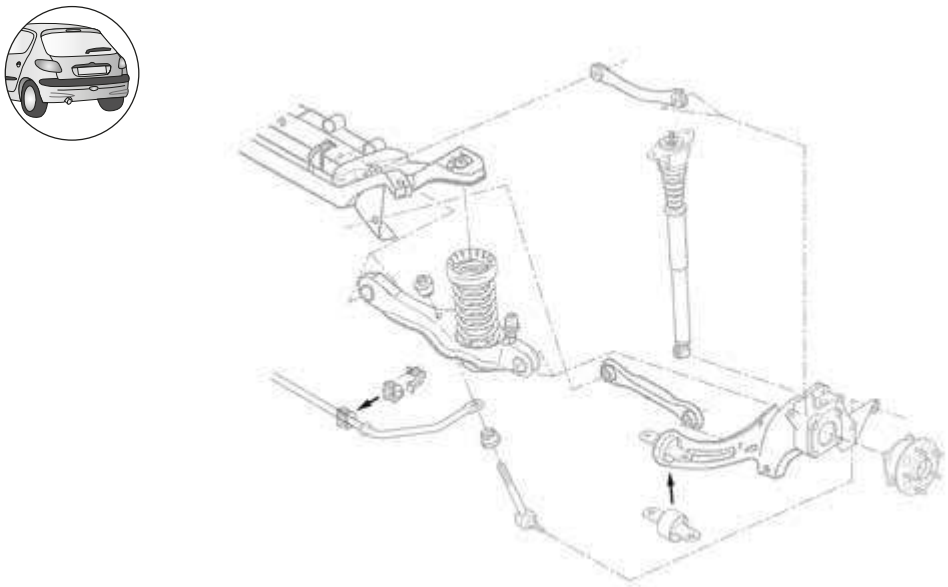

MOOG

TR5dP59>C99

8E7GBCE /40 38E7GBDD /40

TR5dP59AED9

8 DFA BF838 F87 A9D

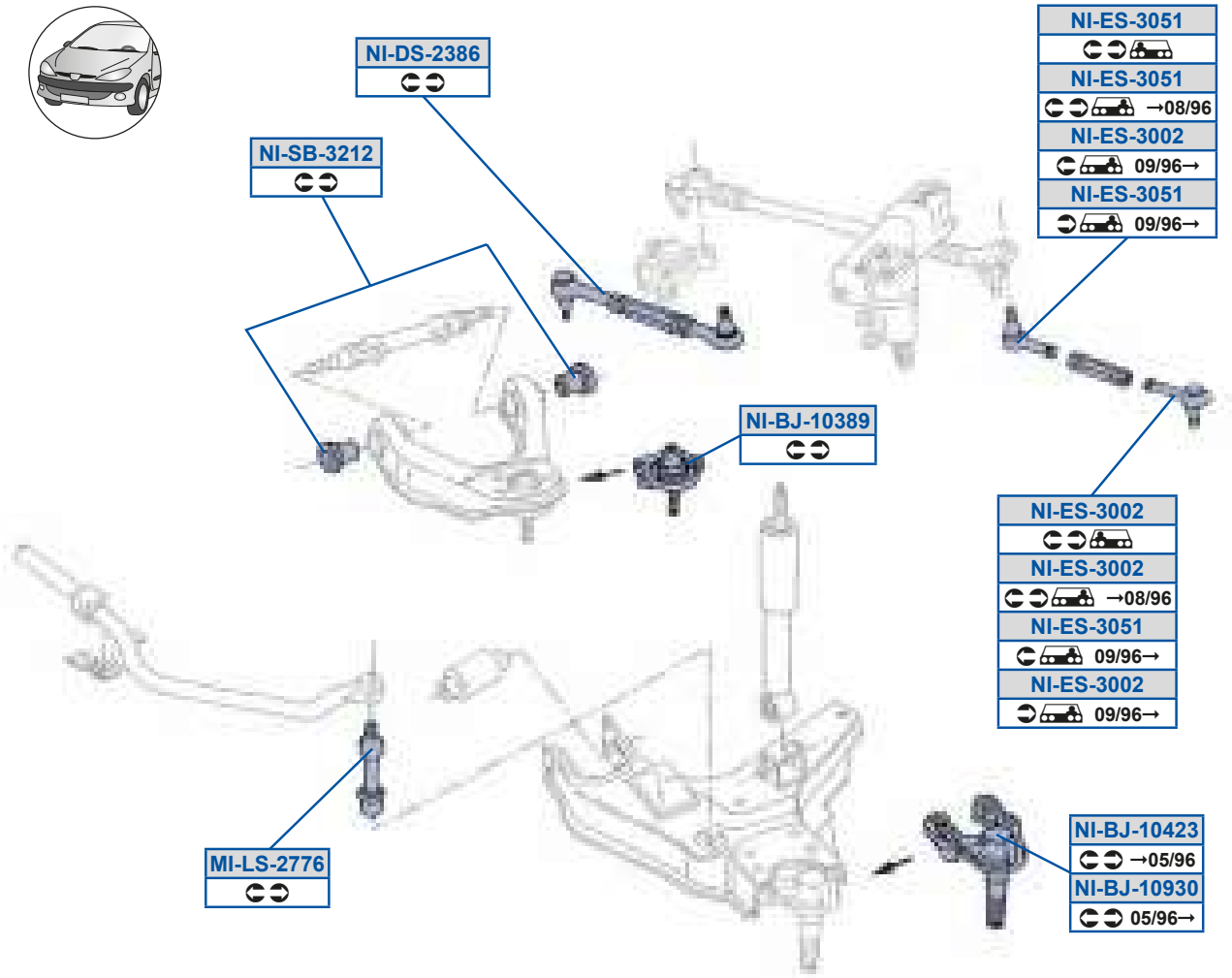
NI-DS-2386
NI-SB-3212
NI-ES-3051
NI-ES-3051 →08/96
NI-ES-3002 09/96→
NI-ES-3051 09/96→
NI-BJ-10389
NI-ES-3002
NI-ES-3002 →08/96
NI-ES-3051 09/96→
NI-ES-3002 09/96→
MI-LS-2776
NI-BJ-10423 →05/96
NI-BJ-10930 05/96→

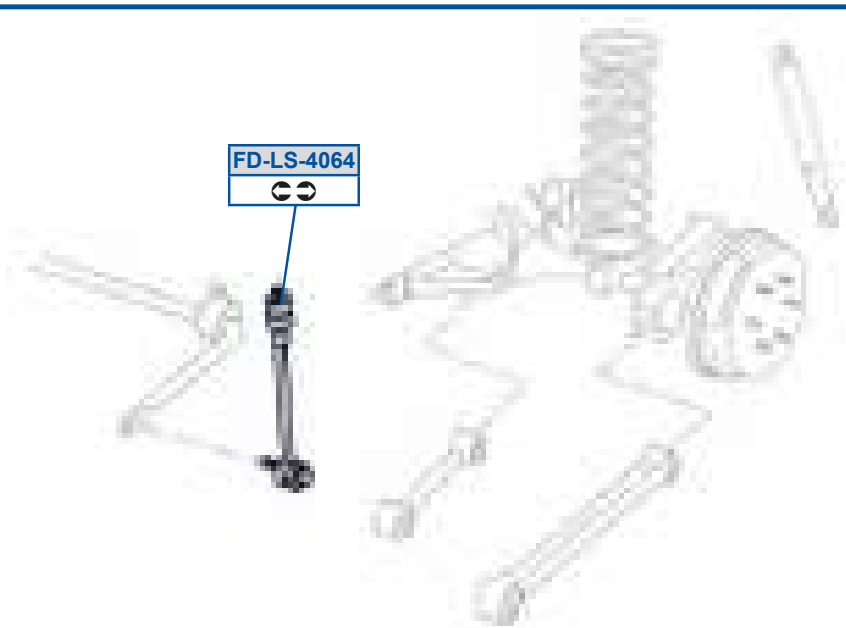
FD-LS-4064

TR5Zd5B8DB
8GCBF983CD9D77T778

[V5Zd5>EED
8GCBEEF

] V5PX598AFG
8GCBBA7

] V5PX598B>A
8GCBBA8

] V5PX598GA8
8GCCAAE38GCGAAE

] V5Rd5>AFD
BFC87A8U9C3BFC87ET777

] V5Sd5A88>
8GD8DDF3BFC97ET777

] V5Sd5A8C9
8GD8DDF38GD8DDG

] V5dP5A>9>
8GCBECE3CBC7DPGC77

[_] RS_ WOUPa1	8; 7GA 8F7GD	[_] RS_ Wdt OUPa1	8; 7GA 8F7GD
[_] RS_ We éx OP] a1	897GA 8F7GD		

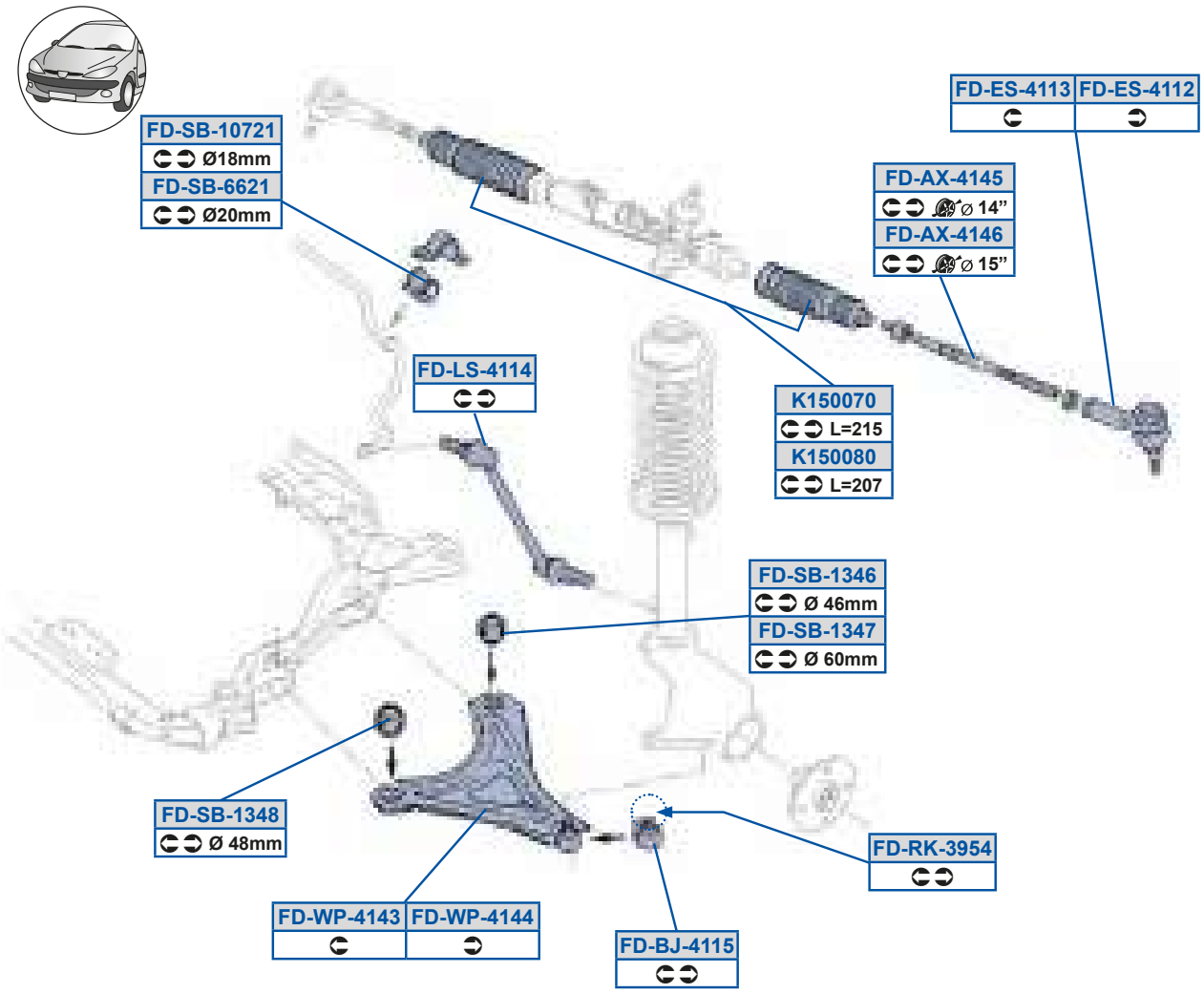

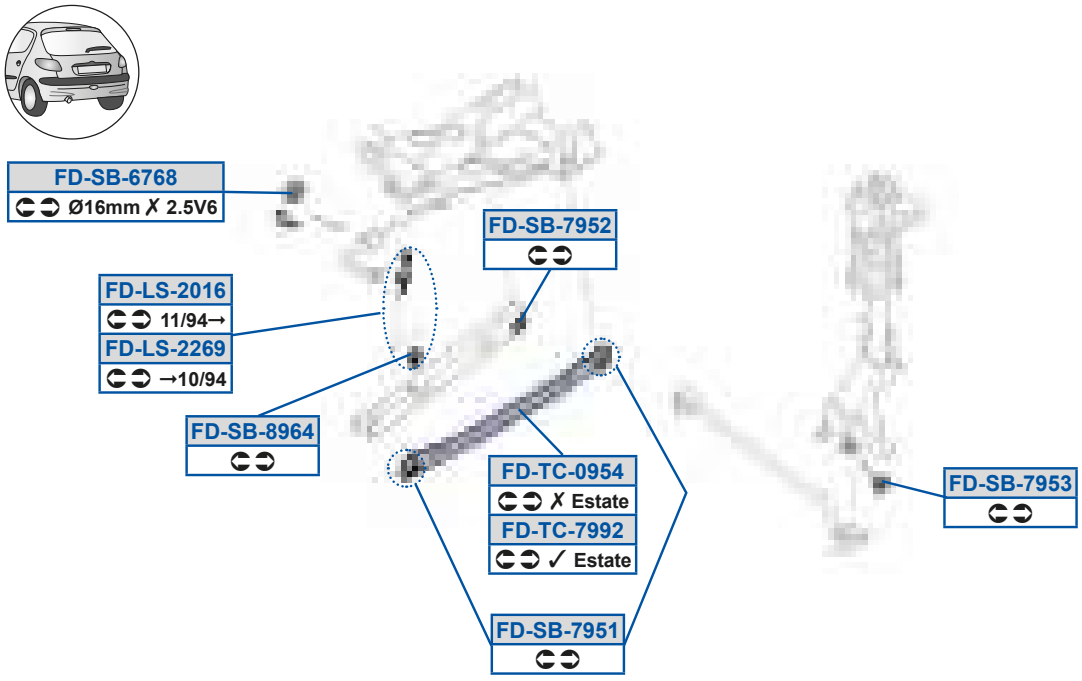

TR5Oi 5B9BC
AG7A8BE3DEAEDG9

TR5Oi 5B9BD
AG7A8BE3DFA97BG

TR5PX5B99C
87A79EE /40387A79EF /40

TR5Sd5B99>
C79EBC93GAP A9E7PO

TR5Sd5B99A
C79EBC83GAP A9E7OO

TR5Zd5>89D
8799ACF387ACG88

TR5Zd5>>DG
E78B987

TR5Zd5B99B
887D9DG3C87DGGC

TR5c Y5AGCB

TR5dP598E>9
E8BB9793GAPPBO7AEOQ

TR5dP59ABD
DFE7CBG3GAPPAO9D9PO

TR5dP59ABE
879A7CF387EB9F9

TR5dP59ABF
87EB9F93DEG788C

TR5dP5DD>9
889FE9C3DE8B8GC

TR5dP5DEDF
E8BB97B3GAPPBO7AESO

TR5dP5EGC9
DF9G7BC

TR5dP5EGC>
DF9G7BD

TR5dP5EGCA
DF9G7C73DG78CAB

TR5dP5FGDB
DG8CB883GAPPCQBGAOQ

TR5eQ58GCB
DFDECEE3GAPPCYDC9OQ

TR5eQ5EGG>
87E9BCA3DE879DC

TR5h a5B9BA
87A79EE387A79EF

TR5h a5B9BB
879A79D387A79EE

Y9C88E8
AG7B8993DEE98EA

Y9C88F8
D87ACG7

T_ cR

[_] RS_ WOPOa1	8G7GD 99788	[_] RS_ Wdt OPTa1	8G7GD 99788
[_] RS_ Wé éx OP] a1	8F7GD 99788		

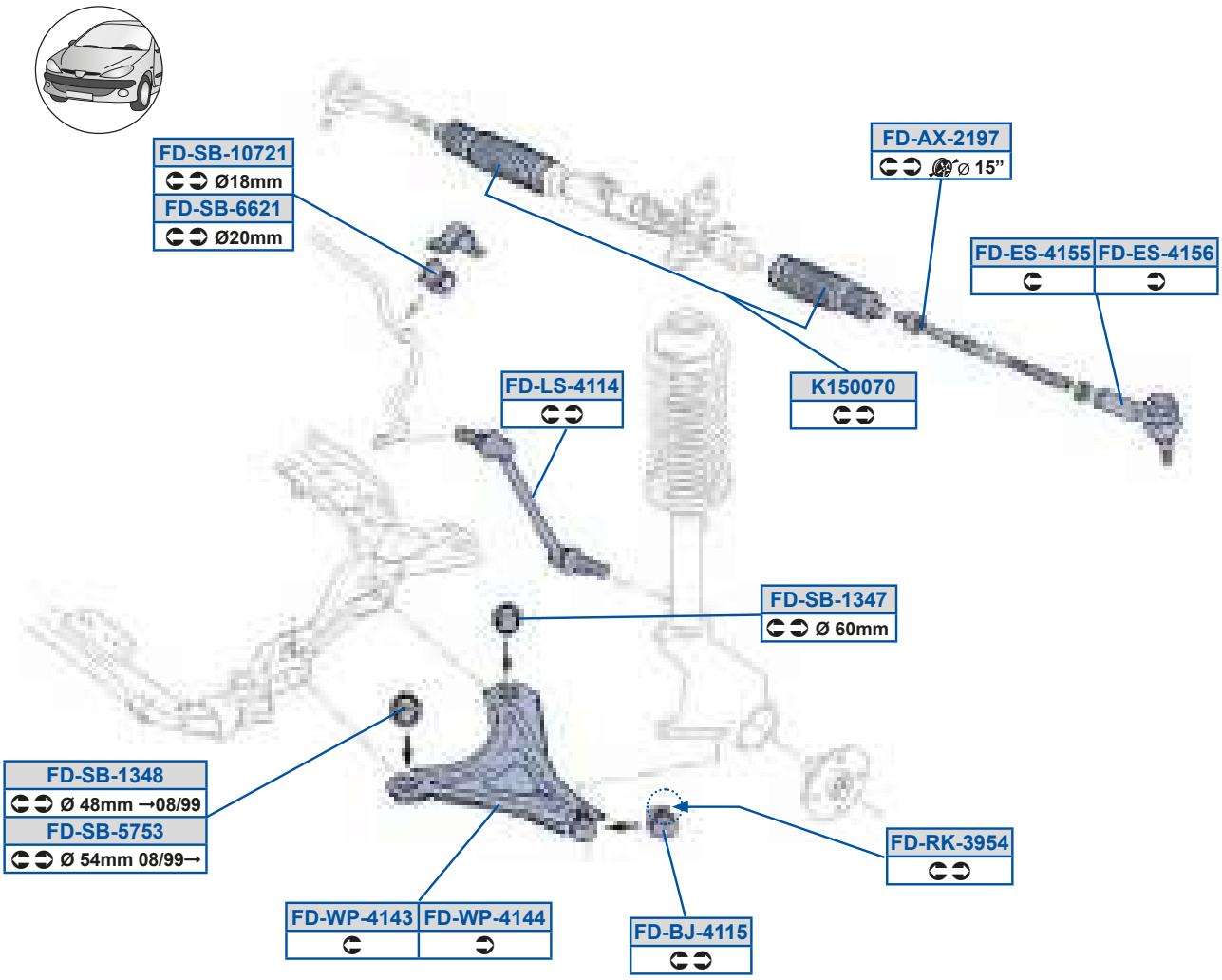

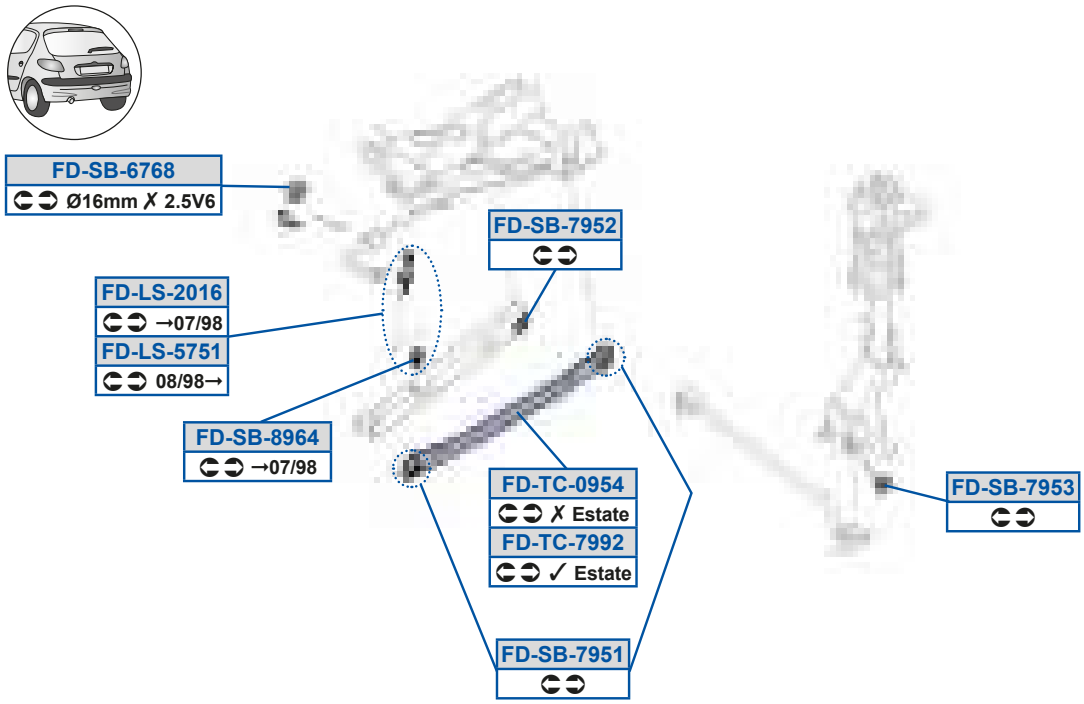

MOOG

TR5Oi 5>9GE
AE799F83AG7A8BF

TR5dP598E>9
E8BB9793GAPPBO7AEOQ

TR5dP5EGCA
DF9G7C73DG78CAB

TR5PX5B99C
87A79EE /40387A79EF /40

TR5dP59ABE
879A7CF387EB9F9

TR5dP5FGDB
DG8CB883GAPPCQBGAOQ

TR5Sd5B9CC
87ACDG8387GEA9A

TR5dP59ABF
87EB9F93DEG788C

TR5eQ53GCB
DFDECEE3GAPPCYDC9OQ

TR5Sd5B9CD
87ACDG7387GEA8D

TR5dP5CECA
8879GC7

TR5eQ5EGG>
87E9BCA3DE879DC

TR5Zd5>89D
8799ACF387ACG88

TR5dP5DD>9
889FE9C3DE8B8GC

TR5h a5B9BA
87A79EE387A79EF

TR5Zd5B99B
887D9DG3C87DGGC

TR5dP5DEDF
E8BB97B3GAPPBO7AESO

TR5h a5B9BB
879A79D387A79EE

TR5Zd5CEC9
879A8BG3879A9CD

TR5dP5EGC9
DF9G7BC

Y9C88E8
AG7B8993DEE98EA

TR5cY5AGCB

TR5dP5EGC>
DF9G7BD

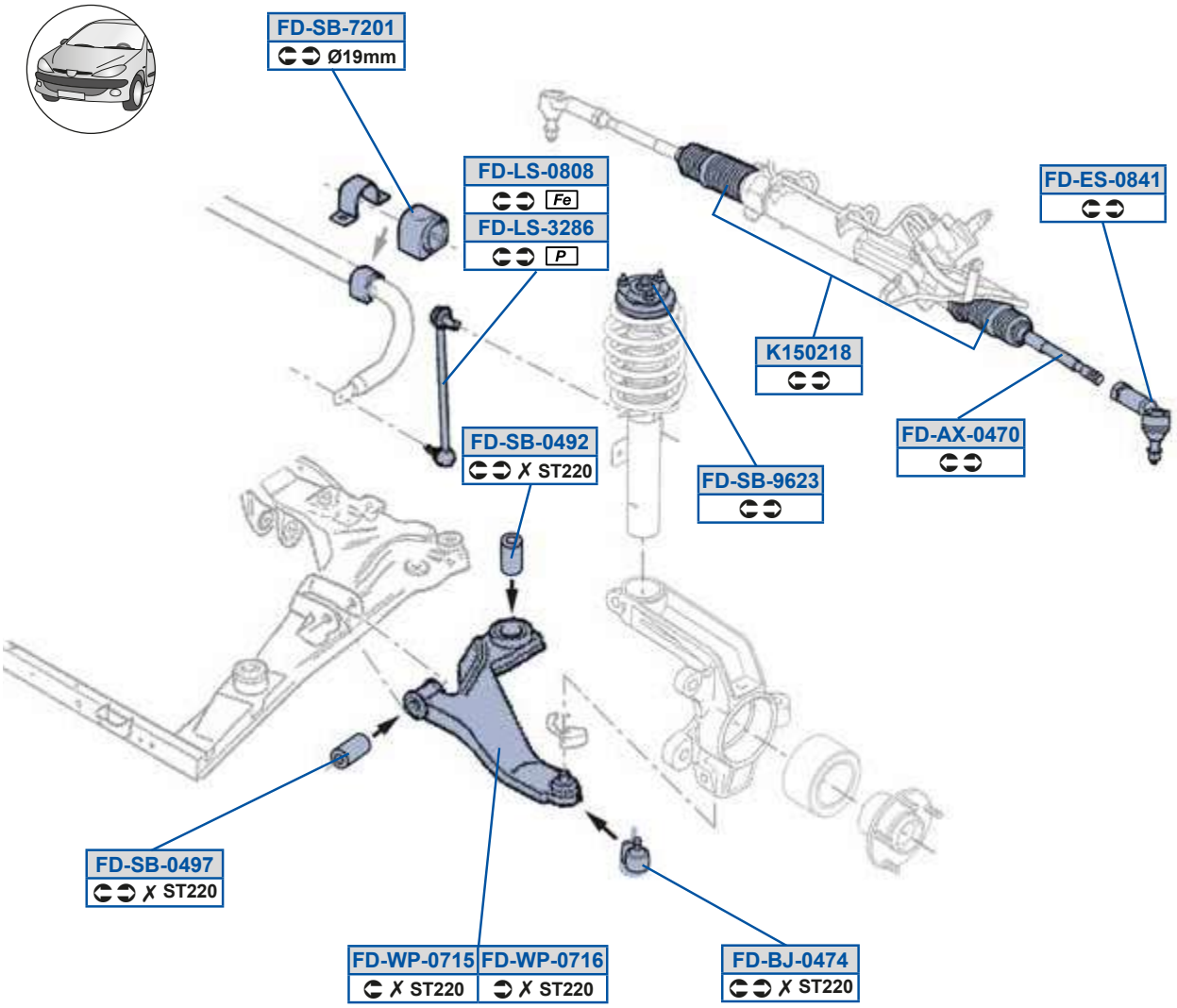
FD-SB-7201
Ø19mm
FD-LS-0808
Fe
FD-LS-3286
P
FD-ES-0841
K150218
FD-AX-0470
FD-SB-0492
✗ ST220
FD-SB-9623
FD-SB-0497
✗ ST220
FD-WP-0715
✗ ST220
FD-WP-0716
✗ ST220
FD-BJ-0474
✗ ST220

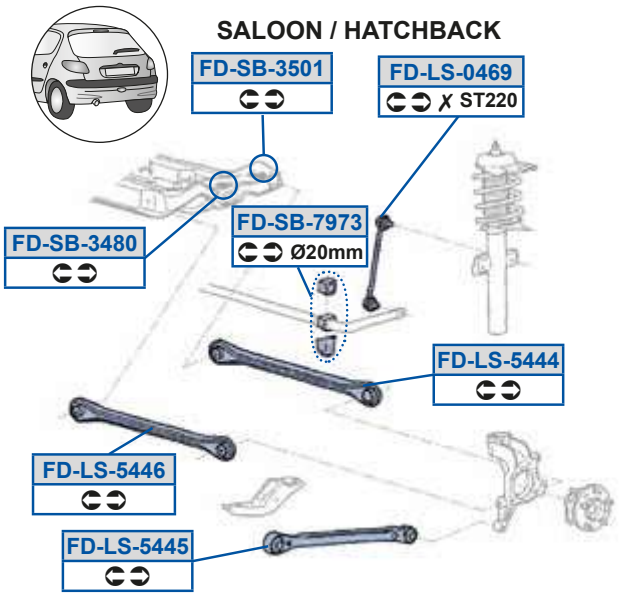
SALOON / HATCHBACK
FD-SB-3501
FD-LS-0469
✗ ST220
FD-SB-3480
FD-SB-7973
Ø20mm
FD-LS-5444
FD-LS-5446
FD-LS-5445

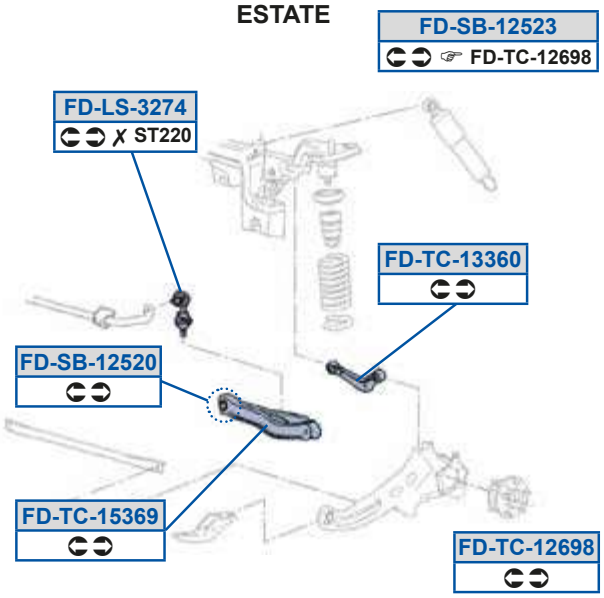
ESTATE
FD-SB-12523
FD-TC-12698
FD-LS-3274
✗ ST220
FD-TC-13360
FD-SB-12520
FD-TC-15369
FD-TC-12698

TR5Oi 58BE8
8oEQA9F7PP3B7GEBFB

TR5Zd5CBBC
897DBEB38oE8CYFGFOT

TR5dP5E>89
888DD793888FDGC

Y9C8>9F
8oEQAYDD8OP3B88G8GA

TR5PX58BEB
897AG9A /4C3897AG9B /4O

TR5Zd5CBBD
888EFCG3888FG98

TR5dP5EGEA
889BB8F38oE8BO7AERQ

TR5Sd58FB9
88AFA8A388AFA8B

TR5dP58BG>
8A88B8D38A88B8Do9

TR5dP5GD>A
BAFDB9D

TR5Zd58BDG
888EF773889EDBF

TR5dP58BGE
8A88B8D38A88B8Do8

TR5eQ59>DGF
899777C38A97D8G

TR5Zd58F8F
888EDGF3889EDBD

TR5dP59>C>8
898B9G7 /4O

TR5eQ59AAD8
888DD7F38A9CA9D

TR5Zd5A>EB
888EF78388A7BC9

TR5dP59>C>A
899777C /4C88A9CA9D

TR5eQ59CADG
8899CDD3898B9G7

TR5Zd5A>FD
888EDGF3898GDGE

TR5dP5ABF8
8B7BGED

TR5h a58E9C
888DCEG388AGG9F

TR5Zd5CBBB
888FG9738oE8CYDC9OQ

TR5dP5AC89
8B7BGEE

TR5h a58E9D
888DCEF3889FBFA

T_ cR

[_] RS_ Wy	8A78E 8979C	[_] RS_ Wy dt	8A78E 8979C
[_] RS_ Wy e éx	8A78E 8979C		

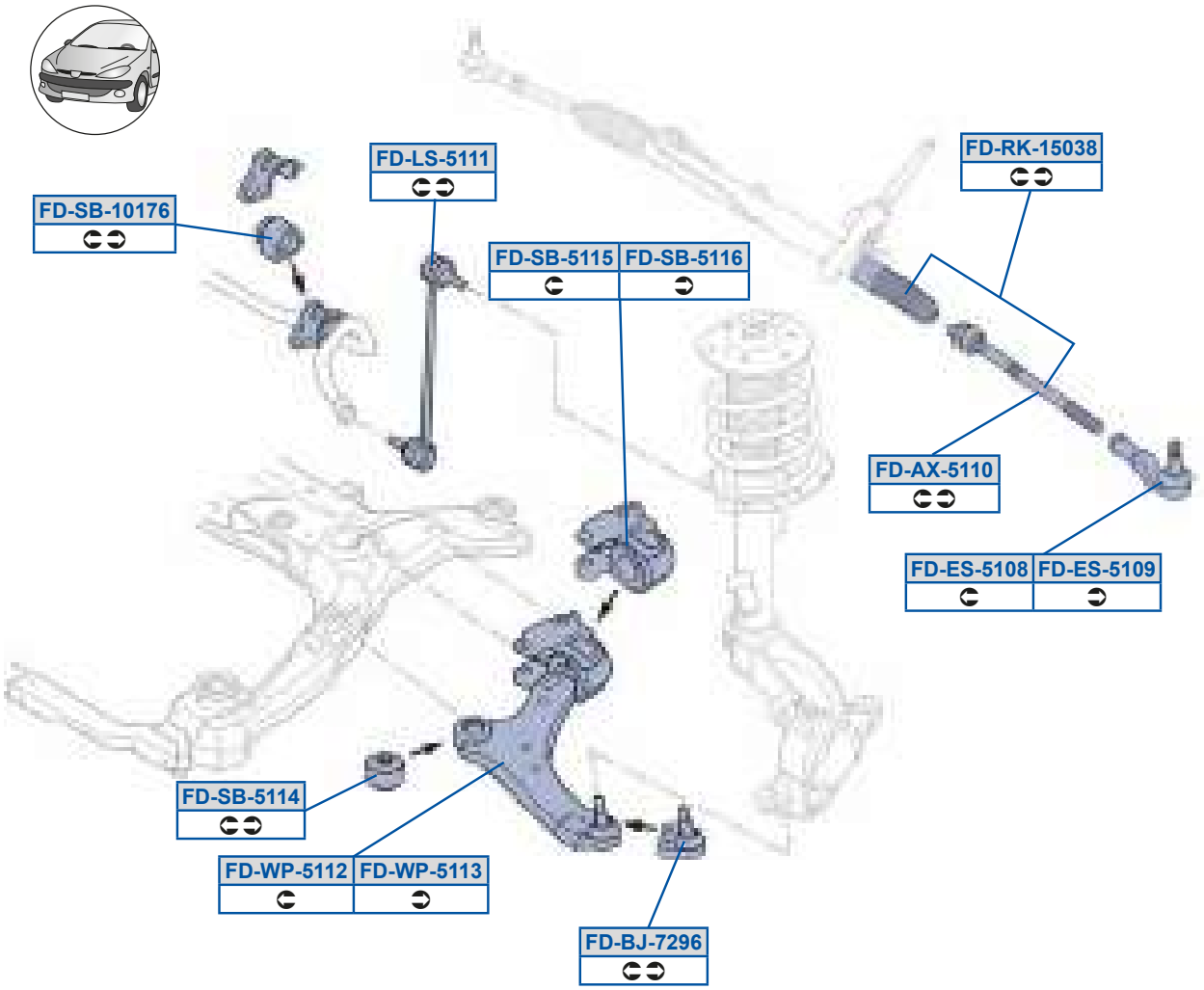

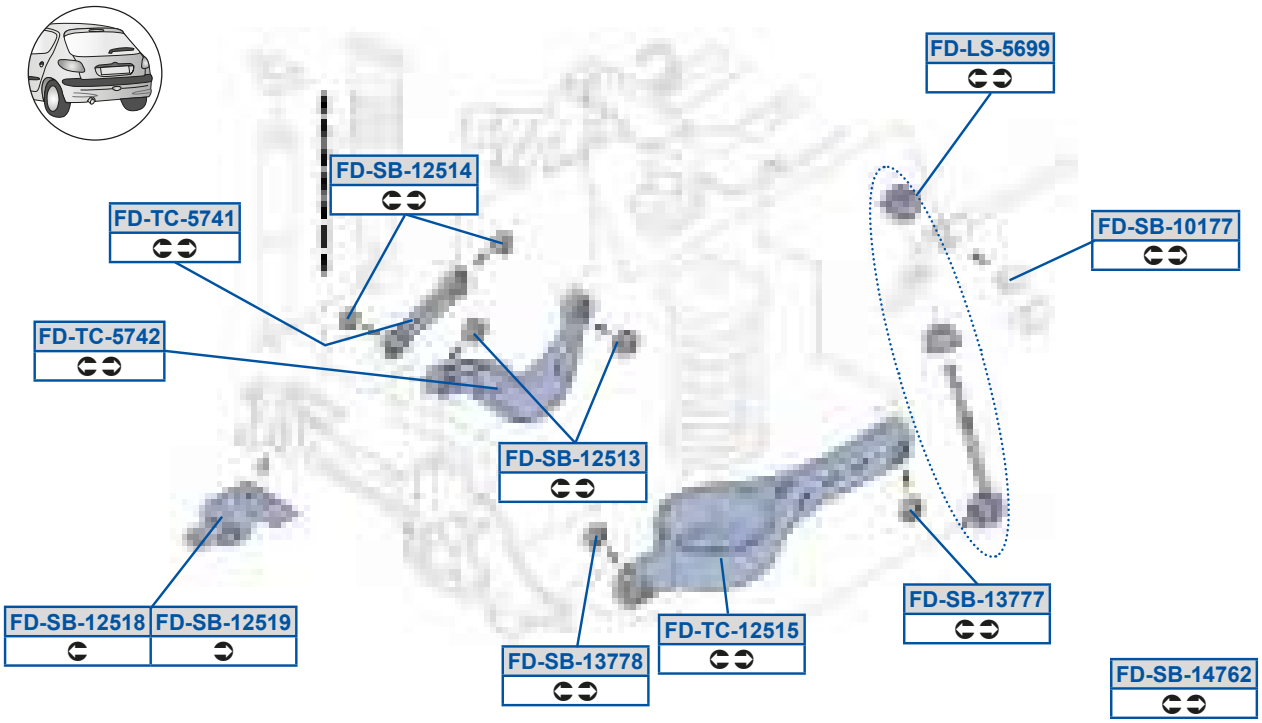

MOOG

TR5Oi 5C998
8BAA9E838CGDCEB

TR5dP5989EE
8AFED9B38B7CC9A

TR5dP5C99B
8BDD8FD /4C38BDD8FF /40

TR5PX5E>GD
8BDD8FD /4C38BDD8FF /40

TR5dP59>C9A
8BCED7G /40

TR5dP5C99C
8BDD8FD /4C38BDD8FF /40

TR5Sd5C98F
8BAA9EB3DUG8A9G7OO

TR5dP59>C9B
8B9DEE7 /40

TR5dP5C99D
8BDD8FD /4C38BDD8FF /40

TR5Sd5C98G
8BAA9EA3DUG8A9FGOO

TR5dP59>C9F
8CDDFAE38CDDFAF

TR5eQ59>C9C
8AEEBBE38AF8BB9

TR5Zd5C999
8AEEFBG38BAA9GB

TR5dP59>C9G
8CAAFAD38CDDF87

TR5eQ5CEB9
8AEEBBG38AF8BBA

TR5Zd5CDGG
8AEEB8D38B9CFCA

TR5dP59AEEE
8AEEBBE /4C38AF8BB9 /40

TR5eQ5CEB>
8BCED7G

TR5cY59C8AF
8BAA9E838CGDCEB

TR5dP59AEEF
8AEEBBE /4C38AF8BB9 /40

TR5ha5C99>
8AEEFBF38AFCCGB

TR5dP5989ED
8BEFCF9

TR5dP59BED>
8BAE8G93A7ED7G98

TR5ha5C99A
8BCFEEA38BDD8FD

T_ cR

[_] RS_ g Vt vÉut v	8G79B	[_] RS_ g dt	8G79;
[_] RS_ g e éx	8G79B		

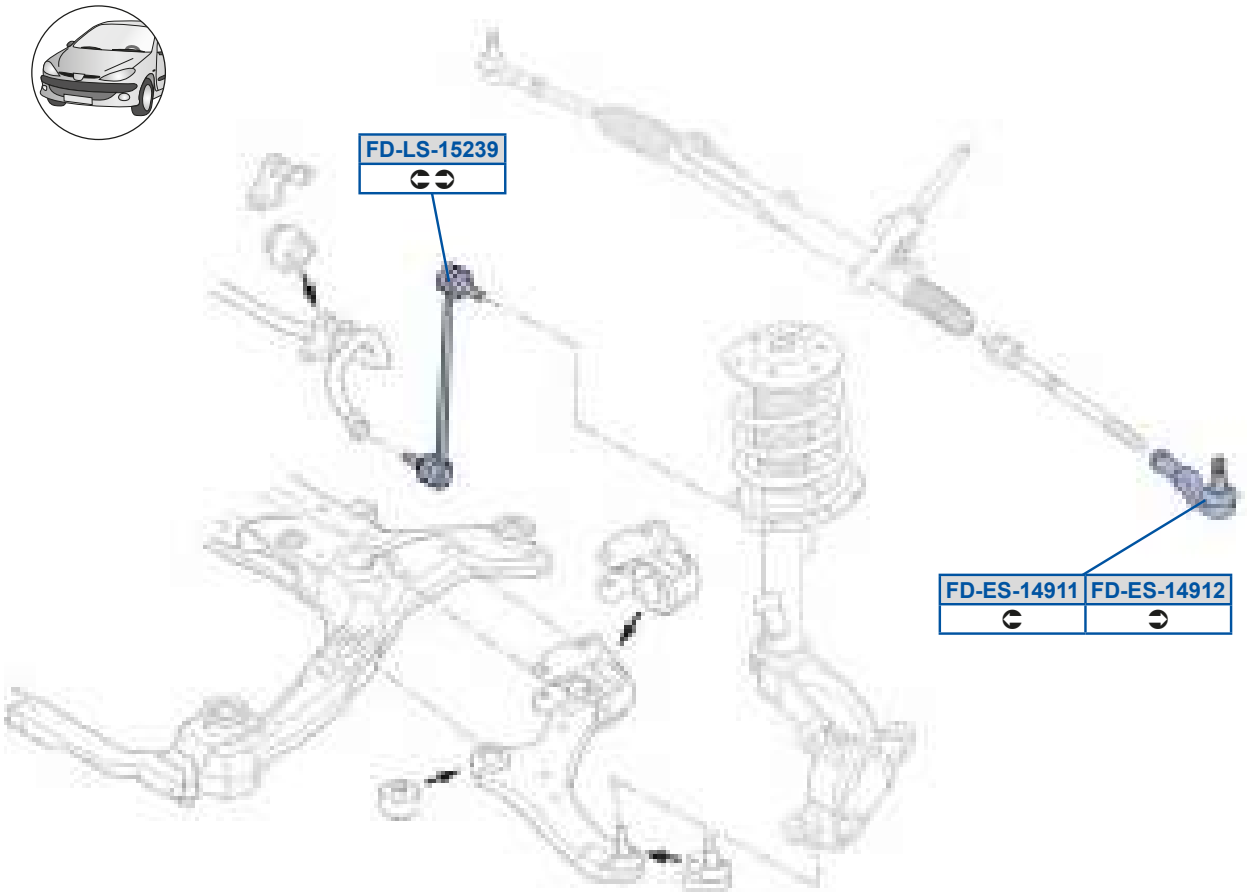

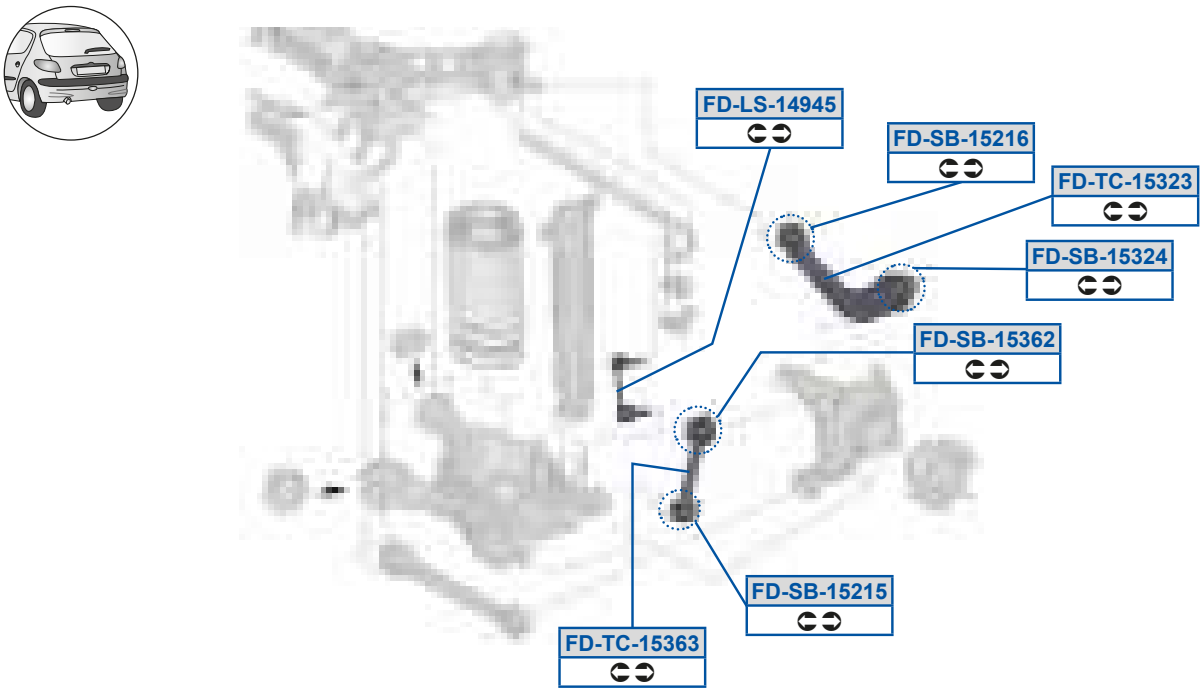

TR5Sd59BG99
8F79GEE3RUGQA9G7QO

TR5Sd59BG9>
8F79GEB3RUGQA9FGQO

TR5Zd59BGBC
C8F9F8F3RUGQCQBFDO Q

TR5Zd59C>AG
C8F9EF7

TR5dP59C>9C
C9FFA8E /40

TR5dP59C>9D
8F78BBD /40

TR5dP59CA>B
8F78BBD /40

TR5dP59CAD>
C9FFA8E /40

TR5eQ59CADA
C9FFA8E3RUGQCOGE9O R

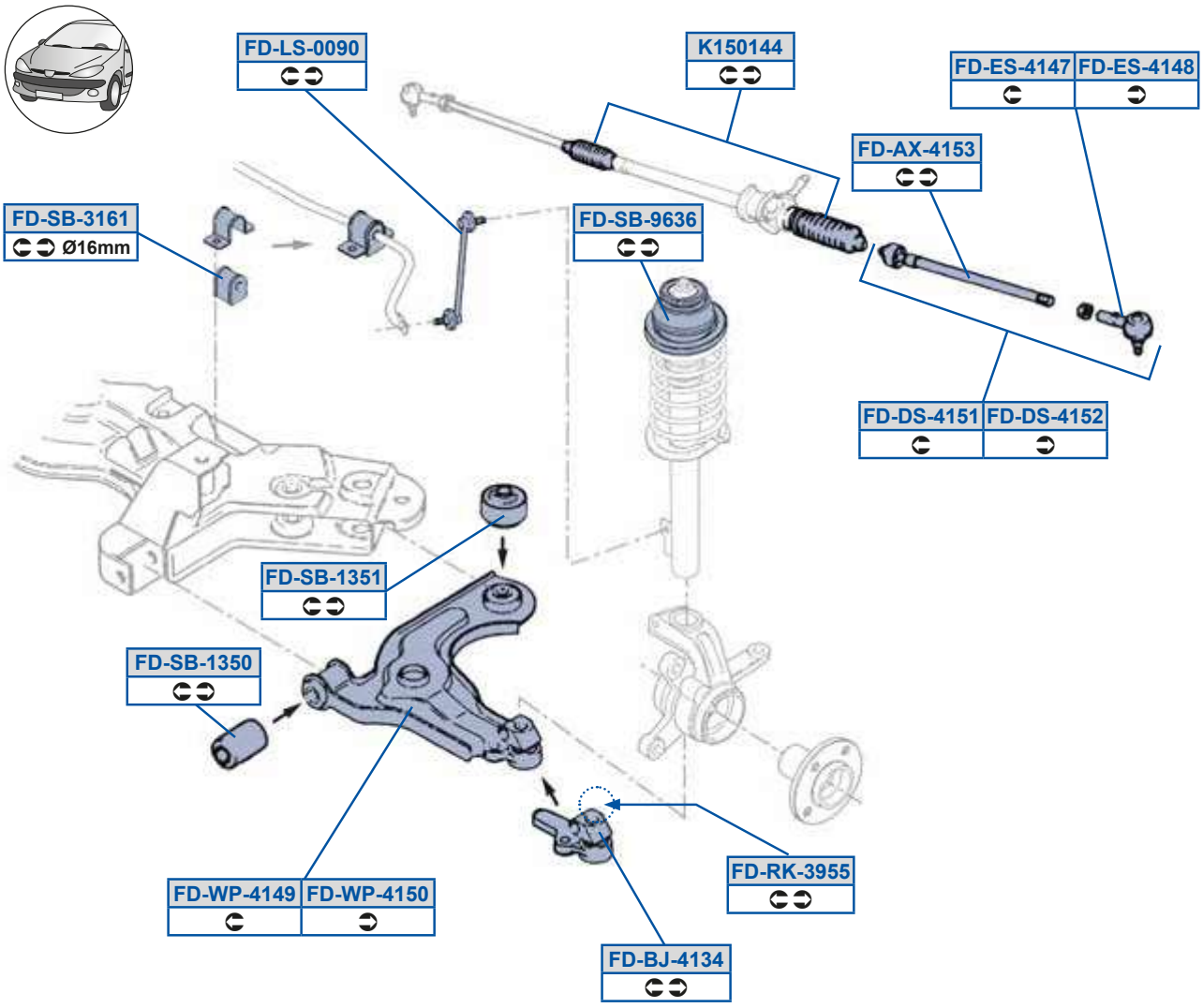
FD-LS-0090
K150144
FD-ES-4147
FD-ES-4148
FD-AX-4153
FD-SB-3161
Ø16mm
FD-SB-9636
FD-DS-4151
FD-DS-4152
FD-SB-1351
FD-SB-1350
FD-WP-4149
FD-WP-4150
FD-RK-3955
FD-BJ-4134

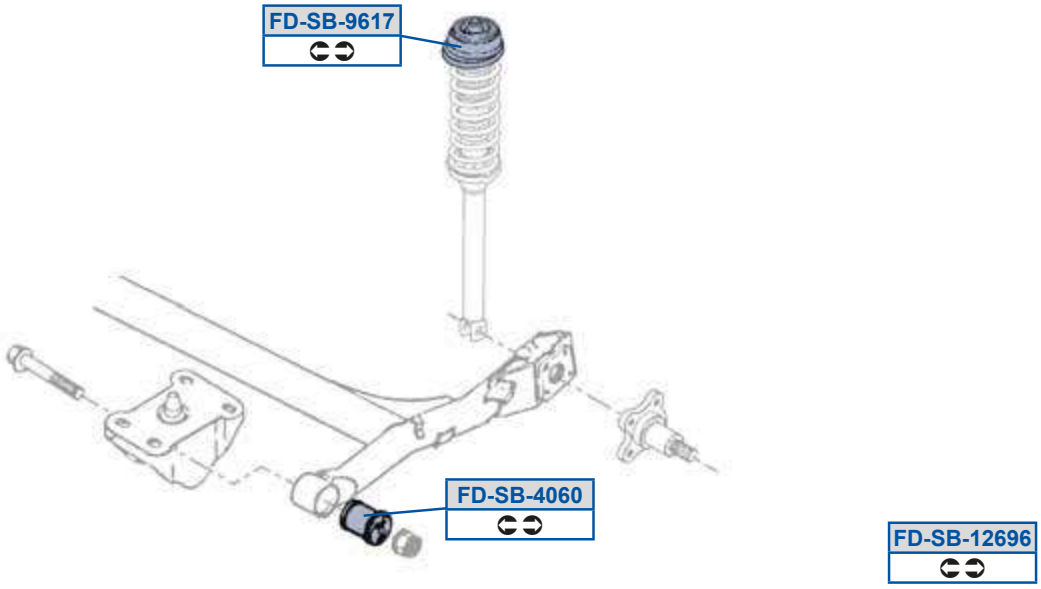
FD-SB-9617
FD-SB-4060
FD-SB-12696

TR5Oi 5B9CA
87978EB /40387978EC /40

TR5dP59>DGD
87BDBAA

TR5h a5B9C8
878C9D73878C9DB

TR5PX5B9AB
87A779C387BEEGE

TR5dP59AC8
87877AE387CC8G8

Y9C89BB
8789F8B38S78A989C

TR5Rd5B9C9
8788FCF38788FCF2878BB7

TR5dP59AC9
877B7883878BDCB

TR5Rd5B9C>
8788FCE38788FCE287BB78

TR5dP5A9D9
88BC9E93D8FCF7G

TR5Sd5B9BE
8788FCF387978EC

TR5dP5B8D8
878DBAG3GDTPCYDCAQO

TR5Sd5B9BF
8788FCE387978EB

TR5dP5GD9E
879ACFE

TR5Zd588G8
877B78F387D8DA8

TR5dP5GDAD
87AG778

TR5cY5AGCC

TR5h a5B9BG
877GCGD3878C9DB

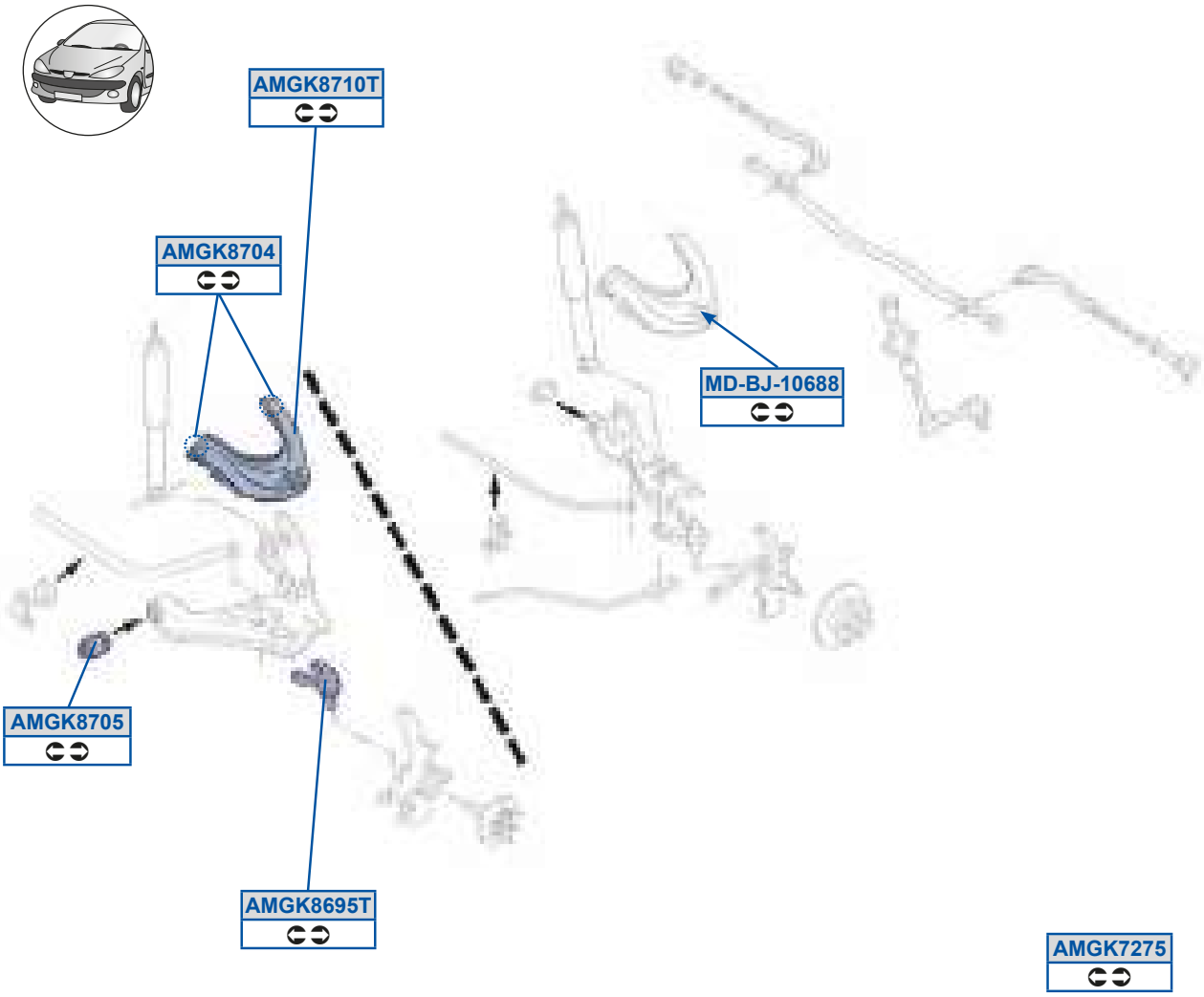
AMGK8710T
AMGK8704
MD-BJ-10688
AMGK8705
AMGK8695T
AMGK7275

O[UYE>EC
88C8D7EF39Z9 CYBFAP0

O[UYFDGCe
TCE A7C7PP3TCt A7EF0

O[UYFE8B
TCE0A08FF00

O[UYFE8C
TCE0A7DGQP

O[UYFE98e
TCt A7F90

[R5PX598DFF
ADDCEA9

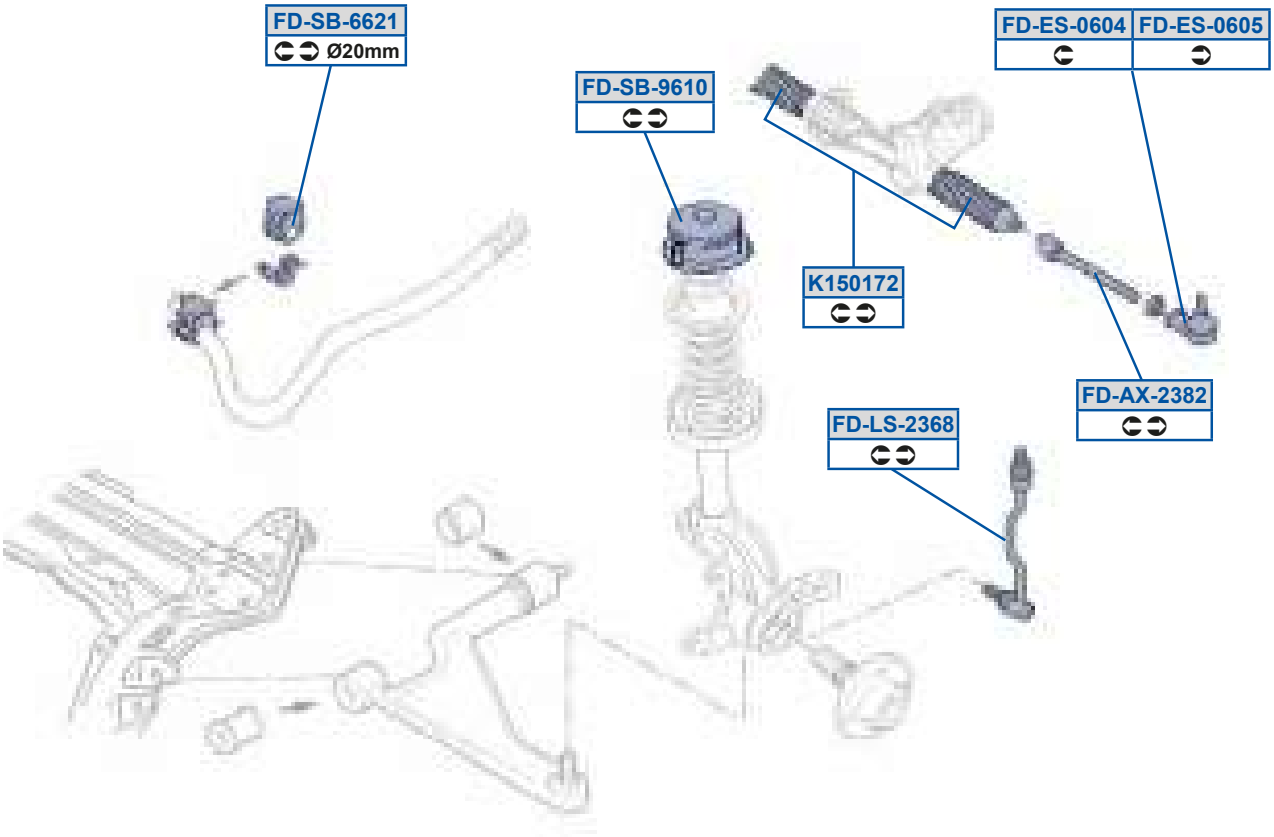
FD-SB-6621
Ø20mm
FD-SB-9610
FD-ES-0604
FD-ES-0605
K150172
FD-AX-2382
FD-LS-2368

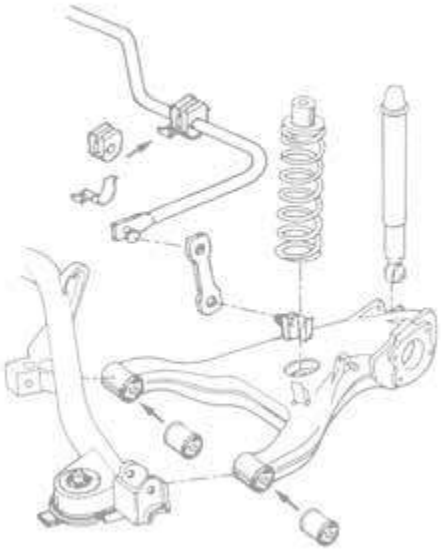

TR5Oi 5>AF>
879GFAD3E9G9GD7

TR5Sd58D8B
C7A79983C7A7999

TR5Sd58D8C
C7A79983C7A7999

TR5Zd5>ADF
87BCB8A388BBB9B

TR5dP5DD>9
889FE9C3DE8B8GC

TR5dP5GD98
D89EGA9

Y9C89E>
8788DDC3DECF7G7

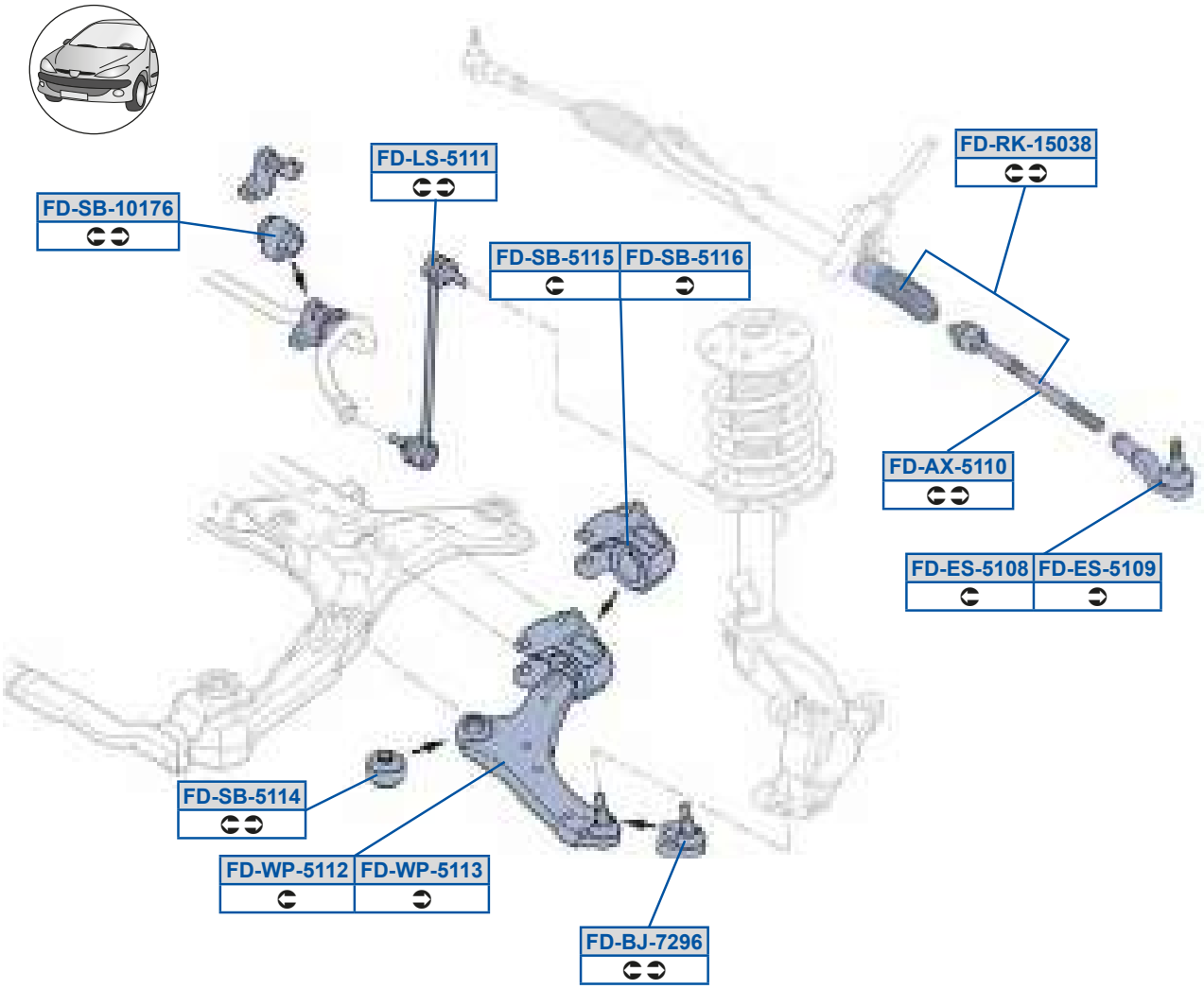
FD-SB-10176
FD-LS-5111
FD-SB-5115
FD-SB-5116
FD-RK-15038
FD-AX-5110
FD-ES-5108
FD-ES-5109
FD-SB-5114
FD-WP-5112
FD-WP-5113
FD-BJ-7296

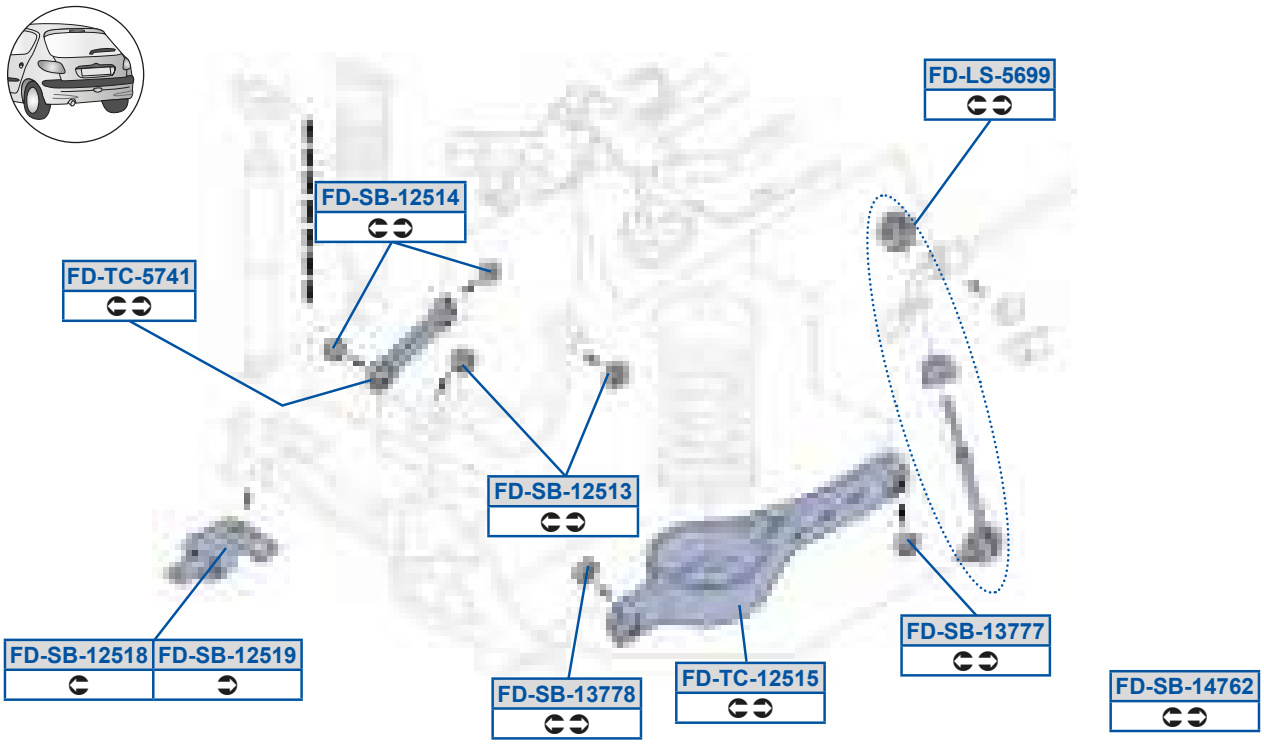
FD-LS-5699
FD-SB-12514
FD-TC-5741
FD-SB-12513
FD-SB-12518
FD-SB-12519
FD-SB-13778
FD-TC-12515
FD-SB-13777
FD-SB-14762

TR5Oi 5C998
8BAA9E838CGDCEB

TR5dP59>C9A
8BCED7G /40

TR5dP5C99C
8BDD8FD /4C38BDD8FF /40

TR5PX5E>GD
8BDD8FD /4C38BDD8FF /40

TR5dP59>C9B
8B9DEE7 /40

TR5dP5C99D
8BDD8FD /4C38BDD8FF /40

TR5Sd5C98F
8BAA9EB3DUG8A9G7OO

TR5dP59>C9F
8CDDFAE38CDDFAF

TR5eQ59>C9C
8AEEBBE38AF8BB9

TR5Sd5C98G
8BAA9EA3DUG8A9FGOO

TR5dP59>C9G
8CAAFAD38CDDF87

TR5eQ5CEB9
8AEEBBG38AF8BBA

TR5Zd5C999
8AEEFBG38BAA9GB

TR5dP59AEEE
8AEEBBE /4C38AF8BB9 /40

TR5h a5C99>
8AEEFBF38AFCCGB

TR5Zd5CDGG
8AEEB8D38B9CFCA

TR5dP59AEEF
8AEEBBE /4C38AF8BB9 /40

TR5h a5C99A
8BCFEEA38BDD8FD

TR5c Y59C8AF
8BAA9E838CGDCEB

TR5dP59BED>
8BAE8G93A7ED7G98

TR5dP5989ED
8BEFCF9

TR5dP5C99B
8BDD8FD /4C38BDD8FF /40

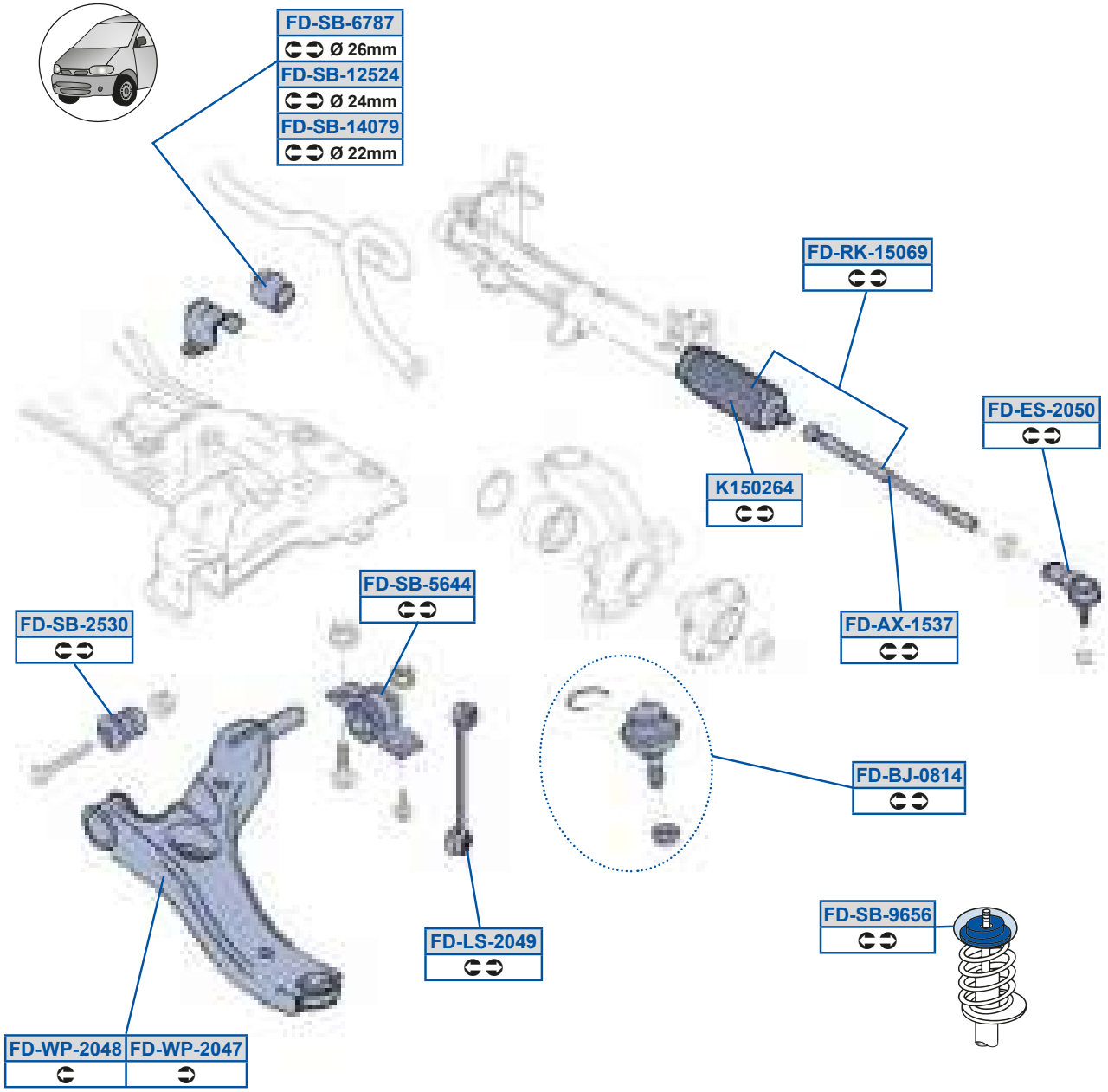
FD-SB-6787
Ø 26mm
FD-SB-12524
Ø 24mm
FD-SB-14079
Ø 22mm
FD-RK-15069
FD-ES-2050
K150264
FD-AX-1537
FD-SB-5644
FD-SB-2530
FD-BJ-0814
FD-SB-9656
FD-LS-2049
FD-WP-2048
FD-WP-2047

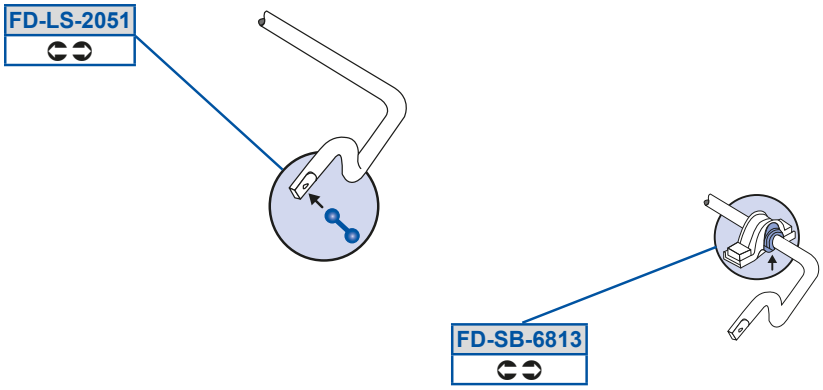
FD-LS-2051
FD-SB-6813

TR5Oi 59CAE
87FCC973AE7EAAA

TR5dP5>CA8
BADDGED

TR5PX58F9B
8B8EAC938BC8G8B

TR5dP5CDBB
BADDGEA /4QBADDGEB /4O

TR5Sd5>8C8
9t 8BA9FGOO3BAF8FB7

TR5dP5DEFE
9t 8BCBFBPQ39t 8BCBFBPR

TR5Zd5>8BG
8AA9BCA39t 8BAPBAFPO

TR5dP5DF9A
9t 8BBO7AEOP39t 8BBO7AEOQ

TR5Zd5>8C9
8AA9BDA39t 8BCQBFDOS

TR5dP5GDCD
8oE 8F8GFO3Et 8 AO8GEO

TR5cY59C8DG
87FCC973AE7EAAA

TR5h a5>8BE
8AA9BCB38ACC7BF

TR5dP59>C>B
9t 8BBO7AERQ3BADE7CF

TR5h a5>8BF
8AA9BCC38ACC7C7

TR5dP59B8EG
BCFA9FD3BGDBGEC

Y9C8>DB
9t 8BAYDD8OO3BAF8FB8

ec0] dW Q_f cWc P	8; 79B	ec0] dW Q_f cWc Y ué	8; 79B

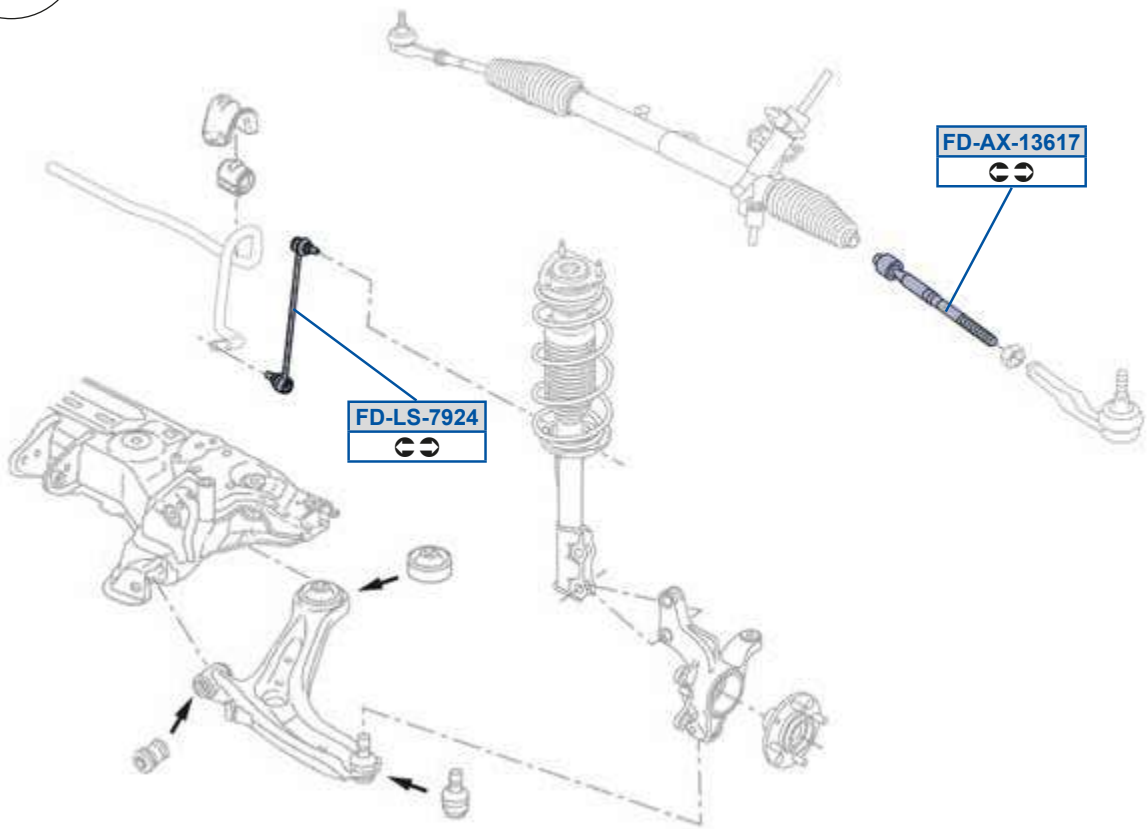

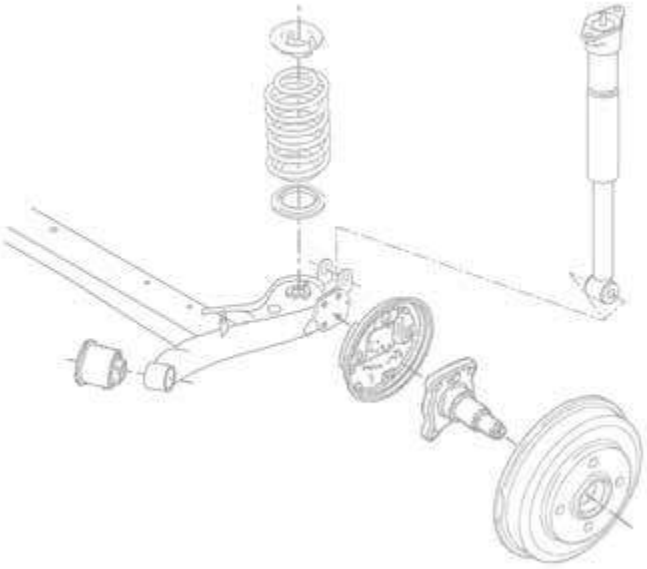

TR5Oi 59AD9E

8EDAGG83PY98AZC8GOO

TR5Zd5EG>B

8BGCDFC38EDAE8B

T_ cR

e_f c] S_ Qf de_[P	9; 79;	ec0] dW Qf de_[P	9; 79;
ec0] dW Qf de_[P	9; 79;		

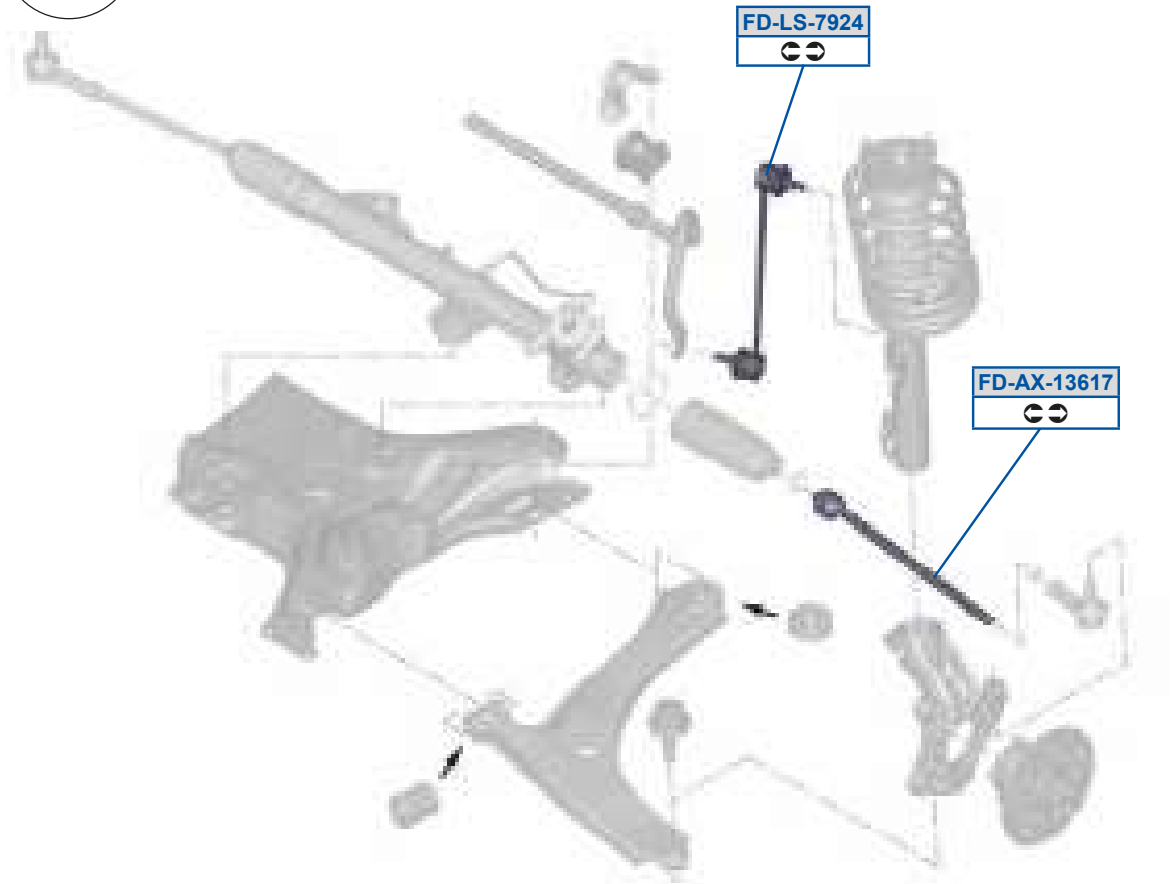

Standard

Pneumatic

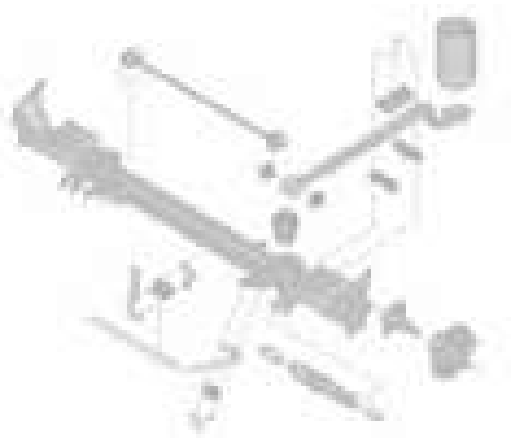

TR5Oi 59AD9E

8EDAGG83PY98AZC8GOO

TR5Zd5EG>B

8BGCDFC38EDAE8B

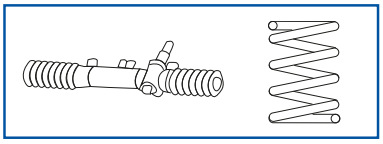

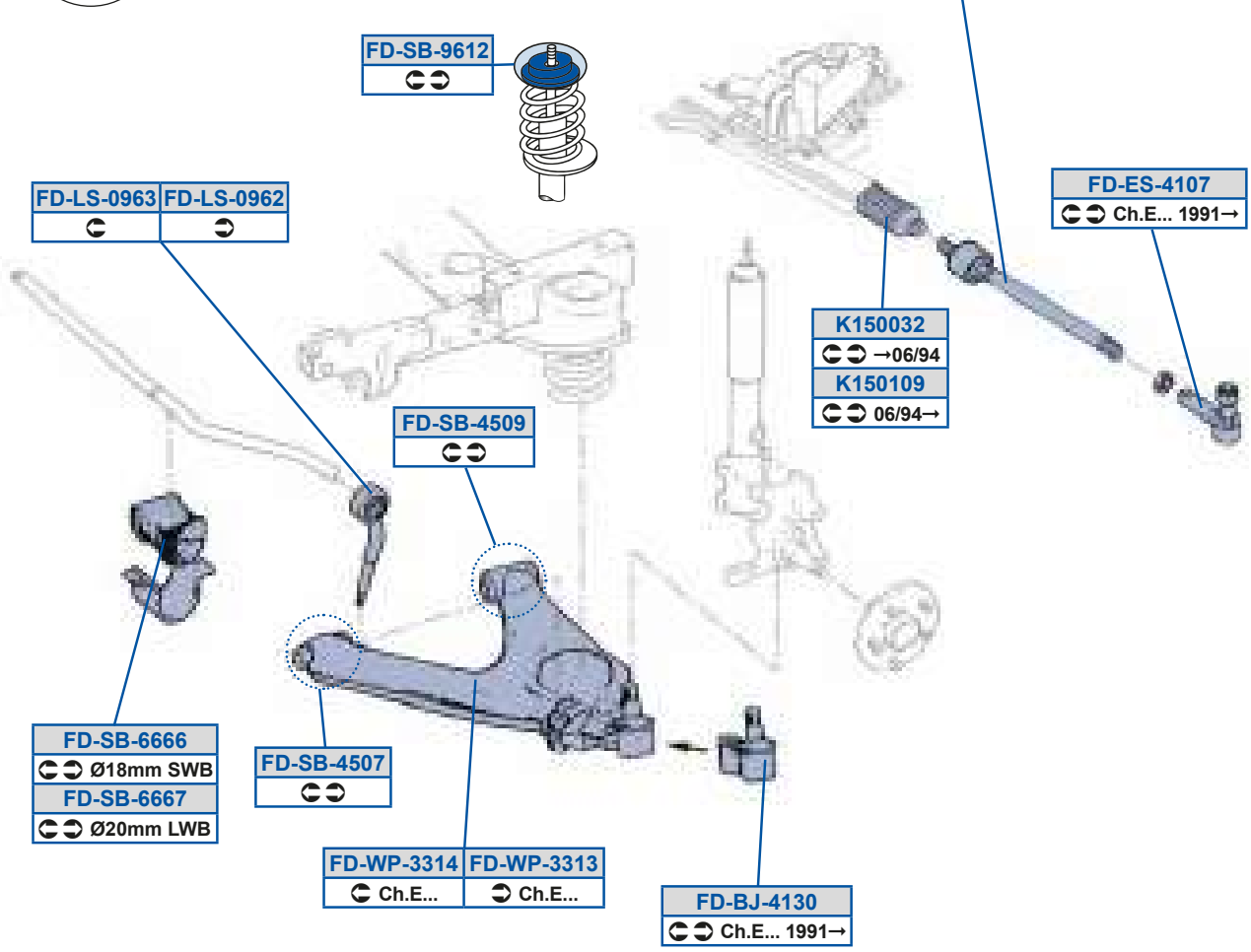
FD-AX-3388
FD-SB-9612
FD-LS-0963
FD-LS-0962
FD-ES-4107
Ch.E... 1991→
K150032
→06/94
K150109
06/94→
FD-SB-4509
FD-SB-6666
Ø18mm SWB
FD-SB-6667
Ø20mm LWB
FD-SB-4507
FD-WP-3314
Ch.E...
FD-WP-3313
Ch.E...
FD-BJ-4130
Ch.E... 1991→

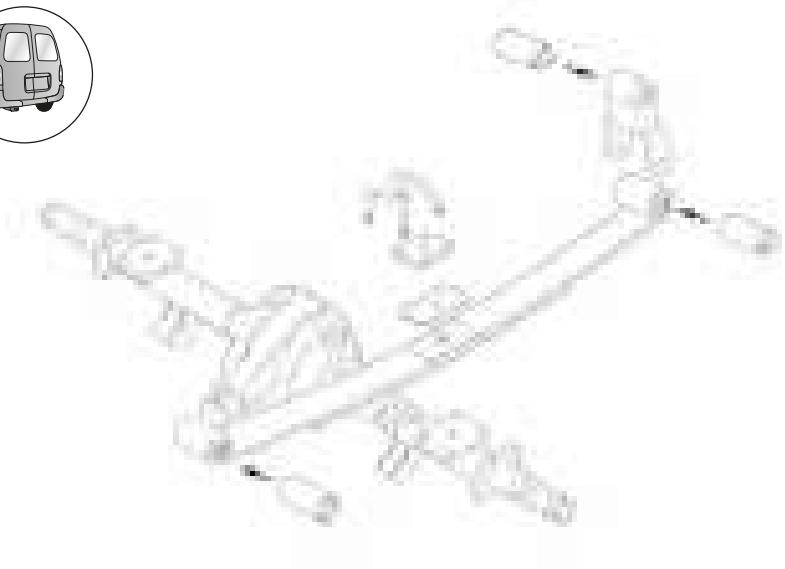

TR5Oi 5AAFF
D8CDBDA3D8GEB79

TR5dP5DDDE
DC98F893G9 PCBFBPO

TR5PX5B9A8
87CC8GB3C79CDED

TR5dP5GD9>
G9 PAY8CCOR

TR5Sd5B98E
87AG87A387BE8BC

TR5h a5AA9A
DD7FFA73G9 PAO7C9OQ

TR5Zd58GD>
D8C7GE73FD PAPBAFOO

TR5h a5AA9B
DD7FFA93G9 PAO7CAOQ

TR5Zd58GDA
D8C7GE83FD PAPBAGOO

Y9C898G
AD7977GDO3B7CGG99

TR5dP5BC8E
DD7FF8F3G9 PABA9OO

TR5dP5BC8G
DC8EACD3G9 PA7DGOO

TR5dP5DDDD
DC98F883G9BPCBFBOO

T_cR

ec0] dW gt 0T0r 1	89788	8C78D	ec0] dW P 0TRr 4TPr 4Tdr 4Tl r 4TQr 1	89788	8C78D
ec0] dW a t y 7QÉt é 0T[r 4T] r 1	89788	8C78D			

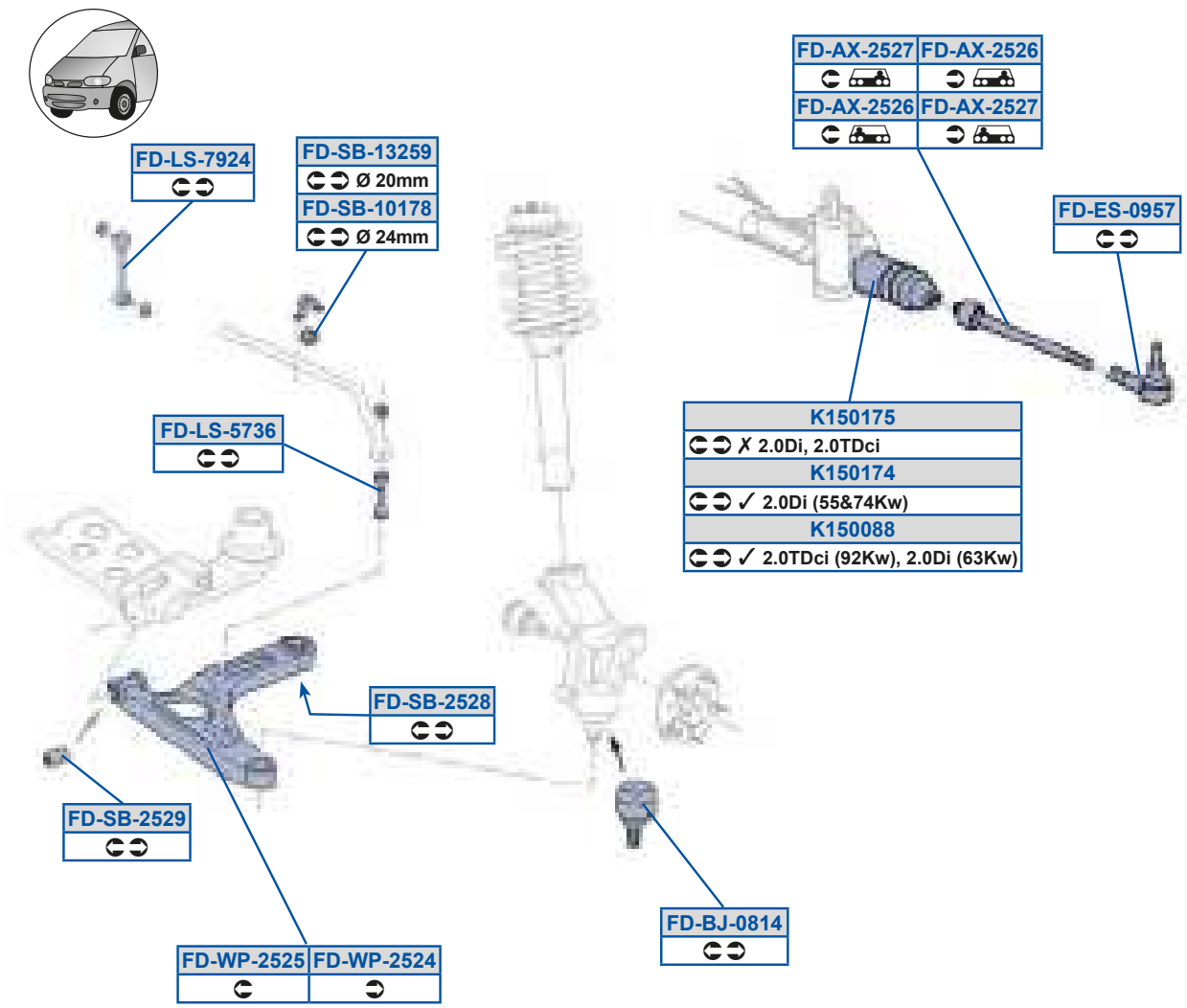

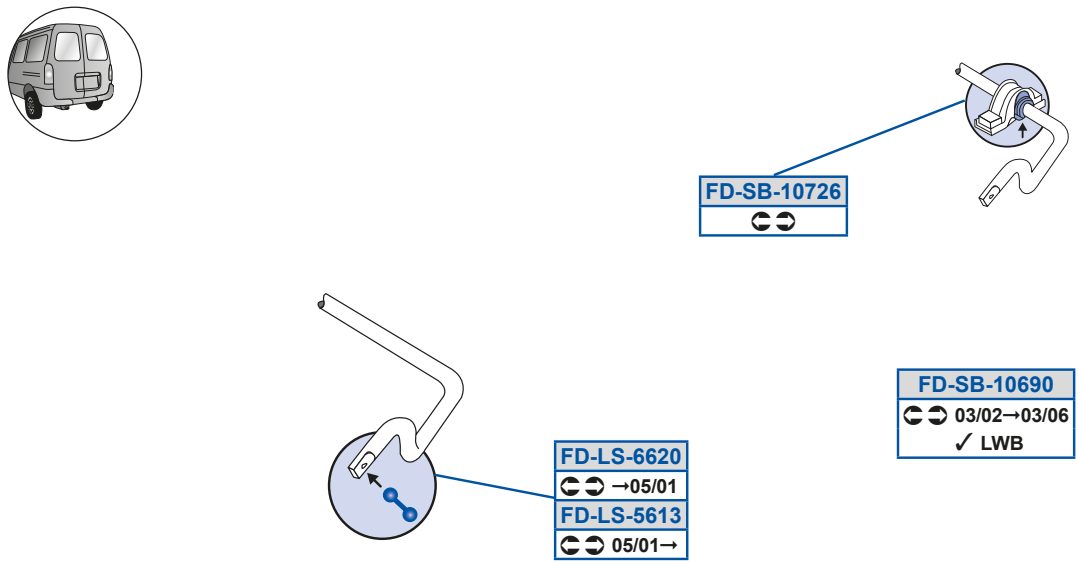

MOOG

TR5Oi 5>C>D
8AE7E873B7CGG9B

TR5Oi 5>C>E
8AE7E7G3B7CGG9A

TR5PX58F9B
8B8EAC938BC8G8B

TR5Sd58GCE
88AF9EC38AE7EB8

TR5Zd5CD9A
BABDABB3BBB7FFC

TR5Zd5CEAD
AEAD79F3TDC0CYBFAQQ

TR5Zd5DD>8
B7B97DF3BABDABB

TR5Zd5EG>B
8BGCDFC38EDAE8B

TR5dP5989EF
B7B8BFG

TR5dP598DG8
B7B8C98

TR5dP598E>D
B7B8BG7

TR5dP59A>CG
8EBFAD83AQ88CBFBQO

TR5dP5>C>F
8BGCE8E3B7B979B

TR5dP5>C>G
B7B8BC73B8A8EFF

TR5h a5>C>B
8BAFA8C38BAFA8D

TR5h a5>C>C
8BAFA8C38BAFA8D

Y9C88FF
987BD79A773987BDA7EGF

Y9C89EB
AD7977GD03B7CGG98

Y9C89EC
8DD9987

T_cR

ec0] dW P 0T0r r1	8B78D	ec0] dW P 0Tr r r1	8B78D
ec0] dW a t y 7QÉt é 0T[r r4T] r r1	8B78D 8F79B		

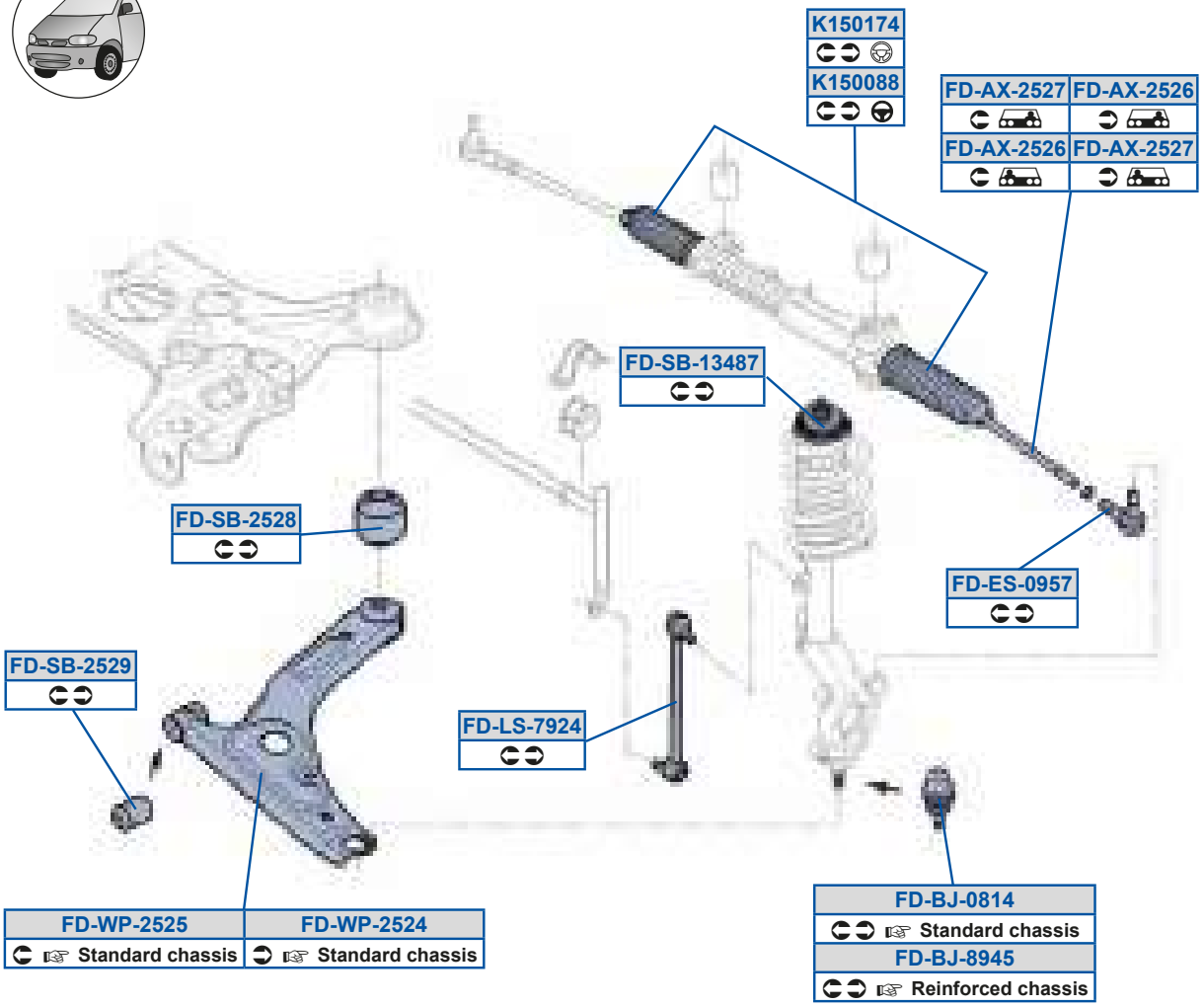

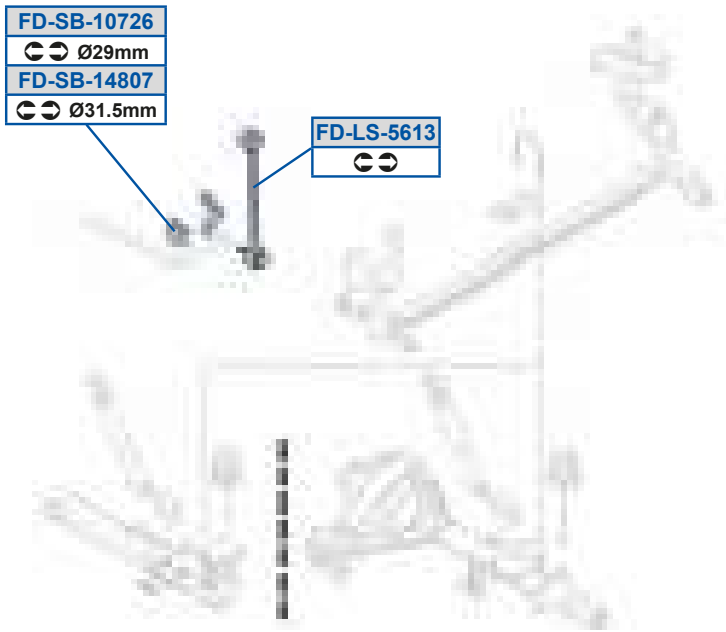

MOOG

TR5Oi 5>C>D
8AE7E873B7CGG9B

TR5dP59ABFE
8AEEGEA38BFFGD7

TR5Oi 5>C>E
8AE7E7G3B7CGG9A

TR5dP59BF8E
8F87EAD

TR5PX58F9B
8B8EAC938BC8G8B

TR5dP5>C>F
8BGCE8E3B7B979B

TR5PX5FGBC
8B8EAC838BC8G8E

TR5dP5>C>G
B7B8BC73B8A8EFF

TR5Sd58GCE
88AF9EC38AE7EB8

TR5h a5>C>B
8BAFA8C38BAFA8D

TR5Zd5CD9A
BABDABB3BBB7FFC

TR5h a5>C>C
8BAFA8C38BAFA8D

TR5Zd5EG>B
8BGCDFC38EDAE8B

Y9C88FF
987BD79A773987BDA7EGF

TR5dP598E>D
B7B8BG7

Y9C89EB
AD7977GD03B7CGG98

OQQ_cR g OQQ4QR1	8A7GA 9; 7GE	OQQ_cR g OQS4QTr 1	8G7GC 987GF
OQQ_cR g Ox wkv OQS1	8G7GA 8; 7GF	OQQ_cR g Q x OQR1	8G7GA 9; 7GF

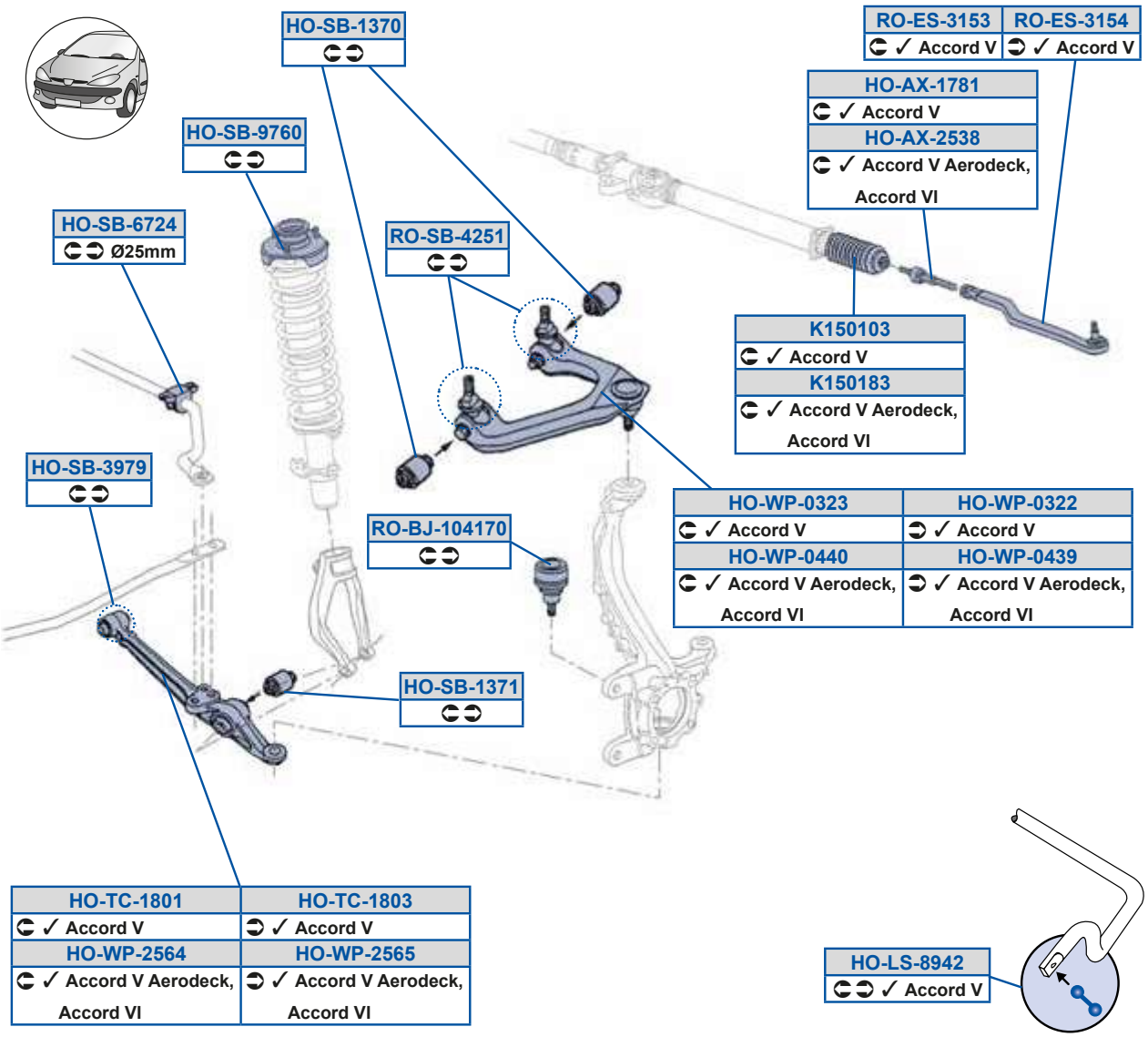

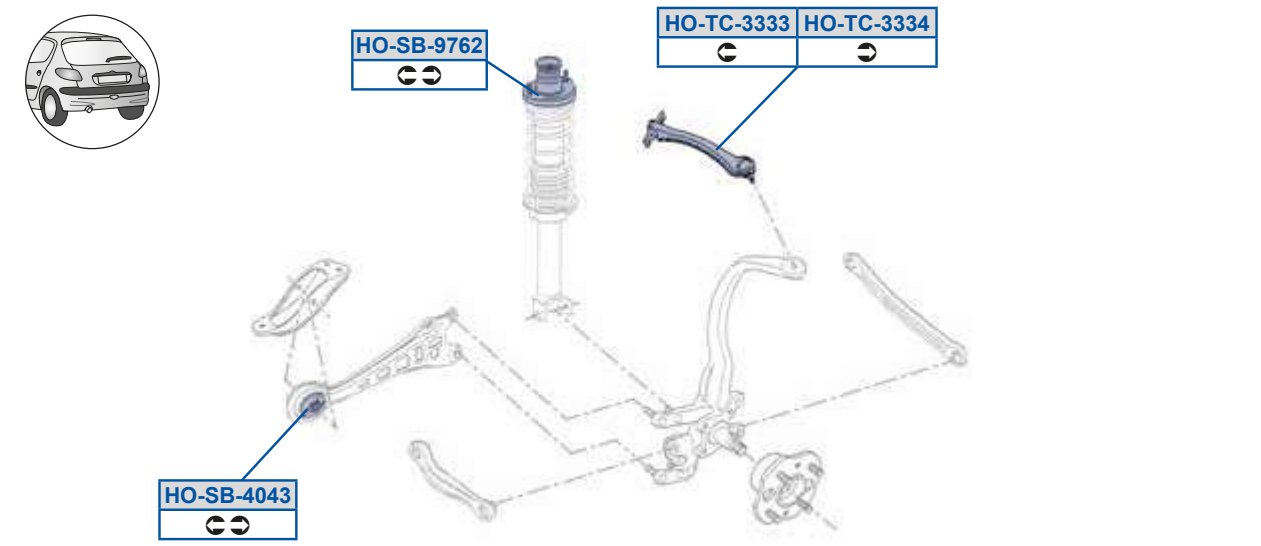

V_5Oi59EF9
CAC98oa B77A3CAC98oa B78A

V_5dP5GED8
C9D98DAB7773C9D98oP977B

Y9C898A
CACABonAdC9

V_5Oi5>CAF
CA787o B777

V_5dP5GED>
C8D98oFBO783C8DFCon777B

Y9C89FA
CACABoFBO78

V_5Zd5FGB>
G7889oa B797

V_5ha58A>>
C8BC7oa B78A3C8BC7oa B79A

c_5PX598B9E8
C8997oFBO783C8997oFBO79

V_5dP59AE8
C8BC7ot AS793C8BCConA77A

V_5ha58A>A
C8BD7oa B78A3C8BD7oa B79A

c_5Sd5A9CA
CACD7oa B77A3CACD7oa B77B

V_5dP59AE9
C8AC7onAO793C8ACCoVA787

V_5ha58BAG
C8BC7o B7773C8BC7o BO77

c_5Sd5A9CB
CACB7oFBO783CACB7oa B77A

V_5dP5AGEG
C8AGAoa B78A

V_5ha58BB8
C8BC7o B7773C8BD7o B777

c_5dP5B>C9
C8BC7o BO77 /40

V_5dP5B8BA
C9AE7onAX77

V_5ha5>CDB
C8ADCo B7773C8ADCo EO77

V_5dP5DE>B
C8A7Doa B787

V_5ha5>CDC
C8ACCo B7773C8ACCo EO77

V_] RO

OQQ_cR gWQQY4QU4QV4QTF1	8A7GE 9; 78A	OQQ_cR gWQ x QQU1	9; 7GE 8D78A
OQQ_cR gWWt vÉut v QQV4QZ1	9; 7GG 9; 78;	OQQ_cR gWDx wkv QQT1	8E7GE 8G78C

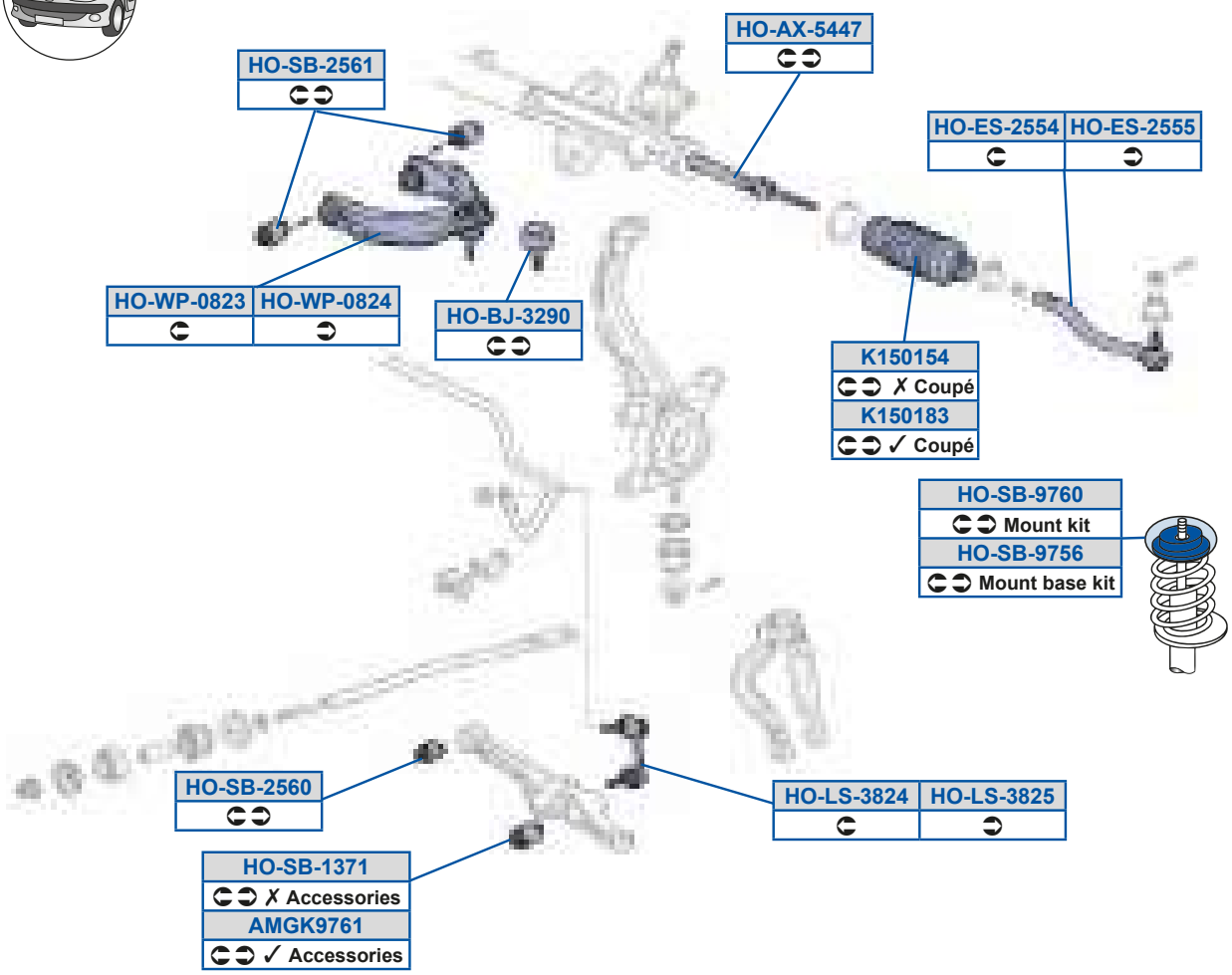

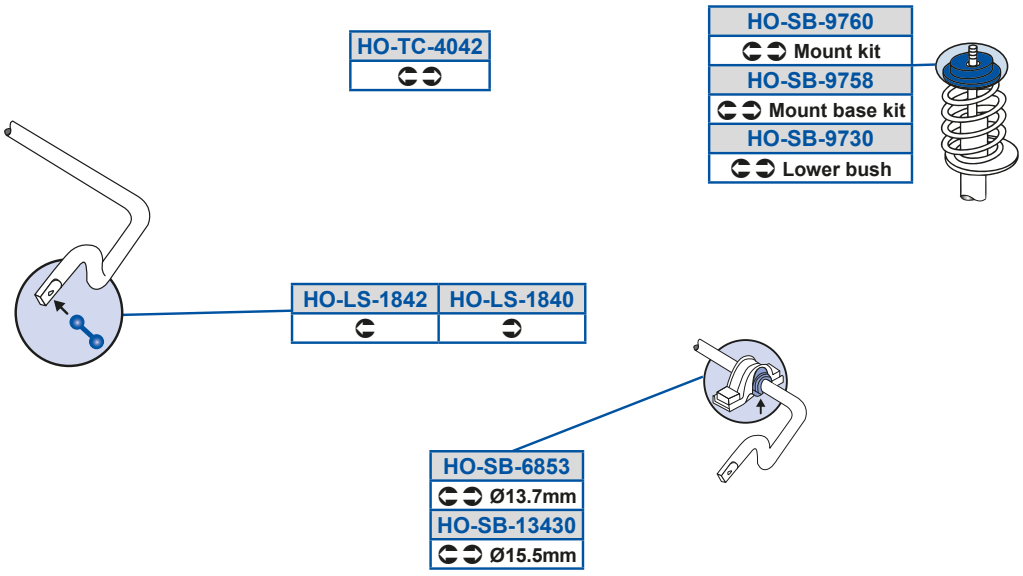

MOOG

O[UYGED9
C8F87oa B77B

V_ 5Zd5AF>C
C8A97oFB078

V_ 5dP5GECF
C9DECoFB0783C9DECoSi 079

V_ 5Oi 5CBBE
CA787oFB078

V_ 5dP59ABA8
C8A7DoFE0783C9A7DoFB078

V_ 5dP5GED8
C9D98DAB7773C9D98oP977B

V_ 5PX5A>G8
C8BD7o8OS78

V_ 5dP59AE9
C8AC7onA0793C8ACCoVA787

V_ 5eQ5B8B>
C9AG7oFB078

V_ 5Sd5>CCB
CACD7o8OS78

V_ 5dP5>CD8
C8ACCo8OS77 /40

V_ 5h a58F>A
C8BD7o8OS783C8BD7o9 77A

V_ 5Sd5>CCC
CACB7o8OS783CACB7oFB078

V_ 5dP5>CD9
C8BC7o8OS78 /40

V_ 5h a58F>B
C8BC7o8OS783C8BC7o9 77A

V_ 5Zd59FB8
C9A97oFB0783C9A97oR0078

V_ 5dP5DFCA
C9A7Do7078C3C9A7DoR0078

Y9C89CB
CACADo8OS78

V_ 5Zd59FB>
C9A9CoFB0783C9A9CoR0078

V_ 5dP5GEA8
C8E99oSe77A3C9D99oFB078

Y9C89FA
CACABoFB078

V_ 5Zd5AF>B
C8A98oFB078

V_ 5dP5GECD
C8DECoFB0783C8DFDoFB078

V_] RO

OQQ_cR gWOQZ4Q] 1	8978A 8G79;	OQQ_cR gWOQ[1	8G78; 8978F
OQQ_cR gWe x OQ[4Q] 1	8B78A 8C78F		

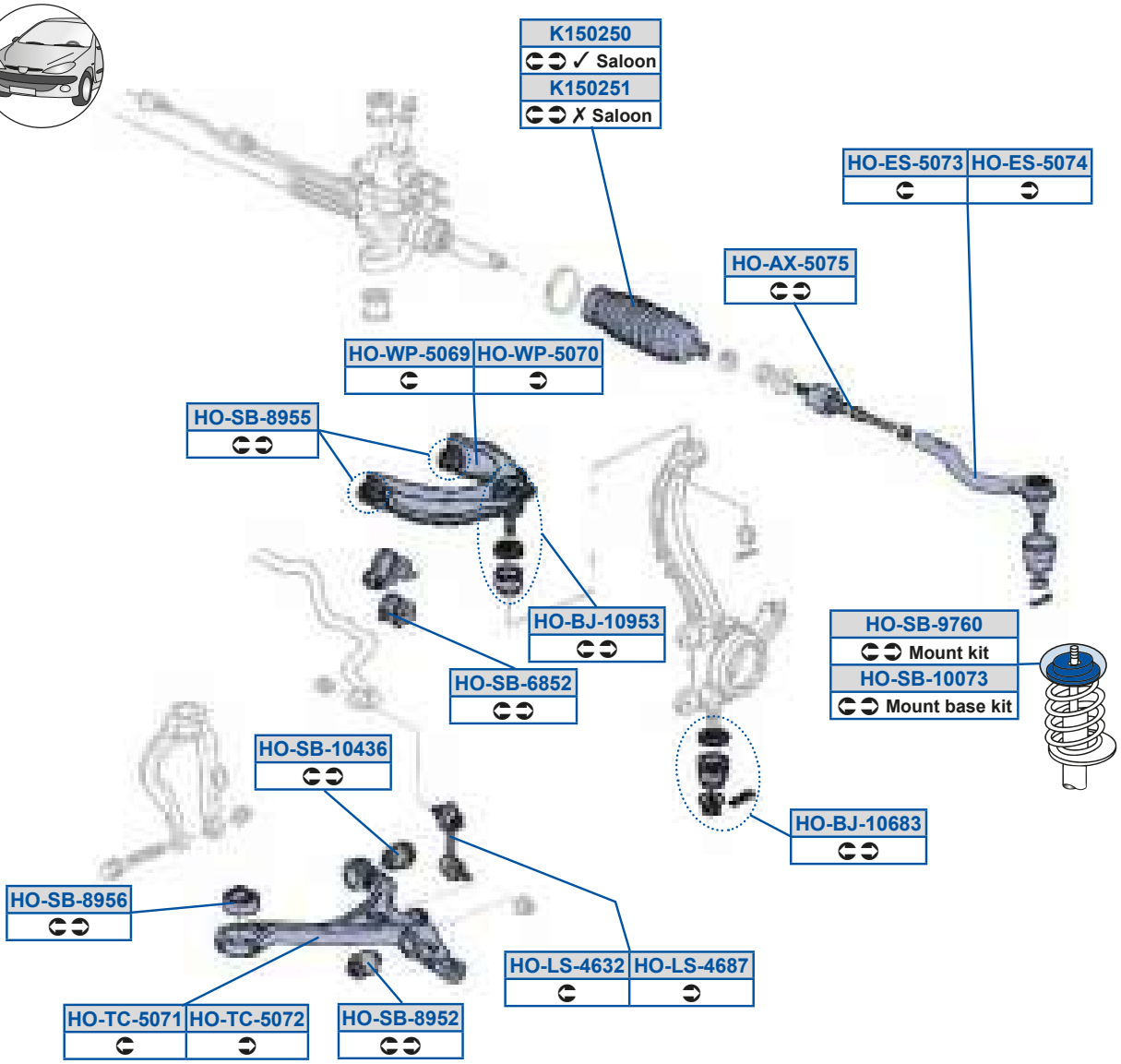

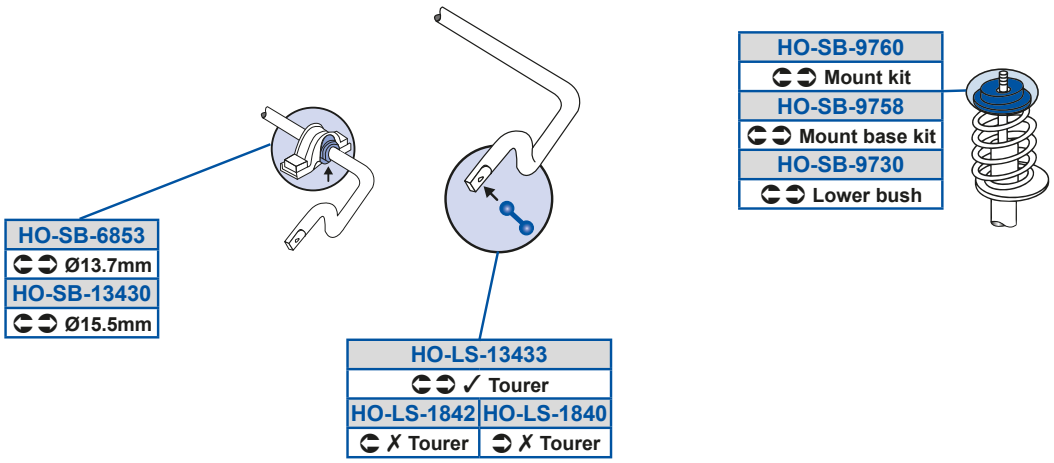

V_ 5Oi 5C8EC
CA787oRO078

V_ 5Zd5BDA>
C8A98oSOS78

V_ 5dP5FGCD
C8AG8oSO77B

Y9C8>C8
CACABoSOU79

V_ 5PX598DFA
C89974oRO4A7C3C8997oRO079

V_ 5Zd5BDFE
C8A97oSOS78

V_ 5dP5GEA8
C8E99oSe77A3C9D99oFBO78

Y9C8>C9
CACABoSRU78

V_ 5PX598GCA
C8BC7oRO078 /40

V_ 5dP5988EA
C8DECoRO0783C8DFDoRO078

V_ 5dP5GECF
C9DECoFBO783C9DECoSi 079

V_ 5Sd5C8EA
CACD7oRO078

V_ 5dP598BAD
C8AGAoSO77B

V_ 5dP5GED8
C9D98DAB7773C9D98oP977B

V_ 5Sd5C8EB
CACB7oRO0783CACB7oRO079

V_ 5dP5DFC>
C8A7DoSOS79

V_ 5eQ5C8E9
C8AD7oRO0783C8AD7oSOS78

V_ 5Zd59ABAA
C9A97oSR77A

V_ 5dP5DFCA
C9A7Do7O78C3C9A7DoRO078

V_ 5eQ5C8E>
C8AC7oRO0783C8AC7oSOS78

V_ 5Zd59FB8
C9A97oFBO783C9A97oRO078

V_ 5dP5FGC>
C8F87oRO078

V_ 5h a5C8DG
C8BD7oRO078

V_ 5Zd59FB>
C9A9CoFBO783C9A9CoRO078

V_ 5dP5FGCC
C8BC7oRO078 /40

V_ 5h a5C8E8
C8BC7oRO078

V_] RO

OQQ_cR gWWOQa1	8G78E	OQQ_cR gWWOQf 1	8D78F
OQQ_cR gWWS t x OQh 1	8E78F		

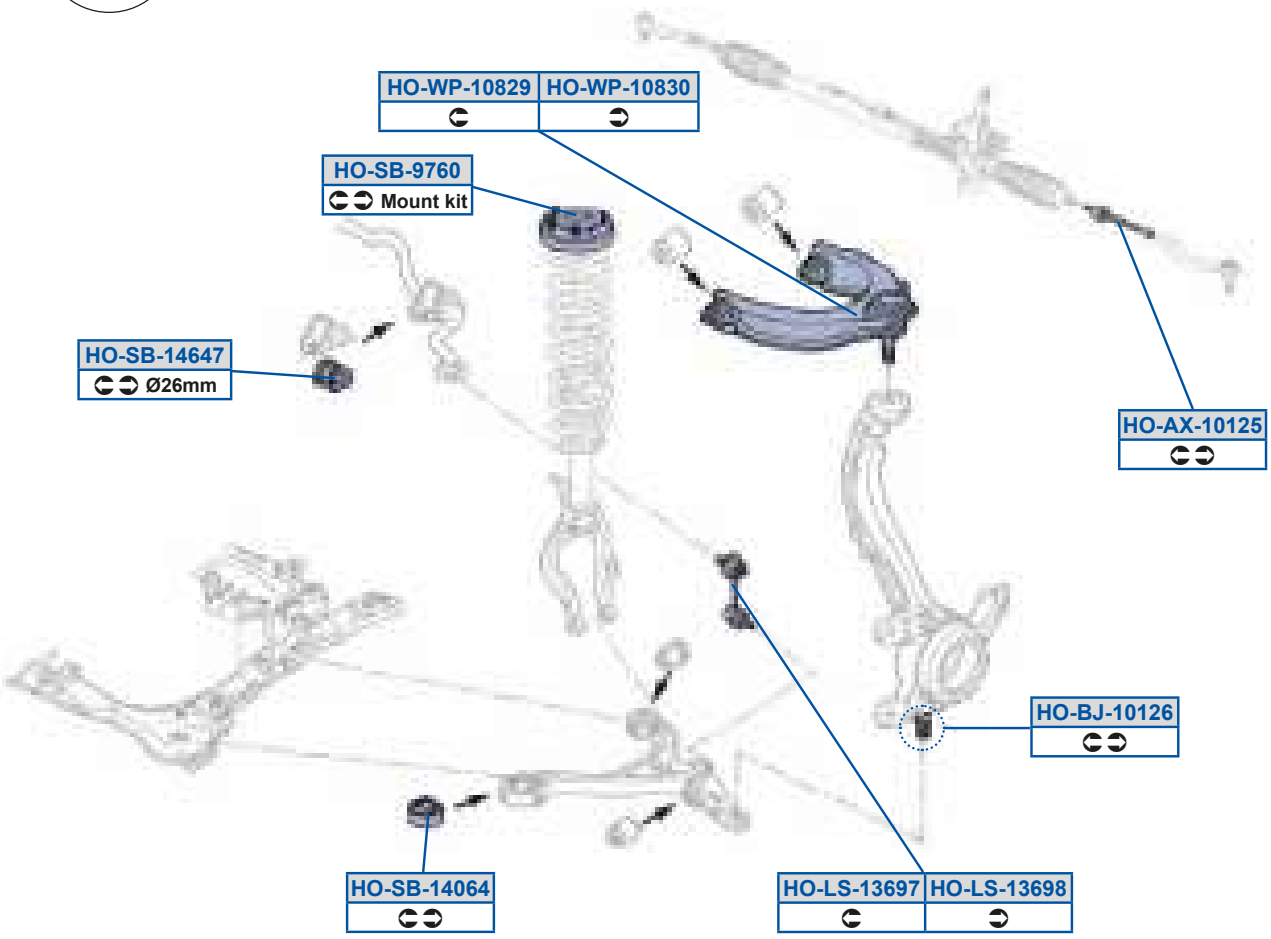

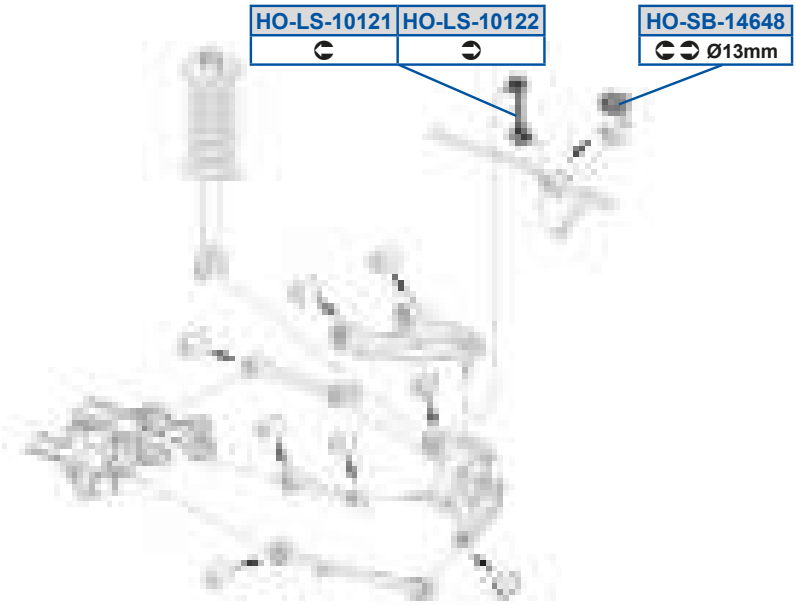

MOOG

V_5Oi 5989>C
CAD87t Z8U78

V_5dP59B8DB
C8AG8t 07078

V_5dP5GECF
C9DECoFB0783C9DECoSi 079

V_5PX5989>D
C8997t 070783C8997t 07079

V_5dP59BDBF
C9A7Dt 08079

V_5dP5GED8
C9D98DAB7773C9D98oP977B

V_5Zd5989>9
C9A9Ct 07078

V_5dP5DFC>
C8A7DoSOS79

V_5h a598F>G
C8C97t 0707A

V_5Zd5989>>
C9A97t 07078

V_5dP5DFCA
C9A7Do7078C3C9A7DoR0078

V_5h a598FA8
C8C87t 0707A

V_5Zd59ADGE
C8A9Ct 07078

V_5dP5FGC>
C8F87oR0078

V_5Zd59ADGF
FC GA ADC7

V_5dP5FGCC
C8BC7oR0078 /40

V_5dP5988EA
C8DECoR00783C8DFDoR0078

V_5dP5FGCD
C8AG8oS077B

V_5dP598BAD
C8AGAoS077B

V_5dP5GEA8
C8E99oSe77A3C9D99oFB078

V_] RO

QWgWQ g Q x 0SX1	8F7GA 8A7GD	QWgWQ g Vt vÉut v 0SU1	987G9 997GC
QWgWQ g dt 0SU4SV1	987G9 9; 7GC	Qci WW0SV4SU1	8A7G; 9; 7GF

Qz zt g 0GC9 5L 9GCD15 Qci WW0GC> 5L 9GCF1

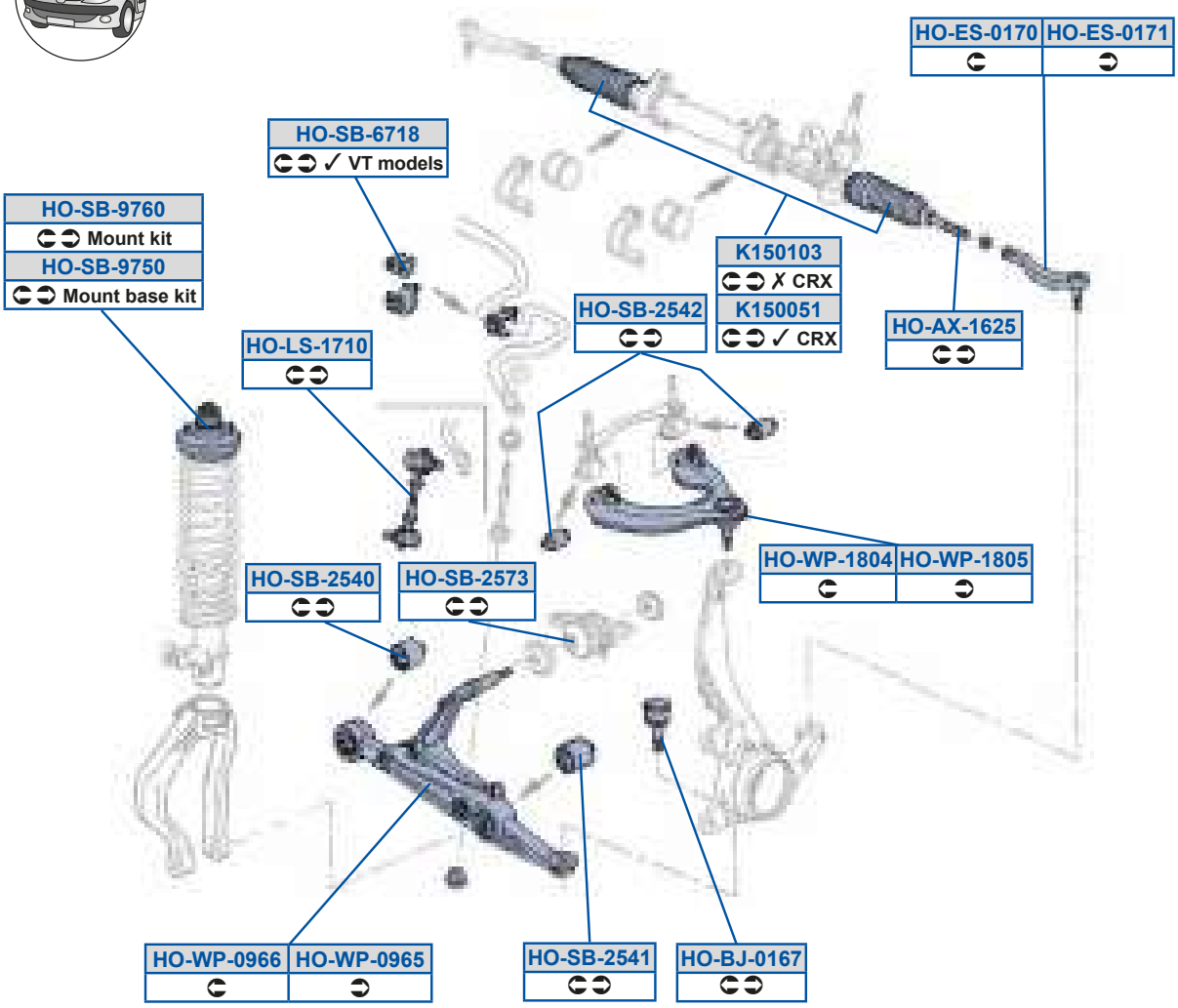

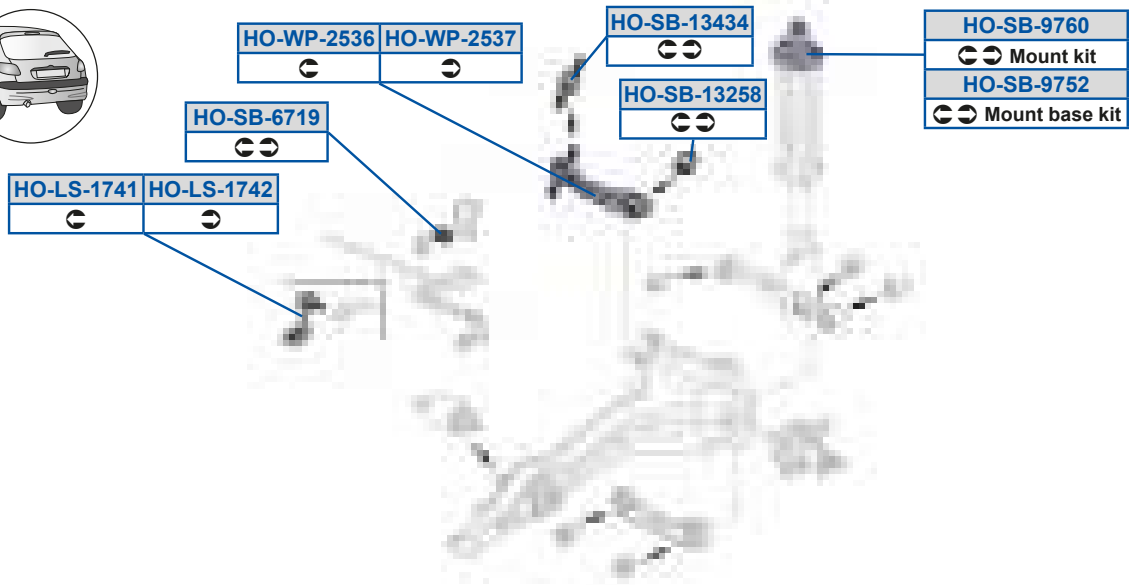

MOOG

V_5Oi59D>C
CA787onA7873CA787ot7777

V_5dP59ABAB
C9AGAonA77B

V_5dP5GED8
C9D98DAB7773C9D98oP977B

V_5PX589DE
C8997o7B77A3C8997oEBS77

V_5dP5>CB8
C8BC7o7B79A /40

V_5ha58GDC
C8AC7o7B7773C8AC7o7BU77

V_5Sd589E8
CACD7o7B77A3CACD7o7B78A

V_5dP5>CB9
C8AC7o7B777 /40

V_5ha58GDD
C8AD7o7B7773C8AD7o7BU77

V_5Sd589E9
CACB7o7B77A3CACB7o7B78A

V_5dP5>CB>
C8AC7o7B777 /40

V_5ha59F8B
C8BD7o7879A3C8BD7o78O79

V_5Zd59E98
C8A97o7B77A

V_5dP5>CEA
C8AG8o7B77C

V_5ha59F8C
C8BC7o7879A3C8BC7o78O79

V_5Zd59EB9
C9A98o7B77A3CAA98o7B77A

V_5dP5DE9G
C9A8Co7Bd77

V_5ha5>CAD
C9B77oVA7A73C9B77on7O77

V_5Zd59EB>
C9A97o7B77A

V_5dP5GEC8
C8DECo8777B3C8DECon777B

V_5ha5>CAE
C9AG7oVA7A73C9AG7oVAO77

V_5dP59A>CF
C9AGCoVA77B

V_5dP5GEC>
C9DECon777A3C9DFDon777A

Y9C898A
CACABonAdC9

V_] RO

QWgWQ gWOx wxv 0[P4[Q1	8B7GF 8; 789	QWgWQ gWTt ut v 0[O4[P1	8G7GB 8; 789

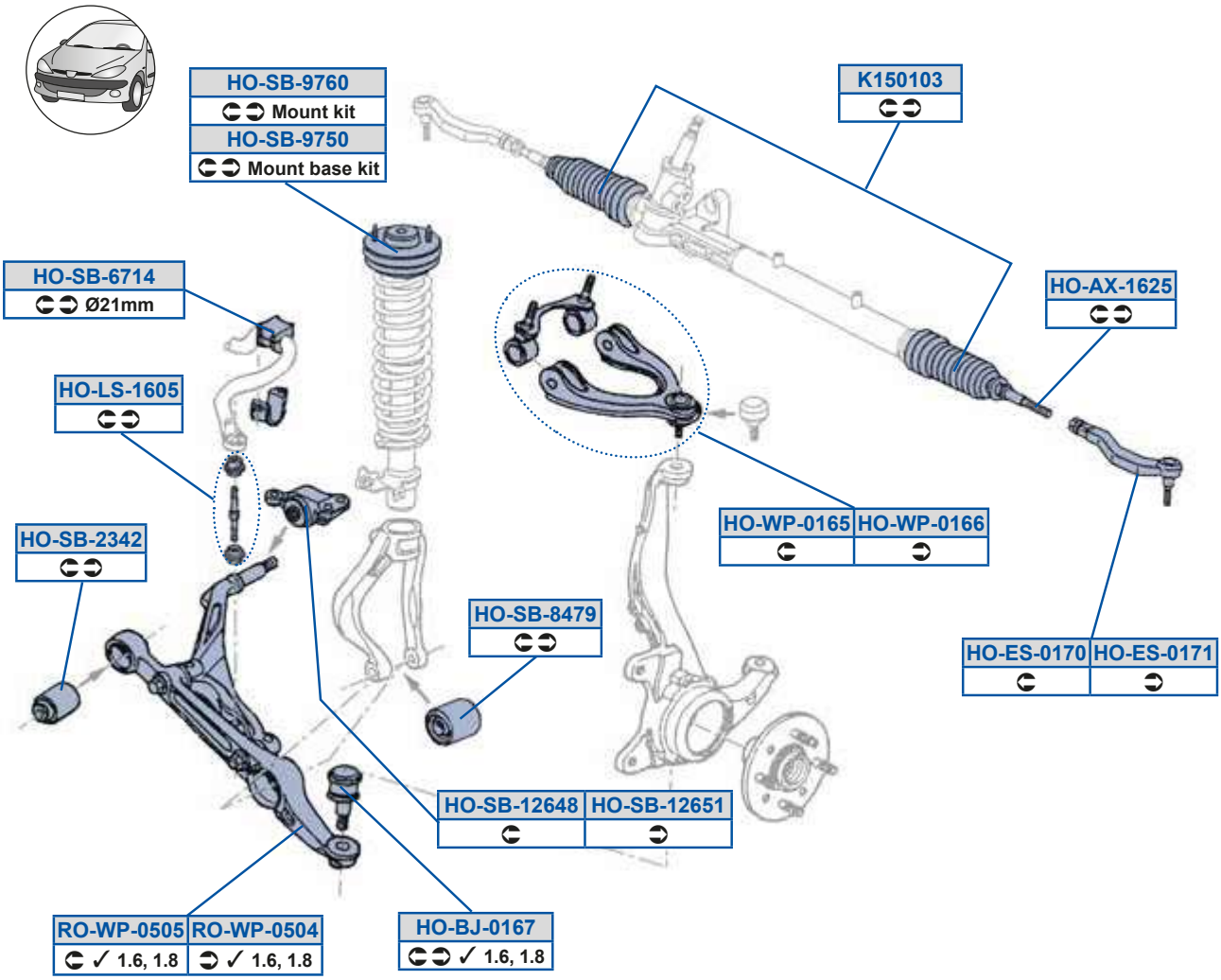

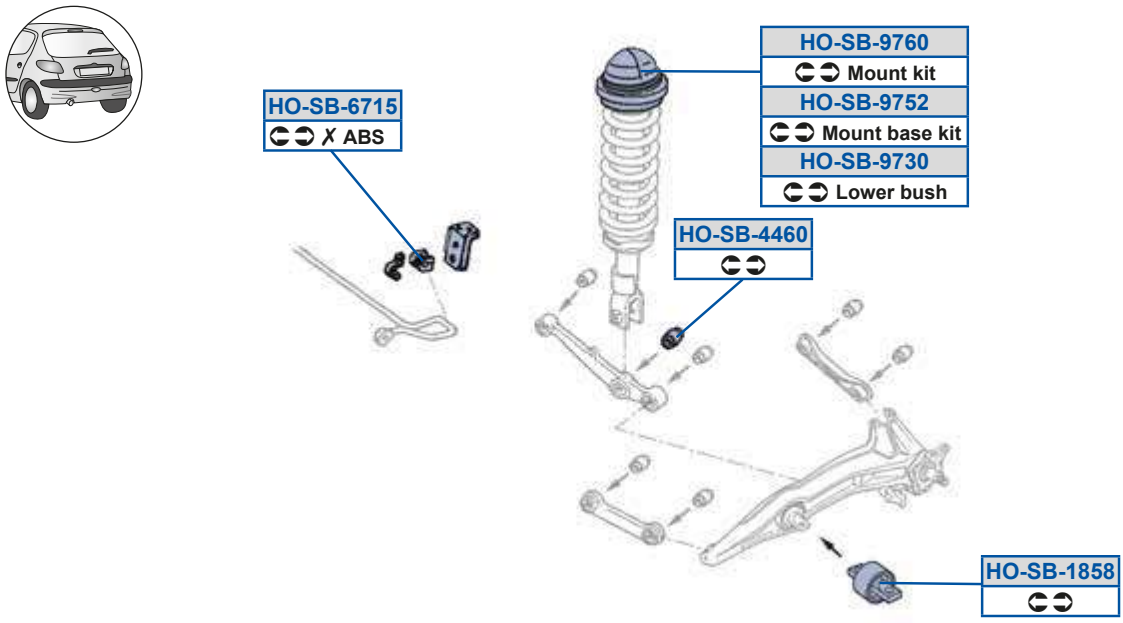

MOOG

V_5Oi59D>C
CA787onA7873CA787ot7777

V_5dP5>AB>
C8AG9onA78B3C8AG9onA79B

V_5dP5GED8
C9D98DAB7773C9D98oP977B

V_5PX589DE
C8997o7B77A3C8997oEBS77

V_5dP5BBD8
C9D99oVA787

V_5ha589DC
C8BC7on70793C8BC7onA78A

V_5Sd589E8
CACD7o7B77A3CACD7o7B78A

V_5dP5DE9B
C8A7DonAd77

V_5ha589DD
C8BC7on70793C8BC7onA78A

V_5Sd589E9
CACB7o7B77A3CACB7o7B78A

V_5dP5DE9C
C9A8ConA777

Y9C898A
CACABonAdC9

V_5Zd59D8C
G7889oS7777

V_5dP5FBEG
C8F87oVA77A3C8F87oVA77B

c_5ha58C8B
C8AC7onA7973C8AC7onA078

V_5dP59>DBF
C8AGDonAd793C8AGDonAd7A

V_5dP5GEA8
C8E99oSe77A3C9D99oFB078

c_5ha58C8C
C8AD7onA7973C8AD7onA078

V_5dP59>DC9
C8AGConAd793C8AGConAd7A

V_5dP5GEC8
C8DECo8777B3C8DECon777B

V_5dP59FCF
C9AFConA7773C9AFCotAU78

V_5dP5GEC>
C9DECon777A3C9DFDon777A

V_] RO

QWgWQ gWWQ x 0S[; 1	8; 789 9; 78C	QWgWQ gWWVt vÉut v 0Sf 4Sa4Sg1	8A7GG 8; 78D
QWgWQ gWWdt 0Sd4Se1	9; 788 8B78D		

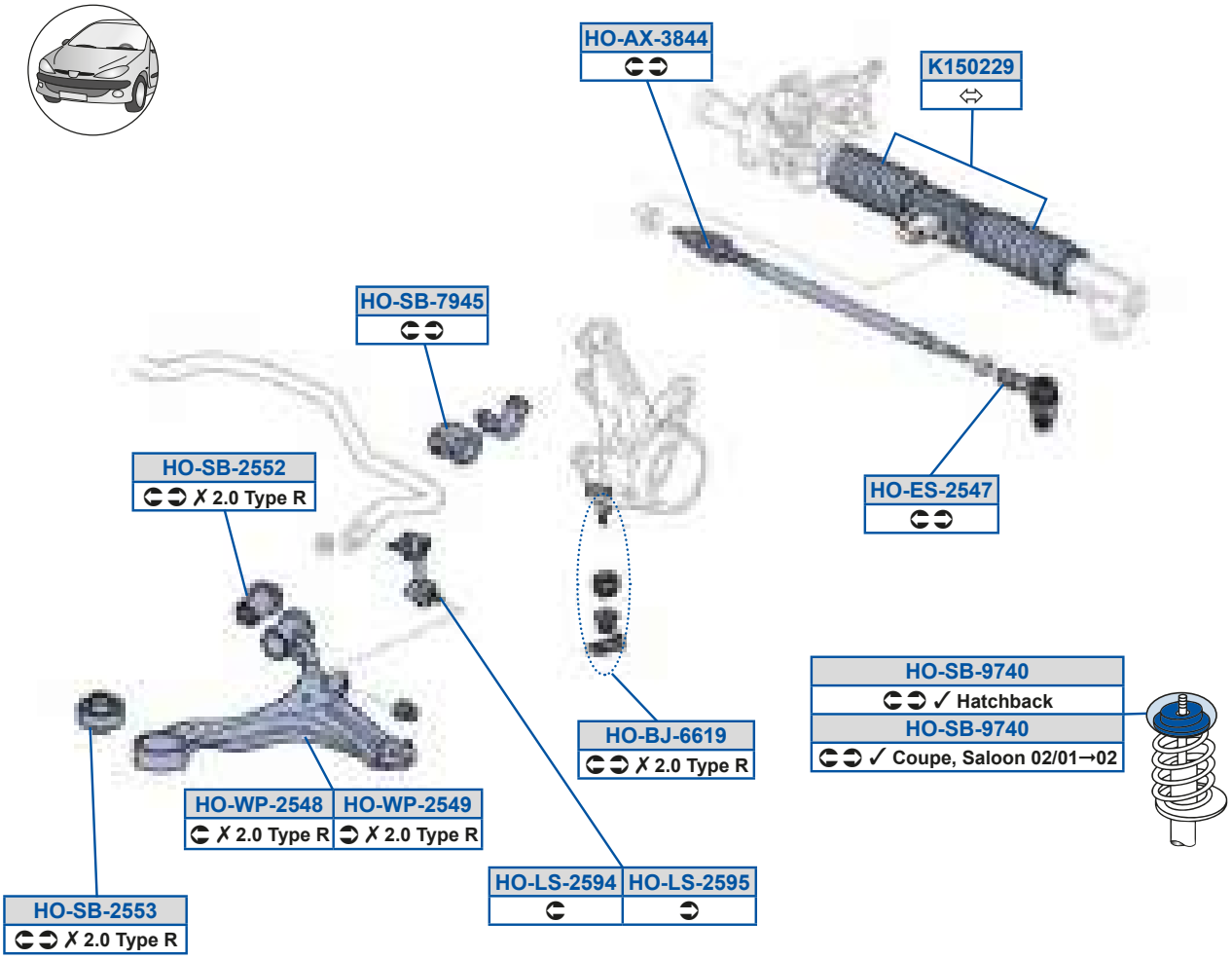

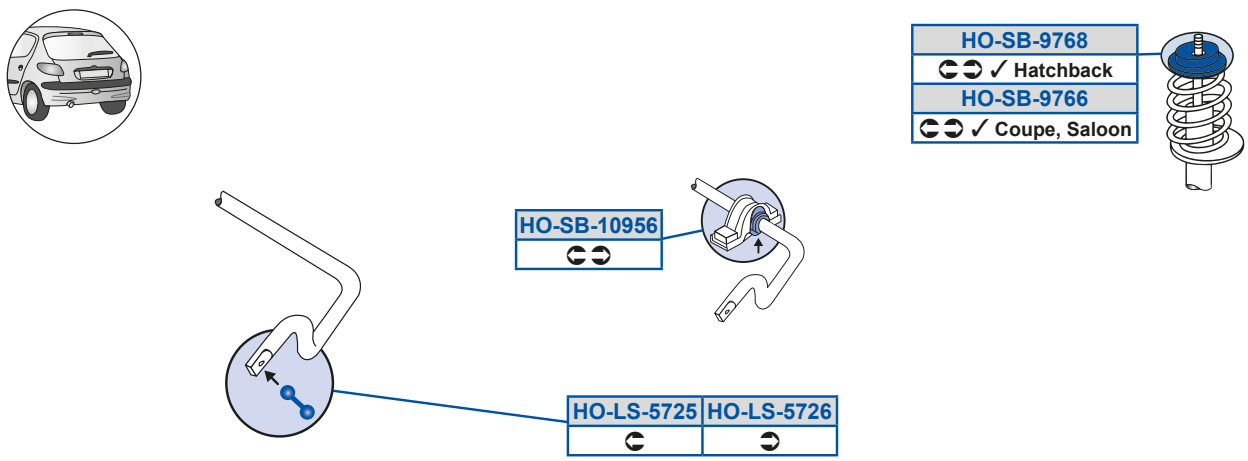

V_5Oi5AFBB
CAC98oC077A

V_5dP5>CC>
C8AG9oC077B

Y9C8>>G
CAD7AoCOX78

V_5PX5DD9G
C8997oC077A3C8997oCOX87

V_5dP5>CCA
C8AG8oC079B

V_5Sd5>CBE
CACB8oC077A

V_5dP5EGBC
C8A7DoDR77C

V_5Zd5>CGB
C8A98oC077A

V_5dP5GEB8
C8E9DoC07793C8E9DoC077B

V_5Zd5>CGC
C8A97oC077A

V_5dP5GEDD
C8D98oFB0783C8E9Fon777A

V_5Zd5CE>C
C9A98oC078A

V_5dP5GEDF
C8DA8o9077B3C8DFGo9077B

V_5Zd5CE>D
C9A97oC078A

V_5ha5>CBF
C8AD7oC007A3C8AD7oD0077

V_5dP598GCD
C9A7D4oC0477A

V_5ha5>CBG
C8AC7oC007A3C8AC7oD0077

V_] RO

QWgWQ gWWWt vÉut v OT] 4TY1	8G78C		

Qz ƶt gWWWr tysrtË

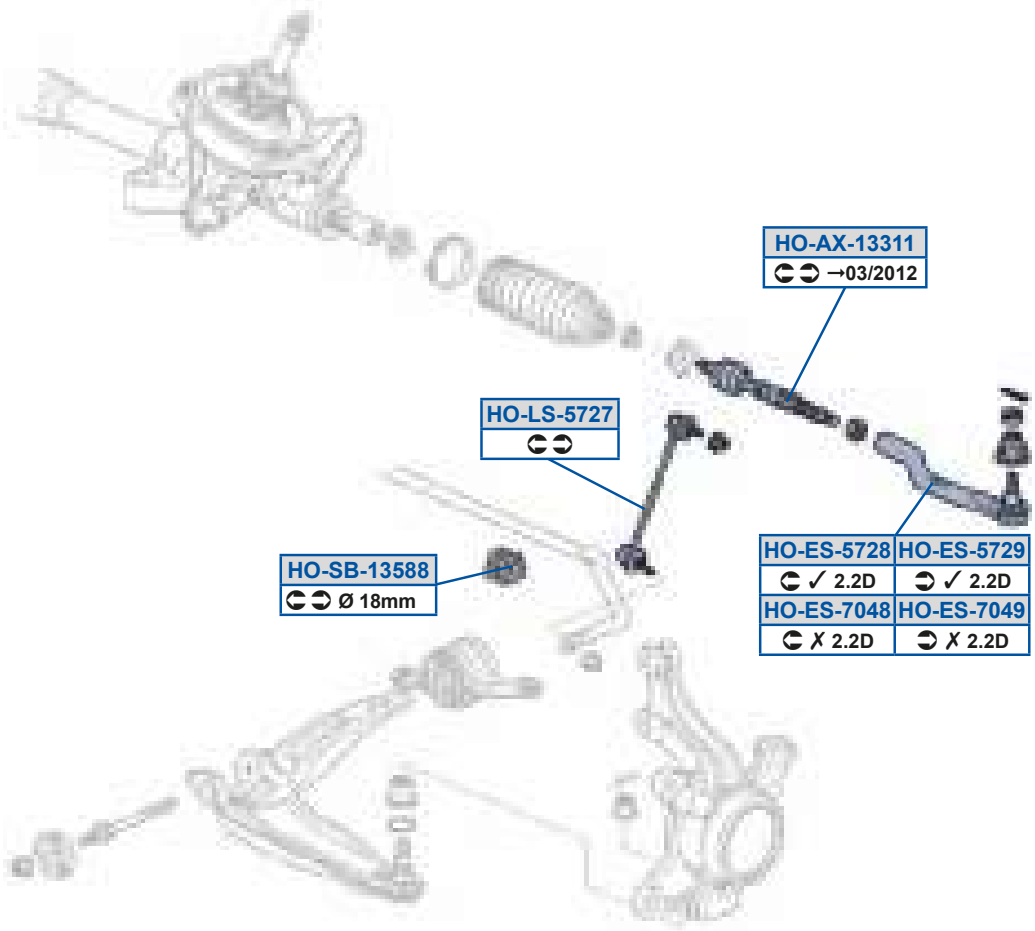

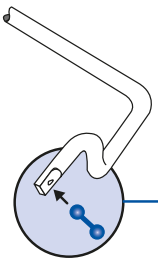

HO-LS-7899	HO-LS-7900

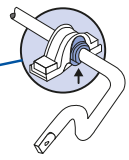

V_] RO

MOOG

V_5Oi59AA99
CAD87odPX78

V_5dP59ACFF
7DC87oaUA7C

V_5Sd5CE>F
CACD7oaX77A

V_5dP59ACG9
C9A7DoPO78

V_5Sd5CE>G
CACB7oaX77A

V_5Sd5E8BF
CACD7oaU77A3CACD7oaX77A

V_5Sd5E8BG
CACB7oaU77A3CACB7oaX77A

V_5Zd5CE>E
C8A97oaUS78

V_5Zd5EFGG
C9A98odOO78

V_5Zd5EG88
C9A97odOO78

V_] RO

QWWQ gWWdt	0TR4T01	8G78C		

Qz zt gWWdré

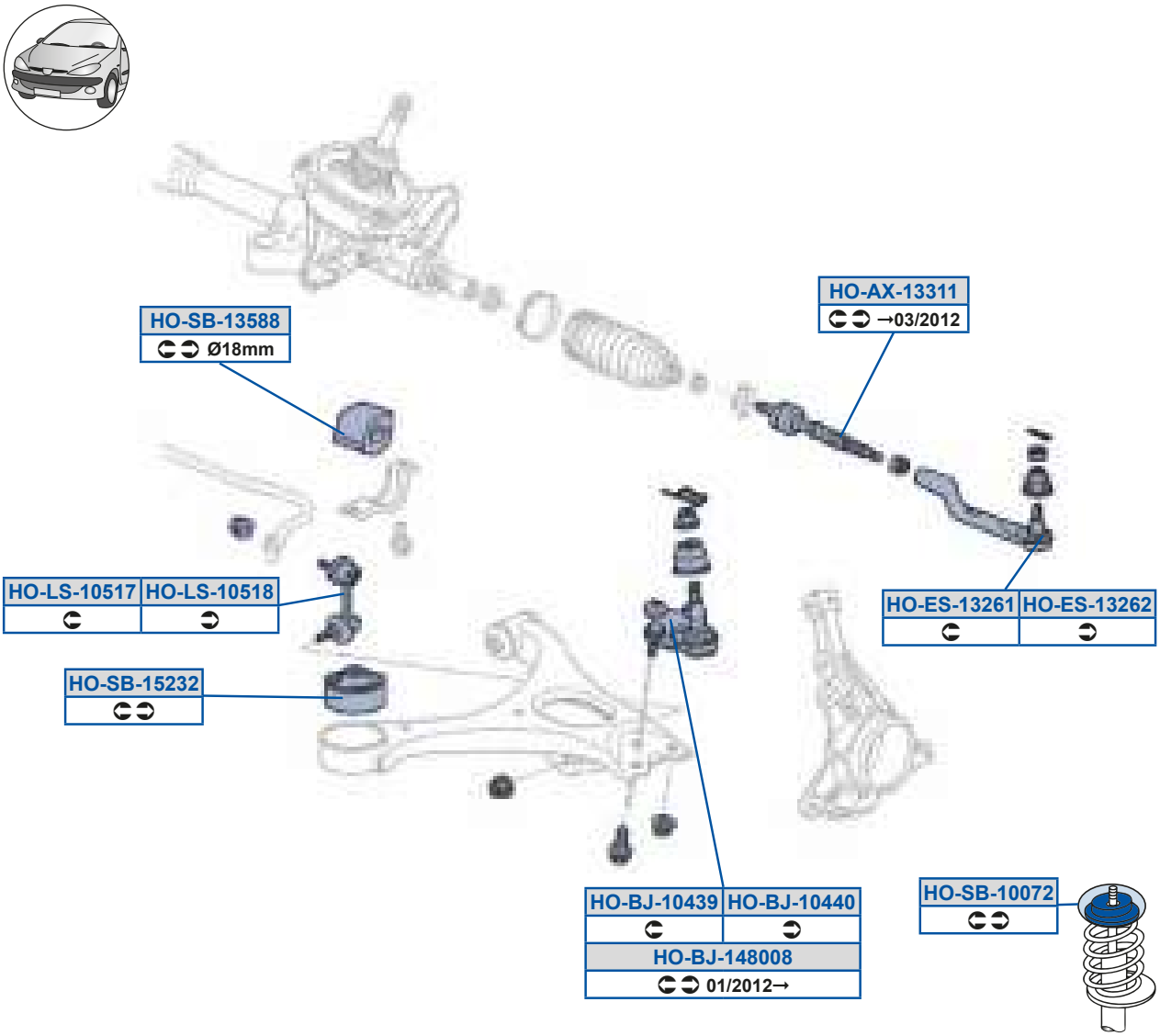

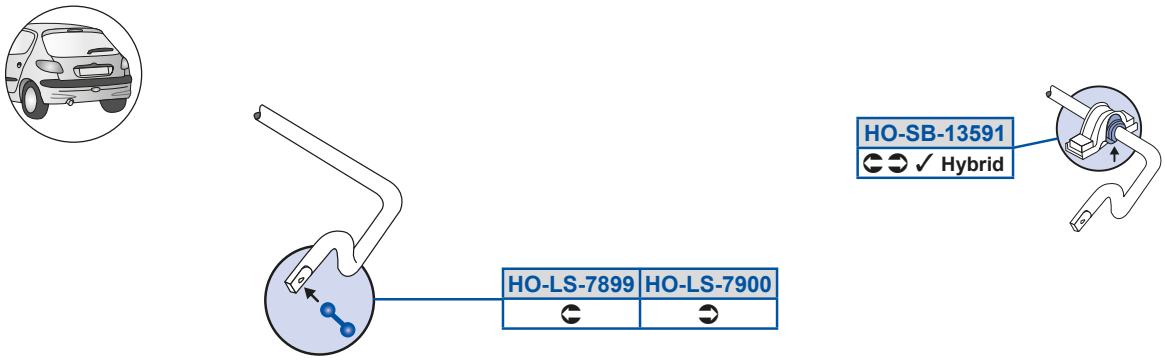

V_] RO

V_ 5Oi 59AA99
CAD87odPX78

V_ 5Zd5EFGG
C9A98odO078

V_ 5PX598BAG
C89A7odO0793C89A7odO07A

V_ 5Zd5EG88
C9A97odO078

V_ 5PX598BB8
C8997odO0793C8997odO07A

V_ 5dP5988E>
C8E9DodO78A3C8E9DodOU78

V_ 5PX59BF8F
C8997tn7O78

V_ 5dP59ACFF
7DC87 oa U A7C

V_ 5Sd59A>D9
CACB7odO0783CACD7odO078

V_ 5dP59ACG9
C9A7Do PO78

V_ 5Sd59A>D>
CACB7odO0783CACB7odO079

V_ 5dP59C>A>
C8AG8tn7A7C

V_ 5Zd598C9E
C8A98odO079

V_ 5Zd598C9F
C8A97odO079

V_] RO

Qc5g W0cR1	987GC 8; 78;		

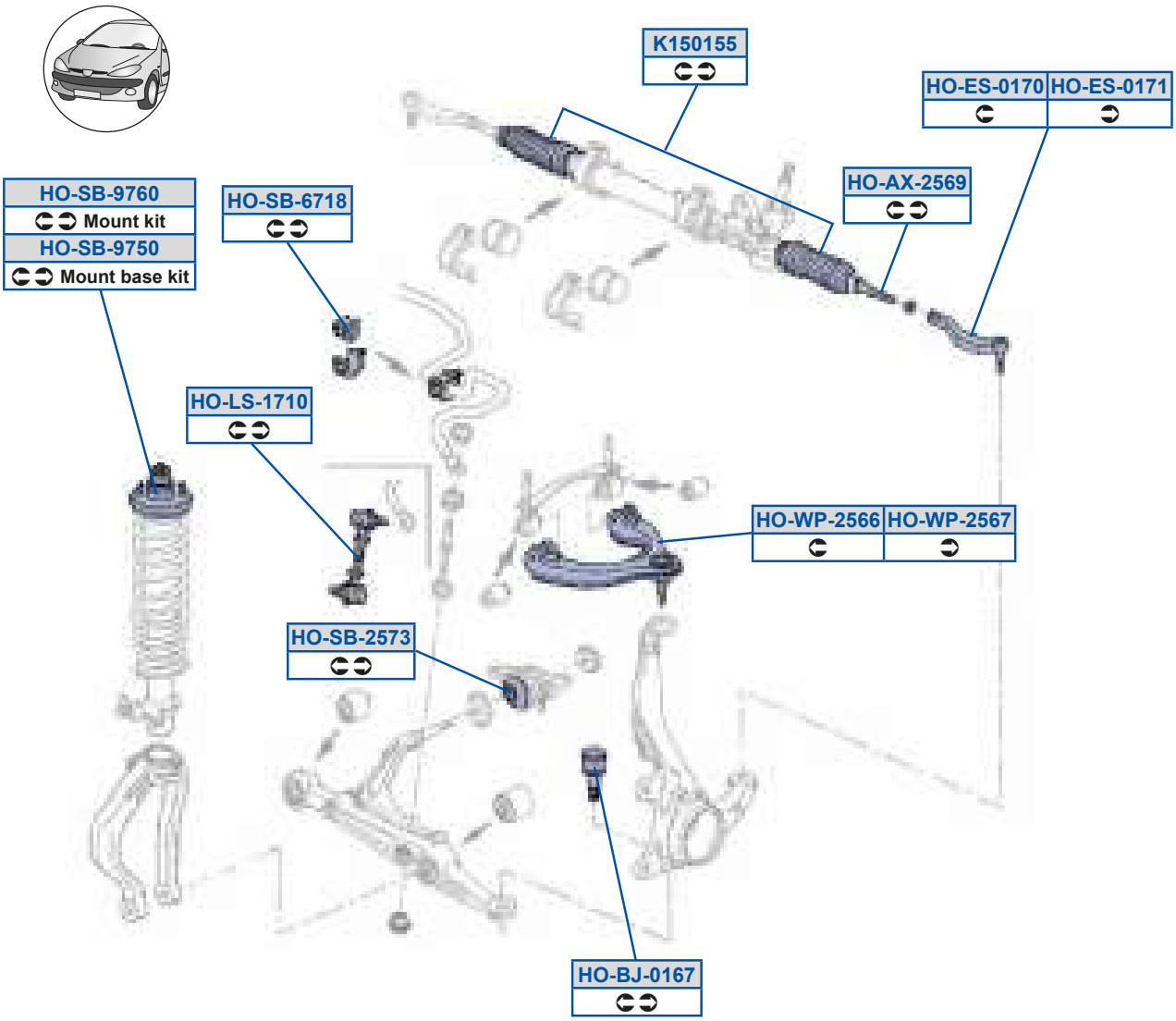

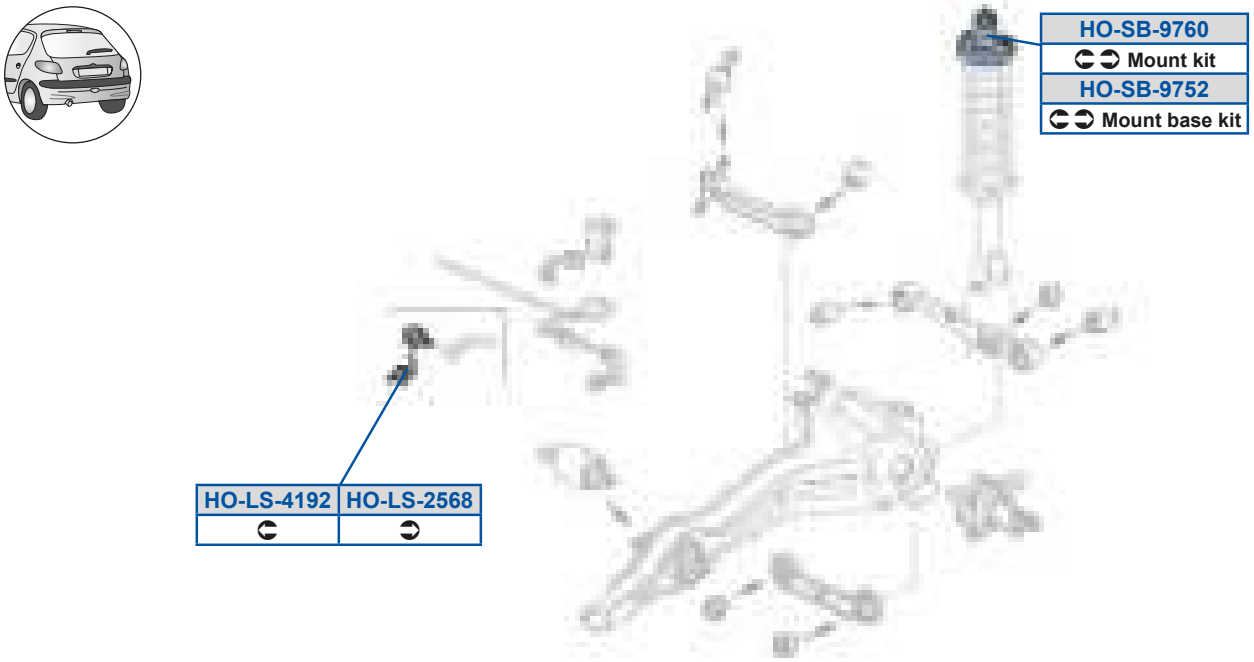

MOOG

V_5Oi5>CDG
CA787o877773CA787o8777A

V_5dP5DE9F
C8A7Do7Bd78

V_5PX589DE
C8997o7B77A3C8997oEBS77

V_5dP5GEC8
C8DECo8777B3C8DECon777B

V_5Sd589E8
CACD7o7B77A3CACD7o7B78A

V_5dP5GEC>
C9DECon777A3C9DFDon777A

V_5Sd589E9
CACB7o7B77A3CACB7o7B78A

V_5dP5GED8
C9D98DAB7773C9D98oP977B

V_5Zd59E98
C8A97o7B77A

V_5h a5>CDD
C8BD7o7B78A3C8BD7o87797

V_5Zd5>CDF
C9A97o8777A3C9A98o8777A

V_5h a5>CDE
C8BC7o877973C8BD7o7B79A

V_5Zd5B9G>
C9A97o8777A3C9A98o8777A

Y9C89CC
CACABoZBX783CACABonAdC9

V_5dP5>CEA
C8AG8o7B77C

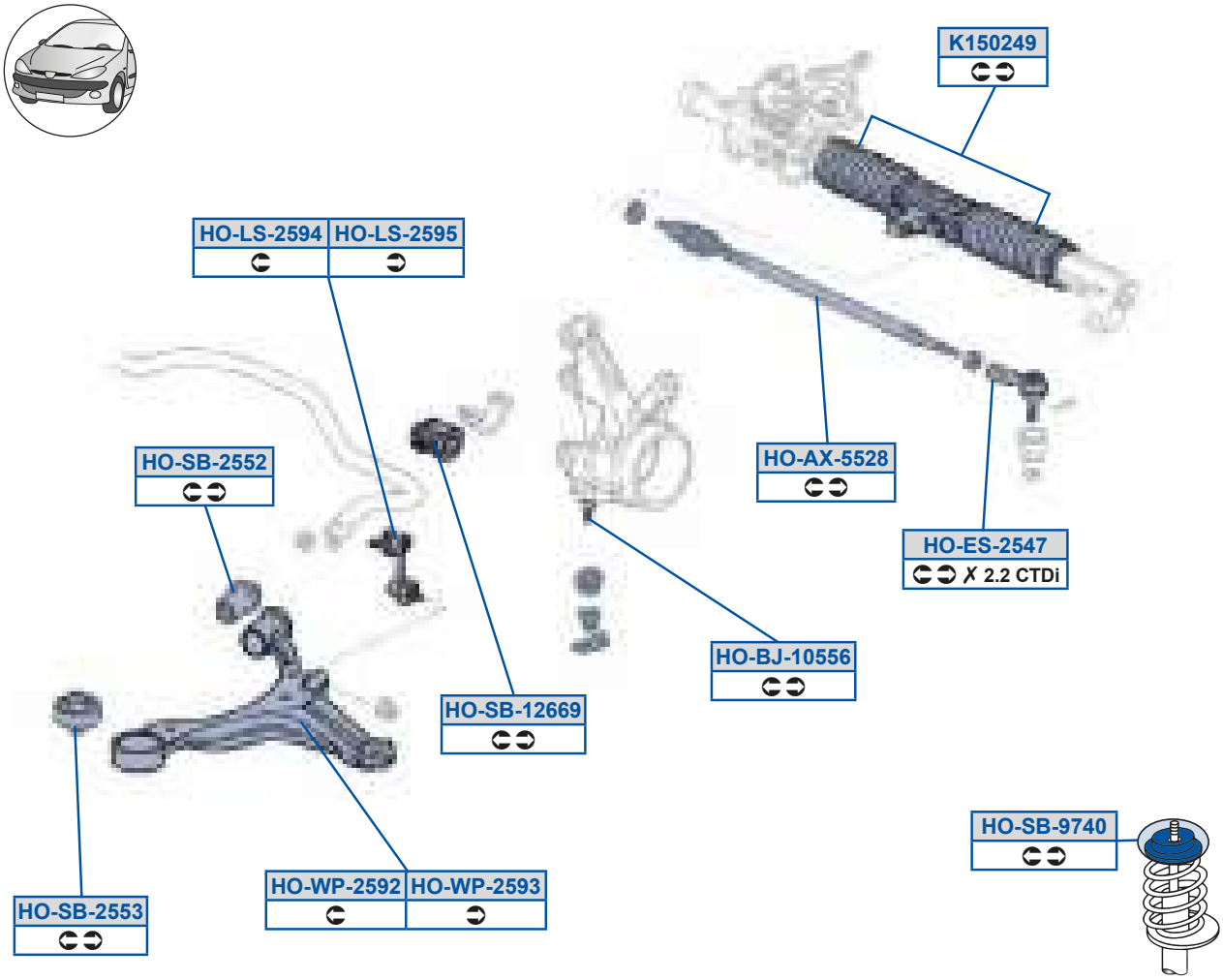
K150249
HO-LS-2594
HO-LS-2595
HO-SB-2552
HO-AX-5528
HO-ES-2547
✗ 2.2 CTDi
HO-BJ-10556
HO-SB-12669
HO-SB-9740
HO-SB-2553
HO-WP-2592
HO-WP-2593

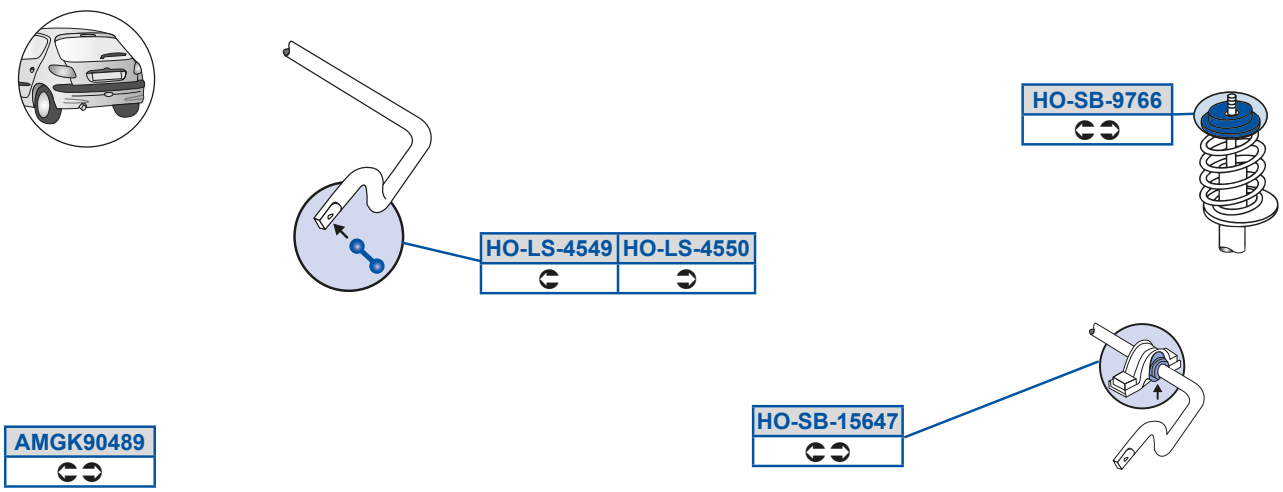
HO-SB-9766
HO-LS-4549
HO-LS-4550
HO-SB-15647
AMGK90489

MOOG

O[UYG8BFG
C9AG7oQ 0883C9B77oQ 088

V_ 5dP59>DDG
C8A7DoEP78B

Y9C8>BG
CACABoGO77A3CACADoGO77A

V_ 5Oi 5CC>F
CAC98oGO77A

V_ 5dP59CDBE
C9A7DoGO77C

V_ 5PX598CCD
C8997oGOGF9

V_ 5dP5>CC>
C8AG9oCO77B

V_ 5Sd5>CBE
CACB8oCO77A

V_ 5dP5>CCA
C8AG8oCO79B

V_ 5Zd5>CGB
C8A98oCO77A

V_ 5dP5GEB8
C8E9DoCO7793C8E9DoCO77B

V_ 5Zd5>CGC
C8A97oCO77A

V_ 5dP5GEDD
C8D98oFBO783C8E9Fon777A

V_ 5Zd5BCBG
C9A98oGO77A

V_ 5h a5>CG>
C8AD7oGO7873C8AD7oGO87

V_ 5Zd5BCC8
C9A97oGO77A

V_ 5h a5>CGA
C8AC7oGO7873C8AC7oGO87

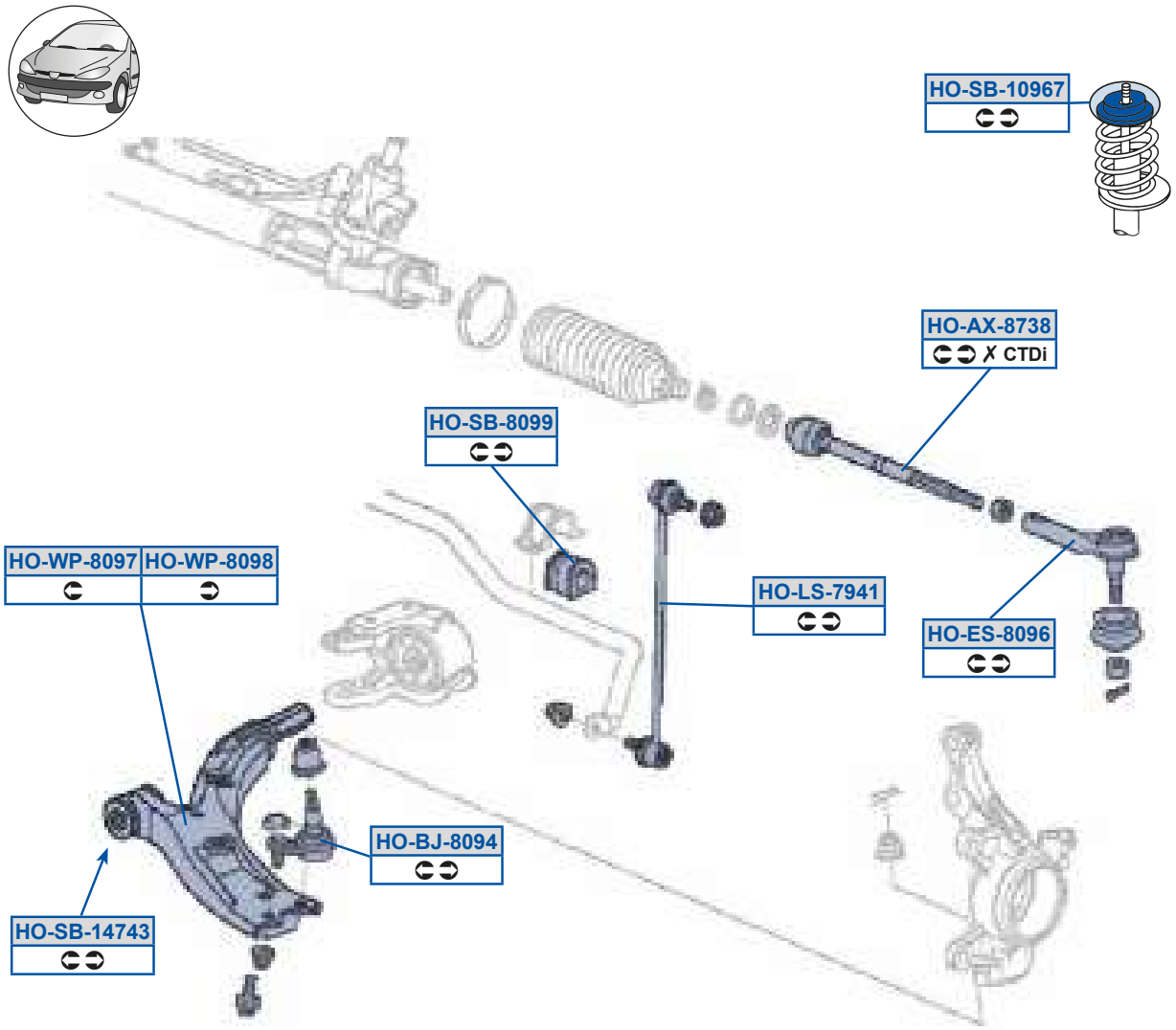
HO-SB-10967
HO-AX-8738
✗ CTDi
HO-SB-8099
HO-WP-8097
HO-WP-8098
HO-LS-7941
HO-ES-8096
HO-BJ-8094
HO-SB-14743

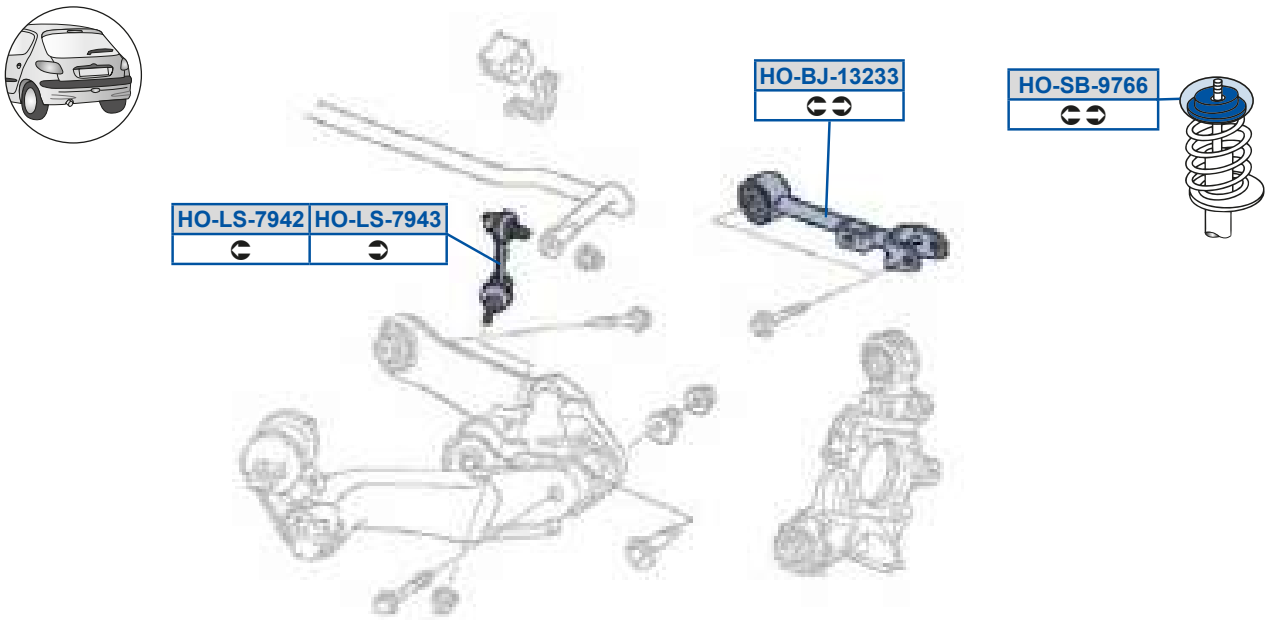
HO-BJ-13233
HO-SB-9766
HO-LS-7942
HO-LS-7943

MOOG

V_5Oi 5FEAF
CA787o QU783CA787o QU79

V_5dP5F8GG
C8A7Do 0078

V_5PX5F8GB
C8997ot Y078

V_5dP5GEDD
C8D98oFB0783C8E9Fon777A

V_5Sd5F8GD
CACB7oEo77A3CACB7o 0078

V_5eQ59A>AA
C9AG7o 0077

V_5Zd5EGB9
C8A97ot Y078

V_5h a5F8GE
C8AD7o 0S773C8AD7o 0S78

V_5Zd5EGB>
C9A98o 0078

V_5h a5F8GF
C8AC7o 0S78

V_5Zd5EGBA
C9A97o 0078

V_5dP598GDE
C8G974o 04078

V_5dP59BEBA
C8AC7o 0S78 /40

Qc5g Wy Qc S1	8979;	Qc5g Wy Qc [r1	8979;

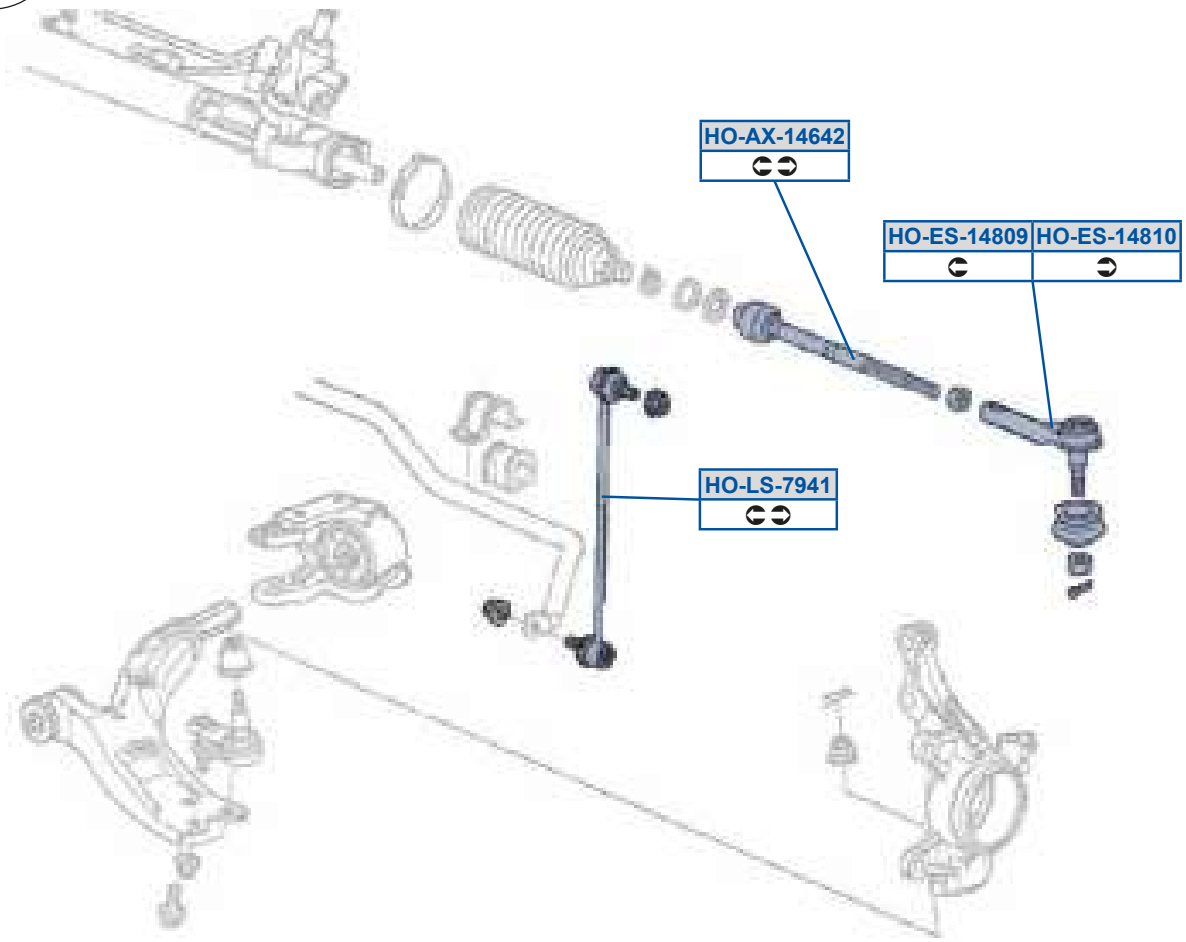

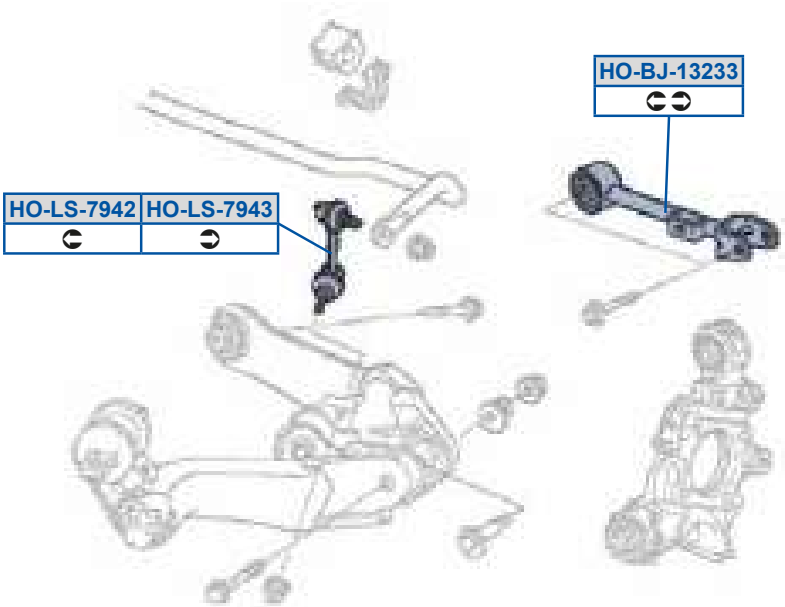

MOOG

V_5Oi59BDB>
CA787t70078

V_5Sd59BF8G
CACD7t8US78

V_5Sd59BF98
CACB7t8US78

V_5Zd5EGB9
C8A97ot Y078

V_5Zd5EGB>
C9A98o 0078

V_5Zd5EGBA
C9A97o 0078

V_5eQ59A>AA
C9AG7o 0077

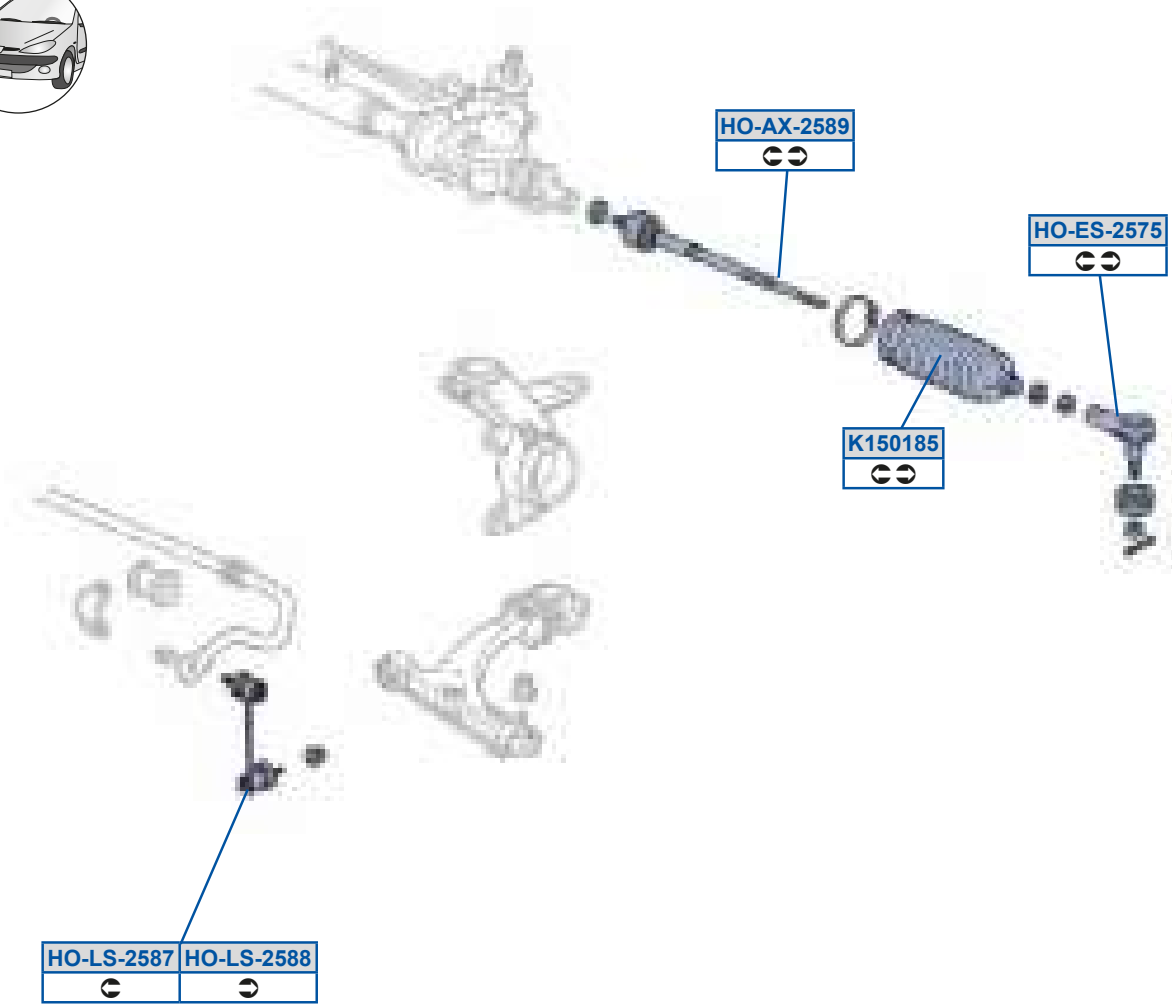
HO-AX-2589
HO-ES-2575
K150185
HO-LS-2587
HO-LS-2588

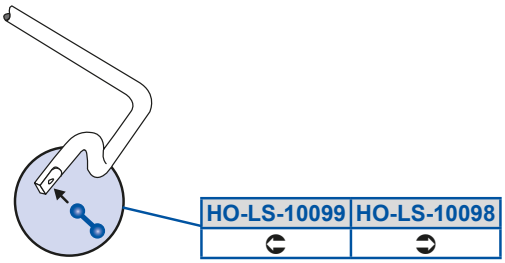
HO-LS-10099
HO-LS-10098

V_5Oi 5>CFG
CA787o9VX783CA787o9VX79

V_5Sd5>CEC
CACB7o Ft78

V_5Zd5988GF
C9A97o9V77A

V_5Zd5988GG
C9A98o9V77A

V_5Zd5>CFE
C8A98o9V77A

V_5Zd5>CFF
C8A97o9V77A

Y9C89FC
CACABo9VX783CACACo9VX78

V_] RO

XOI I WOUR1	8A78; 9; 78F	XOI I WOURr 4USA4US; 1	9878A 9; 78F
XOI I dt	8C78A 8E78F		

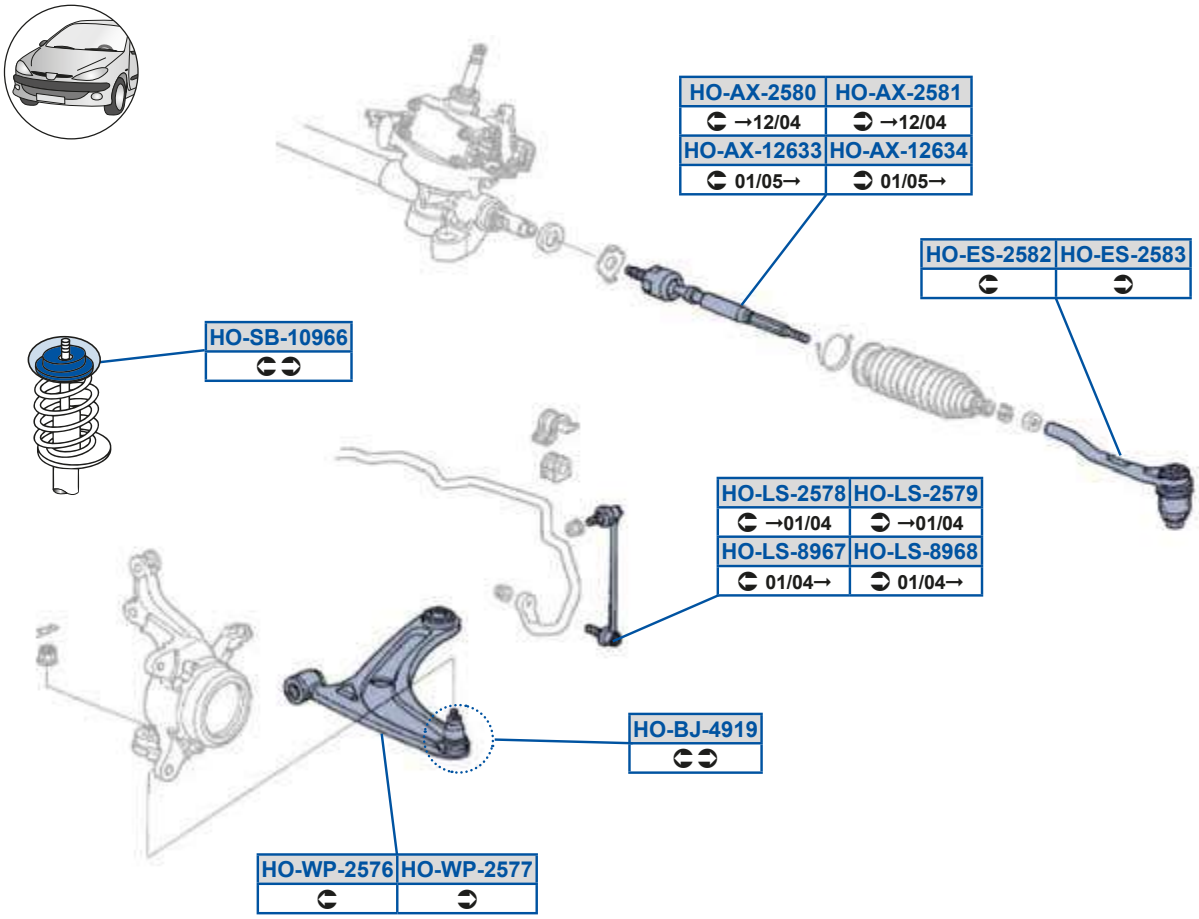

MOOG

V_5Oi 59>DAA
CA788oSZ77A

V_5Oi 59>DAB
CA787oSZ77A

V_5Oi 5>CF8
CA788oOOX78

V_5Oi 5>CF9
CA787oOOX78

V_5PX5BG9G
C8997o0078A3C8997oOOS78

V_5Sd5>CF>
CACD7o0077A3CACD7o0Ra 78

V_5Sd5>CFA
CACB7o0077A3CACB7o0Ra 78

V_5Zd5>CEF
C8A98o0077A

V_5Zd5>CEG
C8A97o0077A

V_5Zd5FGDE
C8A98oOOX78

V_5Zd5FGDF
C8A97oOOX78

V_5dP598GDD
C8E9D4oTO 77C

V_5h a5>CED
C8A7DoOOS783C8AD7oOOS78

V_5h a5>CEE
C8AC7oOOS783C8AC7oOOS88

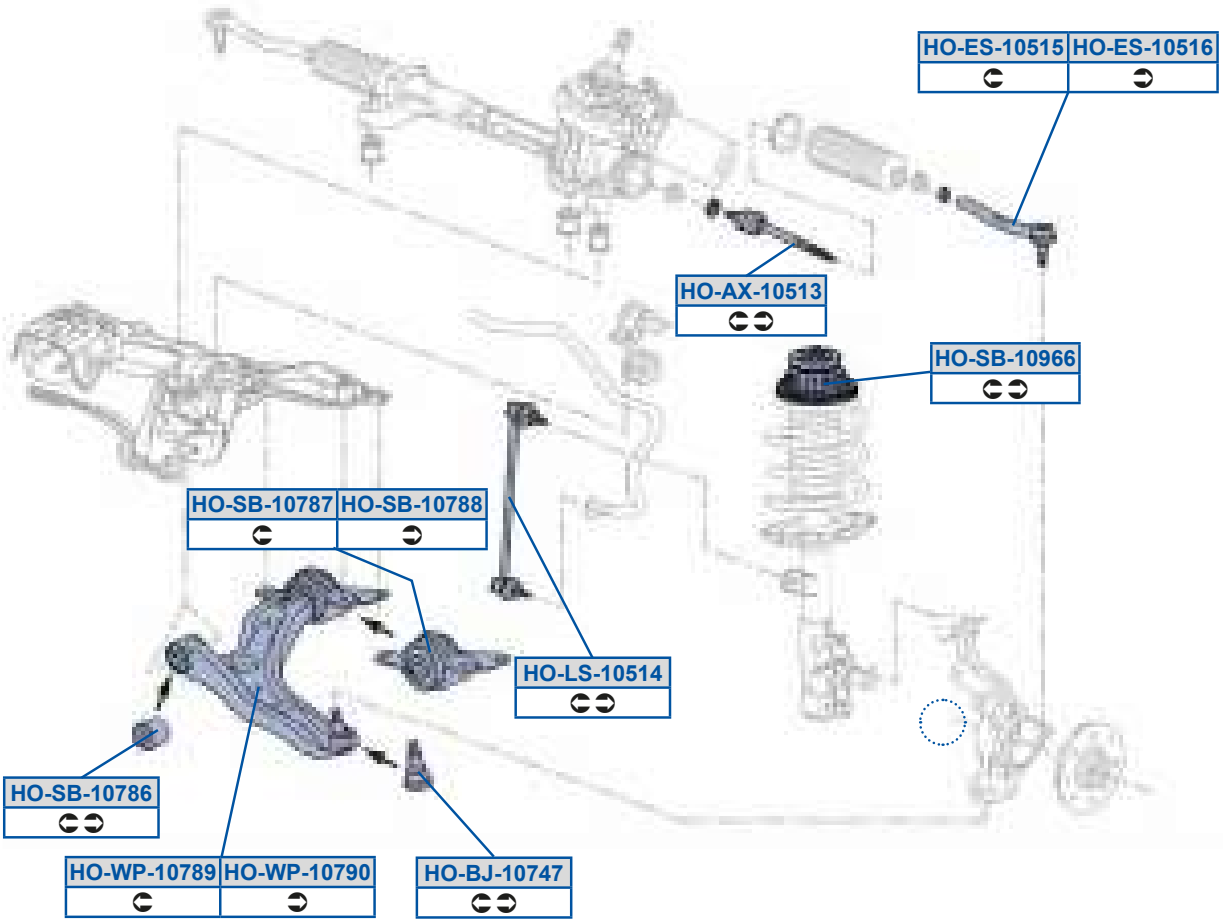
HO-ES-10515
HO-ES-10516
HO-AX-10513
HO-SB-10966
HO-SB-10787
HO-SB-10788
HO-LS-10514
HO-SB-10786
HO-WP-10789
HO-WP-10790
HO-BJ-10747

V_5Oi598C9A
CA787t T777A

V_5dP598GDD
C8E9D4oTO 77C

V_5PX598EBE
C8AC7t T77A7 /40

V_5h a598EFG
C8AD7t T77A7

V_5Sd598C9C
CACD7t T777A

V_5h a598EG8
C8AC7t T77A7

V_5Sd598C9D
CACB7t T777A

V_5Zd598C9B
C8A97t T777A

V_5dP598EFD
C8AC7t T77A7 /40

V_5dP598EFE
C8AC7t T77A7 /40

V_5dP598EFF
C8AC7t T77A7 /40

Vj f] ROW

OQQS] e Wõi 5A1	987GB	89788	OQQS] e dt	Oi 5A1		987GB	89788
Si QSZ Wõi 5A17a_] k Wõi 5A1	987GB	89788	Si QSZ dt	Oi 5A17a_] k dt	Oi 5A1	987GB	89788

Ot t v W5L 897>8881li 5An

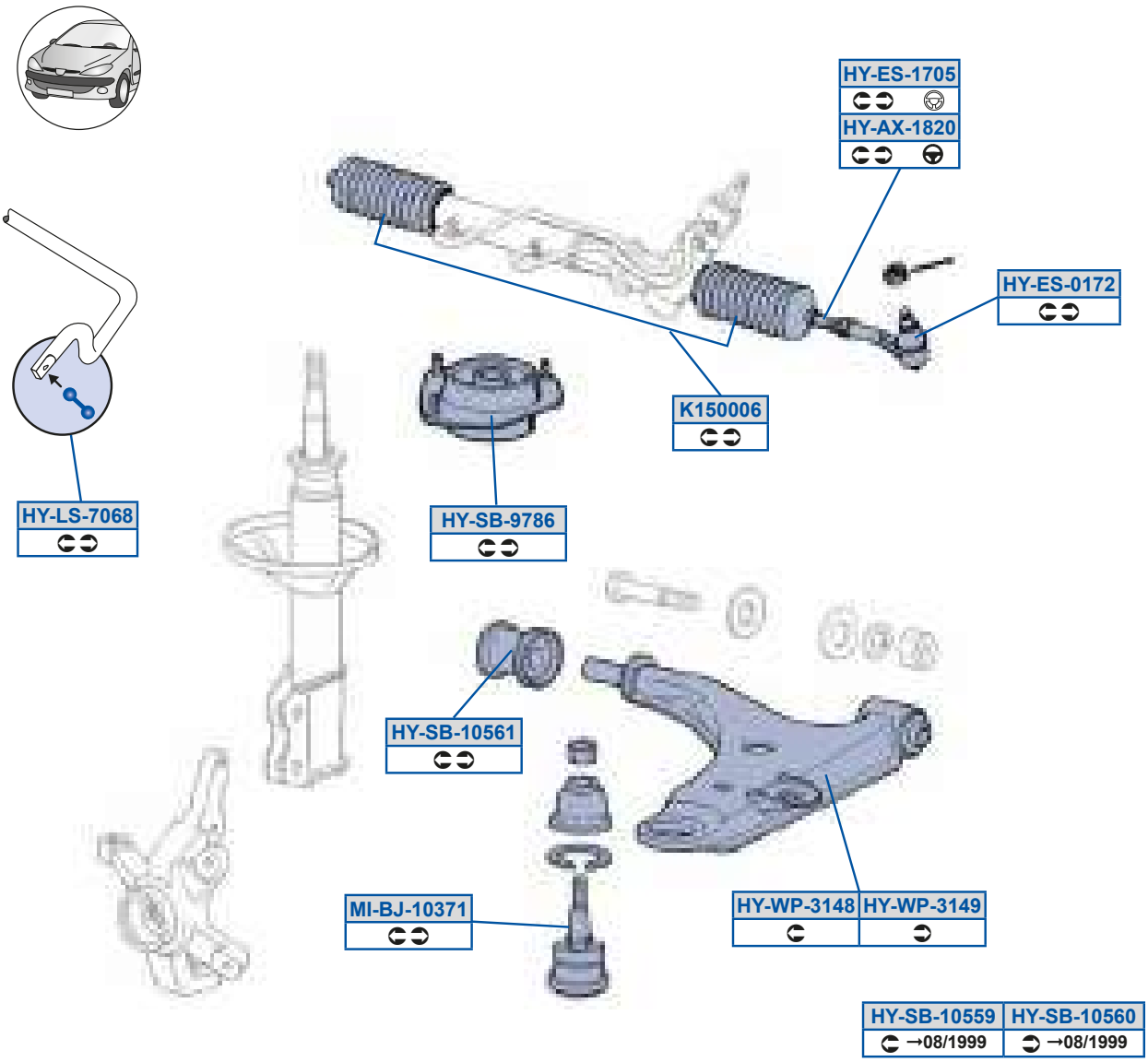

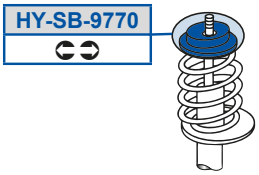

Vj f] ROW Ot t v W5L 897>8881li 5An

Vj 5Oi 59F>8
CDCB9BA7783CEEA79B777

Vj 5dP5GEFD
CBD8899777

Vj 5Sd589E>
CDF97997773CDF979C777

Vj 5h a5A9BF
CBC77997773CBC7799877

Vj 5Sd59E8C
CDCB7997773CDCB79B777

Vj 5h a5A9BG
CBC78997773CBC7899877

Vj 5Zd5E8DF
CBF9C99777

Y9C888D
CACABDAB7773CACABDAB797

Vj 5dP598CCG
CBCCC997773CBCCC99877

[V5PX598AE9
CBC7A990773CBC7A9C077

Vj 5dP598CD8
CBCCD997773CBCCD99877

Vj 5dP598CD9
CBCC8797773CBCC899777

Vj 5dP5GEE8
BFDGAFEE7A3CCA8899777

Vj f] ROW

OQQS] e WŒZQ1	8G7GG 9978C	OQQS] e WŒt ŒZQ1	8G7GG 9; 78D
OQQS] e dt ŒZQ1	8G7GG 9978C	Si QSZ WŒZQ1	89788 9978C

Ot t v WŒ897>888 5L1IZQn

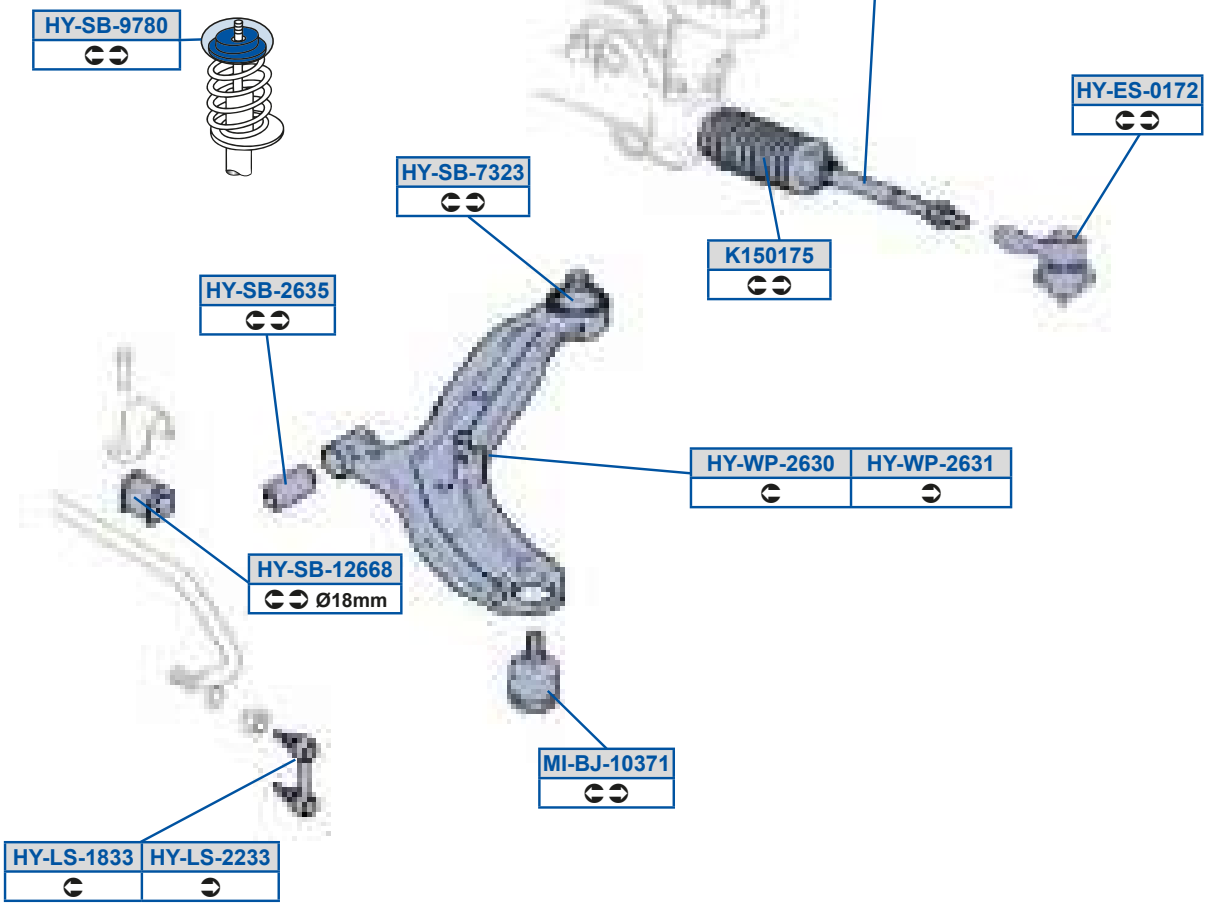

Vj f] ROW

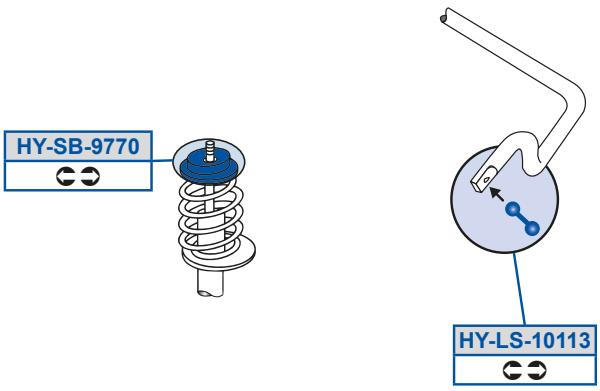

Vj 5Oi 58GDG
CDBC79B7783CDCB79C777

Vj 5dP5>DAC
CBCC88Q7773CBCC89C777

Vj 5Oi 5>D9C
CDCB79C7773CEECC9C777

Vj 5dP5EA>A
CBCCC9C777

Vj 5Sd589E>
CDF97997773CDF979C777

Vj 5dP5GEE8
BFDGAFEE7A3CCA8899777

Vj 5Zd59899A
CBFA79C7773CCFA79C777

Vj 5dP5GEF8
CBD879C777

Vj 5Zd59FAA
CBFA78E7873CBFA79C787

Vj 5h a5>DA8
CBC779C777

Vj 5Zd5>>AA
CBFA78E7973CBFA79C797

Vj 5h a5>DA9
CBC789C777

Vj 5dP598EC>
CCC8A99C77

Y9C89EC
CDC9F9B777

Vj 5dP59>DDF
CBF8A9C777

[V5PX598AE9
CBC7A990773CBC7A9C077

Vj f] ROW Ot t v WW397>888 5L1IZQn

Vj f] ROW

OQQS] e WWQ[Q1	9978C 99798	OQQS] e WWdt q[Q1	9978C 99798
OQQS] e dt q[Q1	9978C 99798		

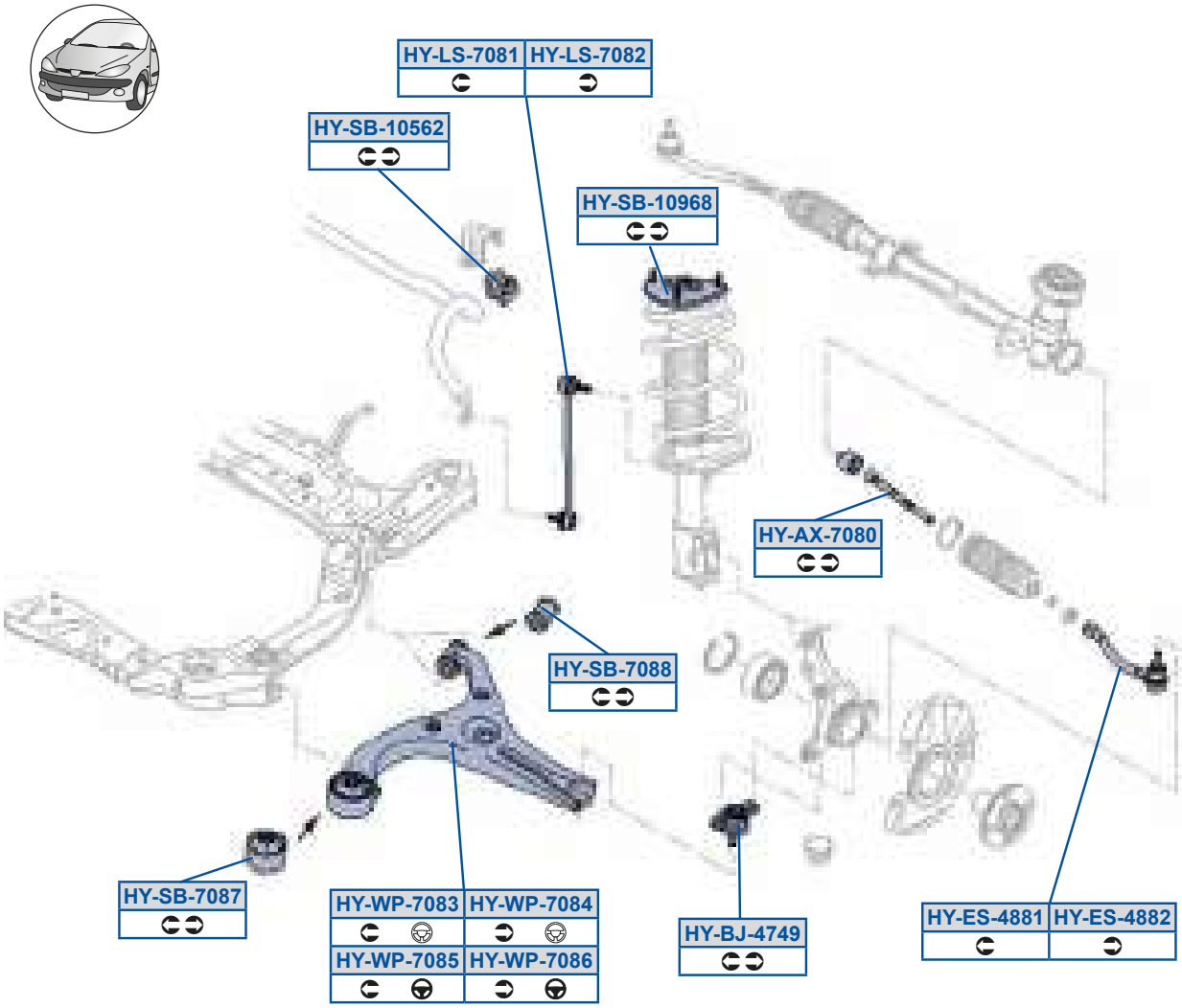

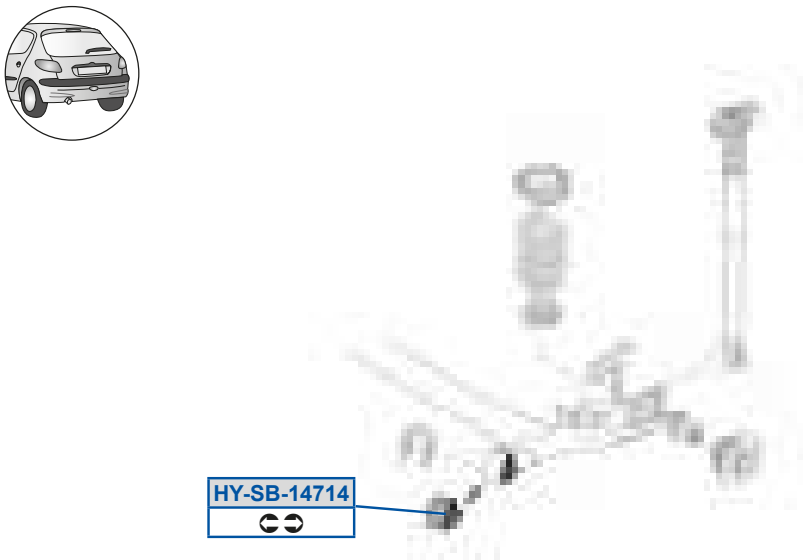

MOOG

Vj 5Oi 5E8F8
CEE9B8S777

Vj 5dP5E8FE
CBCFB8U777

Vj 5PX5BEBG
C8ED78U777

Vj 5dP5E8FF
CBCC88S777

Vj 5Sd5BFF9
CDF978S777

Vj 5h a5E8FA
CBC778S877

Vj 5Sd5BFF>
CDF978SG77

Vj 5h a5E8FB
CBC788S877

Vj 5Zd5E8F9
CBFA78S7773CBFA78S877

Vj 5h a5E8FC
CBC777X7773CBC778S777

Vj 5Zd5E8F>
CBFB78S7773CBFB78S877

Vj 5h a5E8FD
CBC787X7773CBC788S777

Vj 5dP598CD>
CBF898U877

Vj 5dP598GDF
CCA8848U777

Vj f] ROW

OQQS] e Wy 0c P1	99798	OQQS] e Wy dt 0c P1	8F798

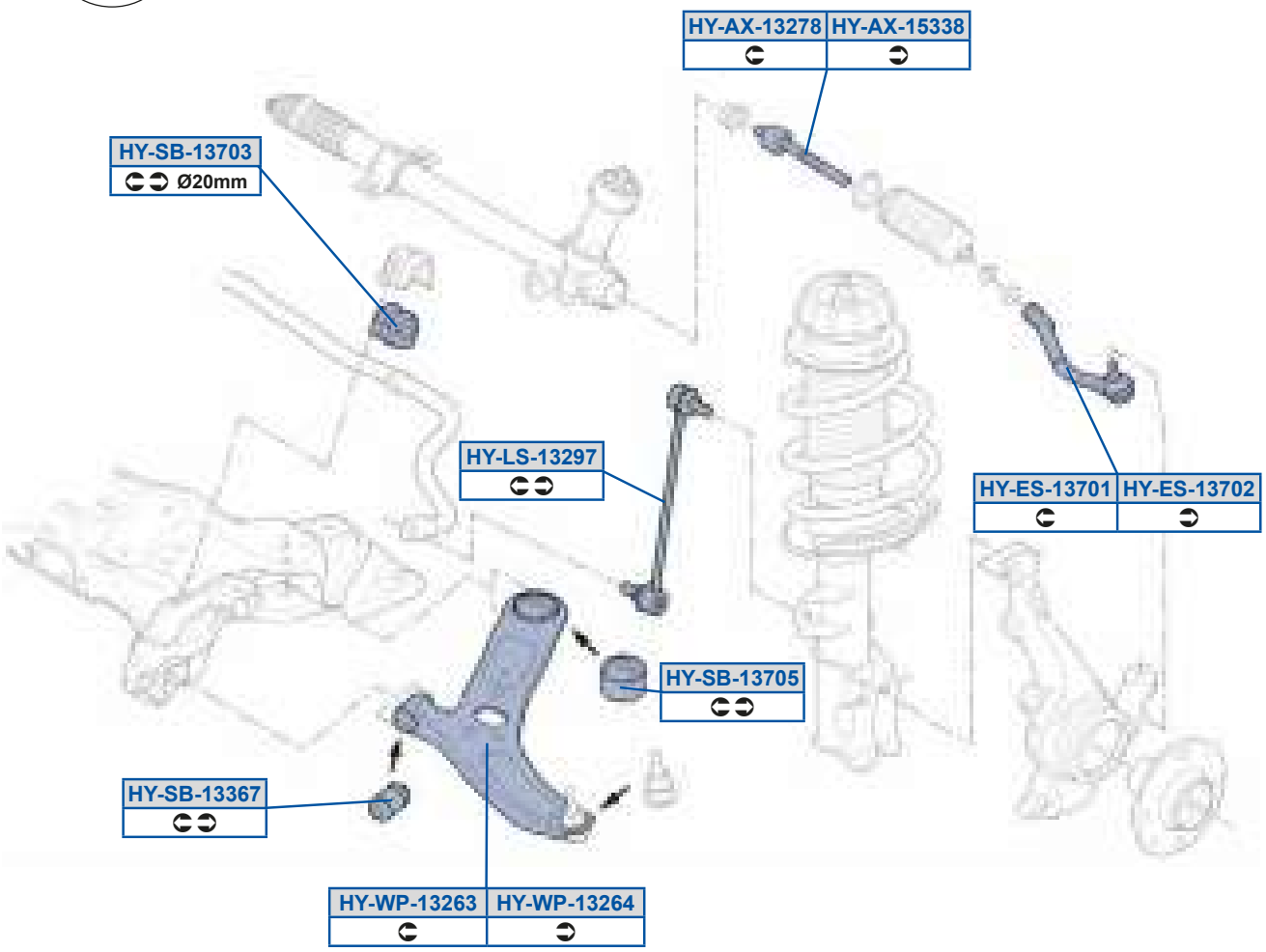

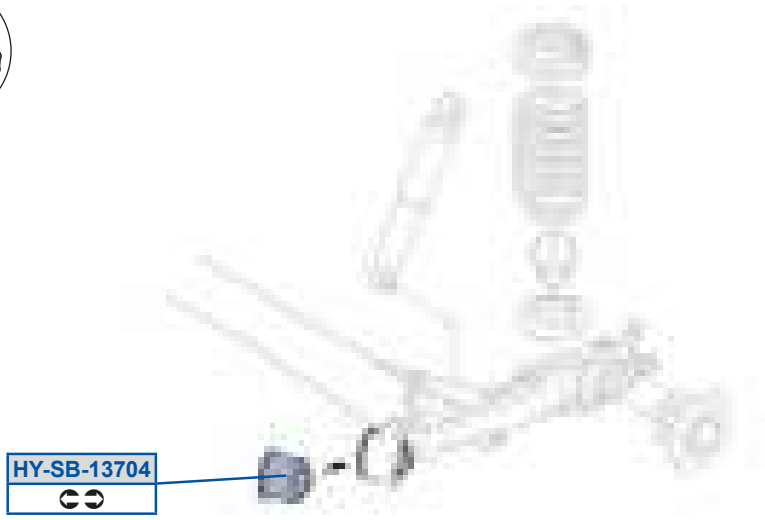

Vj 5Oi 59A>EF
CEE9BBZ777

Vj 5Oi 59CAAF
CEE9BBZ7G7

Vj 5Sd59AE89
CDF97BZ777

Vj 5Sd59AE8>
CDF97BZ7G7

Vj 5Zd59A>GE
CBFA77u7773CBFA7BZ777

Vj 5dP59AADE
CBCC8A 777

Vj 5dP59AE8A
CBF8AA 7773CBF8AA 778

Vj 5dP59AE8B
CC8D78n777

Vj 5dP59AE8C
CBCFBA 777

Vj 5h a59A>DA
CBC778n777

Vj 5h a59A>DB
CBC788n777

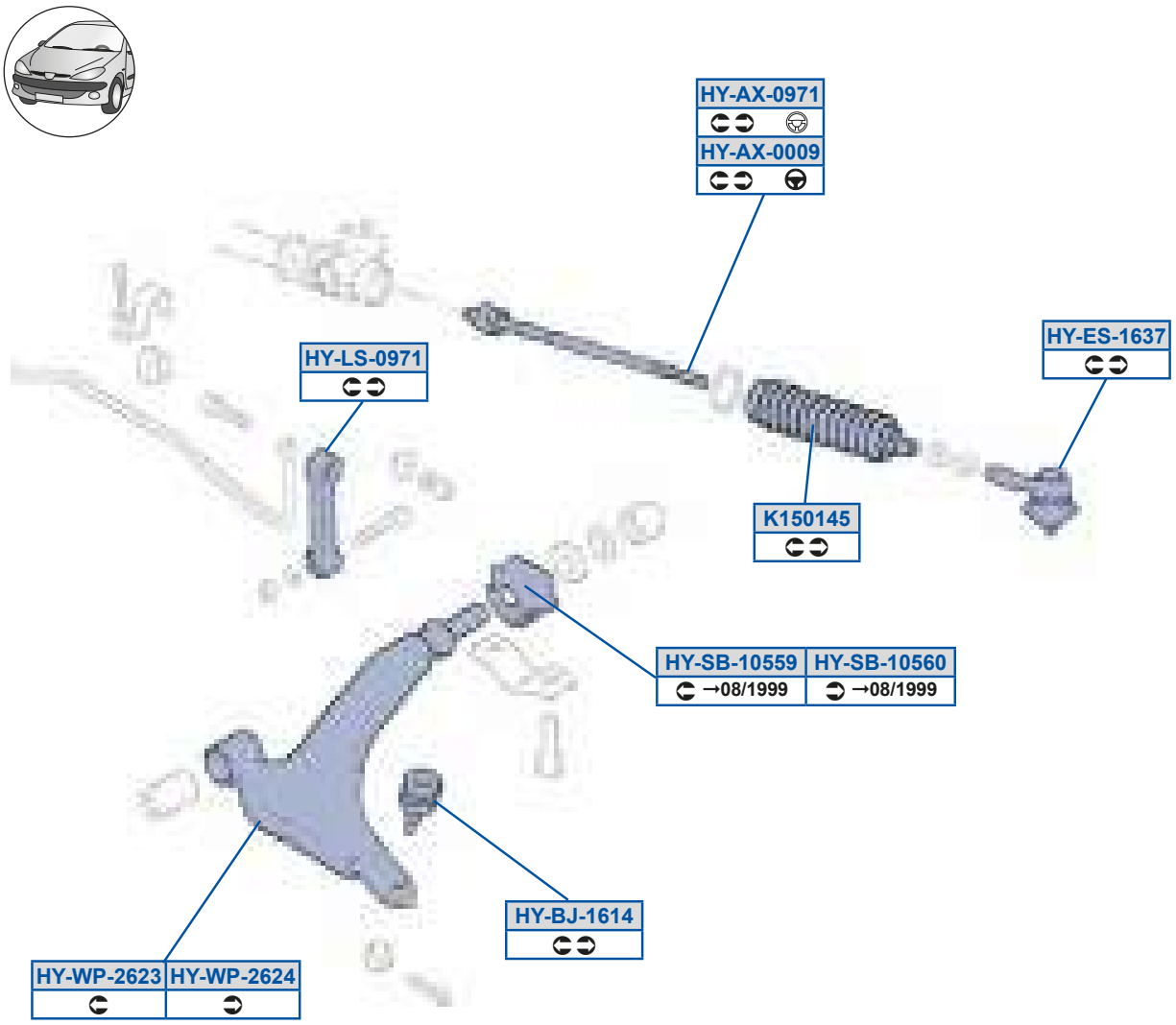
HY-AX-0971
HY-AX-0009
HY-ES-1637
HY-LS-0971
K150145
HY-SB-10559
→08/1999
HY-SB-10560
→08/1999
HY-BJ-1614
HY-WP-2623
HY-WP-2624

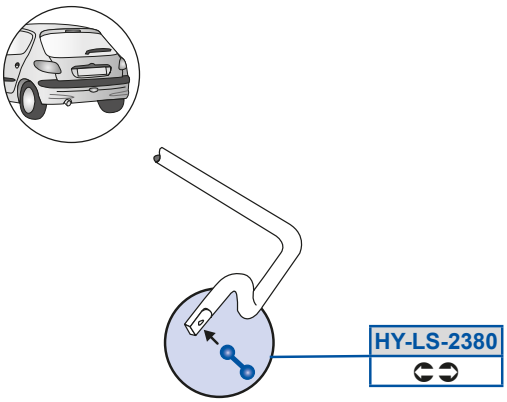
HY-LS-2380

Vj 5Oi 5888G
CEECC79777

Vj 5Oi 58GE9
CDCB779777

Vj 5PX59D9B
CBCA7797773CBCA7797C7

Vj 5Sd59DAE
CDF9779C773CDF979F777

Vj 5Zd58GE9
CBF9779777

Vj 5Zd5>AF8
CCCA79G7773CCCA79GC77

Vj 5dP598CCG
CBCCC997773CBCCC99877

Vj 5dP598CD8
CBCCD997773CBCCD99877

Vj 5h a5>D>A
CBC77797C73CBC77797C8

Vj 5h a5>D>B
CBC78797C73CBC78797C8

Y9C89BC

Vj f] ROW

Q_f aS Qc R1	8D7GD 8B78;		

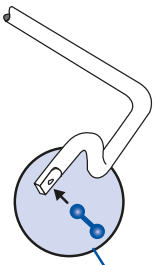

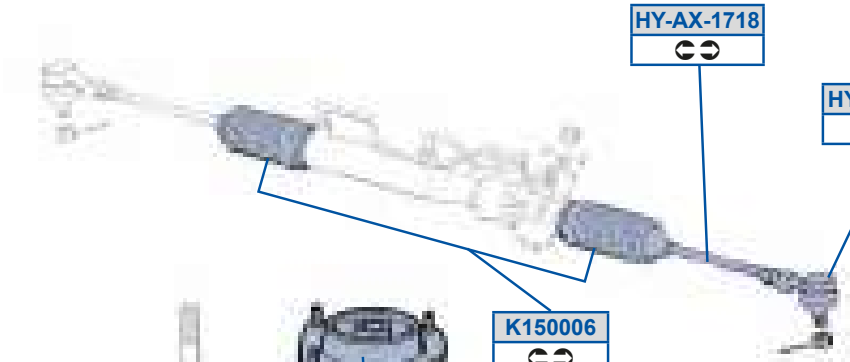

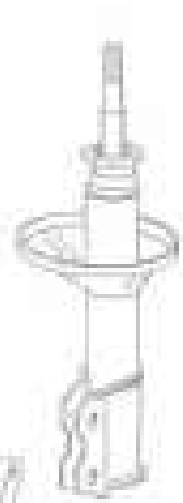

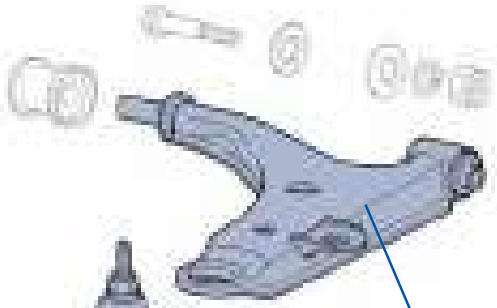

HY-AX-1718

HY-ES-0172

K150006

HY-SB-9772

HY-LS-1845

HY-WP-2621	HY-WP-2622

MI-BJ-10371

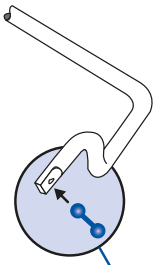

HY-SB-9774	HY-SB-9776

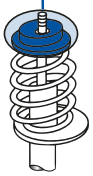

HY-LS-2380

Vj f] ROW

MOOG

Vj 5Oi 59E9F
CEEA79G7773CEEA79G778

Vj 5h a5>D>>
CBC789G7773CBC789GC77

Vj 5Sd589E>
CDF97997773CDF979C777

Y9C888D
CACABDAB7773CACABDAB797

Vj 5Zd59FBC
CBFA79G7773CBFA79GC77

[V8PX598AE9
CBC7A99O773CBC7A9CO77

Vj 5Zd5>AF8
CCCA79G7773CCCA79GC77

Vj 5dP5GEE>
CBD879G7773CBD879R777

Vj 5dP5GEEB
CCA879G777

Vj 5dP5GEED
CCA979G777

Vj 5h a5>D>9
CBC779G7773CBC779GC77

Vj f] ROW

Q_f aS 0UY1	89789 8F78G		

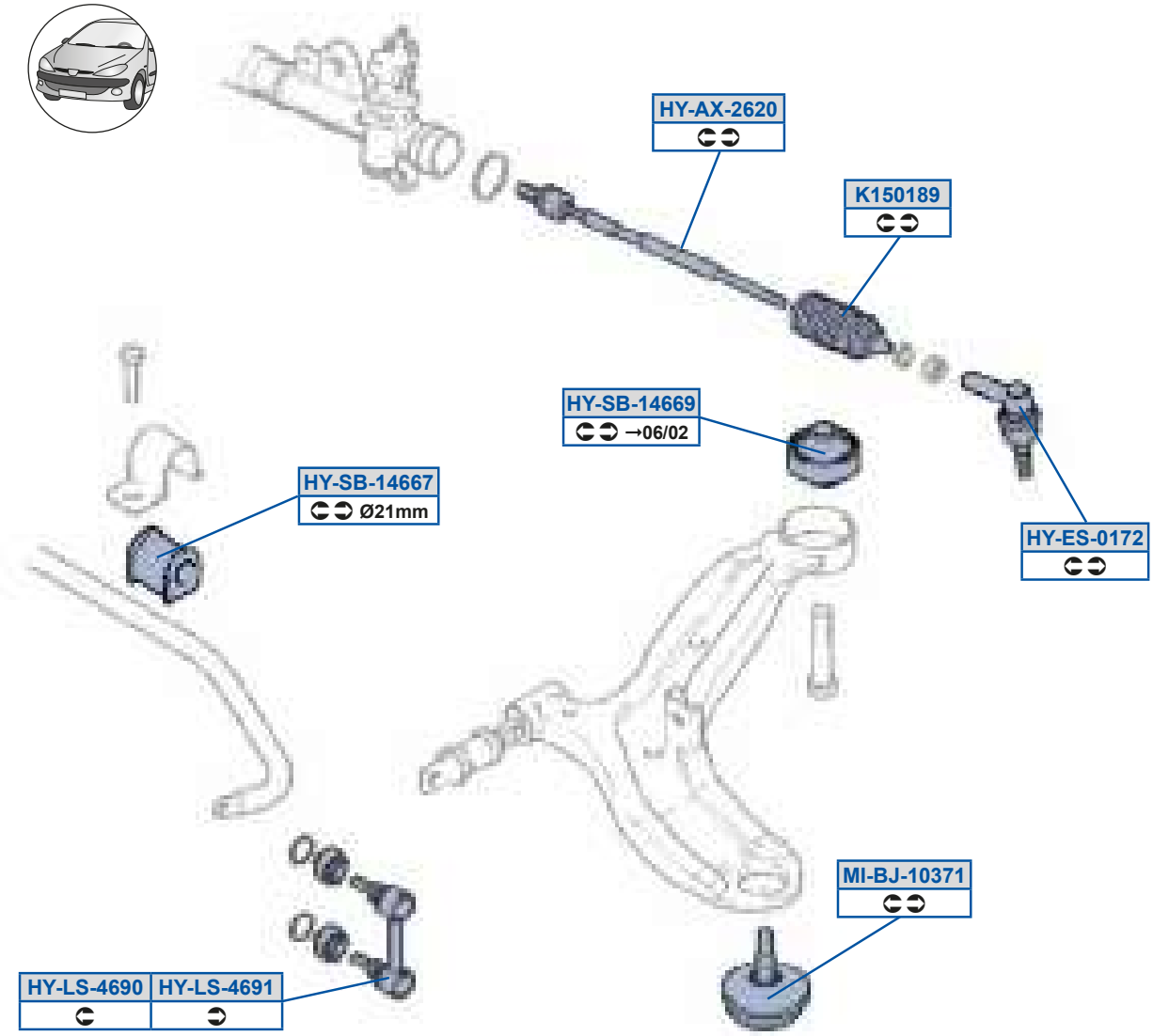

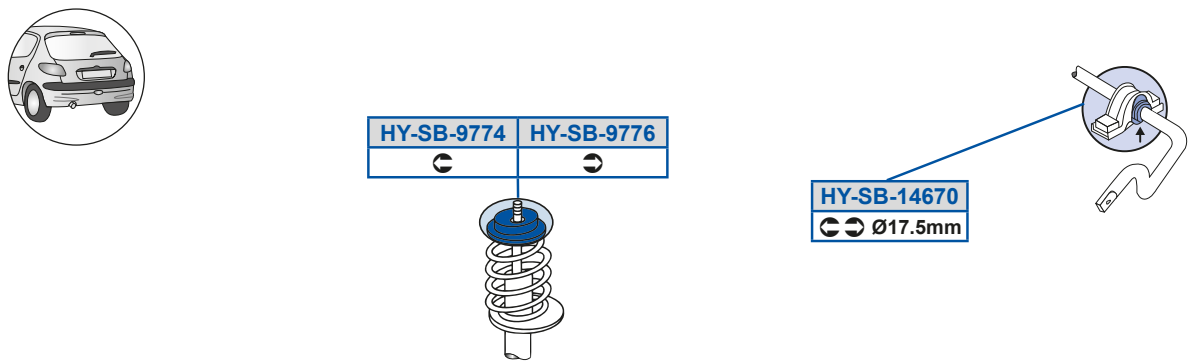

MOOG

Vj 5Oi 5>D>8
CE99B9R7973CEE9B9R777

Vj 5dP5GEED
CCA979G777

Vj 5Sd589E>
CDF97997773CDF979C777

Y9C89FG
CEEB79R777

Vj 5Zd5BDG8
CBFA79Q777

[W8PX598AE9
CBC7A990773CBC7A9C077

Vj 5Zd5BDG9
CBFB79Q777

Vj 5dP59BDDE
CBF8A9Q8773CBF8A9R778

Vj 5dP59BDDG
CBCFBAF7773CBCFBAF787

Vj 5dP59BDE8
CCC8A9Q887

Vj 5dP5GEEB
CCA879G777

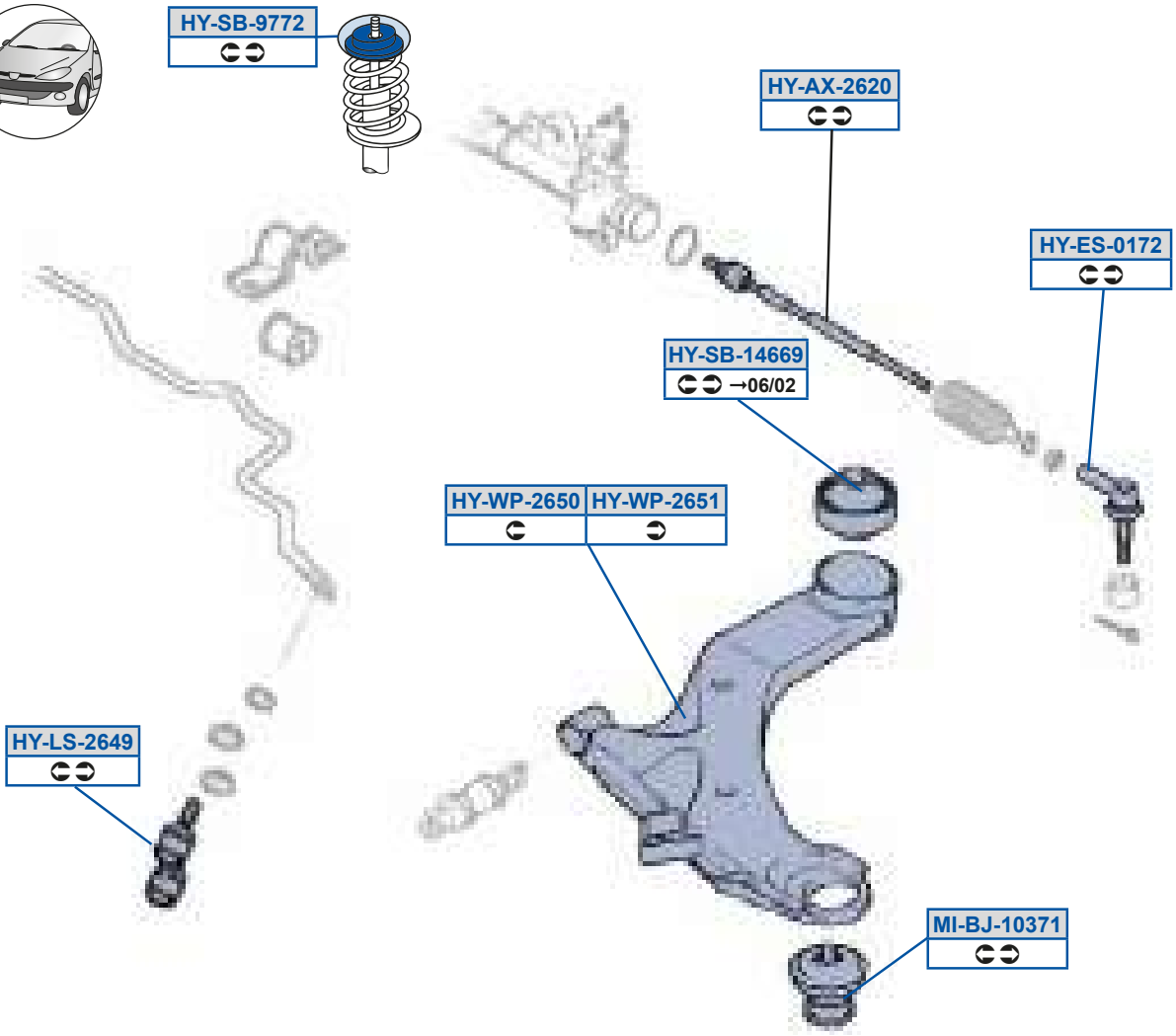
HY-SB-9772
HY-AX-2620
HY-ES-0172
HY-SB-14669
→06/02
HY-WP-2650
HY-WP-2651
HY-LS-2649
MI-BJ-10371

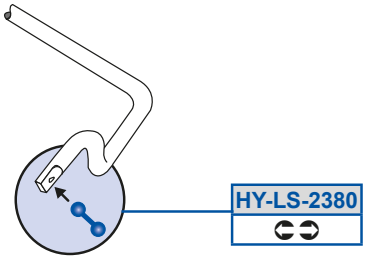
HY-LS-2380

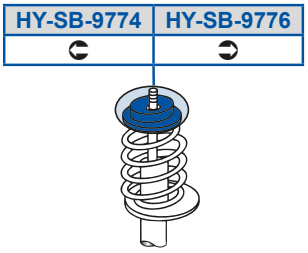
HY-SB-9774
HY-SB-9776

Vj 5Oi 5>D>8
CE99B9R7973CEE9B9R777

Vj 5h a5>DC8
CBC779R7773CBC779R778

Vj 5Sd589E>
CDF97997773CDF979C777

Vj 5h a5>DC9
CBC789R7773CBC789R778

Vj 5Zd5>AF8
CCCA79G7773CCCA79GC77

[V6PX598AE9
CBC7A990773CBC7A9C077

Vj 5Zd5>DBG
CBFA7AB7773CBFA7ABC77

Vj 5dP59BDDG
CBCFBAF7773CBCFBAF787

Vj 5dP5GEE>
CBD879G7773CBD879R777

Vj 5dP5GEEB
CCA879G777

Vj 5dP5GEED
CCA979G777

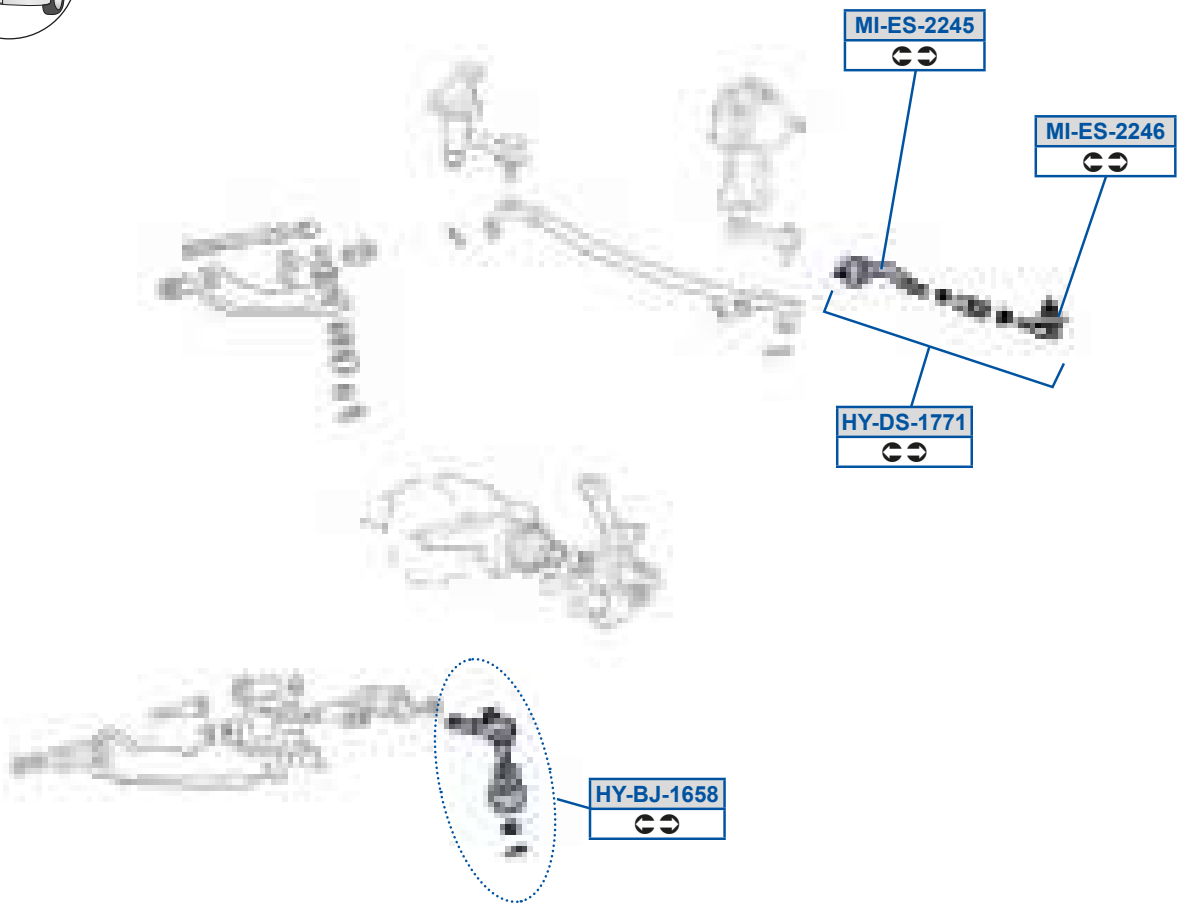
MI-ES-2245
MI-ES-2246
HY-DS-1771
HY-BJ-1658

Vj 5PX59DCF
VP989877

Vj 5Rd59EE9
VPCDF8773a P9BAB9CO

[V5Sd5>>BC
VPCDF8873a P9B897D

[V5Sd5>>BD
VPCDF897

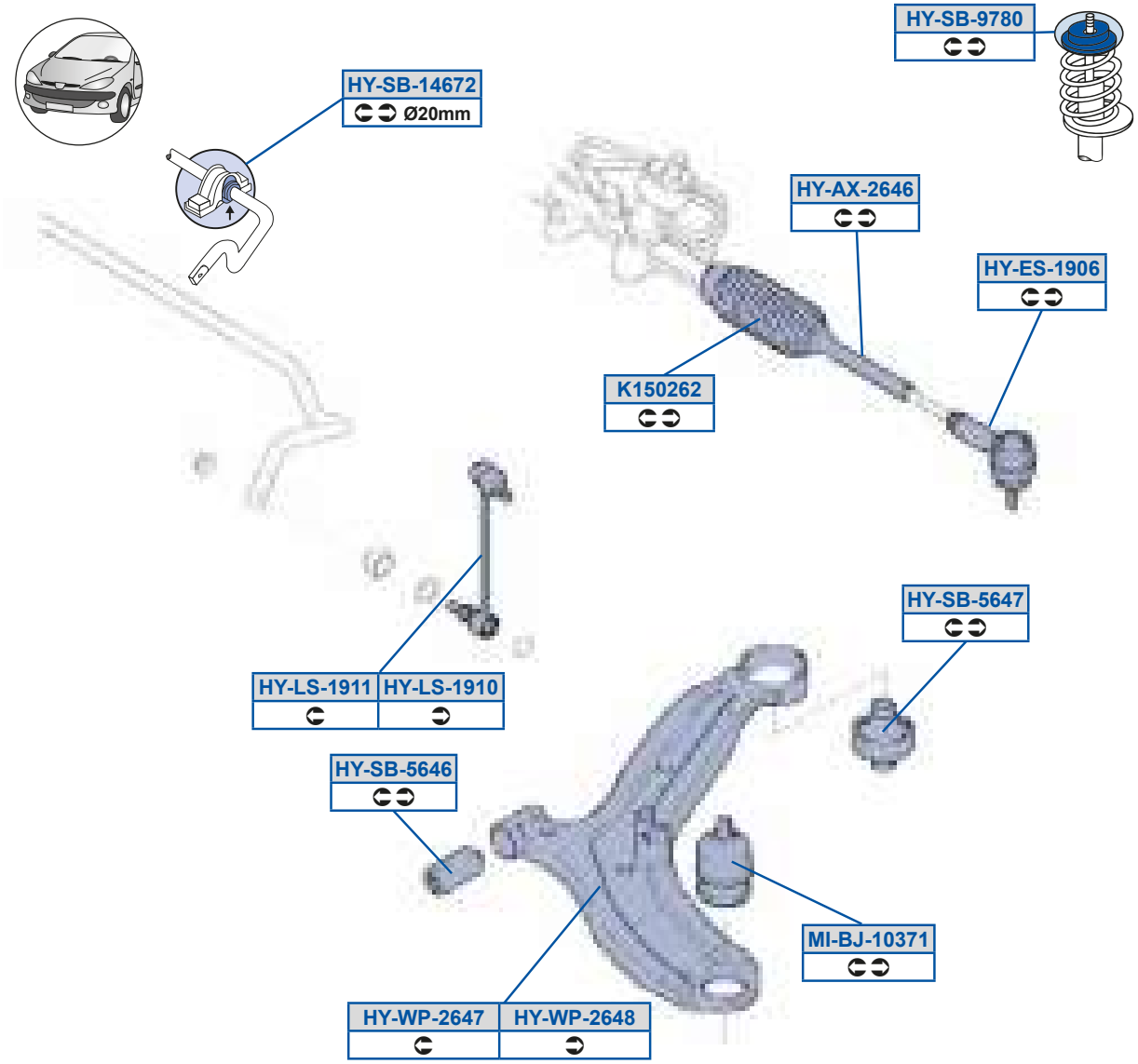
HY-SB-9780
HY-SB-14672
Ø20mm
HY-AX-2646
HY-ES-1906
K150262
HY-SB-5647
HY-LS-1911
HY-LS-1910
HY-SB-5646
MI-BJ-10371
HY-WP-2647
HY-WP-2648

Vj 5Oi 5>DBD
CEECC8Q777

Vj 5Sd59G8D
CDF97AP777

Vj 5Zd59G98
CBFB78Q7773CBFB78Q877

Vj 5Zd59G99
CBFA78Q7773CBFA78Q877

Vj 5dP59BDE>
CBF898Q7773CBF898QC77

Vj 5dP5CDBD
CBC788Q777 /40

Vj 5dP5CDBE
CBC788Q777 /40

Vj 5dP5GEF8
CBD879C777

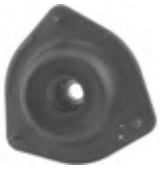

Vj 5h a5>DBE
CBC778Q7773CBC778Q787

Vj 5h a5>DBF
CBC788Q7773CBC788Q787

Y9C8>D>
CEE9F8E777

[V8PX598AE9
CBC7A99O773CBC7A9CO77

Vj f] ROW

V59 P	987GE 9; 78E	V59 a t y 7QÉt é	8D788 9878C
deOcSi 0V91	8D7GE		

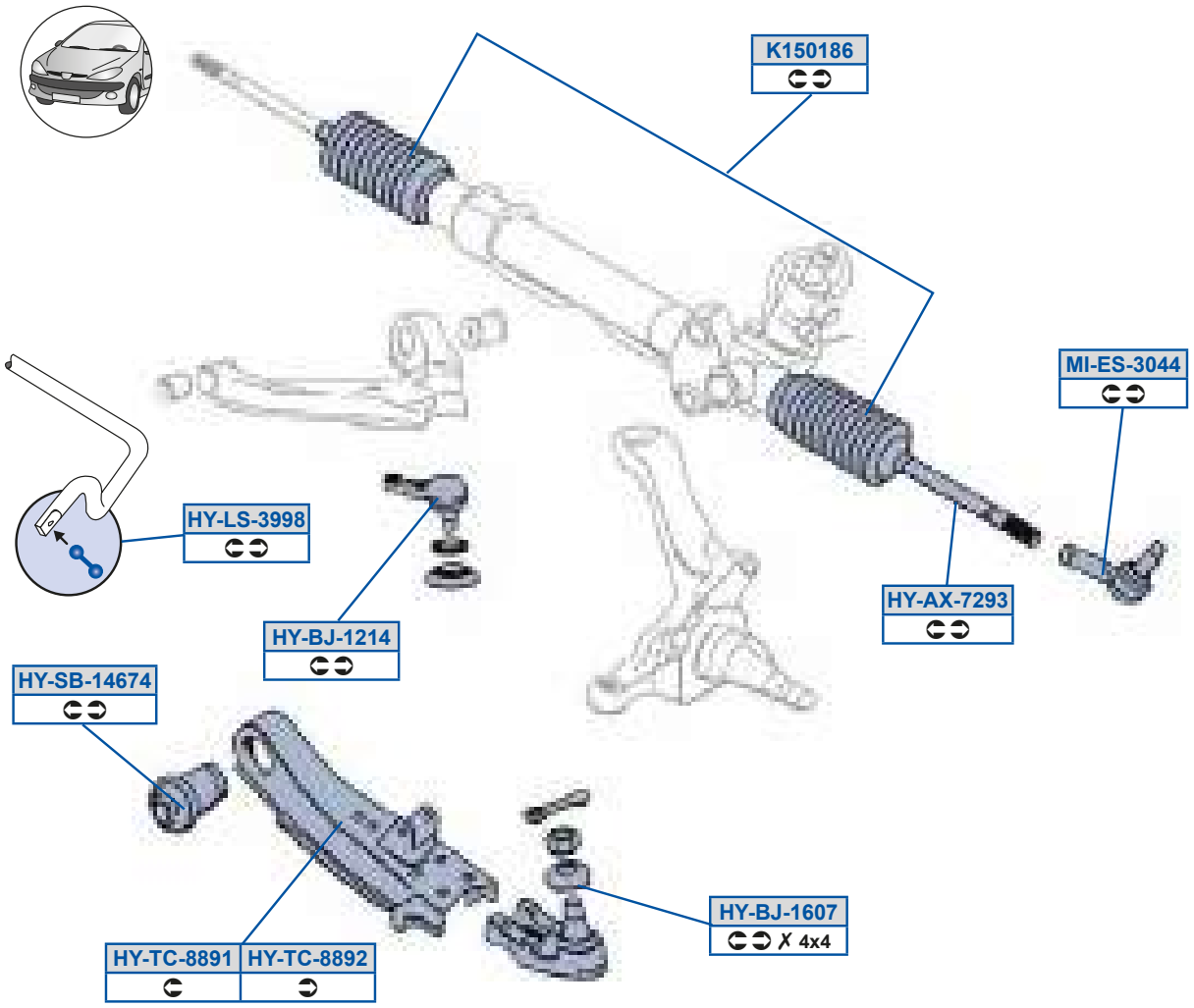

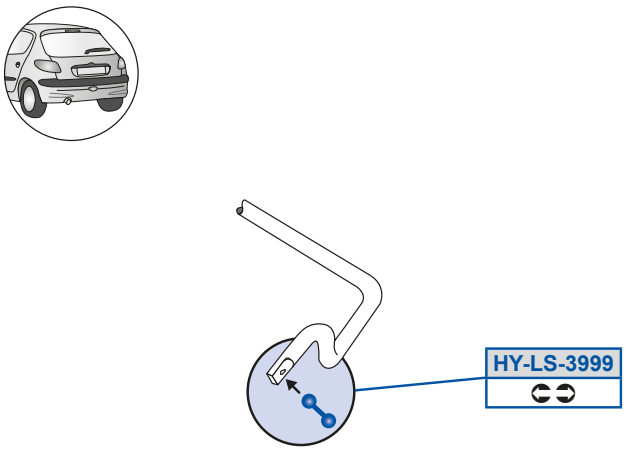

Vj 5Oi 5E>GA
CEE9GB0777

Vj 5PX59>9B
CBB8EBA0773CBB8EBE777

Vj 5PX59D8E
CBCA7B07773CBCA7B0077

Vj 5Zd5AGGF
CBFA7B07773CBFA7B0779

Vj 5Zd5AGGG
CCCA7B07773CCCA7B0778

Vj 5dP59BDEB
CBC99BP7773CBC99BP787

Vj 5eQ5FFG9
CBC77B07773CBC77B0D77

Vj 5eQ5FFG>
CBC78B07773CBC78B0D77

Y9C89FD
CEEEBB0777

[W5Sd5A8BB
CDF97B07773CDF97B0D77

Vj f] ROW

V59 Qt ' Œb1	8; 78F	deOcSi 0V91	8D7GE
V59 e t x Œb1	8; 78F		

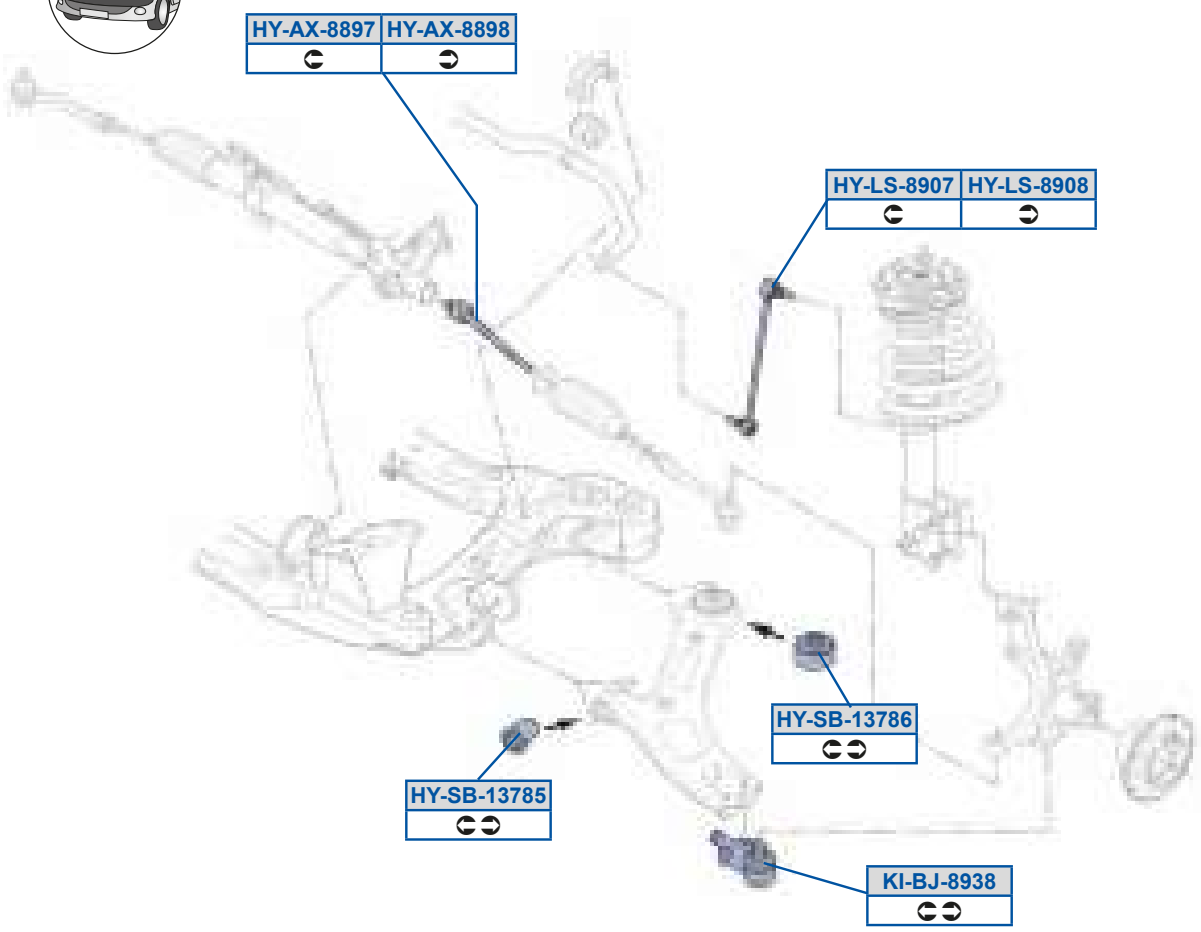

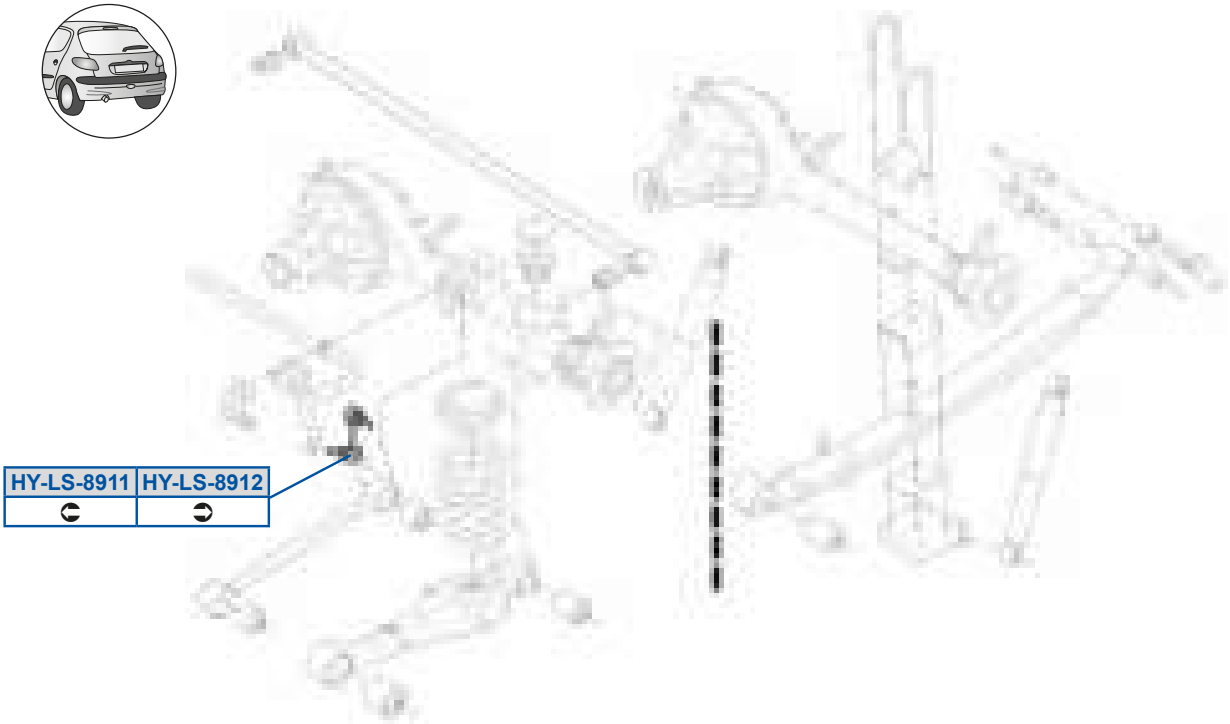

MOOG

Vj 5Oi 5FFGE
CEE9BBV777

Vj 5Oi 5FFGF
CEE9BBV877

Vj 5Zd5FG8E
CBFA7BV7773CBFA7BV977

Vj 5Zd5FG8F
CBFB7BV7773CBFB7BV977

Vj 5Zd5FG99
CCCA7BV777

Vj 5Zd5FG9>
CCCB7BV777

Vj 5dP59AEFC
CBC77BV777 /40

Vj 5dP59AEFD
CBC77BV777 /40

YW8PX5FGAF
CBCA7AX7773CBCA7BR777

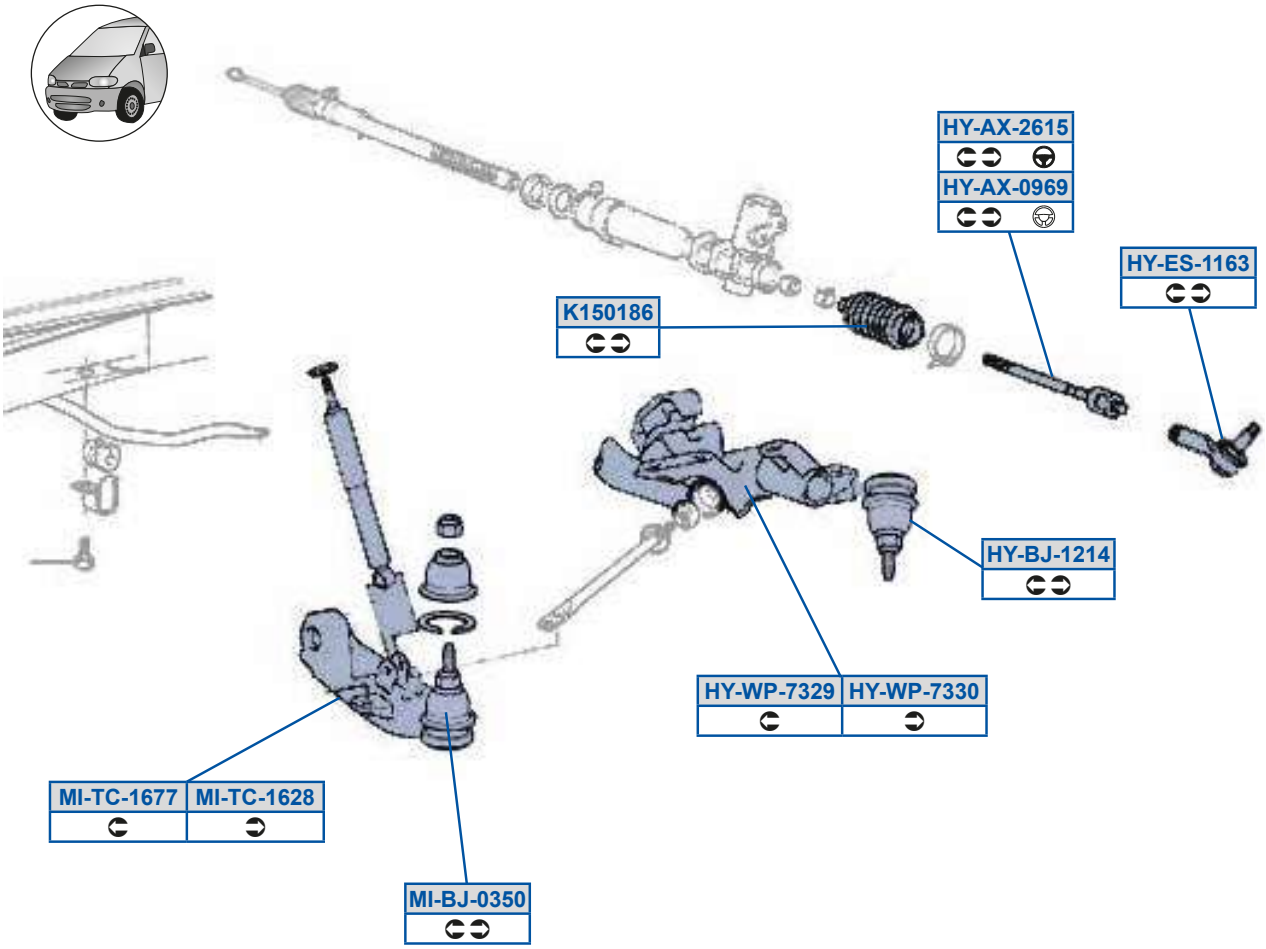
HY-AX-2615
HY-AX-0969
HY-ES-1163
K150186
HY-BJ-1214
HY-WP-7329
HY-WP-7330
MI-TC-1677
MI-TC-1628
MI-BJ-0350

Vj 5Oi 58GDG
CDBC79B7783CDCB79C777

Vj 5Oi 5>D9C
CDCB79C7773CEECC9C777

Vj 5PX59>9B
CBB8EBA0773CBB8EBE777

Vj 5Sd599DA
CDFE9BA7773CDFE9BA787

Vj 5h a5EA>G
CBB87BA77B3CBB87BA77C

Vj 5h a5EAA8
CBBA7BA77B3CBBA7BA77C

Y9C89FD
CEEEBB0777

[V5PX58AC8
CBC9BBA7783CBCA7B0777

[V5eQ59D>F
CBC87BA8C73CBC87BA8C9

[V5eQ59DEE
CBC87BA8C73CBC87BA8C8

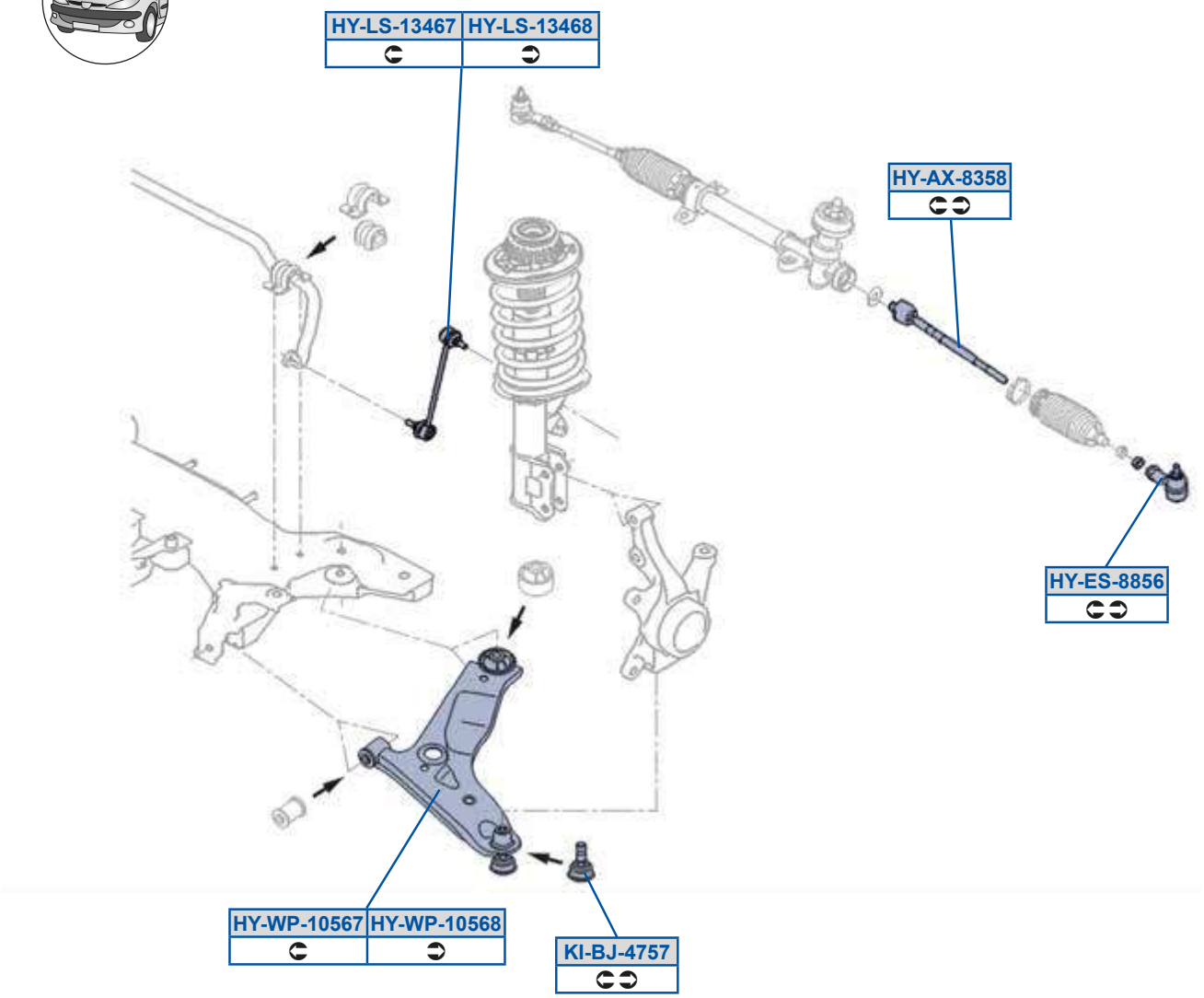
HY-LS-13467
HY-LS-13468
HY-AX-8358
HY-ES-8856
HY-WP-10567
HY-WP-10568
KI-BJ-4757

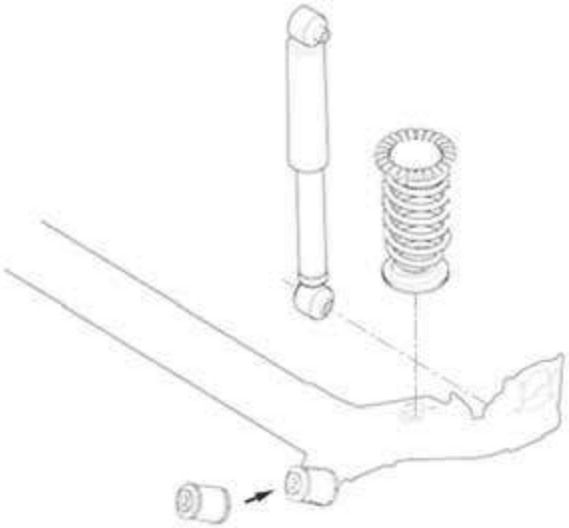

Vj 5Oi 5FACF
CEE9B7 7773CEE9B7 787

Vj 5Sd5FFCD
CDF977 7773CDF977 787

Vj 5Zd59ABDE
CBFA77 C773CBFA7PB777

Vj 5Zd59ABDF
CBFB77 C773CBFB7PB777

Vj 5h a598CDE
CBC777 7773CBC777 877

Vj 5h a598CDF
CBC787 7773CBC787 877

YV5PX5BECE
CBCA77E7773CBCA77 777

Vj f] ROW

é, 8 0aP4aPe1	8F78F		

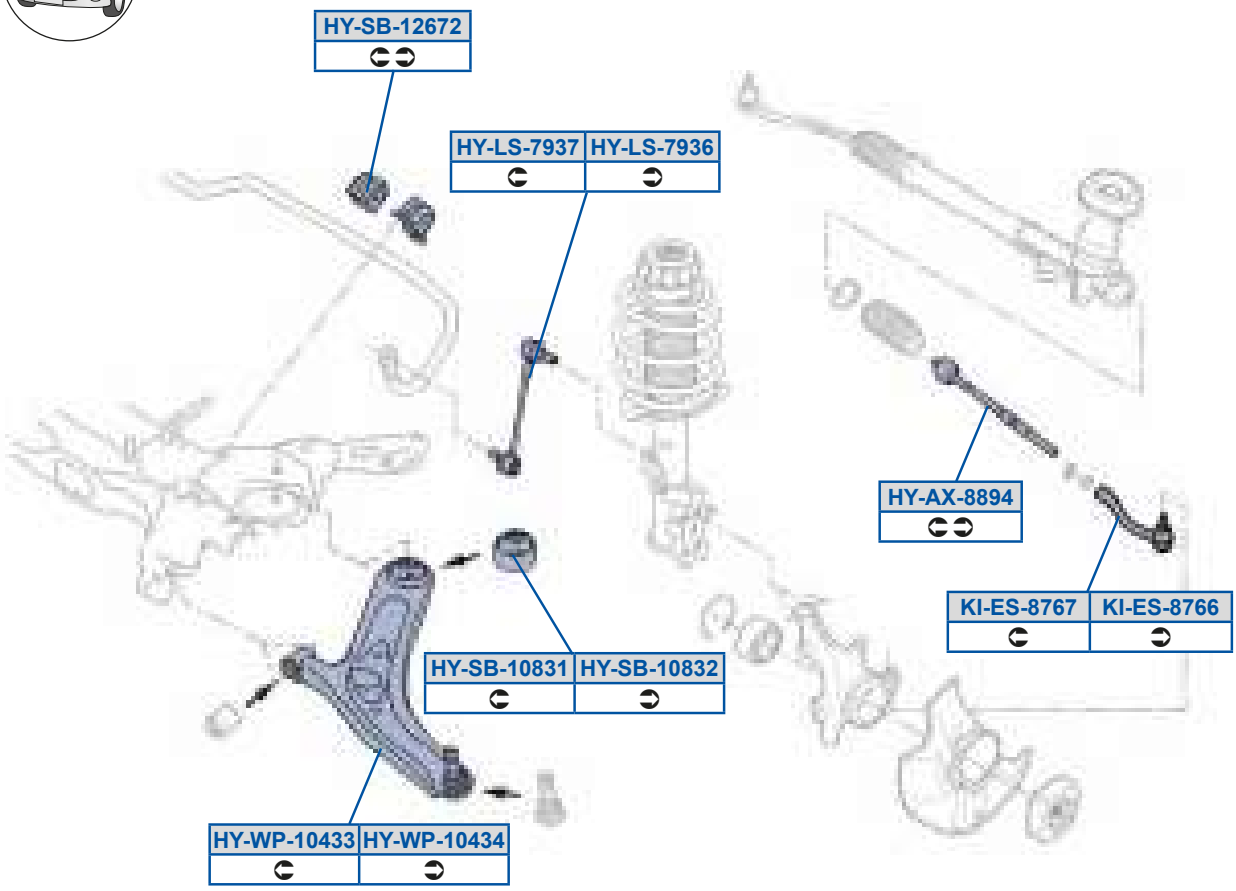

Vj 5Oi 5FFGB
CEE9B8X777

YV5Sd5FEDD
CDF979Y7C7

Vj 5Zd5EGAD
CBFB78X777

YV5Sd5FEDE
CDF979Y777

Vj 5Zd5EGAE
CBFA78X777

Vj 5dP598FA9
CBCC88X777

Vj 5dP598FA>
CBCFB8X777

Vj 5dP59>DE>
CBF8A8X777

Vj 5h a598BAA
CBC778XC773CBC778XE77

Vj 5h a598BAB
CBC788XC77

Vj f] ROW

é 8 0JP1	9979B	é 8 0QeWS 0JP1	8G79C
é 8 Q x 0JP1	8C79C		

z>8 0997>89B5L1IUPn

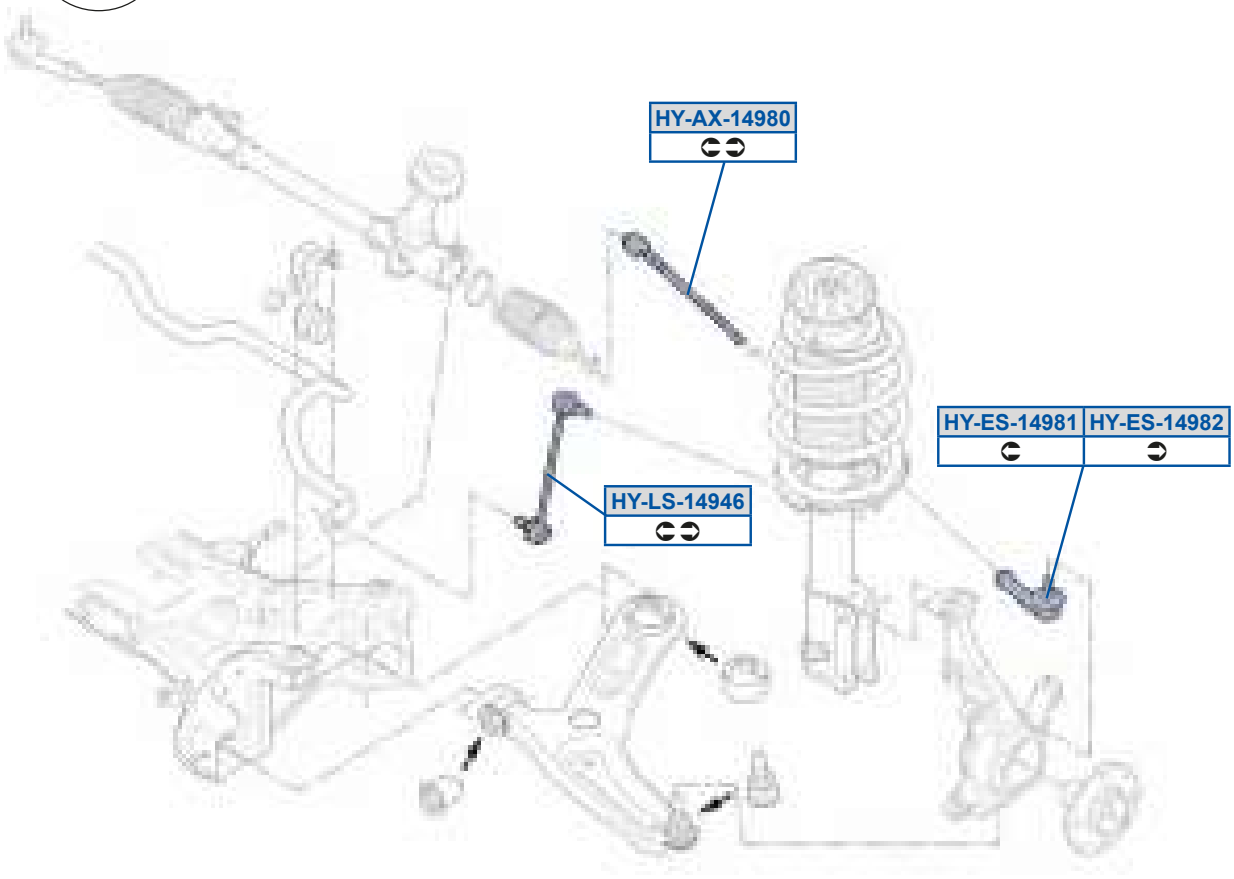

Vj f] ROW

MOOG

Vj 5Oi 59BGF8
CDCB7QF777

Vj 5Sd59BGF9
CDF97QF777

Vj 5Sd59BGF>
CDF97QFG77

Vj 5Zd59BGBD
CBFA7QF777

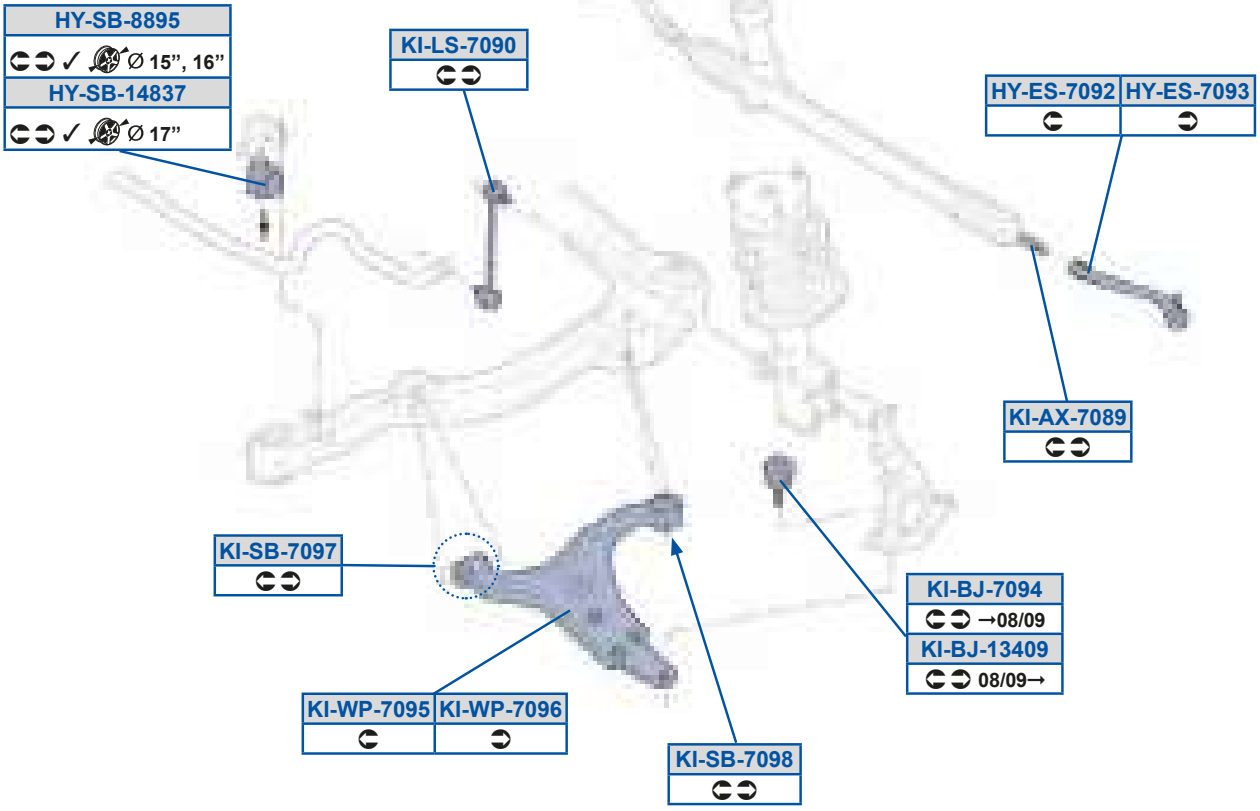
HY-SB-8895
Ø 15", 16"
HY-SB-14837
Ø 17"
KI-LS-7090
HY-ES-7092
HY-ES-7093
KI-AX-7089
KI-SB-7097
KI-BJ-7094
→08/09
KI-BJ-13409
08/09→
KI-WP-7095
KI-WP-7096
KI-SB-7098

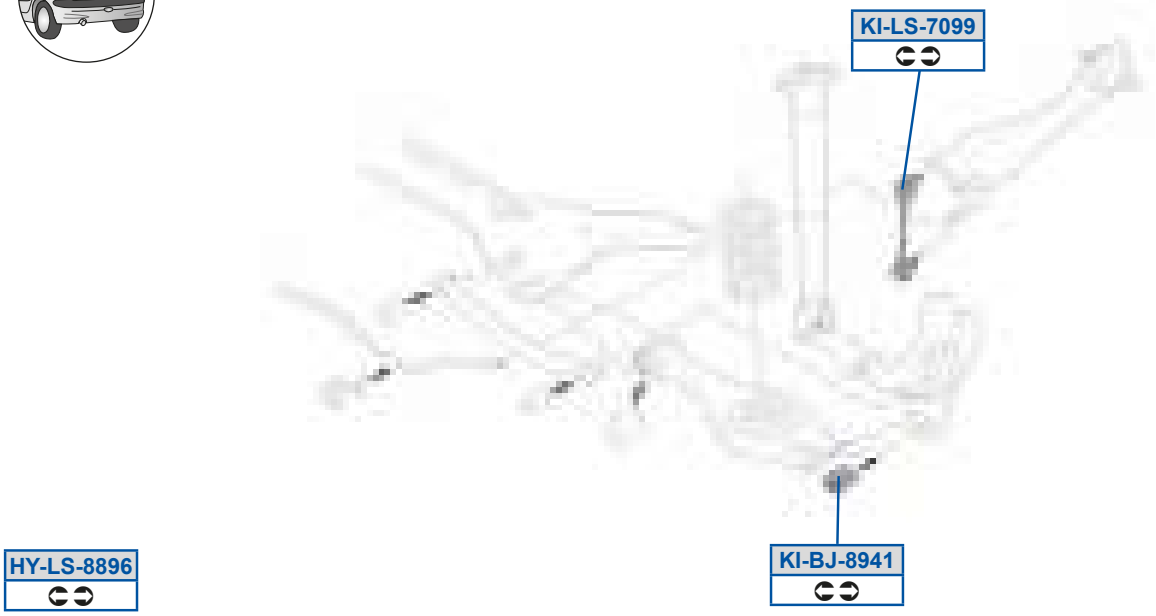
KI-LS-7099
HY-LS-8896
KI-BJ-8941

Vj 5Sd5E8G>
CDF979V777

YV6PX5FGB9
CC8A7BR777

Vj 5Sd5E8GA
CDF979V7G7

YV6ZZd5E8G8
CBFA79V7773CBFA79V877

Vj 5Zd5FFGD
CC9C79V777

YV6ZZd5E8GG
CCCA78V7773CCCA78V877

Vj 5dP59BFAE
CBF8A48V877

YV6dP5E8GE
CBCC89V777

Vj 5dP5FFGC
CBF8A49V777

YV6dP5E8GF
CBCFB9V777

YV6Oi 5E8FG
CDCB79V777

YV6h a5E8GC
CBC779V7773CBC779V877

YV6PX59AB8G
C8ED79n777

YV6h a5E8GD
CBC789V7773CBC789V877

YV6PX5E8GB
C8ED77I 7773C8ED79U777

Vj f] ROW

é AC ŒZ[4SZ17ef Qd_] ŒZ[4SZ1	8F78G		

z ACIZ[4SZn

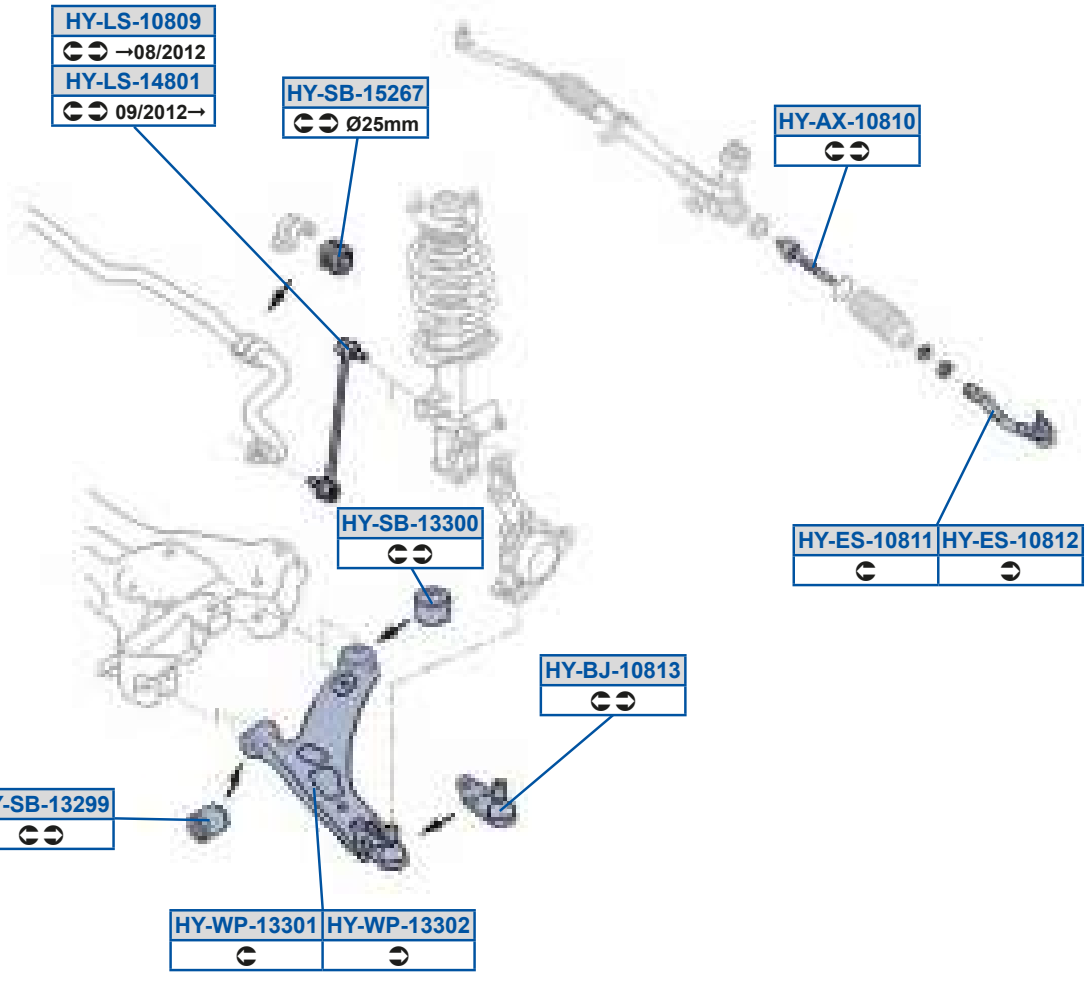

Vj f] ROW

✗ 4x4

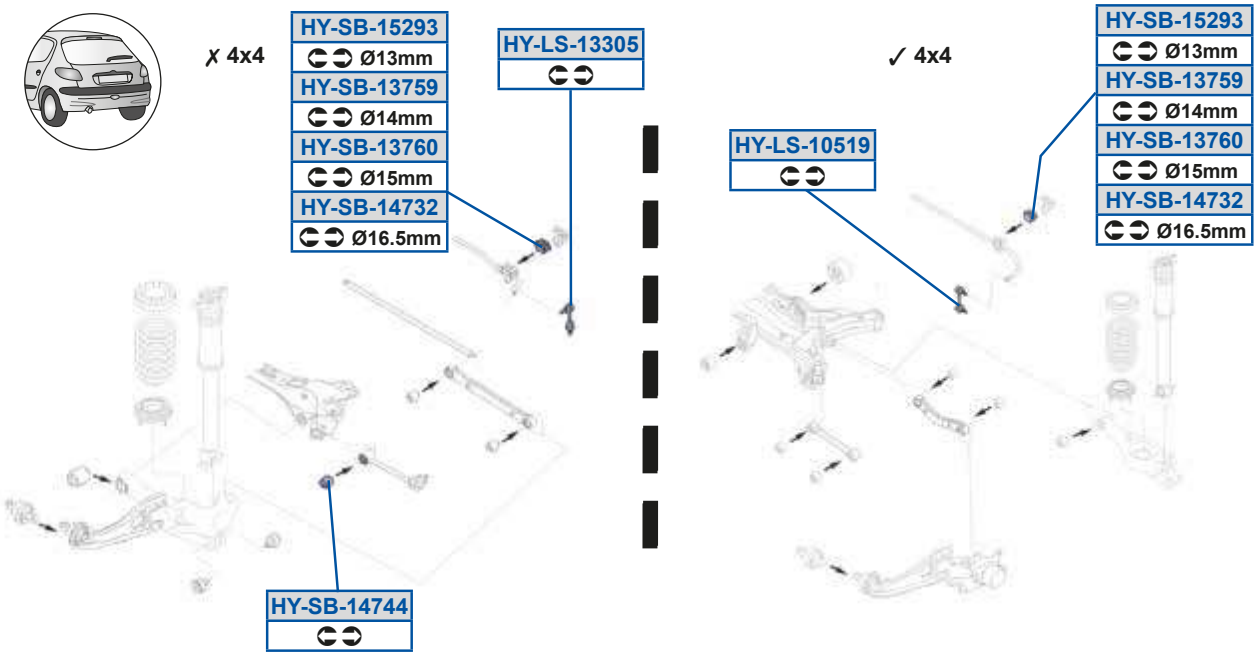

MOOG

Vj 5Oi 598F98
CEE9B9o777

Vj 5dP59A>GG
CBCC89o777

Vj 5dP59C>GA
CCC8AAdA77

Vj 5PX598F9A
CBCA7Ao777

Vj 5dP59AA88
CBCFB9o7773CBCFBAo777

Vj 5h a59AA89
CBC779 777

Vj 5Sd598F99
CDF979o7773CDF979t 8G7

Vj 5dP59AECG
CCC8AAd977

Vj 5h a59AA8>
CBC789 777

Vj 5Sd598F9>
CDF979o7C73CDF979t 877

Vj 5dP59AED8
CCC8AAd877

Vj 5Zd598C9G
CCCA79o8773CCCA79o977

Vj 5dP59BE>9
CBCFB9t 777

Vj 5Zd598F8G
CBFA79o7773CBFA79o977

Vj 5dP59BEA>
CCC8A9o877

Vj 5Zd59AA8C
CCCA7An7773CCCB7An777

Vj 5dP59BEBB
CC9CA9o777

Vj 5Zd59BF89
CBAF7Au7773CBFA7Au777

Vj 5dP59C>DE
CBF8A9o777

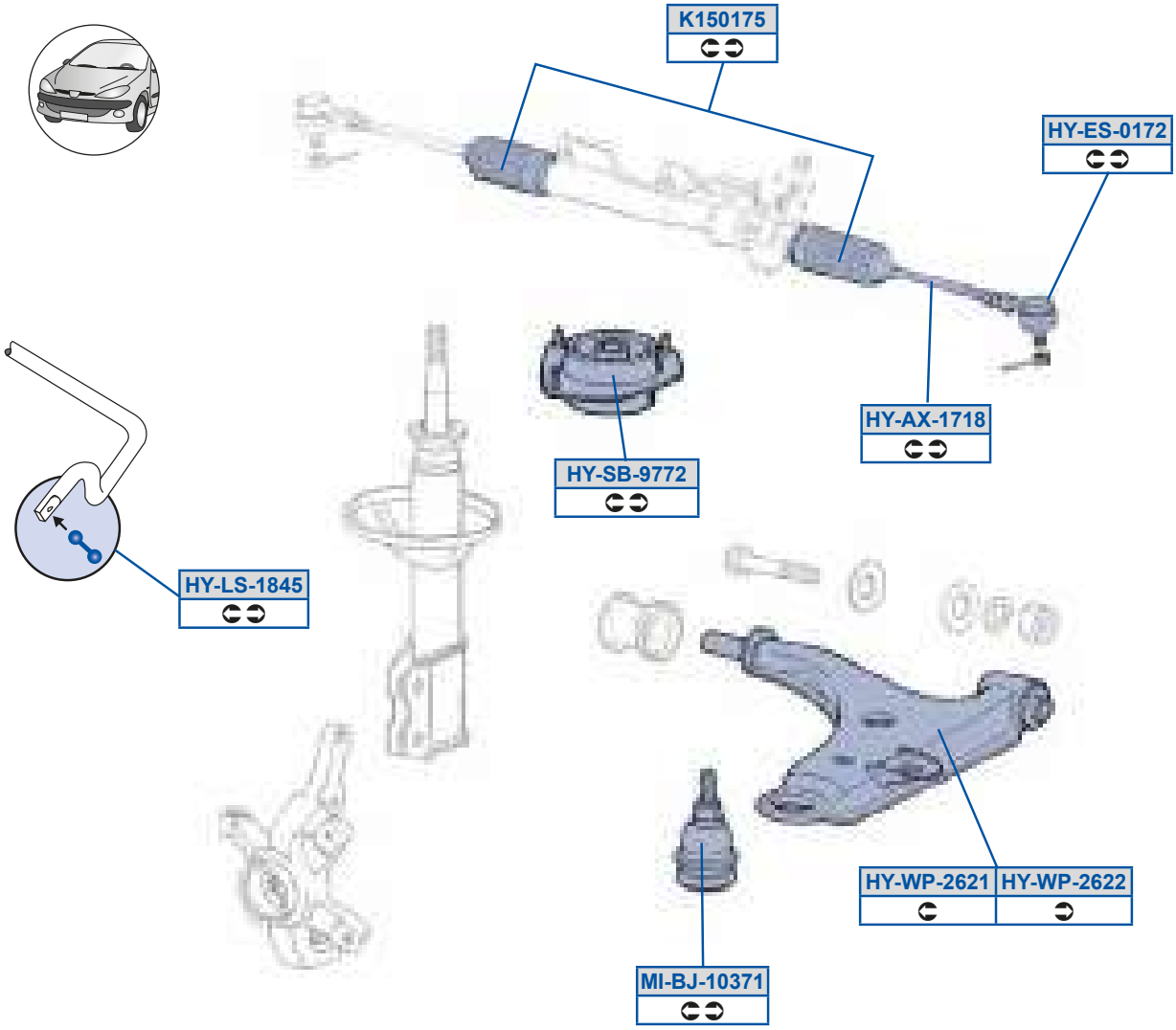
K150175
HY-ES-0172
HY-AX-1718
HY-SB-9772
HY-LS-1845
HY-WP-2621
HY-WP-2622
MI-BJ-10371

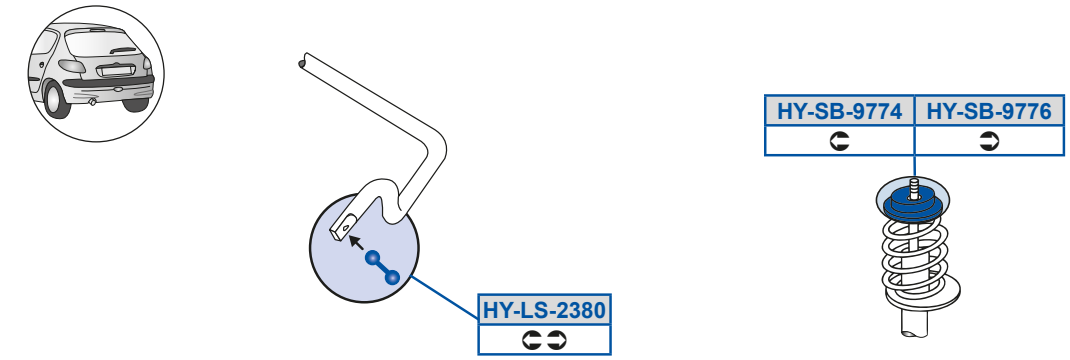
HY-SB-9774
HY-SB-9776
HY-LS-2380

Vj 5Oi 59E9F
CEEA79G7773CEEA79G778

Vj 5h a5>D>>
CBC789G7773CBC789GC77

Vj 5Sd589E>
CDF97997773CDF979C777

Y9C89EC
CDC9F9B777

Vj 5Zd59FBC
CBFA79G7773CBFA79GC77

[W9PX598AE9
CBC7A990773CBC7A9C077

Vj 5Zd5>AF8
CCCA79G7773CCCA79GC77

Vj 5dP5GEE>
CBD879G7773CBD879R777

Vj 5dP5GEEB
CCA879G777

Vj 5dP5GEED
CCA979G777

Vj 5h a5>D>9
CBC779G7773CBC779GC77

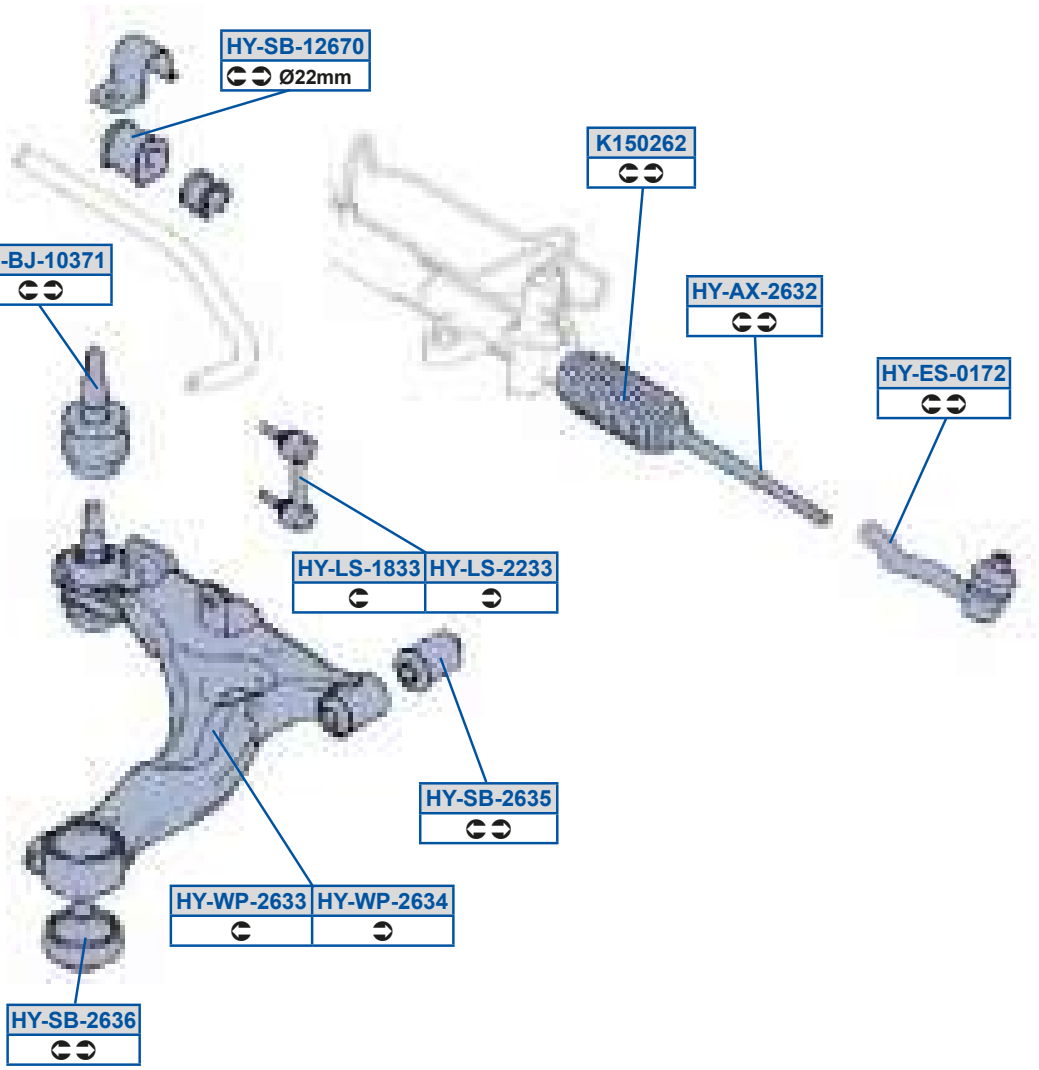

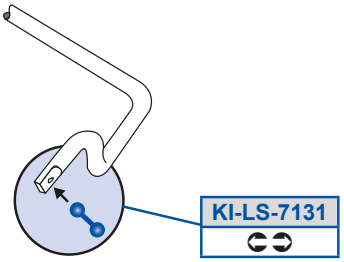

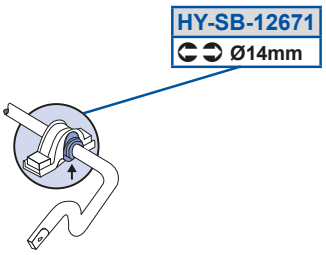

HY-TC-13323	HY-TC-13324

MOOG

Vj 5Oi 5>DA>
CEE9BAO7773CEECC8E777

Vj 5eQ59AA>A
CC9878E777

Vj 5Sd589E>
CDF97997773CDF979C777

Vj 5eQ59AA>B
CC9978E777

Vj 5Zd59FAA
CBFA78E7873CBFA79C787

Vj 5h a5>DAA
CBC778E777

Vj 5Zd5>>AA
CBFA78E7973CBFA79C797

Vj 5h a5>DAB
CBC788E777

Vj 5dP59>DE8
CBF8A8E877

Y9C8>D>
CEE9F8E777

Vj 5dP59>DE9
CCC8A8E777

YWZd5E9A9
CCCA78E7773CCCA78E787

Vj 5dP5>DAC
CBCC88Q7773CBCC89C777

[VWPX598AE9
CBC7A990773CBC7A9CO77

Vj 5dP5>DAD
CBCFB8E777

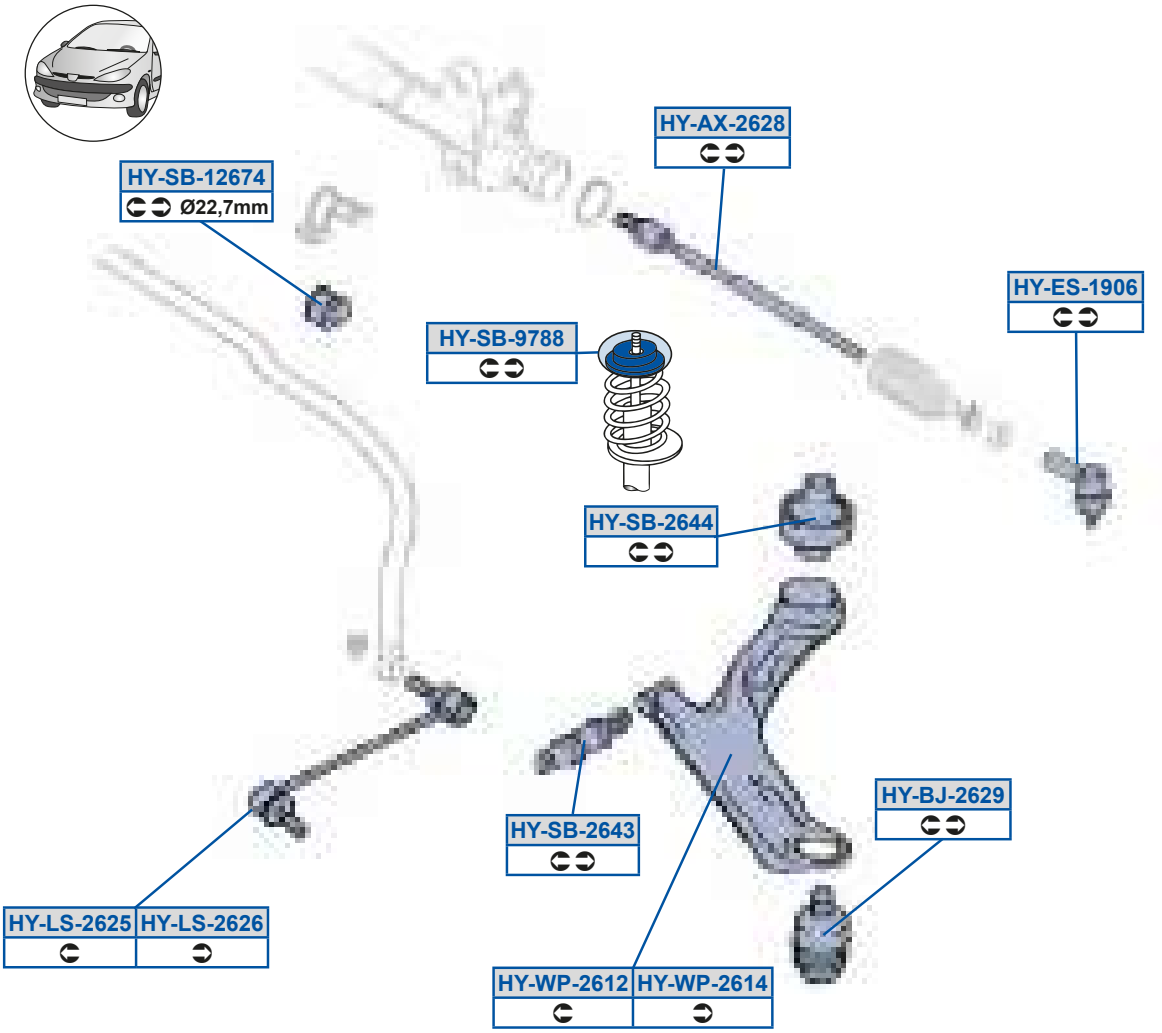

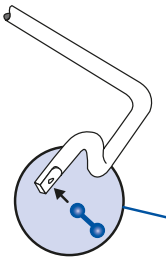

HY-LS-4688 | HY-LS-4689

HY-SB-9790

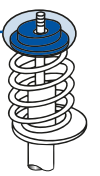

HY-SB-10931

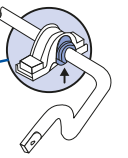

HY-SB-15325

Vj 5Oi 5>D>F
CEEFC9D977

Vj 5dP59>DEB
CBF8A9D7773CBF8A9D877

Vj 5PX5>D>G
CBC7A9P0773CBC7AAP077

Vj 5dP59CA>C
CC99C9DC77

Vj 5Sd59G8D
CDF97AP777

Vj 5dP5>DBA
CBCC8A0777

Vj 5Zd5>D>C
CBFA79D7773CBFA79D877

Vj 5dP5>DBB
CBCCC9D7773CBCCCA0877

Vj 5Zd5>D>D
CBFB79D7773CBFB79D877

Vj 5dP5GEFF
CBD87AE877

Vj 5Zd5BDFF
CCCA79DD773CCCA79DE77

Vj 5dP5GEG8
CCA879D7773CCA8C9D777

Vj 5Zd5BDFG
CCCB79DD773CCCB79DE77

Vj 5h a5>D9>
CBC789D777

Vj 5dP598GA9
CCC8A9P977

Vj 5h a5>D9B
CBC799D777

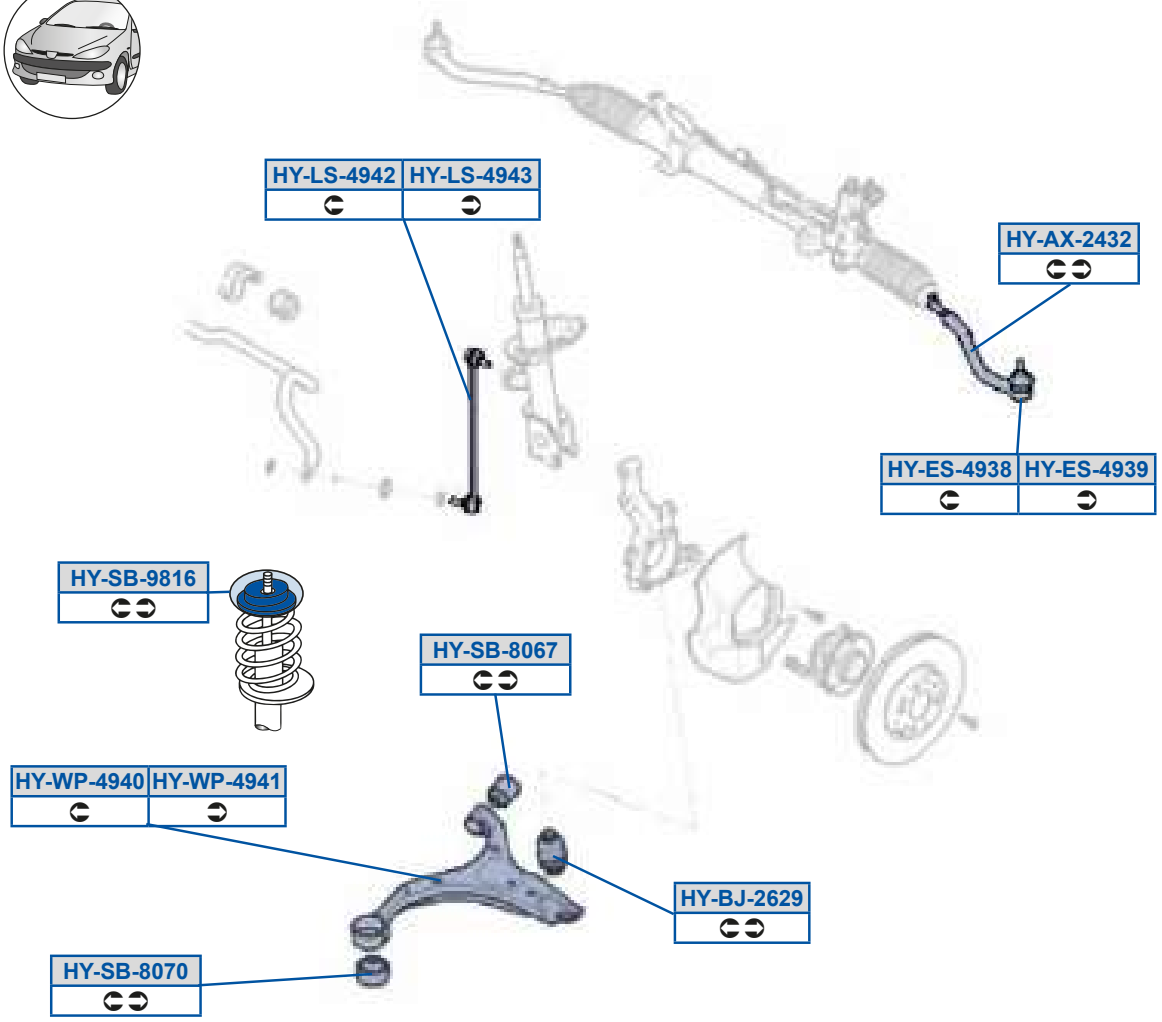
HY-LS-4942
HY-LS-4943
HY-AX-2432
HY-ES-4938
HY-ES-4939
HY-SB-9816
HY-SB-8067
HY-WP-4940
HY-WP-4941
HY-BJ-2629
HY-SB-8070

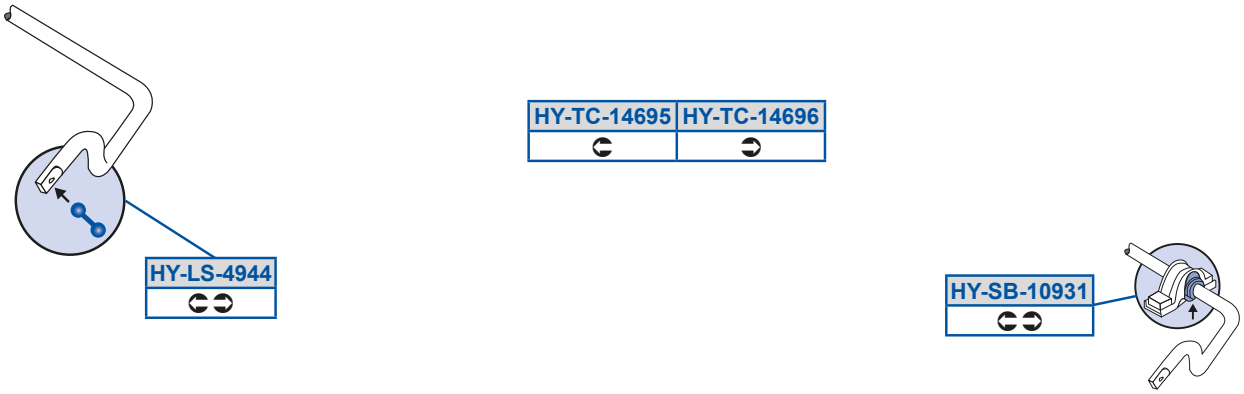
HY-TC-14695
HY-TC-14696
HY-LS-4944
HY-SB-10931

Vj 5Oi 5>BA>
CEE9B9P777

Vj 5Zd5BDFF
CCCA79DD773CCCA79DE77

Vj 5dP5>DBA
CBCC8A0777

Vj 5eQ59BDGD
CC9B77 7773CC9B79P777

Vj 5Oi 5>D>F
CEEFC9D977

Vj 5Zd5BDFG
CCCB79DD773CCCB79DE77

Vj 5dP5>DBB
CBCCC9D7773CBCCCA0877

Vj 5h a5>D9>
CBC789D777

Vj 5PX5>D>G
CBC7A9P0773CBC7AAP077

Vj 5Zd5BGB>
CBFA79P7773CBFA79P977

Vj 5dP5F8DE
CBCC79i 7773CBCC89P777

Vj 5h a5>D9B
CBC799D777

Vj 5Sd59G8D
CDF97AP777

Vj 5Zd5BGBA
CBFB79P7773CBFB79P977

Vj 5dP5F8E8
CBCFB9P7773CBCFBAX777

Vj 5h a5BGB8
CBC779P7773CBC779P877

Vj 5Sd5BGAF
CDF979P7773CDF989P777

Vj 5Zd5BGBB
CCCA79P7773CCCA79P977

Vj 5dP5GEFF
CBD87AE877

Vj 5h a5BGB9
CBC789P7773CBC789P877

Vj 5Sd5BGAG
CDF979PG773CDF989PG77

Vj 5dP598GA9
CCC8A9P977

Vj 5dP5GEG8
CCA879D7773CCA8C9D777

Vj 5Zd5>D>C
CBFA79D7773CBFA79D877

Vj 5dP59>DEB
CBF8A9D7773CBF8A9D877

Vj 5dP5GF9D
CBD879P7773CBD87BR777

Vj 5Zd5>D>D
CBFB79D7773CBFB79D877

Vj 5dP59CA>C
CC99C9DC77

Vj 5eQ59BDGC
CC9A77 7773CC9A79P777

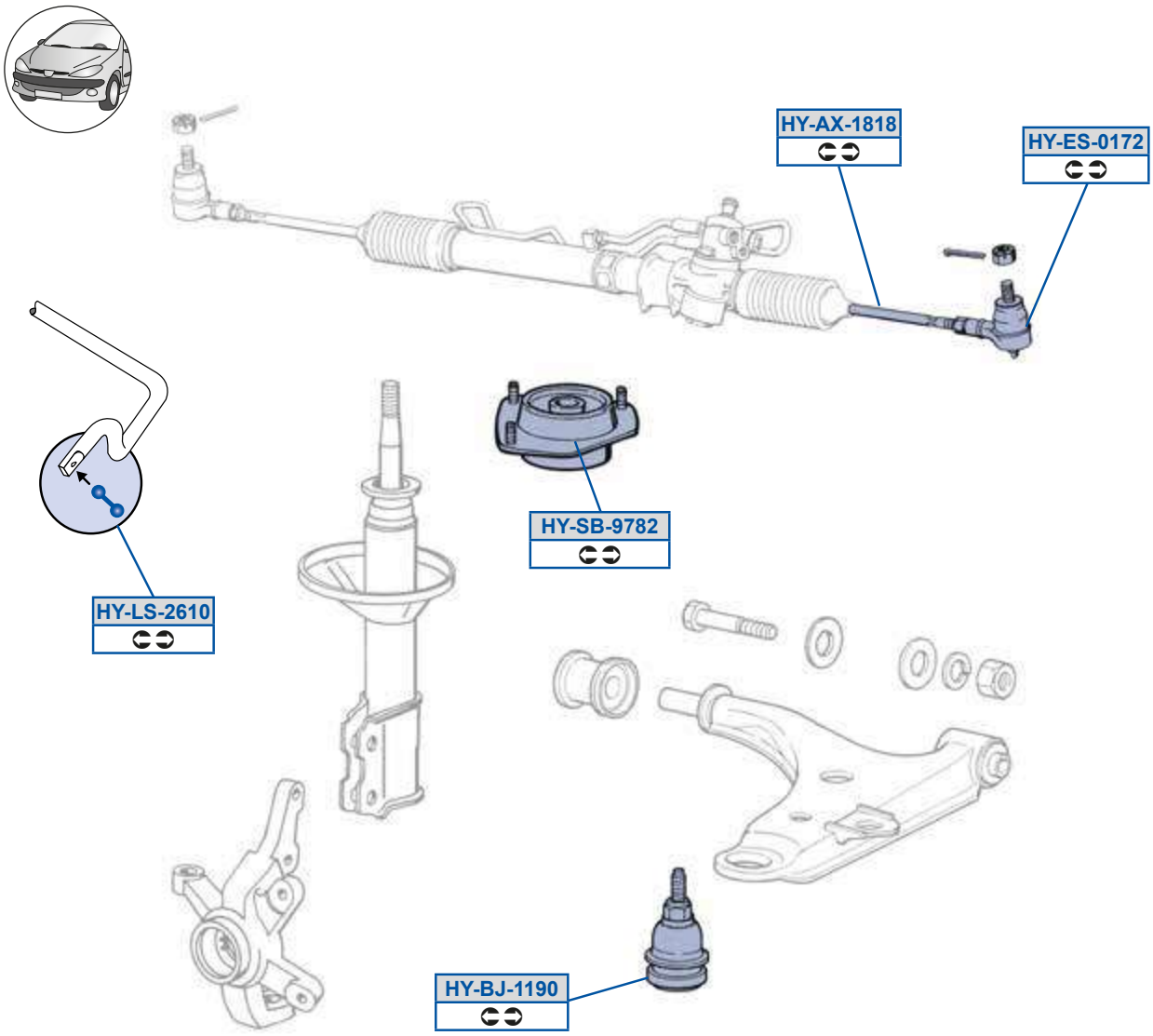
HY-AX-1818
HY-ES-0172
HY-SB-9782
HY-LS-2610
HY-BJ-1190

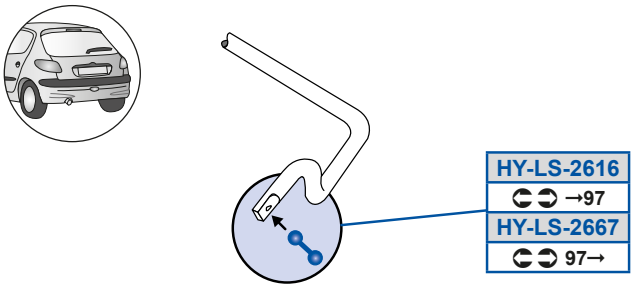
HY-LS-2616
→97
HY-LS-2667
97→

Vj 5Oi 59F9F
CEE8DAB7773CEE9BAO777

Vj 5PX599G8
CBC7AABO773CBC7AABO78

Vj 5Sd589E>
CDF97997773CDF979C777

Vj 5Zd5>D98
CBFA7AB7773CBFA7ABC77

Vj 5Zd5>D9D
CCCF7AE7973CCCF7AE7A7

Vj 5Zd5>DDE
CCCA7AF7773CCCA7AF787

Vj 5dP5GEF>
CBD87AB7773CBD87AB787

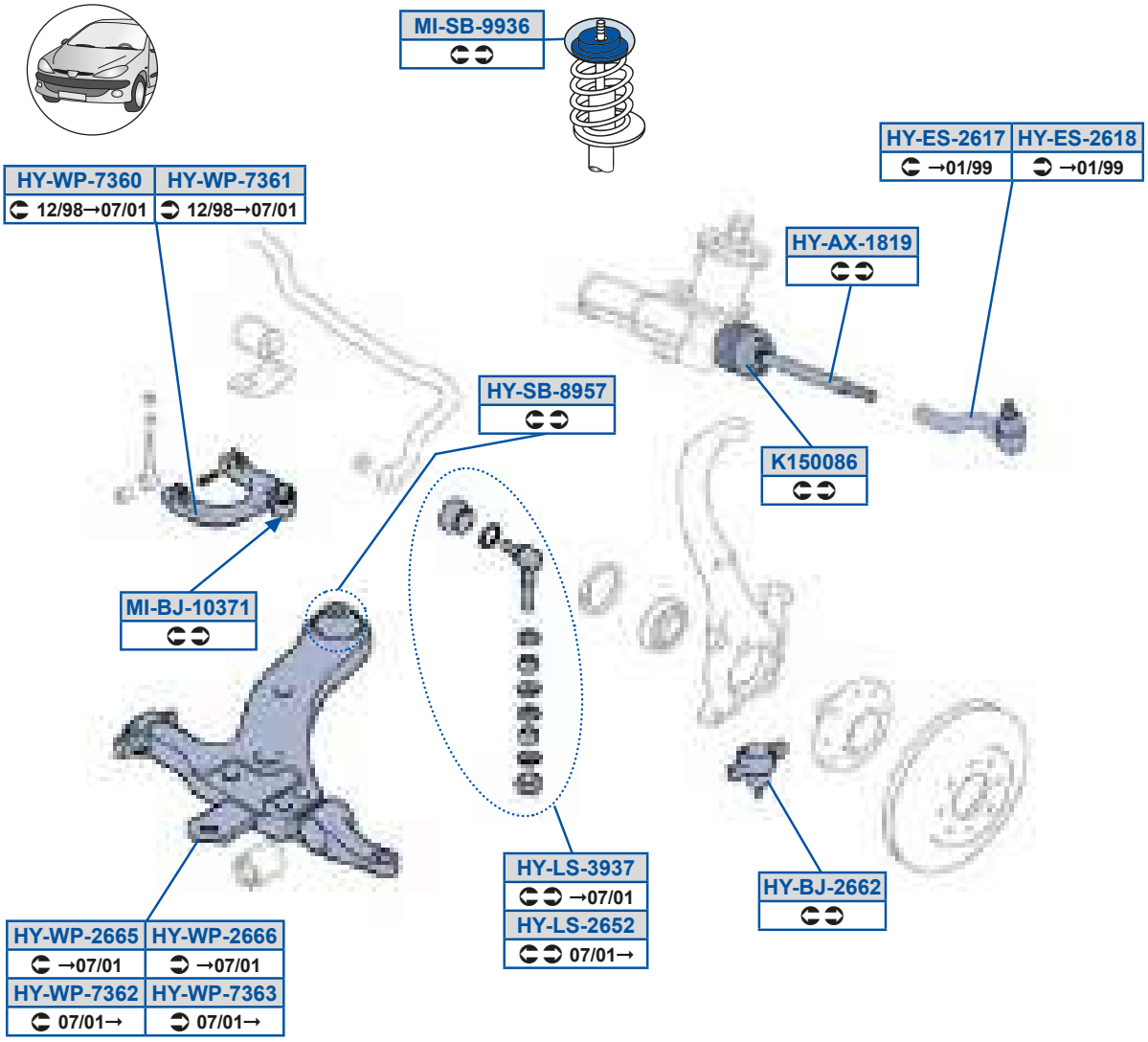
MI-SB-9936
HY-ES-2617
→01/99
HY-ES-2618
→01/99
HY-WP-7360
12/98→07/01
HY-WP-7361
12/98→07/01
HY-AX-1819
HY-SB-8957
K150086
MI-BJ-10371
HY-LS-3937
→07/01
HY-LS-2652
07/01→
HY-BJ-2662
HY-WP-2665
→07/01
HY-WP-2666
→07/01
HY-WP-7362
07/01→
HY-WP-7363
07/01→

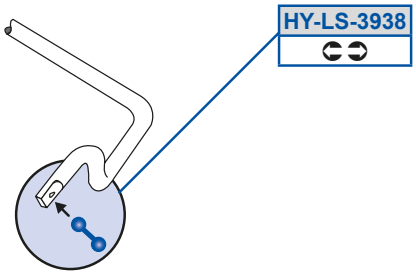
HY-LS-3938

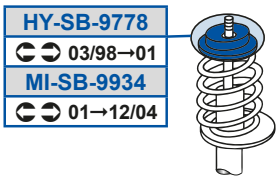
HY-SB-9778
03/98→01
MI-SB-9934
01→12/04

Vj 5Oi 59F9G
CEE9BAF7773CEE9BAF787

Vj 5dP5GEEF
CBD879C777

[V5PX598AE9
CBC7A990773CBC7A9C077

Vj 5PX5>DD>
C8ED7AF7773C8ED8AF077

Vj 5h a5>DDC
CBC77AF777

[V5dP5GGAB
a P9B9ACF3a PAAFD97

Vj 5Sd5>D9E
CDF97AF7773CEEF7AF777

Vj 5h a5>DDD
CBC78AF777

[V5dP5GGAD
a PFE8EBF3a PG87FFE

Vj 5Sd5>D9F
CDF97AFG773CDF97AG777

Vj 5h a5EAD8
CBB87AF777

Vj 5Zd5>DC>
CBFA7AF8773CBFA7AF887

Vj 5h a5EAD9
CBB97AF777

Vj 5Zd5AGAE
CBFA7AF8773CBFA7AF887

Vj 5h a5EAD>
CBC77AF788

Vj 5Zd5AGAF
CBCA7AFD773CCCA7AFD77

Vj 5h a5EADA
CBC78AF788

Vj 5dP5FGCE
CBCFBAF877

Y9C88FD
CEEB7AF777

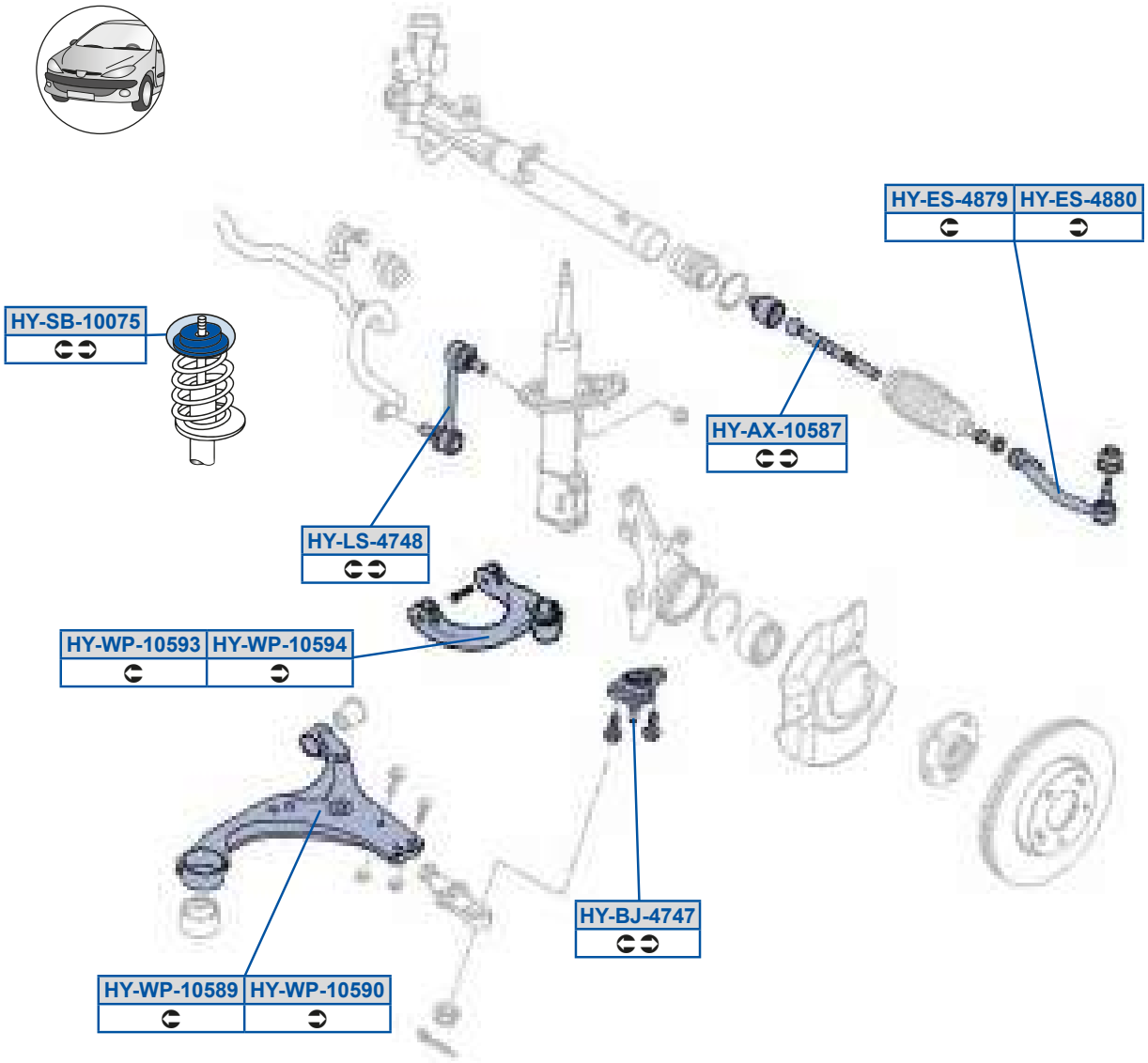
HY-ES-4879
HY-ES-4880
HY-SB-10075
HY-AX-10587
HY-LS-4748
HY-WP-10593
HY-WP-10594
HY-BJ-4747
HY-WP-10589
HY-WP-10590

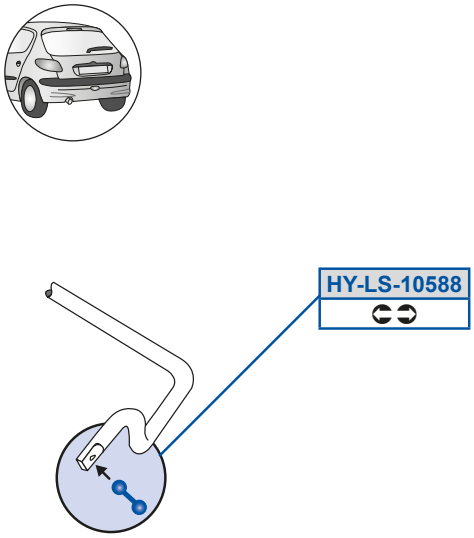
HY-LS-10588

MOOG

Vj 5Oi 598CFE
CEE9BAY777

Vj 5PX5BEBE
C8ED7AY777

Vj 5Sd5BFEG
CDF97AY777

Vj 5Sd5BFF8
CDF97AY787

Vj 5Zd598CFF
CCCA7AY7773CCCA7AY778

Vj 5Zd5BEBF
CBFA7AY7773CBFA7AY787

Vj 5dP5988EC
CBDA7ATD773CBDA7AY777

Vj 5h a598CFG
CBC77AY7773CBC77AY7D7

Vj 5h a598CG8
CBC78AY7773CBC78AY7D7

Vj 5h a598CGA
CBB87ATD773CBB87ATD78

Vj 5h a598CGB
CBB87AY7773CBB97ATD77

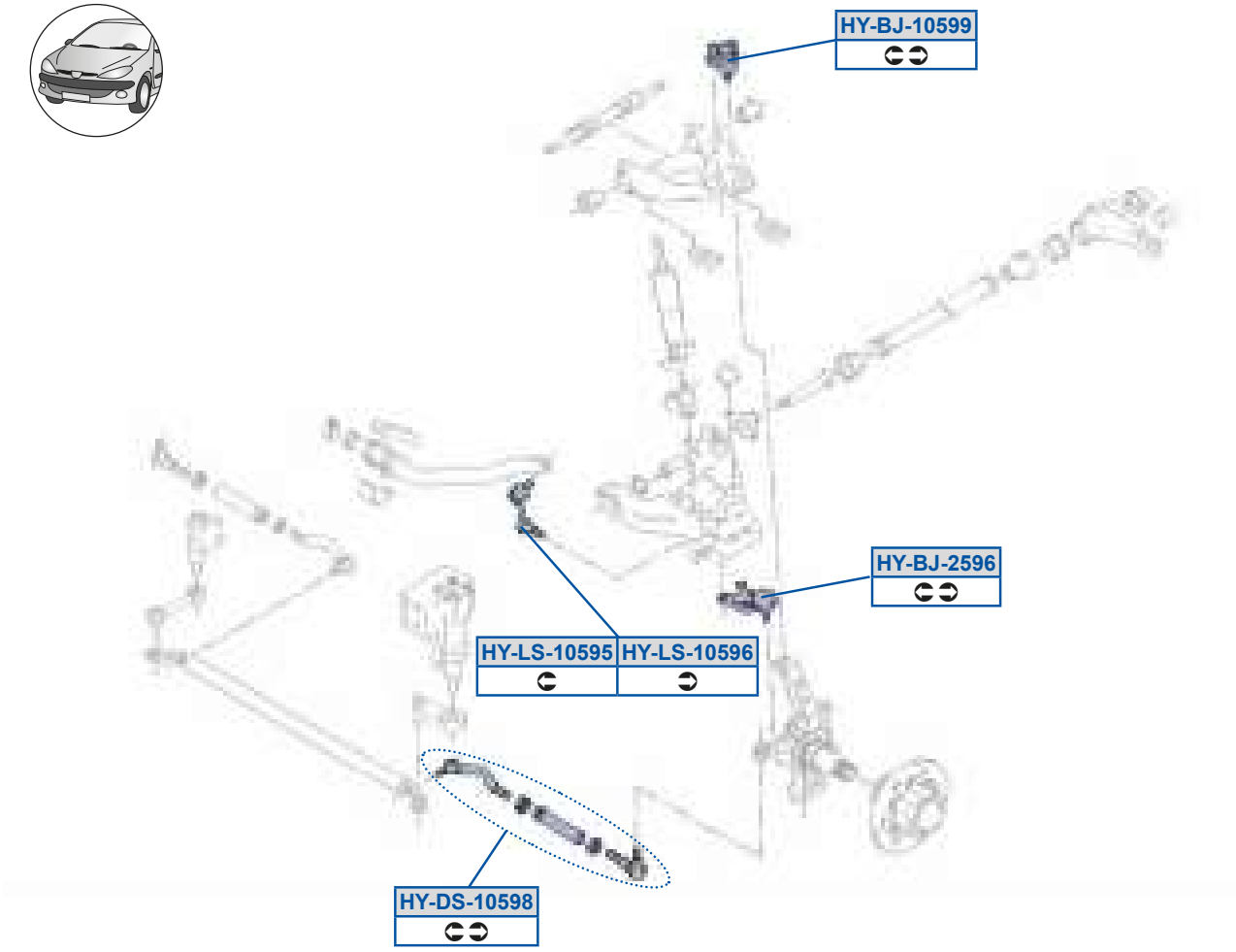
HY-BJ-10599
HY-BJ-2596
HY-LS-10595
HY-LS-10596
HY-DS-10598

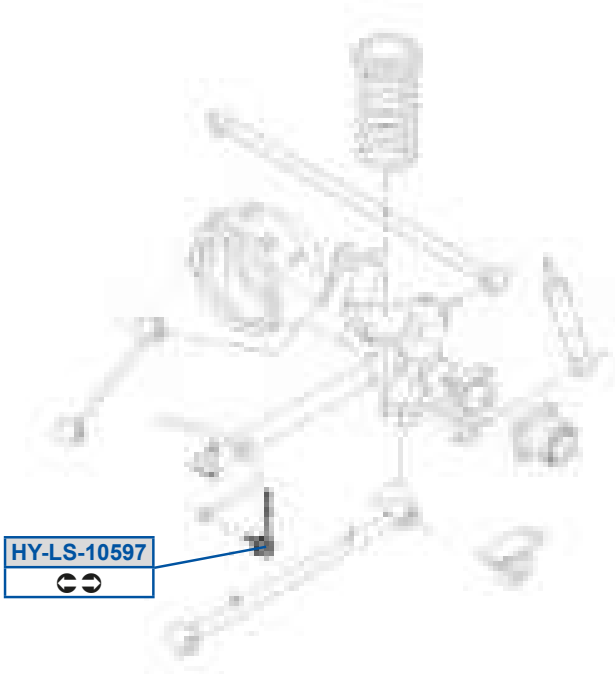
HY-LS-10597

Vj 5PX598CGG
CBBB7V8777

Vj 5PX5>CGD
CBCC7V87773CBCC7V8787

Vj 5Rd598CGF
CDFC7V8788

Vj 5Zd598CGC
CBF99V8777

Vj 5Zd598CGD
CBF9AV8777

Vj 5Zd598CGE
CCF9AV8777

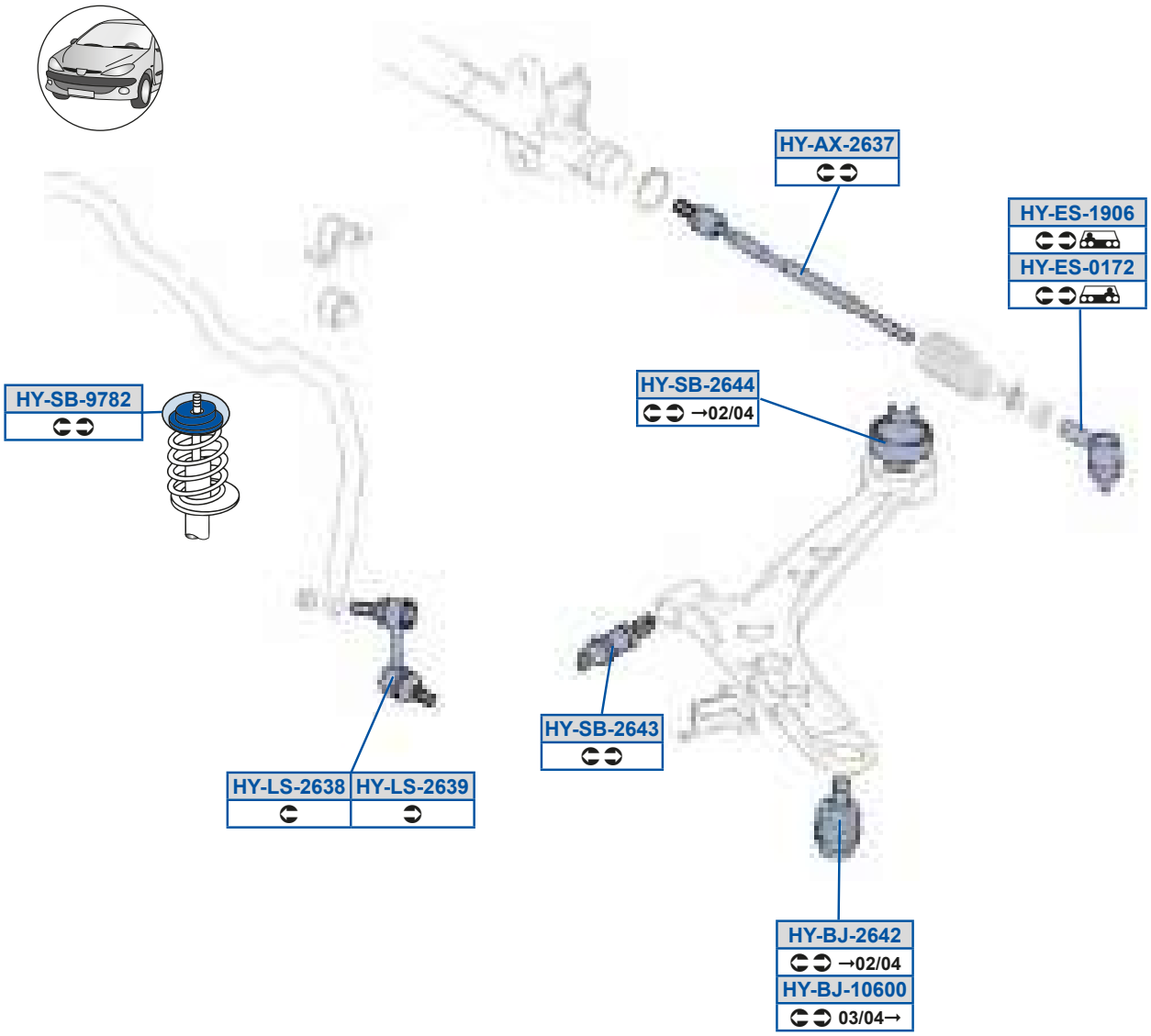
HY-AX-2637
HY-ES-1906
HY-ES-0172
HY-SB-9782
HY-SB-2644
→02/04
HY-SB-2643
HY-LS-2638
HY-LS-2639
HY-BJ-2642
→02/04
HY-BJ-10600
03/04→

Vj 5Oi 5>DAE
CEE8DAB7773CEE9BA0777

Vj 5dP5>DBB
CBCCC9D7773CBCCCA0877

Vj 5PX598D88
CBCA7A0977

Vj 5dP5GEF>
CBD87AB7773CBD87AB787

Vj 5PX5>DB>
CBCA7AP777

Vj 5Sd589E>
CDF97997773CDF979C777

Vj 5Sd59G8D
CDF97AP777

Vj 5Zd5>DAF
CBFA7A0777

Vj 5Zd5>DAG
CBFB7A0777

Vj 5dP5>DBA
CBCC8A0777

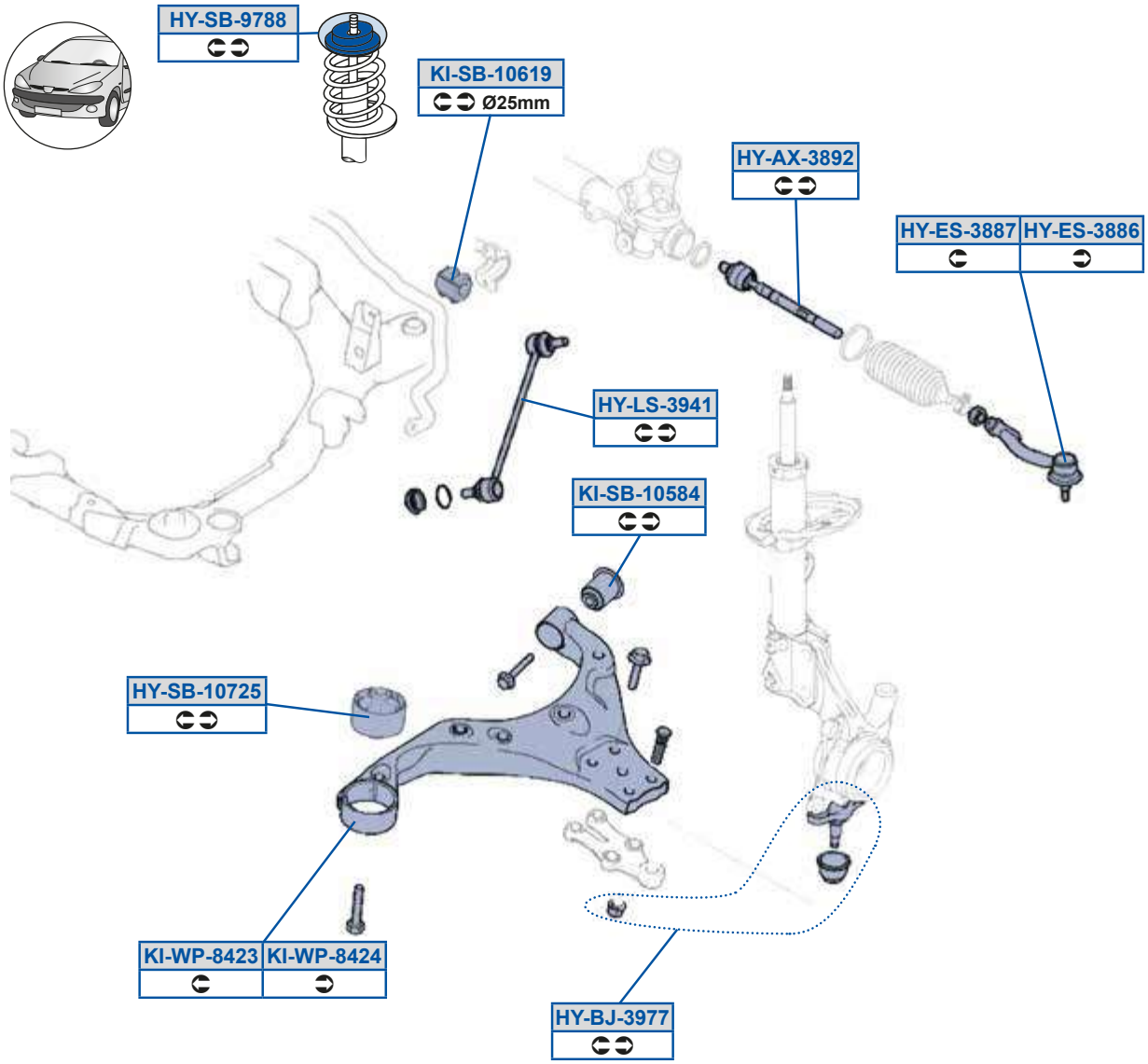
HY-SB-9788
KI-SB-10619
Ø25mm
HY-AX-3892
HY-ES-3887
HY-ES-3886
HY-LS-3941
KI-SB-10584
HY-SB-10725
KI-WP-8423
KI-WP-8424
HY-BJ-3977

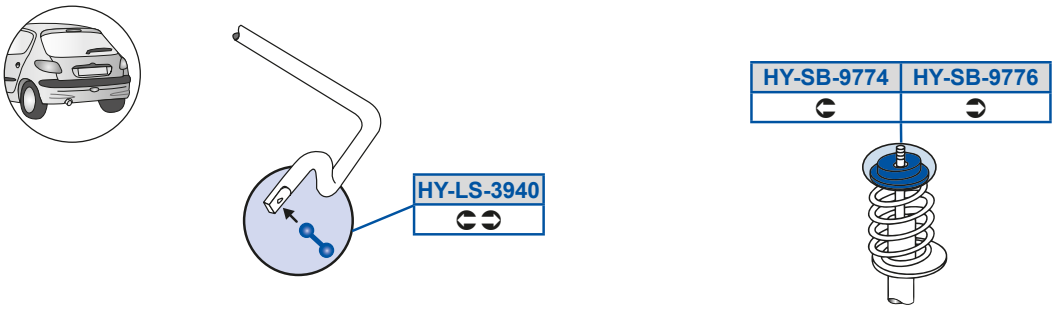
HY-LS-3940
HY-SB-9774
HY-SB-9776

Vj 5Oi 5AFG>
CEE9B9S777

Vj 5dP5GEED
CCA979G777

Vj 5PX5AGEE
C8ED79S7773C8ED79S787

Vj 5dP5GEFF
CBD87AE877

Vj 5Sd5AFFD
CDF979SG77

YV5dP598CFB
CBCC89S777

Vj 5Sd5AFFE
CDF979S777

YV5dP598D9G
CBF8A9S877

Vj 5Zd5AGB8
CCCA79S7773CCCA79S877

YV5h a5FB>A
CBC778T7773CBC779S777

Vj 5Zd5AGB9
CBFA79S7773CBFA79S877

YV5h a5FB>B
CBC788T7773CBC789S777

Vj 5dP598E>C
CBCFB9S777

Vj 5dP5GEEB
CCA879G777

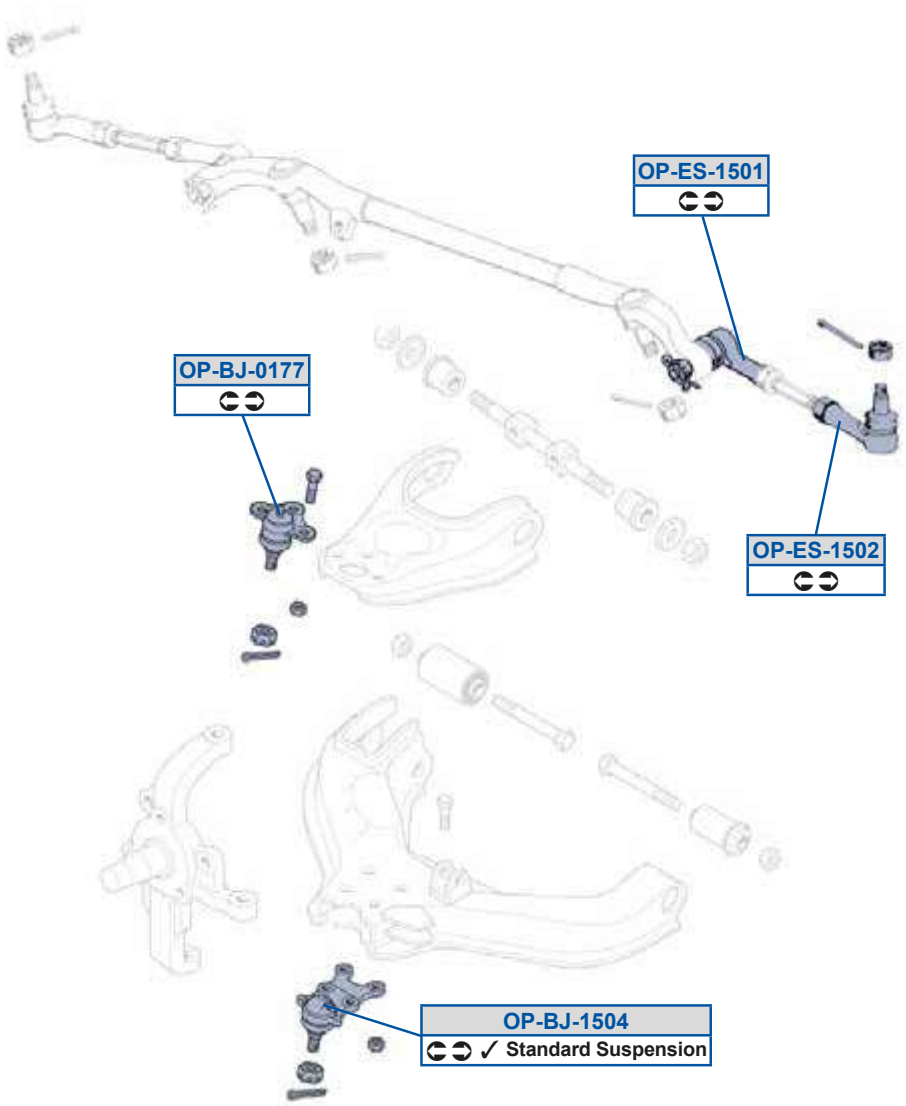
OP-ES-1501
OP-BJ-0177
OP-ES-1502
OP-BJ-1504
✓ Standard Suspension

_ a5PX589EE

A87F9F3FGBBCGBCA9

_ a5PX59C8B

BA7997G3FGBBC98797

_ a5Sd59C89

FGBB8GB7F73FGBB8GB7F8

_ a5Sd59C8>

FGBB8GB7G73FGBB8GB7G8

ROVZk WP P w 7S t x	897EF	8F7GF	ROVZk Wa t y 7QÉt é	897EF	8C7GG
ROVZk WP P w 7S t x	897FG	8C7GG	ROVZk WP	897FG	8C7GG
ROVZk WR v	897FG	8C7GG	ROVZk Wa t y 7QÉt é	897FG	8C7GG

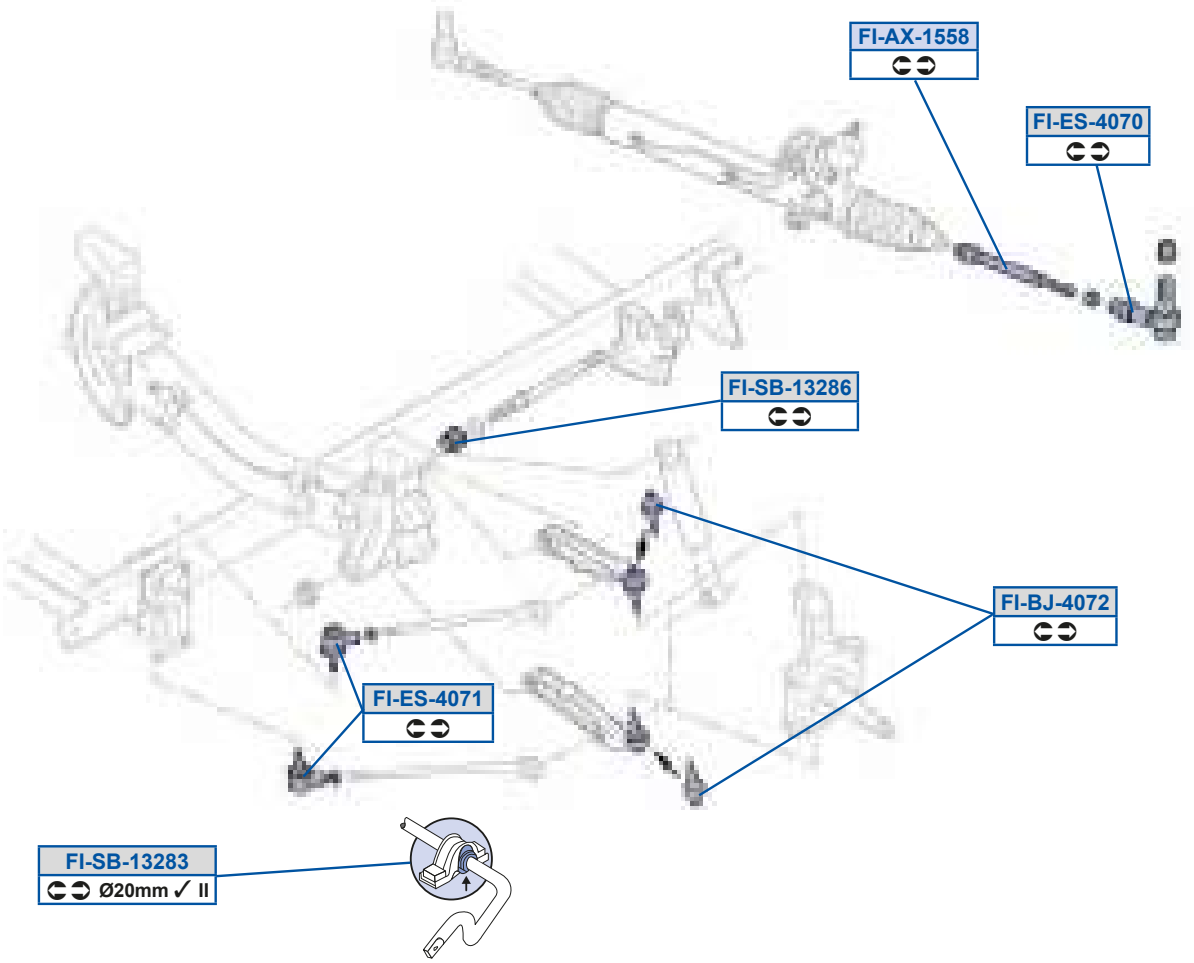

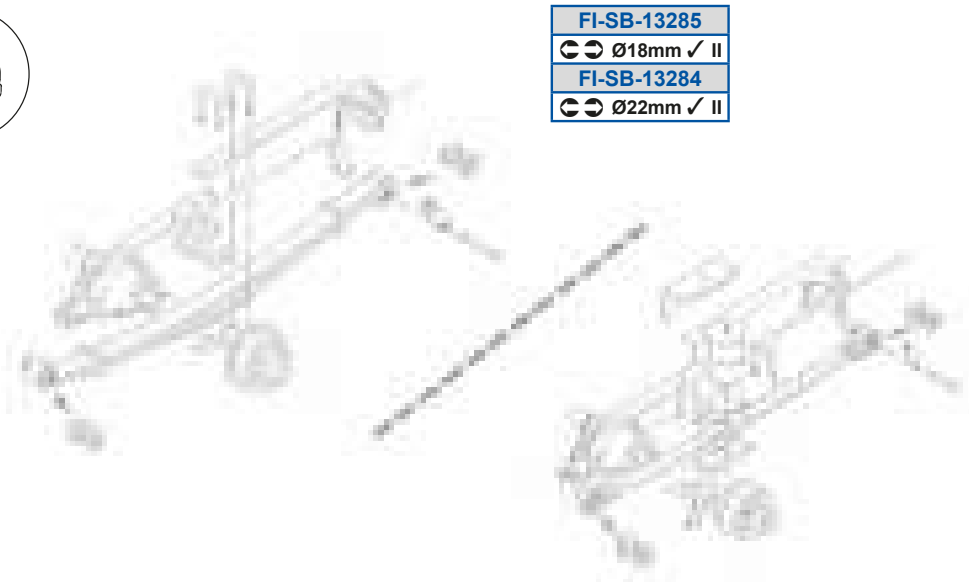

MOOG

TV5dP59A>FA

GAF799BF

TV5dP59A>FB

GAF78D9B

TV5dP59A>FC

FCF8799

TV5dP59A>FD

GAF7EDB8

XOUf Oc

i X	8E7DF 8; 7GA	i X Oi A881	8G7GB 8G7GE
i X Oi X B84F91	987FD 997GB	i X Q x	8G7EA 8A7GD
i XdQ Q x éu x Oi ; E1	8E7FC 8A7GD		

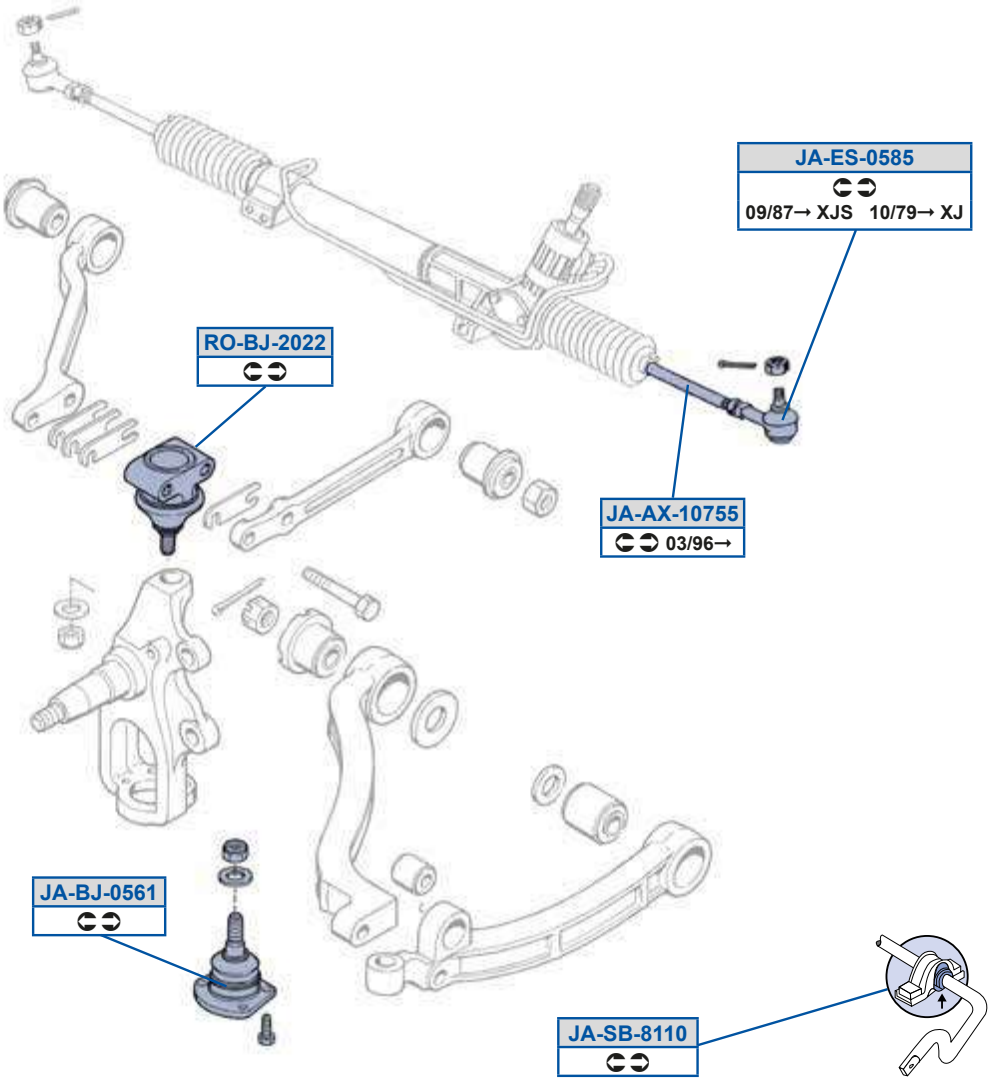

XO5Oi 598ECC
XZa B7G

XO5PX58CD9
Q89F7A3QOQGGAE

XO5Sd58CFC
XZa 87GF3XZa GDD7

XO5dP5F998
nF8GDGE

c_5PX5>8>>
Q8CFG73Q9A79B

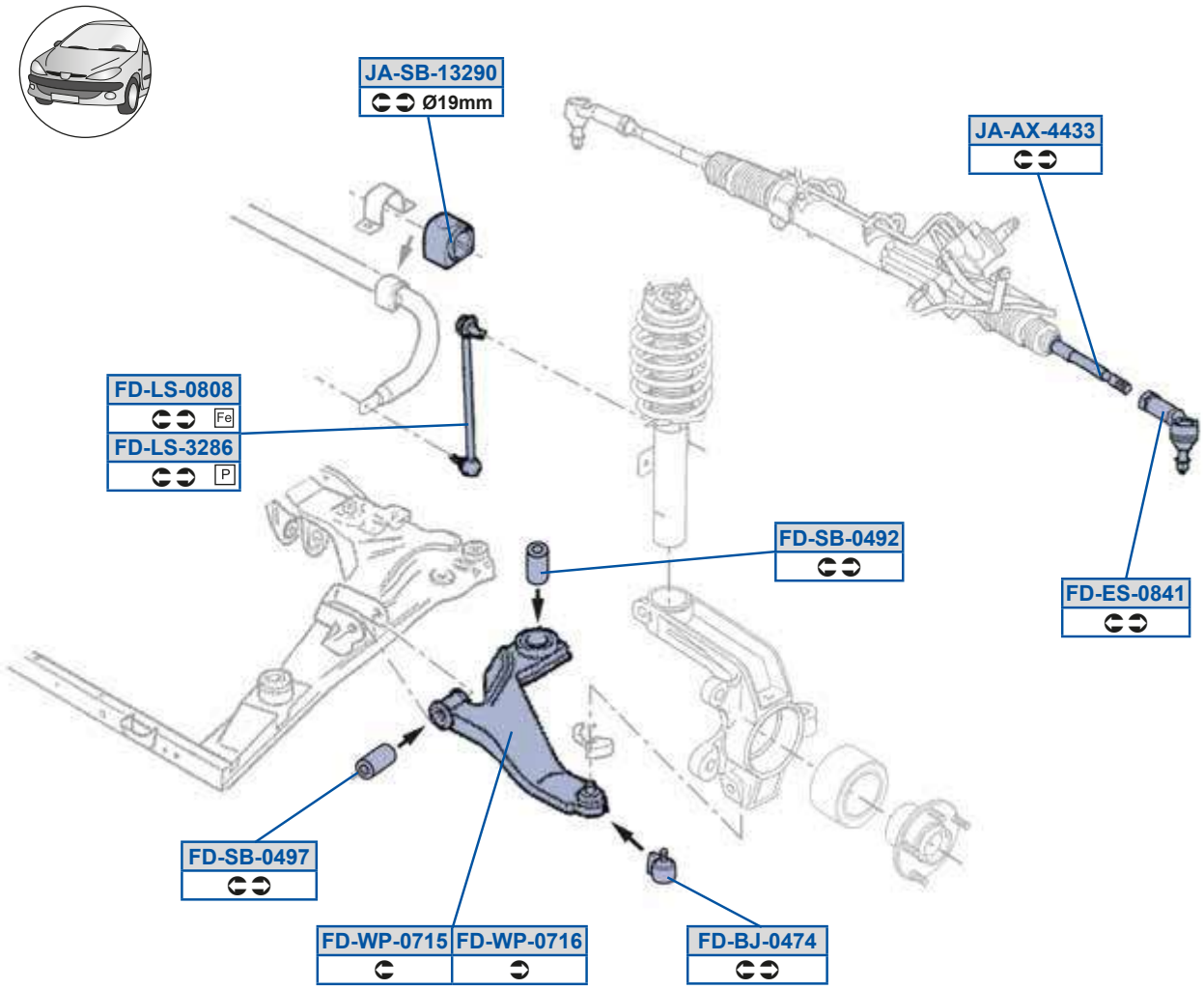
JA-SB-13290
Ø19mm
JA-AX-4433
FD-LS-0808
Fe
FD-LS-3286
P
FD-SB-0492
FD-ES-0841
FD-SB-0497
FD-WP-0715
FD-WP-0716
FD-BJ-0474

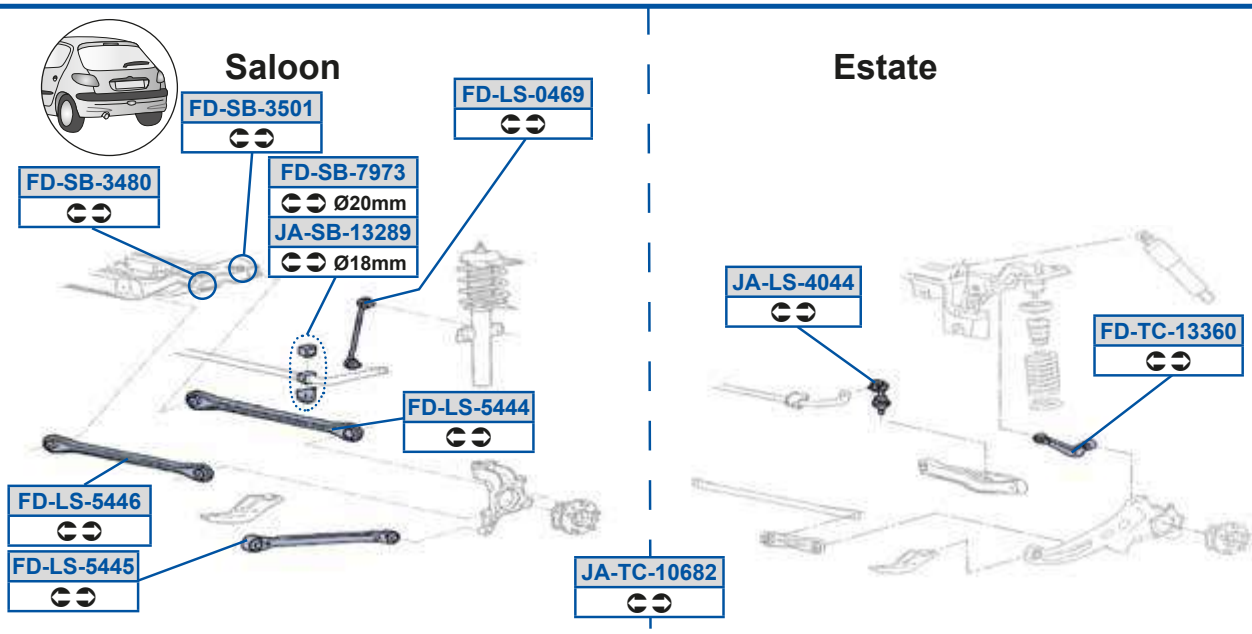
Saloon
Estate
FD-SB-3501
FD-LS-0469
FD-SB-3480
FD-SB-7973
Ø20mm
JA-SB-13289
Ø18mm
JA-LS-4044
FD-TC-13360
FD-LS-5444
FD-LS-5446
FD-LS-5445
JA-TC-10682

TR5PX58BEB
897AG9A /40 897AG9B /40

TR5dP58BG>
Q9oAGDD83Q9oAGDD8o9

XO5Oi 5BBAA
8 BAA977OT38 BAA977PT

TR5Sd58FB9
Q9o8978A3Q9oBEACE

TR5dP58BGE
Q9oAGDD83Q9oAGDD8o8

XO5Zd5B8BB
Q9o9BDGF3Q9oB7E7G

TR5Zd58BDG
888EF773889EDBF

TR5dP5ABF8
8B7BGED

XO5dP59A>FG
Q9o879AB3Q9oC89DB

TR5Zd58F8F
888EDGF3889EDBD

TR5dP5AC89
8B7BGEE

XO5dP59A>G8
Q9oC89CF

TR5Zd5A>FD
Q9o9DFFA3Q9oAGCC9

TR5dP5EGEA
889BB8F38oE8BO7AERQ

XO5eQ598DF>
Q9o8GDDG3Q9o97EB8

TR5Zd5CBBB
888FG9738oE8CYDC9OQ

TR5eQ59AAD8
Q9oAGBFB

TR5Zd5CBBC
897DBEB38oE8CYFGFOT

TR5h a58E9C
888DCEG388AGG9F

TR5Zd5CBBD
888EFCG3888FG98

TR5h a58E9D
Q9oAGDD8

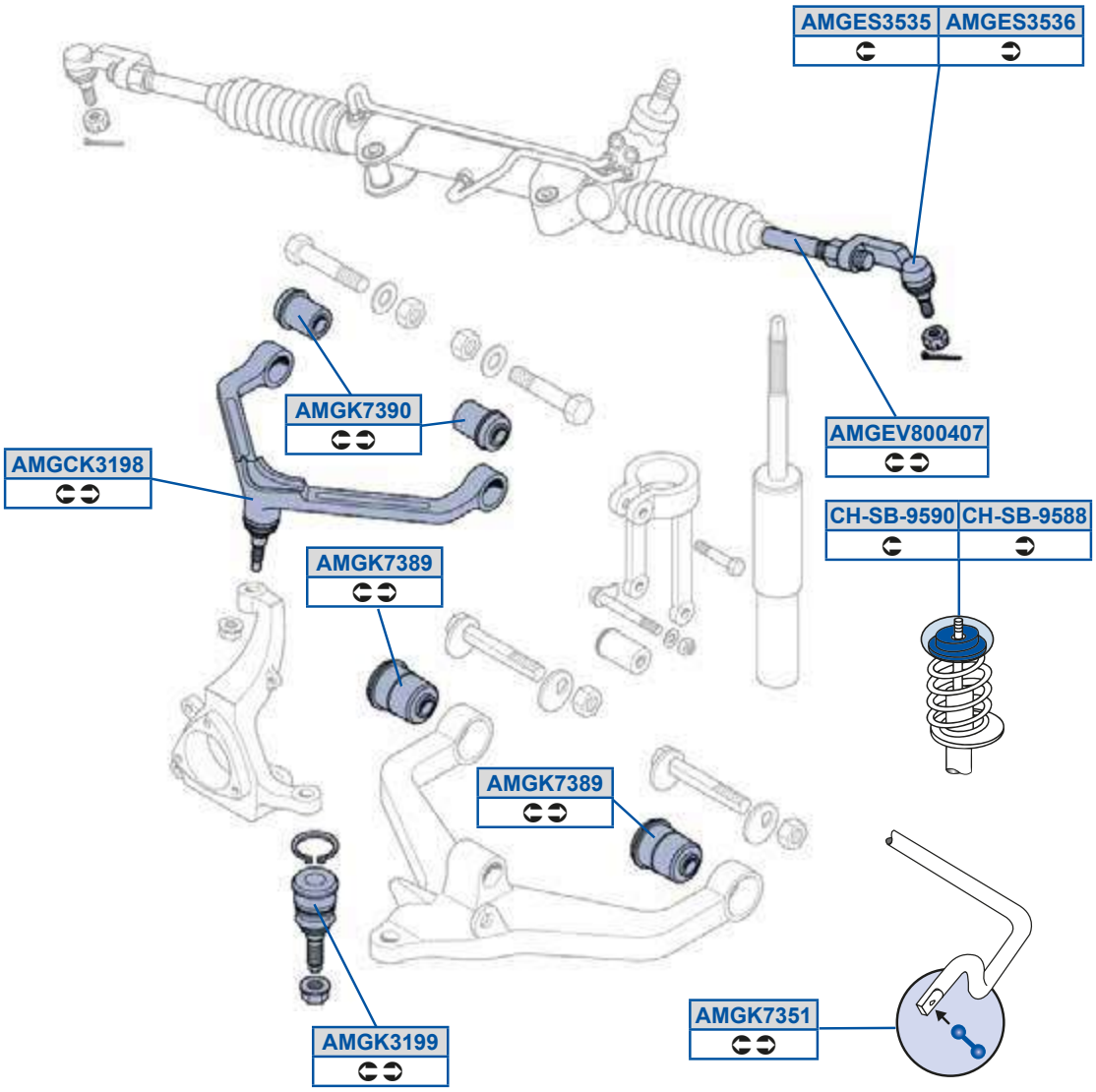
AMGES3535
AMGES3536
AMGK7390
AMGEV800407
AMGCK3198
CH-SB-9590
CH-SB-9588
AMGK7389
AMGK7389
AMGK3199
AMGK7351

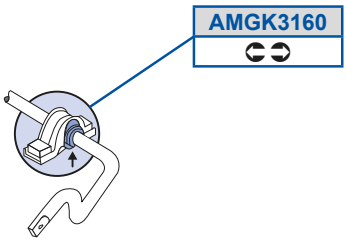
AMGK3160

O[UQYA9GF
C97FFDA900

O[UYEAG8
C97FFDAB0P

O[USdACAC
C7E9BBC003C989FC9800

QV5dP5GCFF
C989FCA900

O[USdACAD
C7E9BBB003C989FC9700

QV5dP5GCG8
C989FCAA00

O[USgF88B8E
C989FC8E00

O[UYA9D8
C97787G73C97788BC

O[UYA9GG
C7DG8D8OP3C88B7AEOP

O[UYEAC9
C97AFGEC

O[UYEAFG
C97FFDBGOQ

Uc0] R QVSc_YSS W0h X4h U1	8G7GF 8G78C		

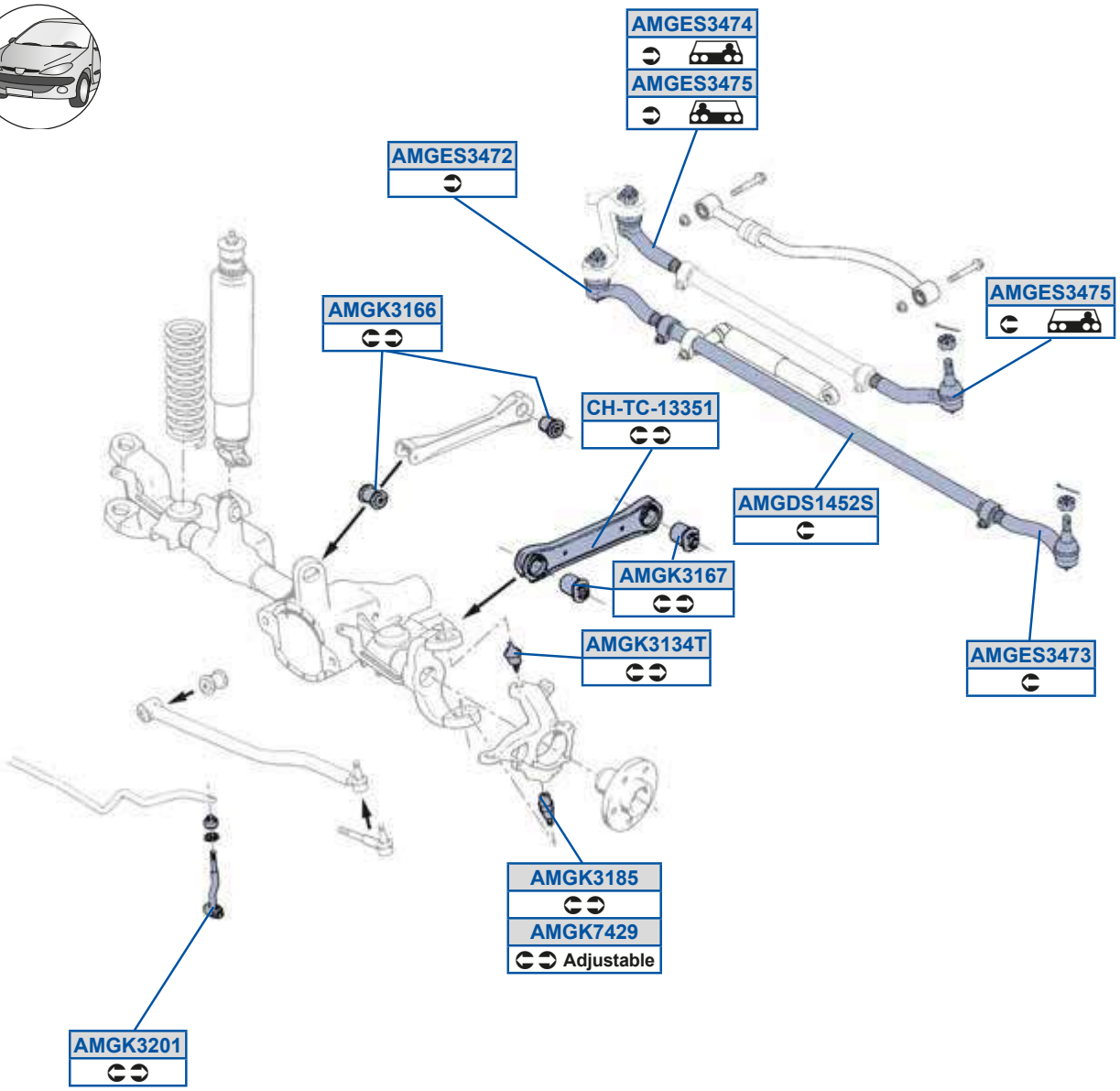

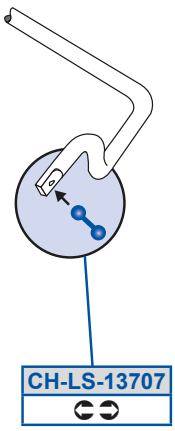

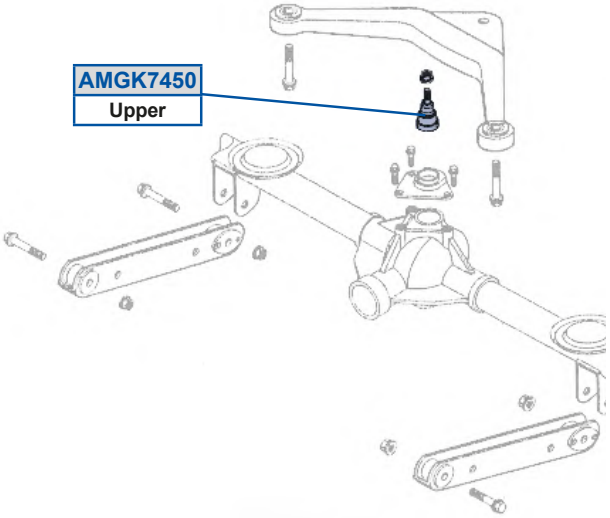

O[URd9BC>d
C97FFFE80P

O[USdABE>
C97FFFE70P

O[USdABEA
C97FFFEG00

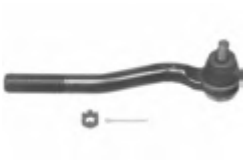

O[USdABEB
C97FFBD8

O[USdABEC
C97FFC88

O[UYA9ABe
FGFAC77979

O[UYA9DD
C97FEE7G

O[UYA9DE
C97FF8DE

O[UYA9FC
C789BA9003DF77B7FC00

O[UYA>89
C97FF9FA

O[UYEB>G
C789BA9003DF77B7FC00

O[UYEBC8
C97FFF7F0P

QV5Zd59AE8E
C97FFA8G0P

QV5eQ59AAC9
C97FF98E0P3C97FF98E0R

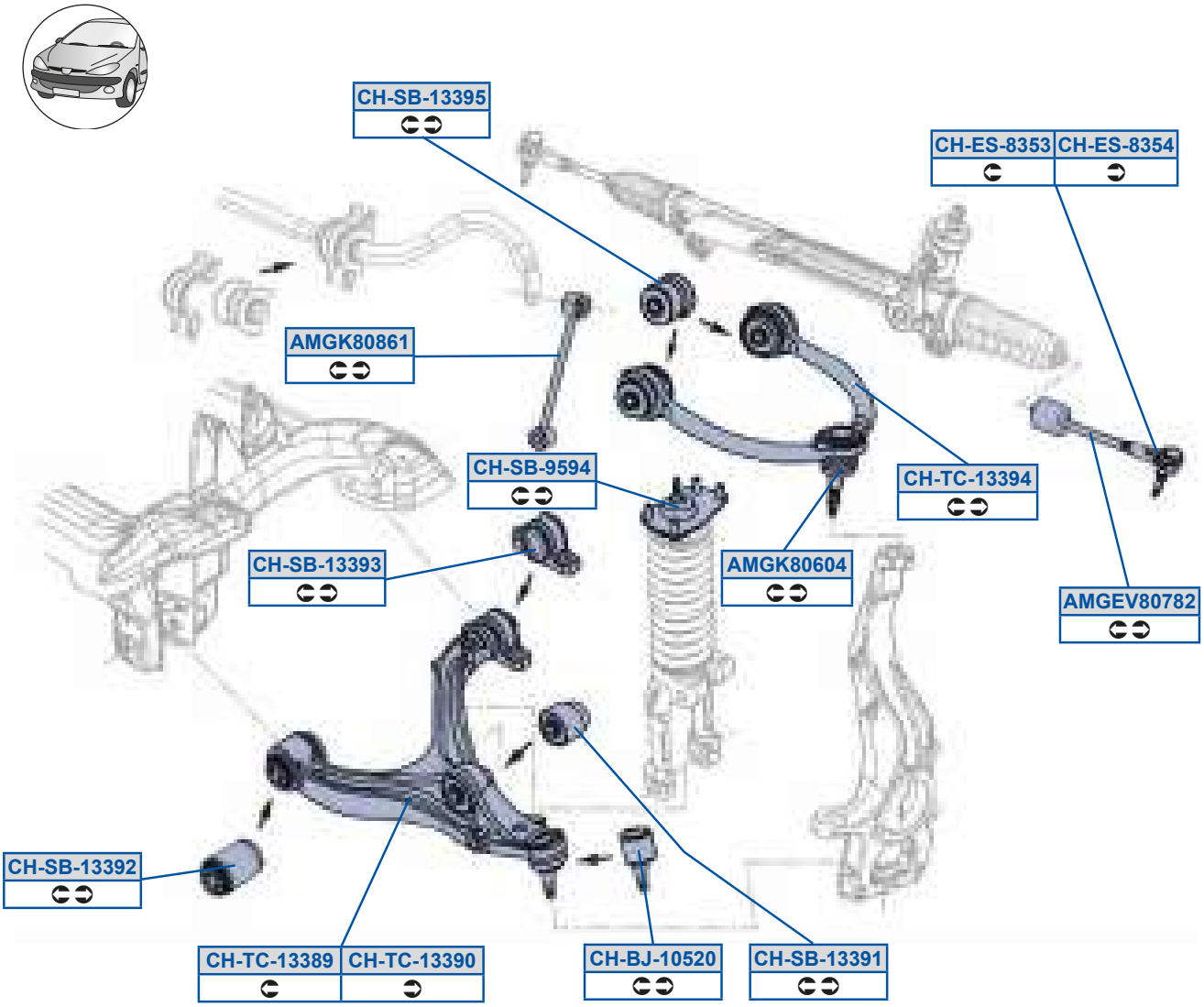
CH-SB-13395
CH-ES-8353
CH-ES-8354
AMGK80861
CH-SB-9594
CH-TC-13394
CH-SB-13393
AMGK80604
AMGEV80782
CH-SB-13392
CH-TC-13389
CH-TC-13390
CH-BJ-10520
CH-SB-13391

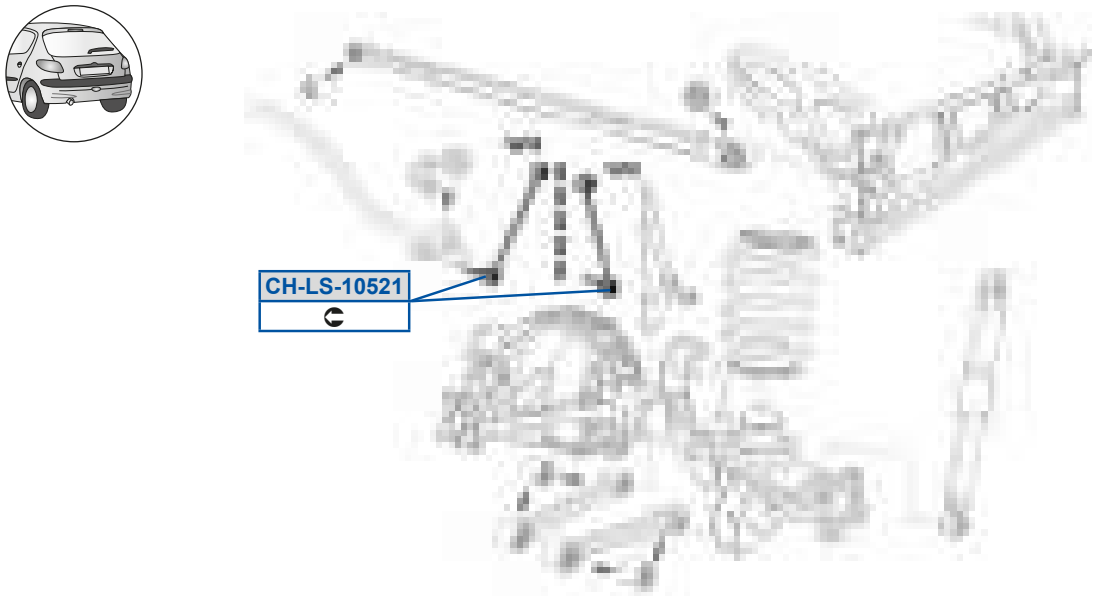
CH-LS-10521

O[USgF8EF>
C97FG9G9OQ

O[UYF8D8B
C97G797DOT

O[UYF8FD9
C97FGBDEOP

QV5PX598C>8
C8ACDC8OP3C8ACDC8OQ

QV5Sd5FACA
87C8BACCCOQ

QV5Sd5FACB
87C8BACCDOQ

QV5Zd598C>9
C97FGBFDOQ3C97FGBFDOR

QV5dP59AAG9
C97FGGF7OR /40

QV5dP59AAG>
C97FGGF7OR /40

QV5dP59AAGA
C97FGGF7OR 13C97FGGF8OR 1

QV5dP59AAGC
C97G797DOT /40

QV5dP5GCGB

QV5eQ59AAFG
C97FGGF8OW

QV5eQ59AAG8
C97FGGF7OW

QV5eQ59AAGB
C97G797DOW

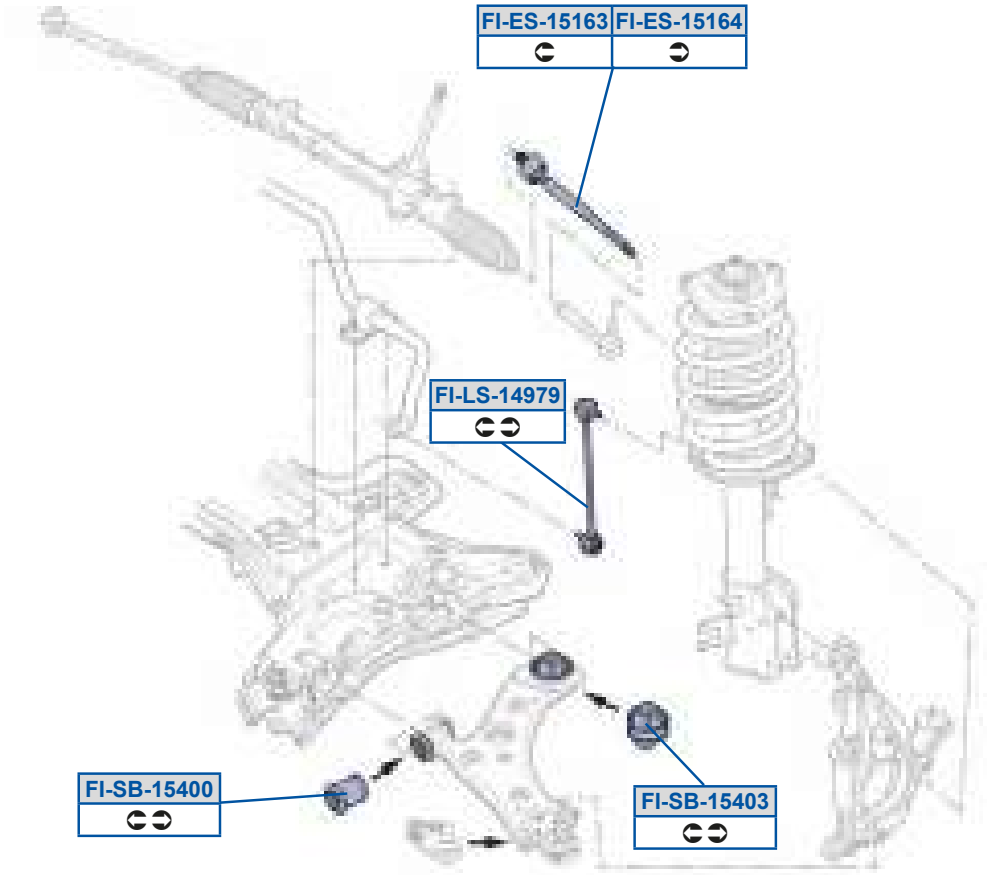

4x2

4x4

TV6Sd59C9DA
EEADDDGF

TV6Sd59C9DB
EEADDDGG

TV6Zd59BGEG
C8GAGGBG

TV6dP59CB88
C8GAGECA/4CBC8GCGF97/4C

TV6dP59CB8A
C8GAGECB/4CBC8GCGF97/4C

h c0] UZSc WW0eX1	8F7GD 9; 78F		

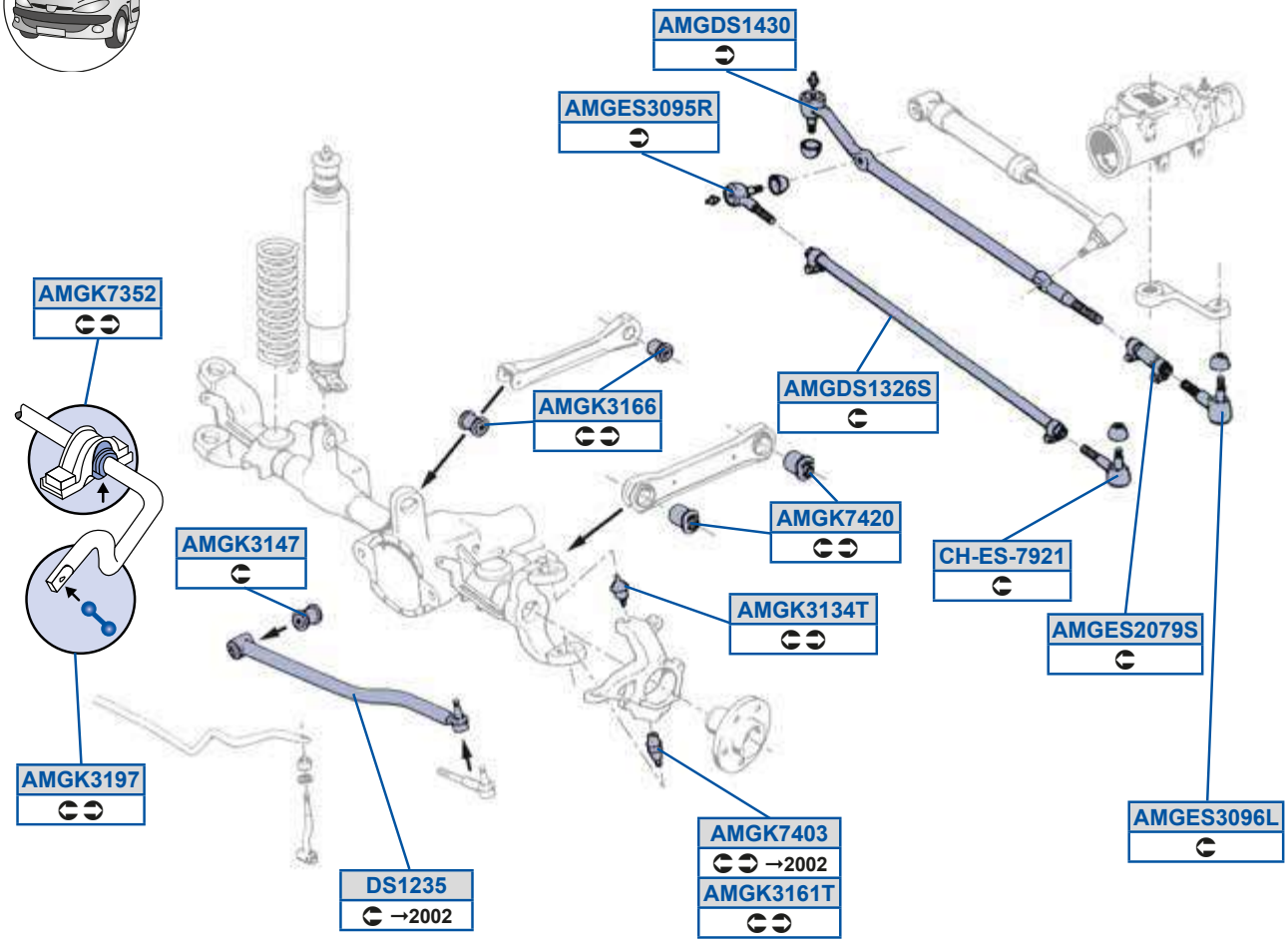

O[URd9BA8
C97FEFFE

O[USdA8GCc
C977CEB7

O[USdA8GDZ
C977CEAG

O[UYA9ABe
FGFAC77979

O[UYA9BE
C977AG8F

O[UYA9D9e
FAC77979

O[UYA9DD
C97FEE7G

O[UYA9GE

O[UYEAC>
C97FFAEF

O[UYEB8A
FAC77979

O[UYEB>8
C97FFBAA

QV5Sd5EG>9
C977CEB8

Rd9>AC
C977E88F3C97FFBA9

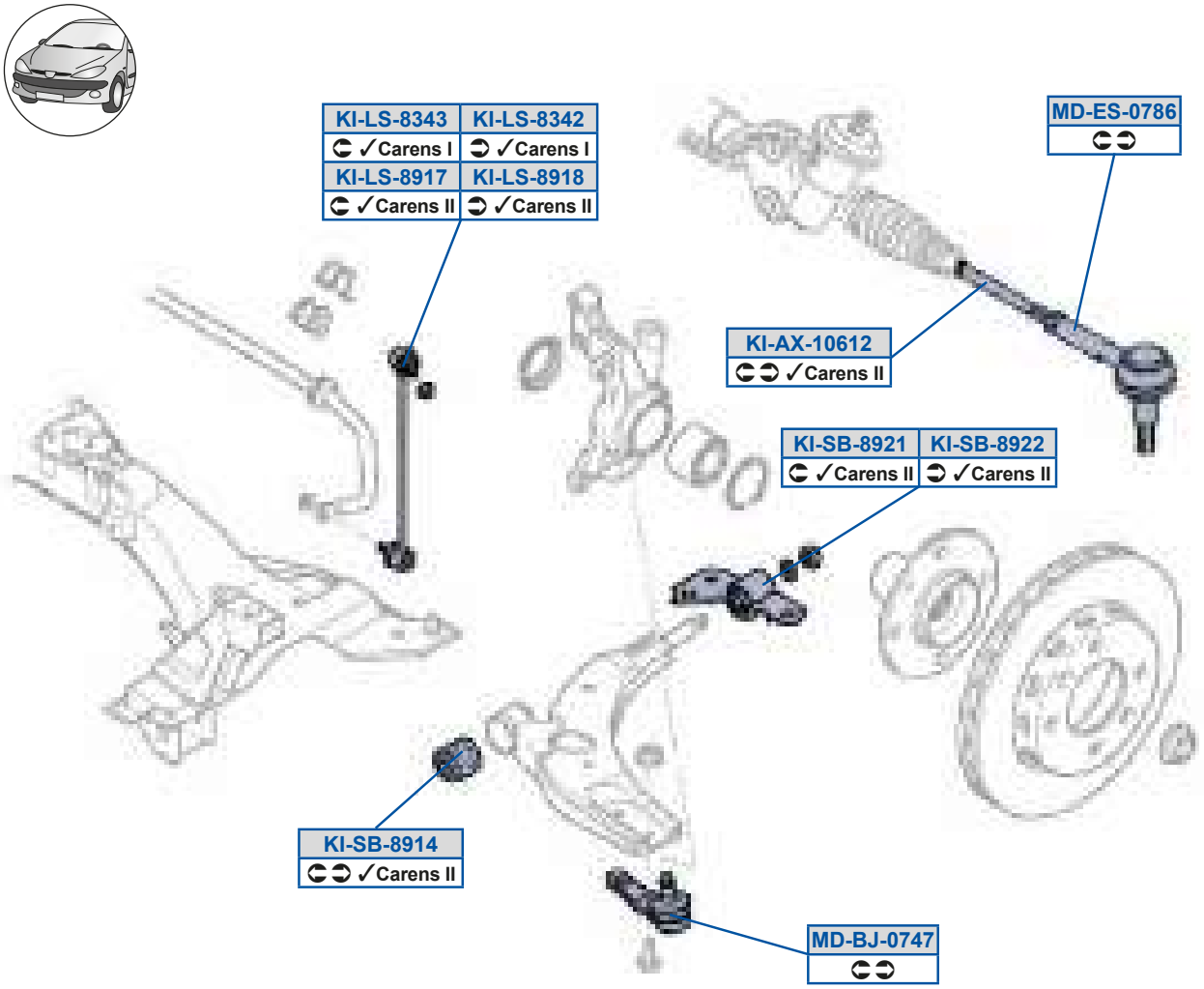
KI-LS-8343
KI-LS-8342
✓Carens I
✓Carens I
KI-LS-8917
KI-LS-8918
✓Carens II
✓Carens II
MD-ES-0786
KI-AX-10612
✓Carens II
KI-SB-8921
KI-SB-8922
✓Carens II
✓Carens II
KI-SB-8914
✓Carens II
MD-BJ-0747

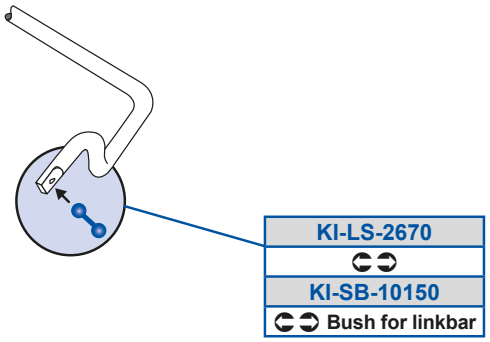
KI-LS-2670
KI-SB-10150
Bush for linkbar

YW5Oi 598D9>
7Y9TYA99B7

YW5dP5FG>9
7Y908ABBD

YW5ZZd5>DE8
7Y908AB8C7037Y908AB8C7P

YW5dP5FG>>
7Y908ABBD

YW5ZZd5FAB>
7Y9d8AB8C70

[R5PX58EBE
7Y908ABCC7037Y9T0ABCC7

YW5ZZd5FABA
7Y9d8AB8E70

[R5Sd58EFD
7Y978A99F737Y978A99F70

YW5ZZd5FG9E
7Y9T0AB8E7

YW5ZZd5FG9F
7Y9T0AB8C7

YW5dP5989C8
7Y908AB8C70 /40

YW5dP5FG9B
7Y9Q7ABBD7

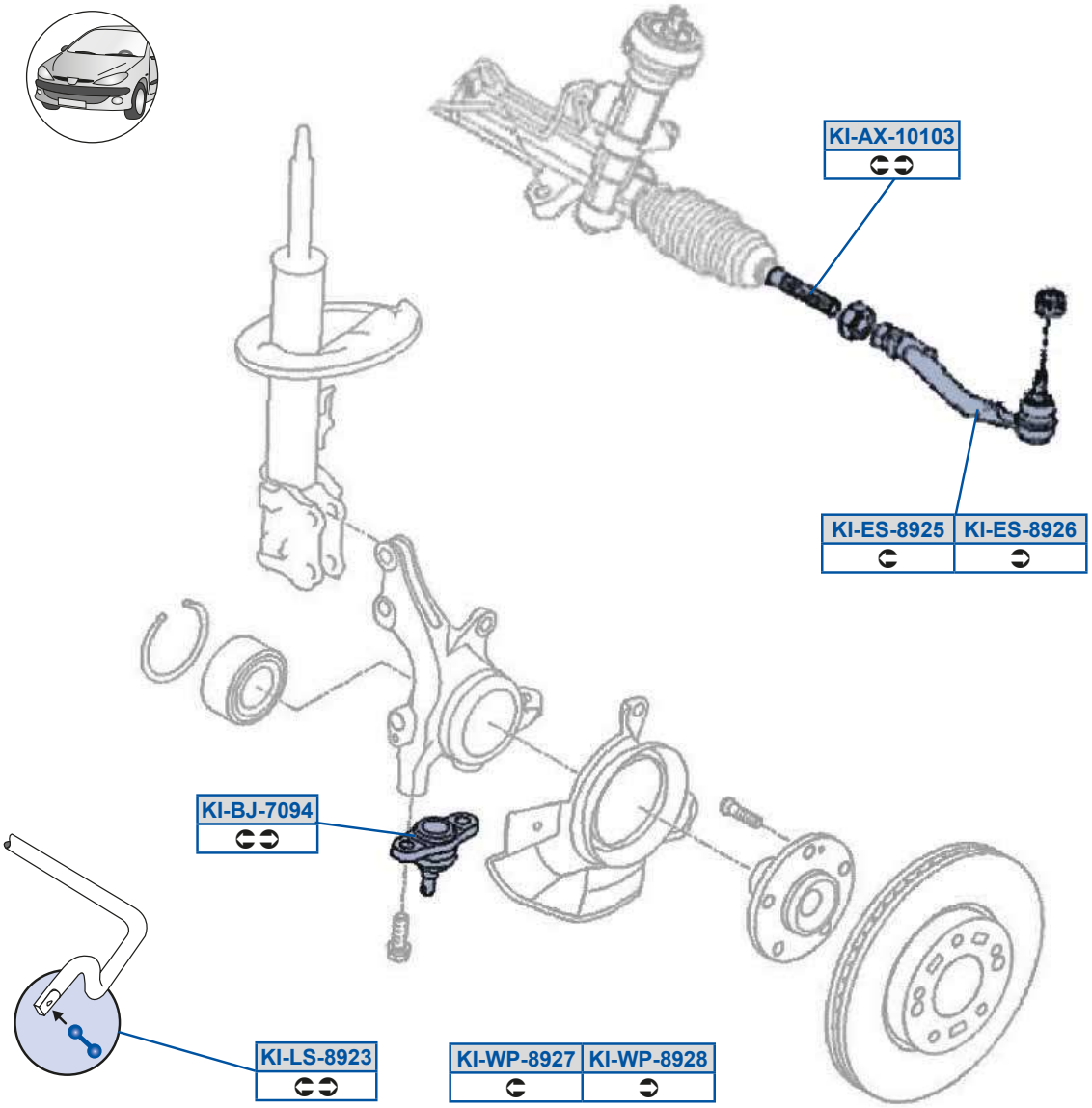
KI-AX-10103
KI-ES-8925
KI-ES-8926
KI-BJ-7094
KI-LS-8923
KI-WP-8927
KI-WP-8928

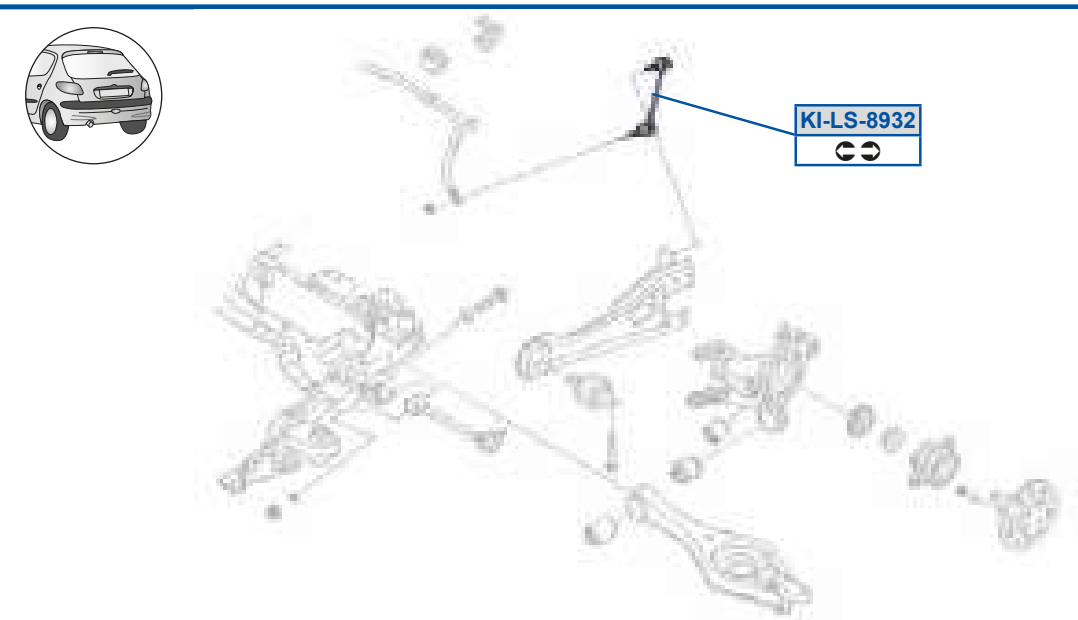
KI-LS-8932

YV5Oi 59898A
CEE9B8R7873CEE9B9U777

YV5PX5E8GB
C8ED77I 7773C8ED79U777

YV5Sd5FG>C
CDF979U777

YV5Sd5FG>D
CDF979UG77

YV5Zd5FG>A
CBFA79U777

YV5Zd5FGA>
CCCA78R777

YV5h a5FG>E
CBC778R777

YV5h a5FG>F
CBC788R777

QOc] WyOZ W0f a1	8F7GG 98789	QOc] WyOZ W0Ub1	8; 7GG 8G78E
QOc] WyOZ W0Ub17dSR_] O W0Ub1	897GG 8G78E		

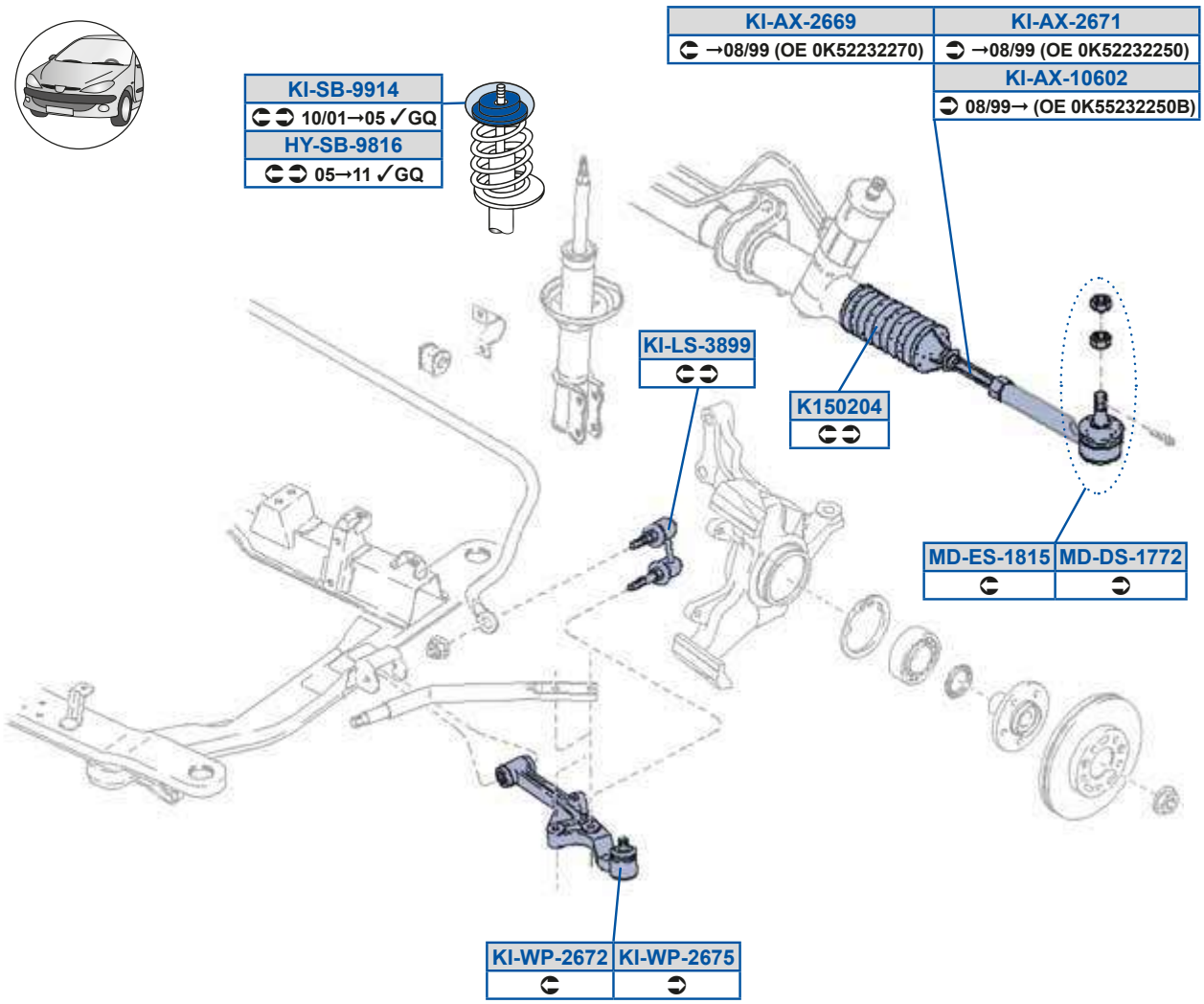

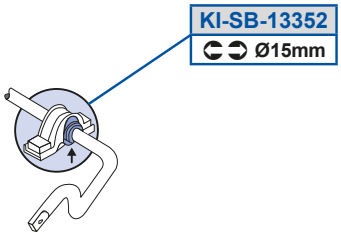

MOOG

Vj 5dP5GF9D
CBD879P7773CBD87BR777

Y9C8>8B
7YCC9A989C

YW5Oi 598D8>
7YCC9A99C7P

YW5Oi 5>DDG
7YC99A99E7

YW5Oi 5>DE9
7YC99A99C7

YW5Zd5AFGG
7YCC9AB8D7P

YW5dP59AAC>
7YCC09F8CD

YW5dP5GG9B
ZPF9ABAF7

YW5h a5>DE>
7YCC9ABAC7P37YCC9ABAC7Q

YW5h a5>DEC
7YCC9ABA77P37YCC9ABA77Q

[R5Rd59EE>
7Y978A99F7037YCC9A99F7

[R5Sd59F9C
7YCC9A99B737YCC9A99F7

QOc] WgOZ 7UcO] R QOc] WgOZ WWOgb1	8G78C	QOc] WgOZ WWOgb17dSR_] O WWOgb1	8G78C

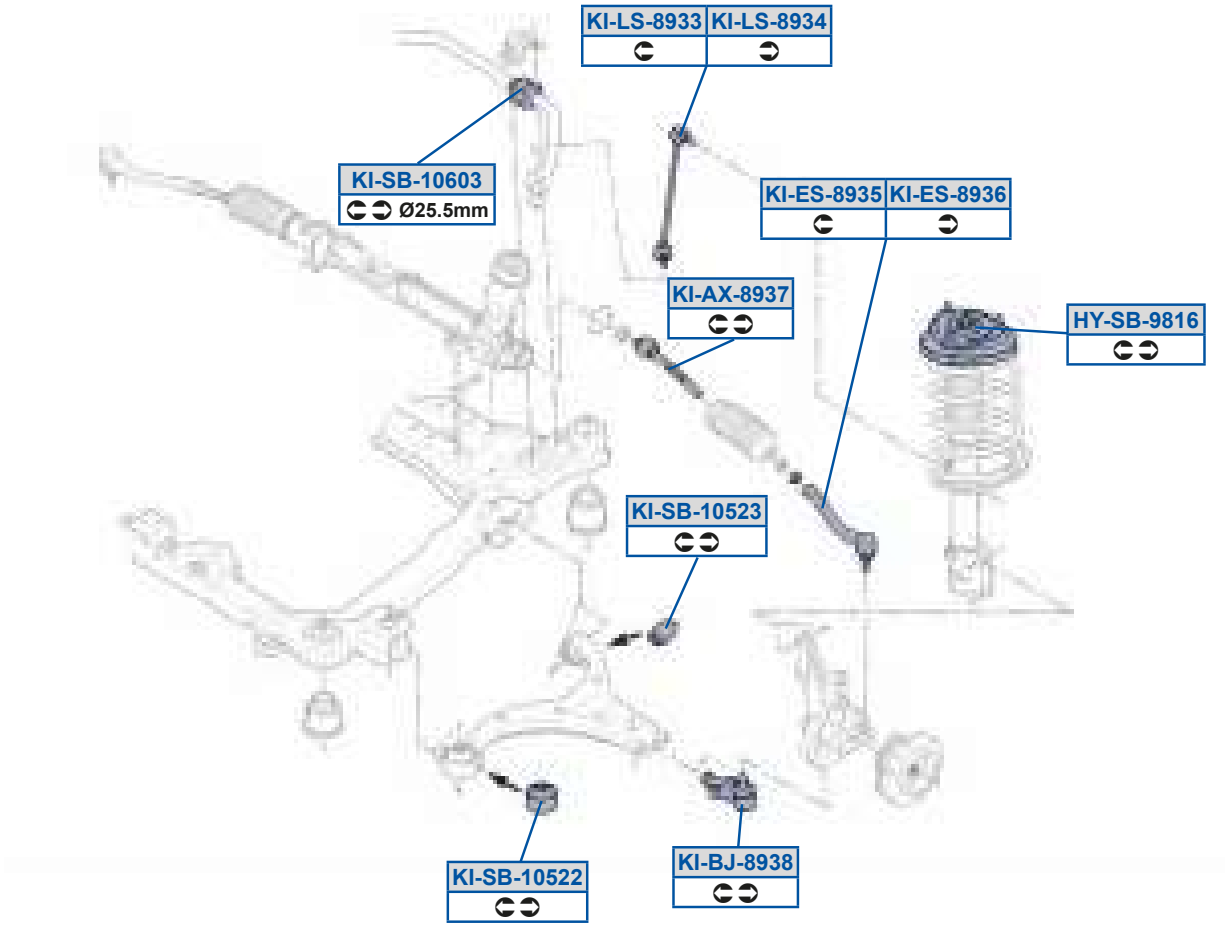

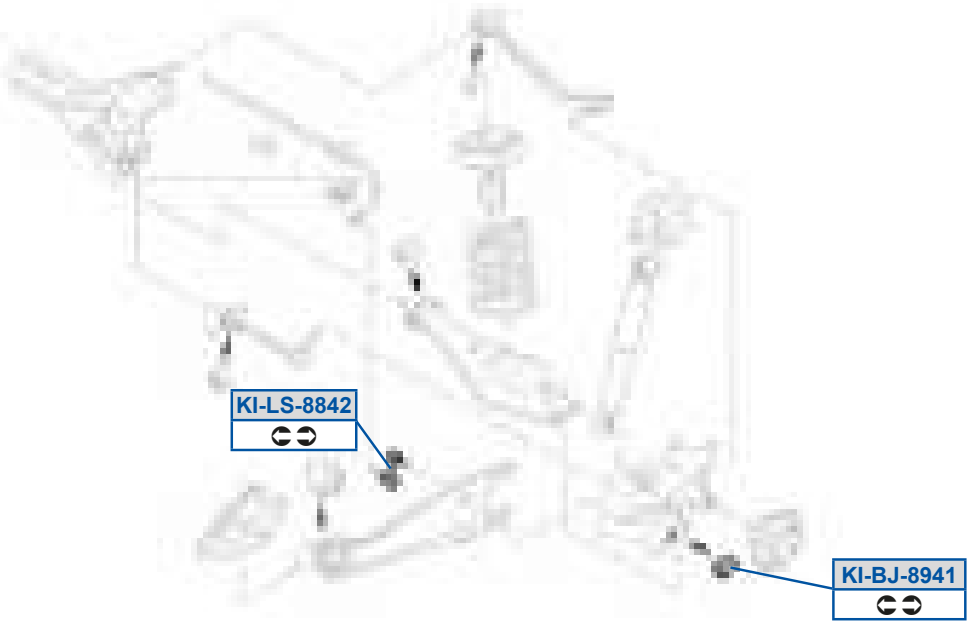

Vj 5dP5GF9D
CBD879P7773CBD87BR777

YV5Zd5FGAB
CBFB7BR777

YV5Oi 5FGAE
CEE9BBR777

YV5dP598C>>
CBCFBBR778

YV5PX5FGAF
CBCA7BR777

YV5dP598C>A
CBCC8BR778

YV5PX5FGB9
CC8A7BR777

YV5dP598D8A
CBF8ABR777

YV5Sd5FGAC
CDF97BR7773CDF97BR778

YV5Sd5FGAD
CDF97BR8773CDF97BR878

YV5Zd5FFB>
CCCA7BR777

YV5Zd5FGAA
CBFA7BR7773CCCA7BR777

QSS R Vt vÉut v 0SR1	9; 78D 9; 79;	QSS R dh 0SR1	8G78E 9; 79;
ac_ QSS R 0SR1	8; 78F 8; 79A		

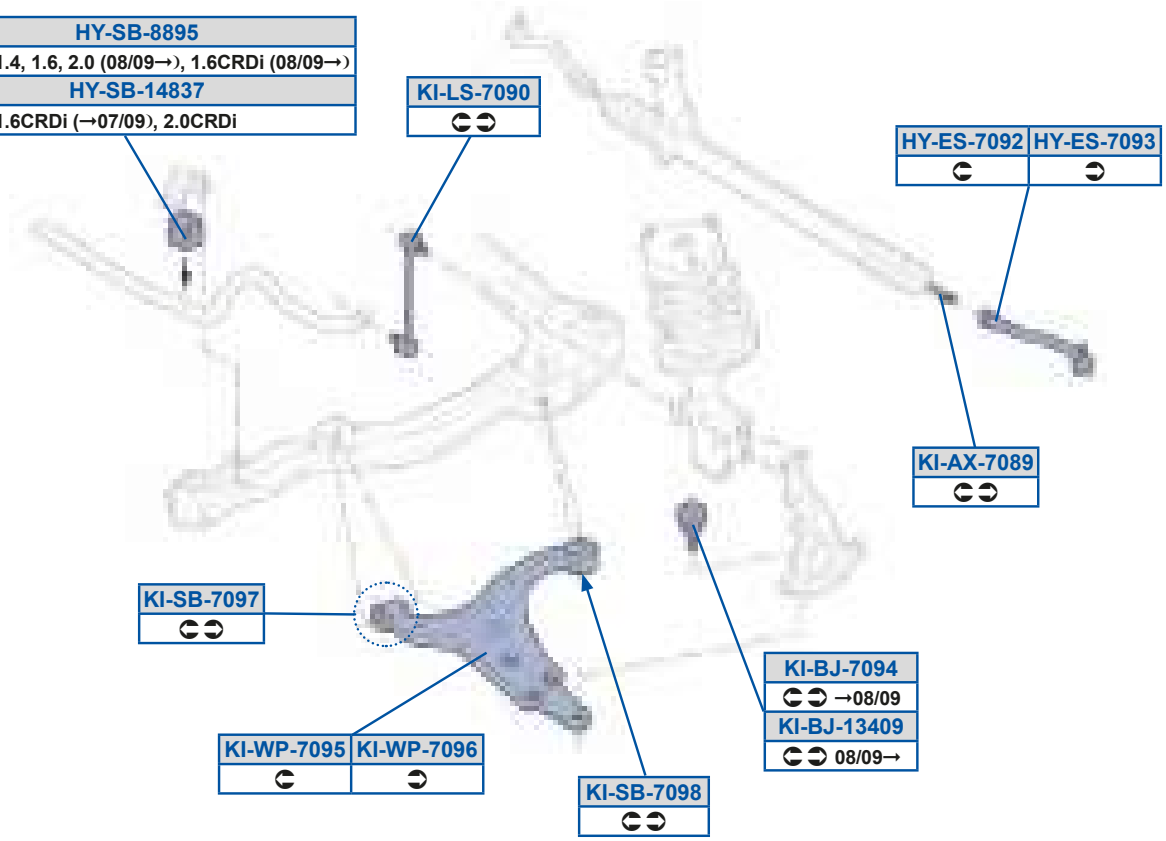

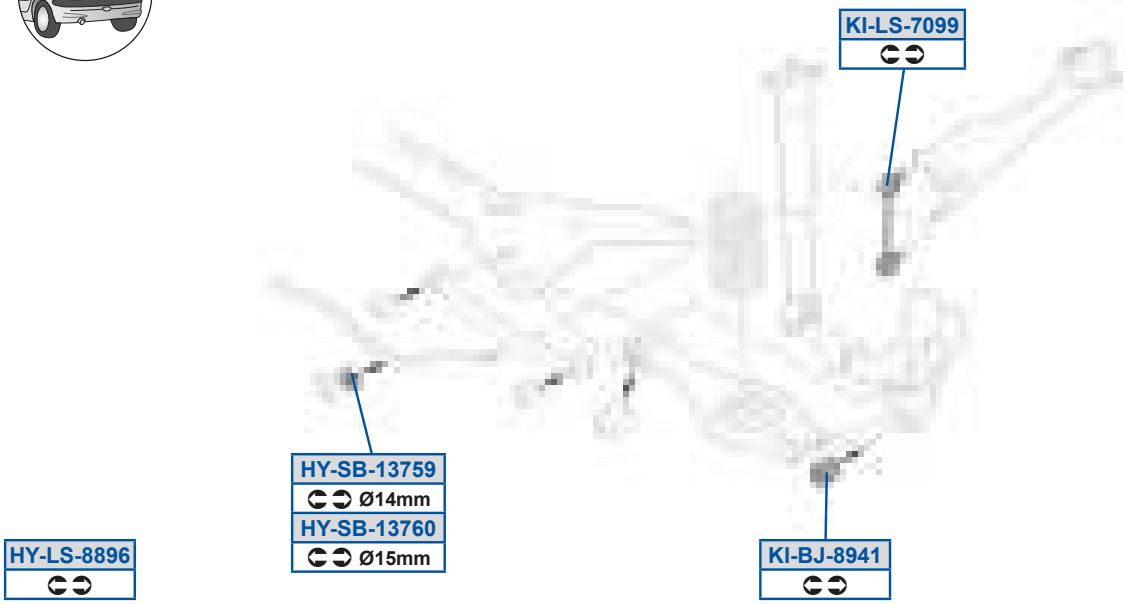

MOOG

Vj 5Sd5E8G>
CDF979V777

Vj 5Sd5E8GA
CDF979V7G7

Vj 5Zd5FFGD
CC9C78V7773CC9C79V777

Vj 5dP59AECG
CCC8AAd977

Vj 5dP59AED8
CCC8AAd877

Vj 5dP59BFAE
CBF8A48V877

Vj 5dP5FFGC
CBF8A49V777

YW5Oi 5E8FG
CDCB79V777

YW5PX59AB8G
C8ED79n777

YW5PX5E8GB
C8ED77l 7773C8ED79U777

YW5PX5FGB9
CC8A7BR777

YW5Zd5E8G8
CBFA79V7773CBFA79V877

YW5Zd5E8GG
CCCA78V7773CCCA78V877

YW5dP5E8GE
CBCC89V777

YW5dP5E8GF
CBCFB9V777

YW5h a5E8GC
CBC779V7773CBC779V877

YW5h a5E8GD
CBC789V7773CBC789V877

QSc Oe_ Vt vÉut v ŒR1	8A78B	QSc Oe_ dt ŒR1	8B78B
QSc Oe_ dt	98789 8E78B		

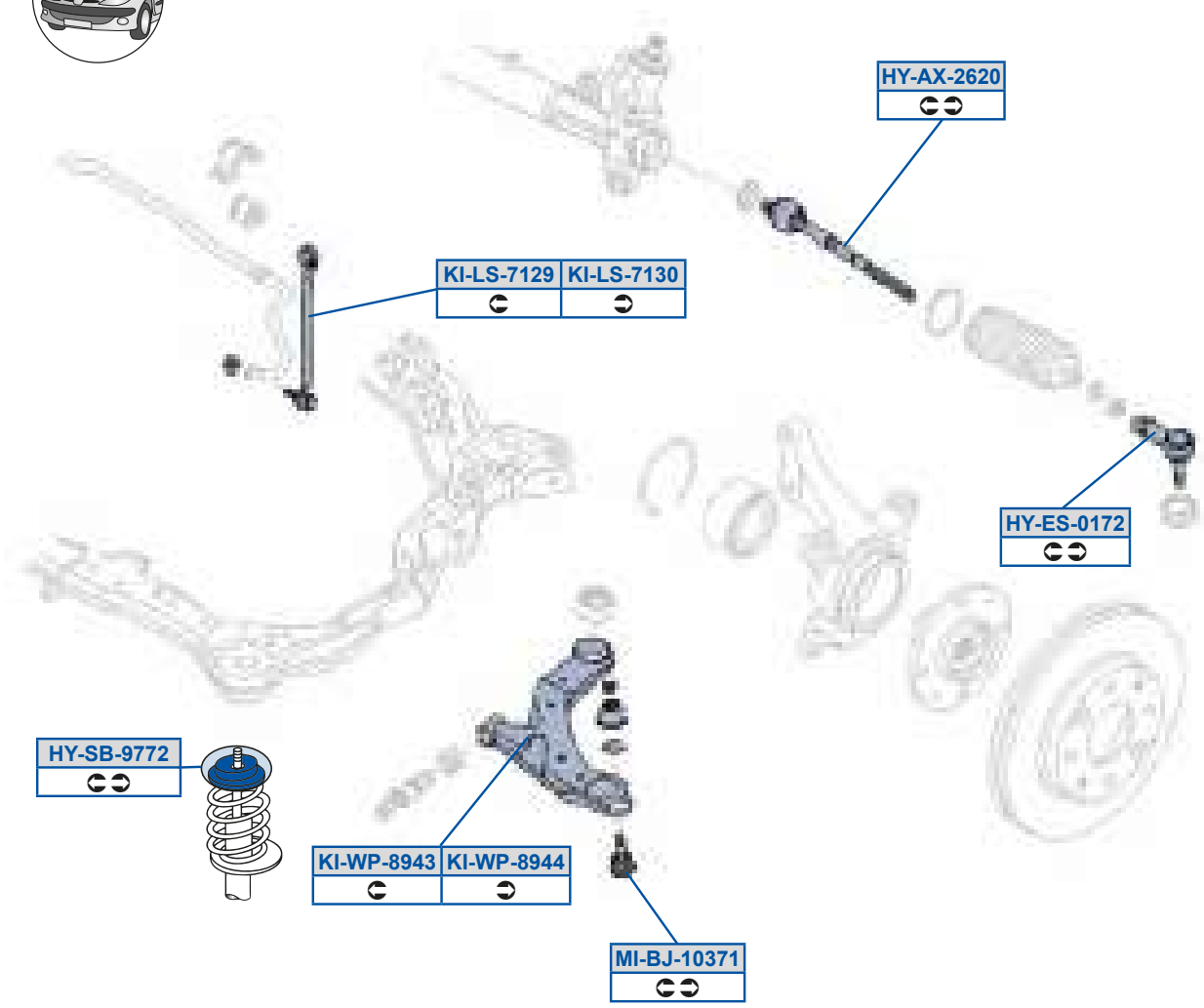

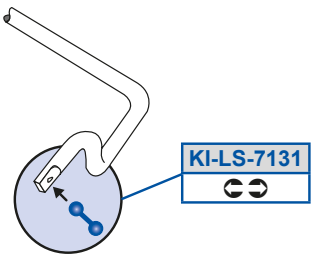

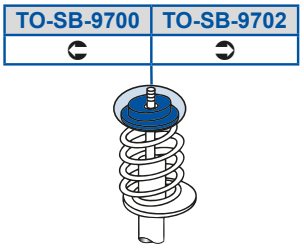

Vj 5Oi 5>D>8
CEE9B9R777

[R5Sd58EFD
7Y978A99F737Y978A99F70

Vj 5Sd589E>
CDF97997773CDF979C777

[VWPX598AE9
CBC7A990773CBC7A9C077

Vj 5dP5GEE>
CBD879G7773CBD879R777

e_ 5dP5GE88
BF7E9797B73BF7E9797B8

YWZd5E9>G
CBFA79T777

e_ 5dP5GE8>
BF7E8797B73BF7E8797B8

YWZd5E9A8
CBFB79T777

YWZd5E9A9
CCCA78E7773CCCA78E787

YWh a5FGBA
CBC779T7773CBC779T778

YWh a5FGBB
CBC789T7773CBC789T778

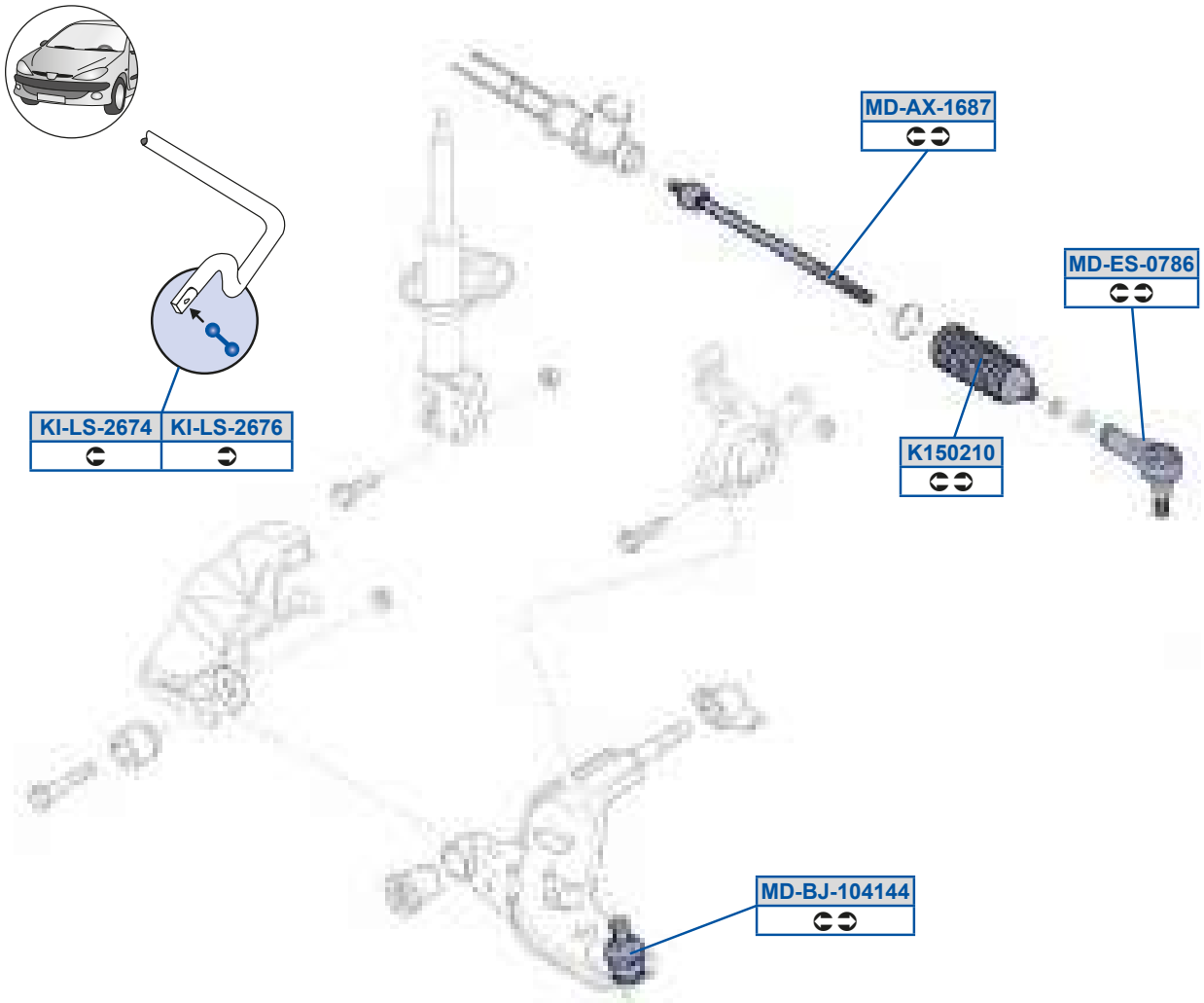
MD-AX-1687
MD-ES-0786
KI-LS-2674
KI-LS-2676
K150210
MD-BJ-104144

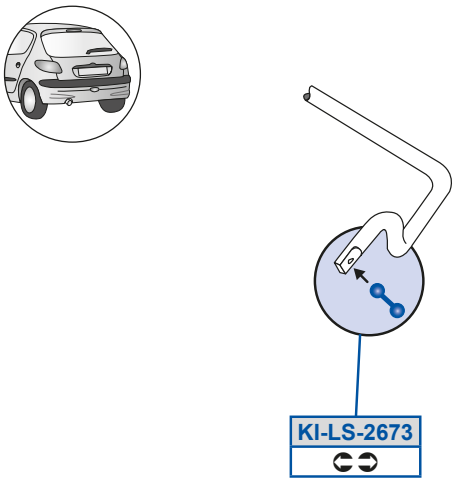
KI-LS-2673

Y9C8>98
7Y97AA989C3CEEEBBA787

YWZd5>DEA
7YG0A9F8E70

YWZd5>DEB
YU090AB8E703Z97DAB8E70

YWZd5>DED
YU090AB8C703Z97DAB8C70

[R5Oi 59DFE
7Y978A99B737Y908A99B7

[R5PX598B9BB
7U7A7ABCC7P

[R5Sd58EFD
7Y978A99F737Y978A99F70

Y; C88 0dR1	8978A	Y; E88 0dR1	987GG
Y; E88 0YD; h 1	8A7GE 8G7GG		

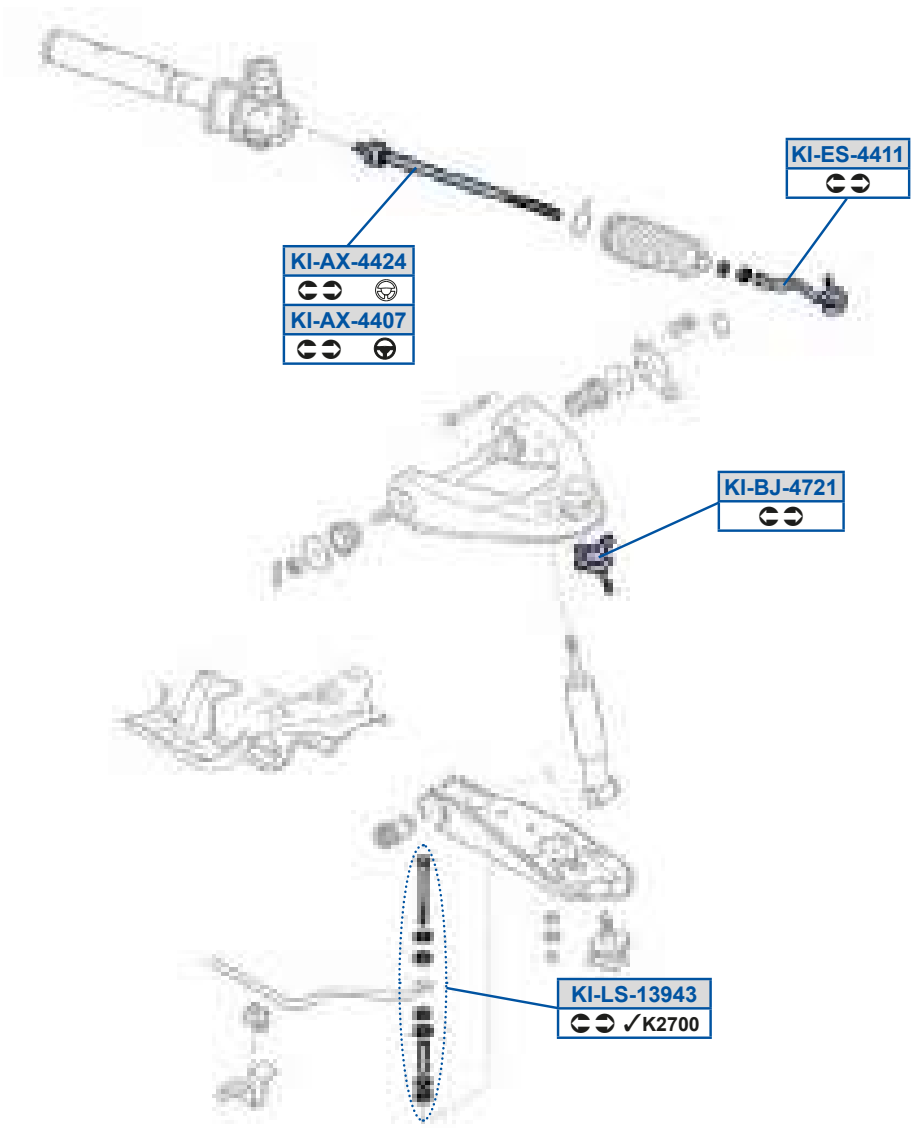

YW5Oi 5BB8E

7YD70A99E70

YW5Oi 5BB>B

7YE9A99E7

YW5PX5BE>9

7YE87ABCB7

YW5Sd5BB99

7YE87A99B73o7FAGGA9B

YW5Zd59AGBA

7Y BAAB8C737o7FCAB8C7

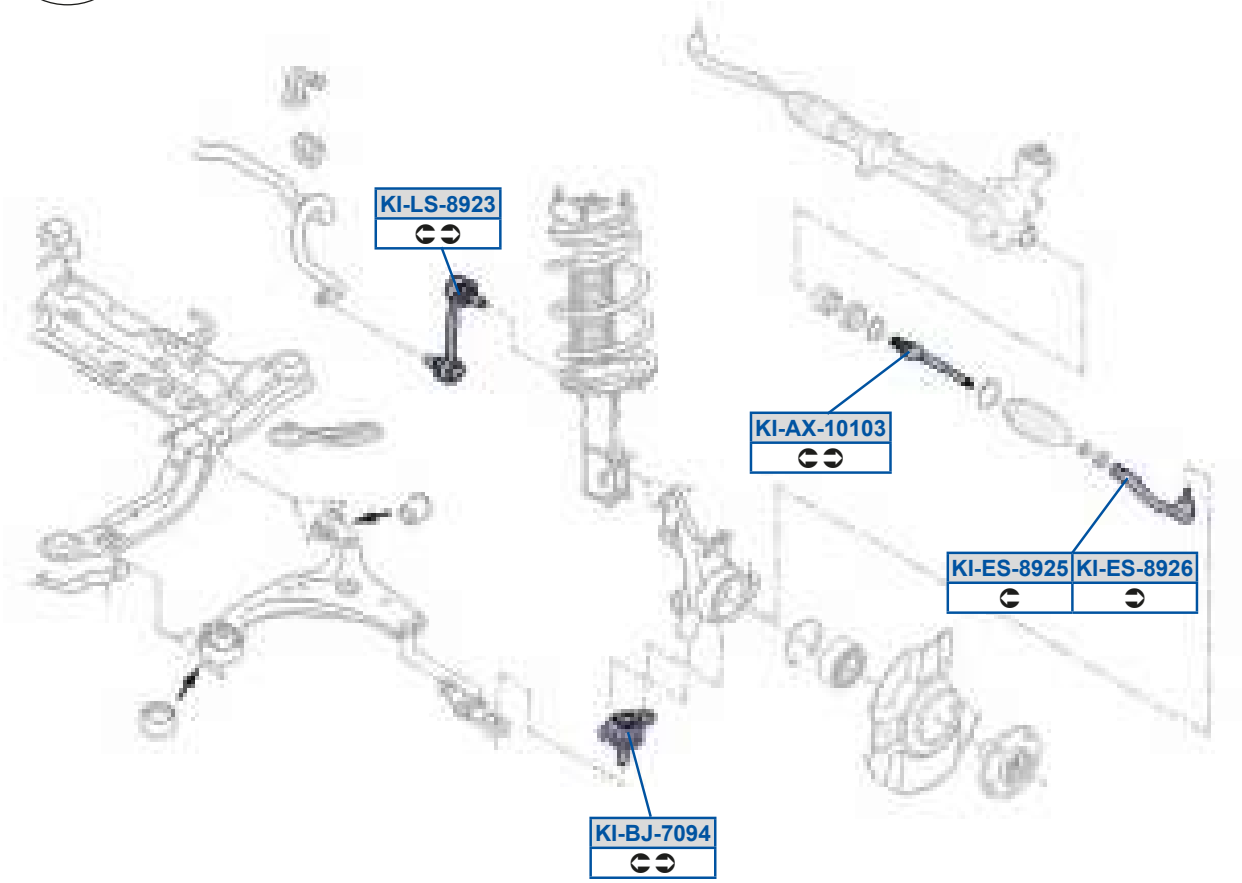
KI-LS-8923
KI-AX-10103
KI-ES-8925
KI-ES-8926
KI-BJ-7094

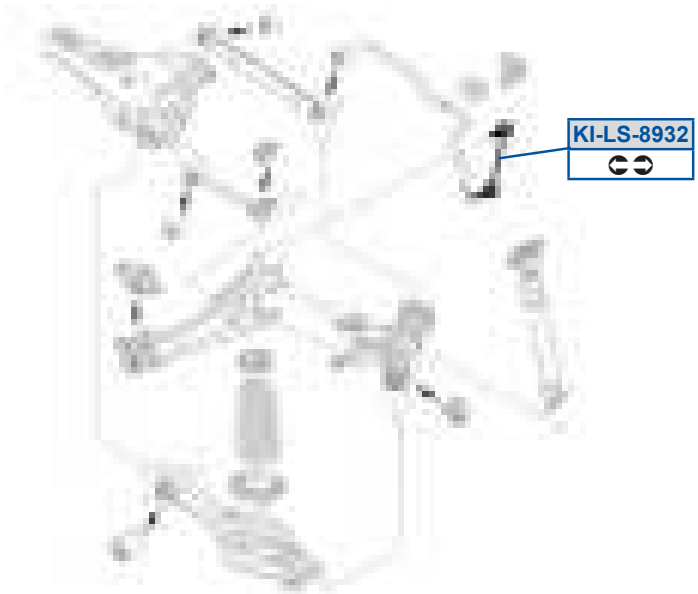
KI-LS-8932

YW5Oi 59898A

CEE9B8R7873CEE9B9U777

YW5PX5E8GB

C8ED77I 7773C8ED79U777

YW5Sd5FG>C

CDF979U777

YW5Sd5FG>D

CDF979UG77

YW5Zd5FG>A

CBFA79U777

YW5Zd5FGA>

CCCA78R777

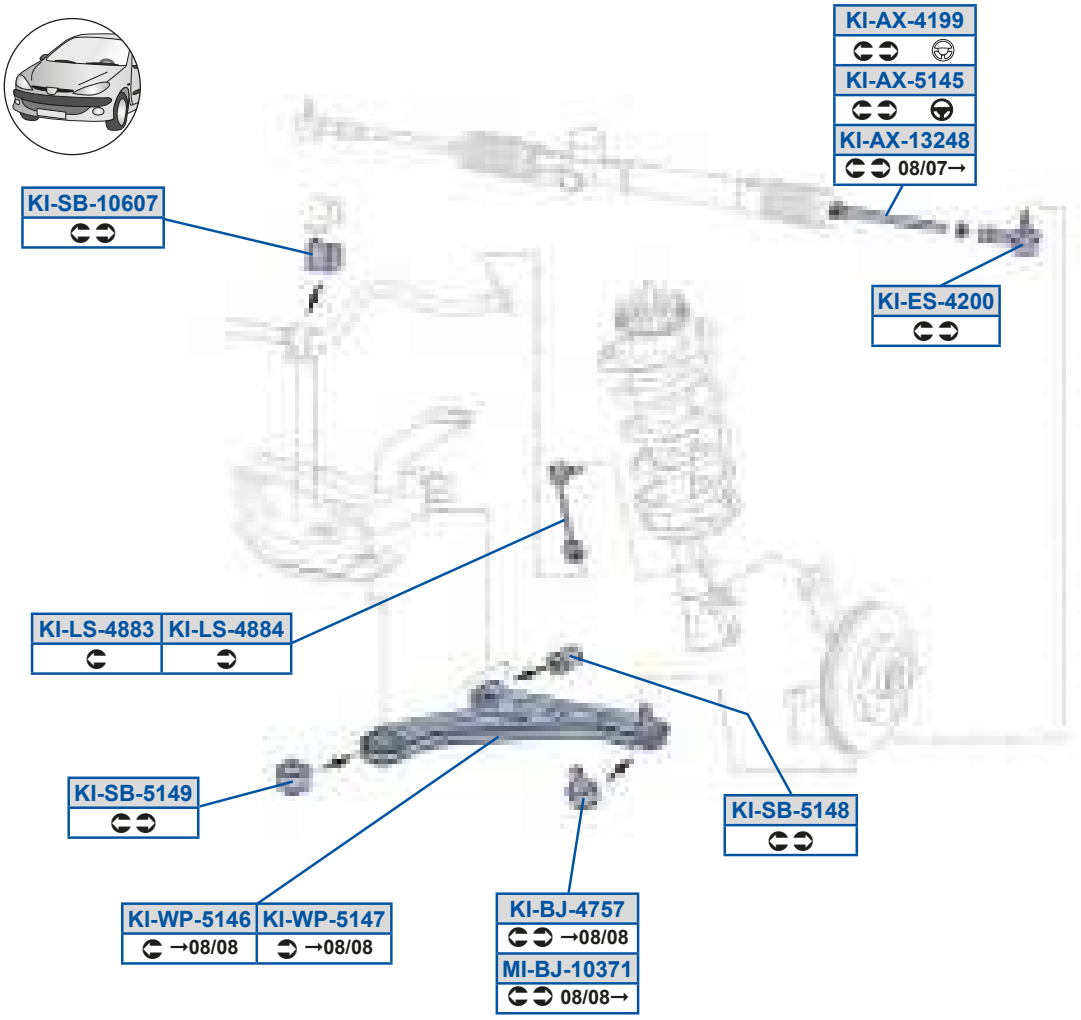
KI-AX-4199
KI-AX-5145
KI-AX-13248
08/07→
KI-SB-10607
KI-ES-4200
KI-LS-4883
KI-LS-4884
KI-SB-5149
KI-SB-5148
KI-WP-5146
→08/08
KI-WP-5147
→08/08
KI-BJ-4757
→08/08
MI-BJ-10371
08/08→

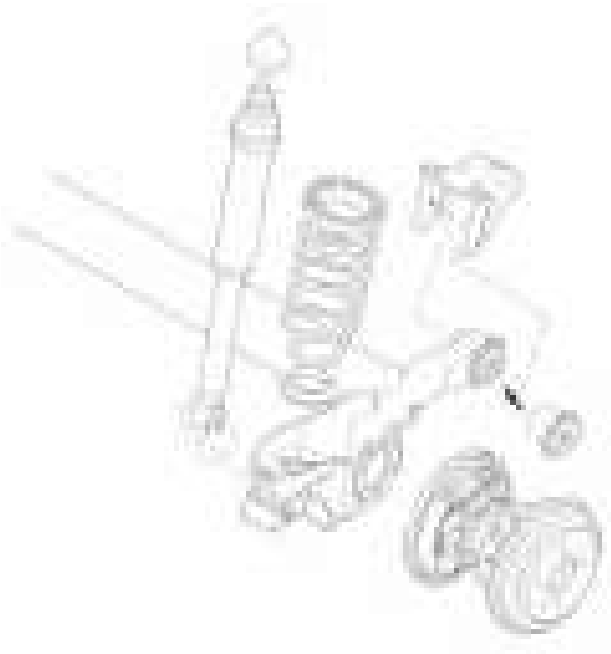

MOOG

YW5Oi 59A>BF
CDCB77ED77

YW5dP5C9BF
CBCC87E7773CBCFB7E777

YW5Oi 5B9GG
CEE9B7E7773CEE9B7E877

YW5dP5C9BG
CBCC87E7773CBCFB7E777

YW5Oi 5C9BC
CEE9B7E7773CEE9B7E877

YW5h a5C9BD
CBC777E8773CBC777E977

YW5PX5BECE
CBCA77E7773CBCA77 777

YW5h a5C9BE
CBC787E8773CBC787E8C7

YW5Sd5B>88
CDF977E7773a R C7A99F7

[W5PX598AE9
CBC7A99O773CBC7A9CO77

YW5Zd5BFFA
CBFA77E7773CBFA77 777

YW5Zd5BFFB
CBFB77E7773CBFB77 777

YW5dP598D8E
CBF897E877

ac VRS 0R01	897G8 9; 799	ac VRS S t x	8F7GG 8C789
ac VRS gt 0R01	8B7G; 8D7GG		

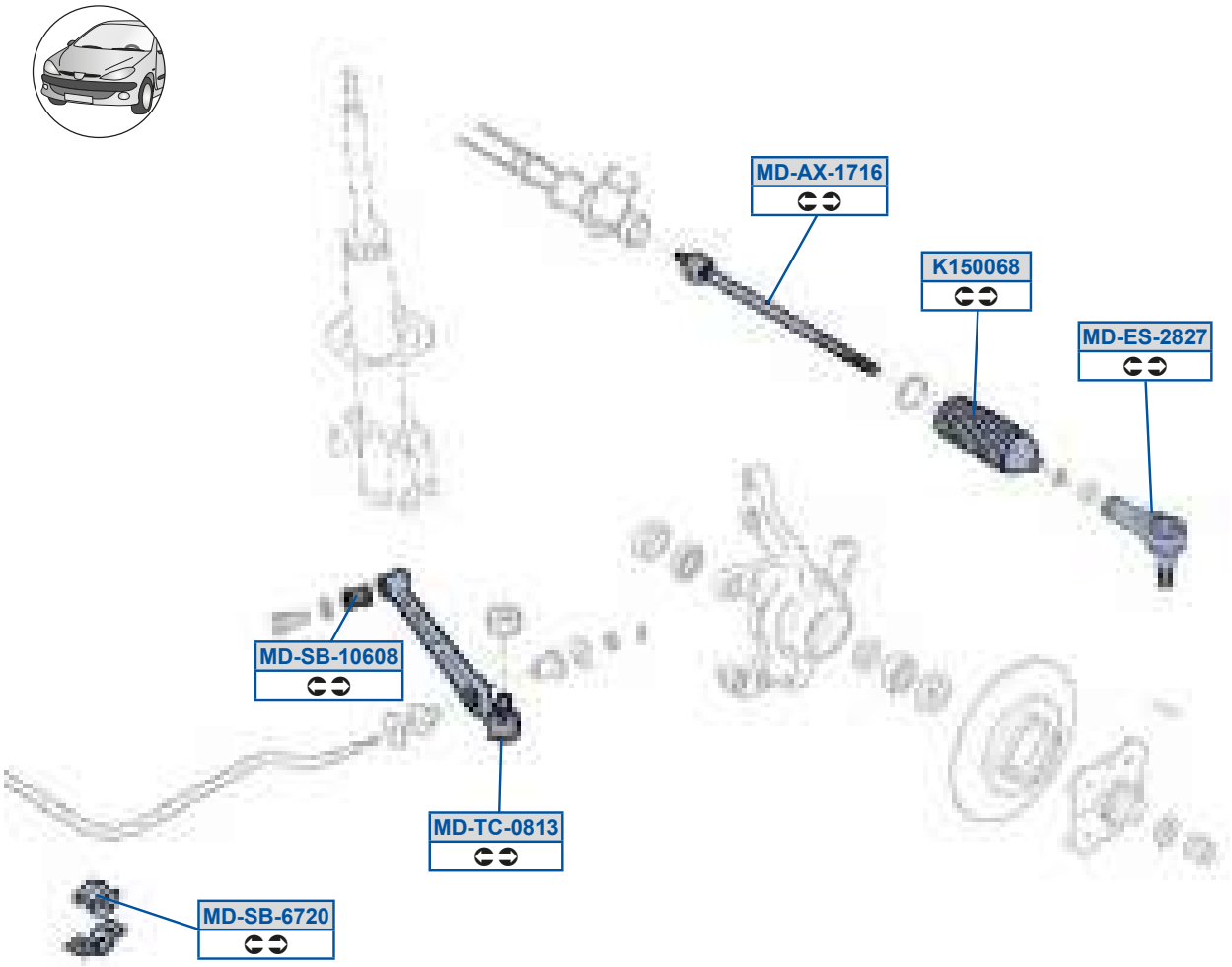

Y9C88DF

YY8C7A989C3YY8C7A989C0

[R5Oi 59E9D

YY8C7A99B7

[R5Sd5>F>E

FOP8A99F73YP7G9A99F7

[R5dP598D8F

YY 78ABBD7

[R5dP5DE>8

YY 78AB8CD0

[R5eQ58F9A

YY 78ABA873YY 78ABAG70

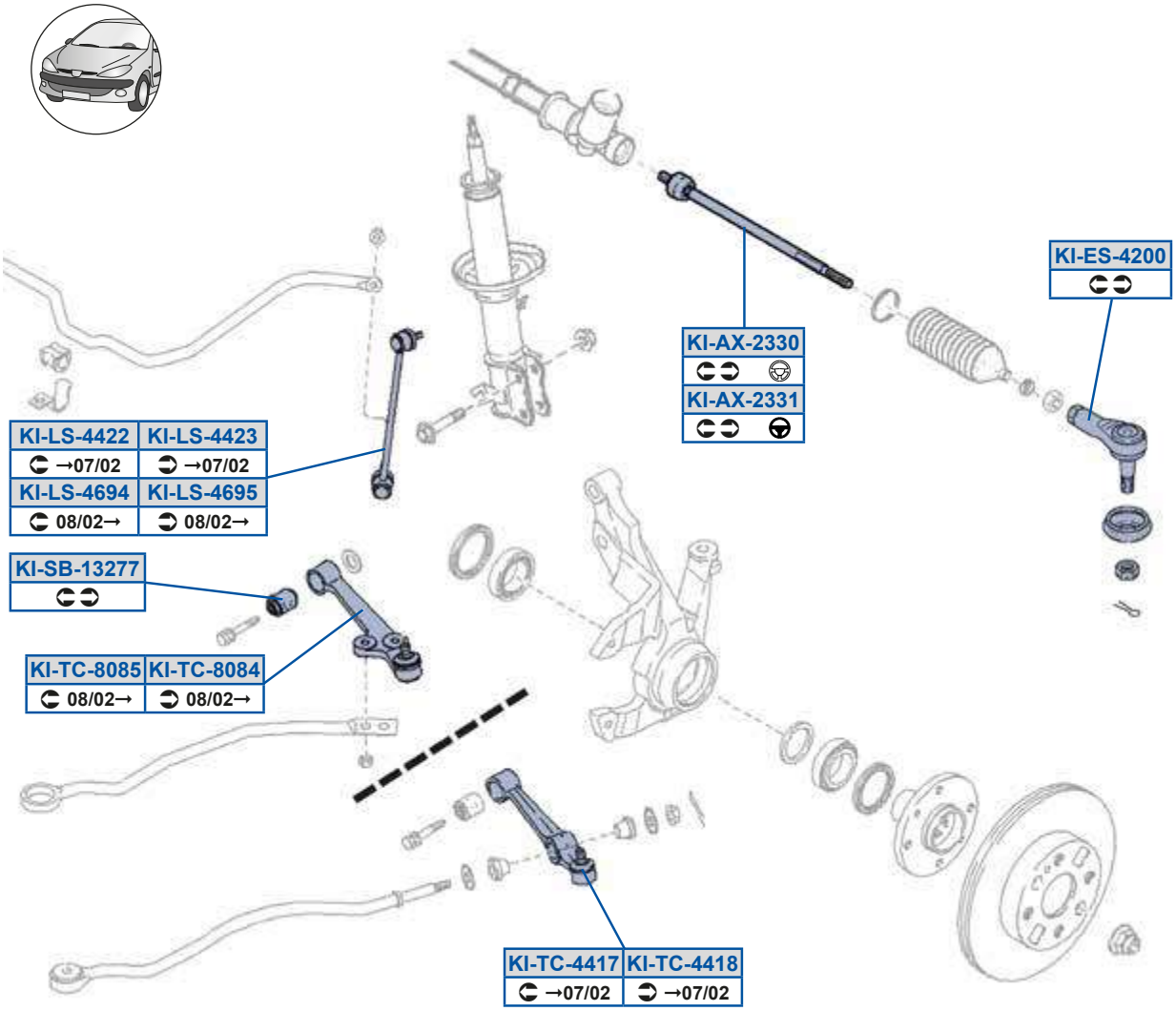
KI-ES-4200
KI-AX-2330
KI-AX-2331
KI-LS-4422
→07/02
KI-LS-4423
→07/02
KI-LS-4694
08/02→
KI-LS-4695
08/02→
KI-SB-13277
KI-TC-8085
08/02→
KI-TC-8084
08/02→
KI-TC-4417
→07/02
KI-TC-4418
→07/02

YW5Oi 5>AA8
YR C7A99B73YR C7A99B7O

YW5Oi 5>AA9
YR CAA99B73YR CAA99B7P

YW5Sd5B>88
CDF977E7773a R C7A99F7

YW5Zd5BB>>
7YAAQAB8D7O

YW5Zd5BB>A
7YAAQAB8C7O

YW5Zd5BDGB
CBF97TR777

YW5Zd5BDGC
CBFA7TR777

YW5dP59A>EE
CBC77TR777 /4O

YW5eQ5BB9E
7YA7PABAC7P

YW5eQ5BB9F
7YA7PABA77P

YW5eQ5F8FB
CBC78TR777

YW5eQ5F8FC
CBC77TR777

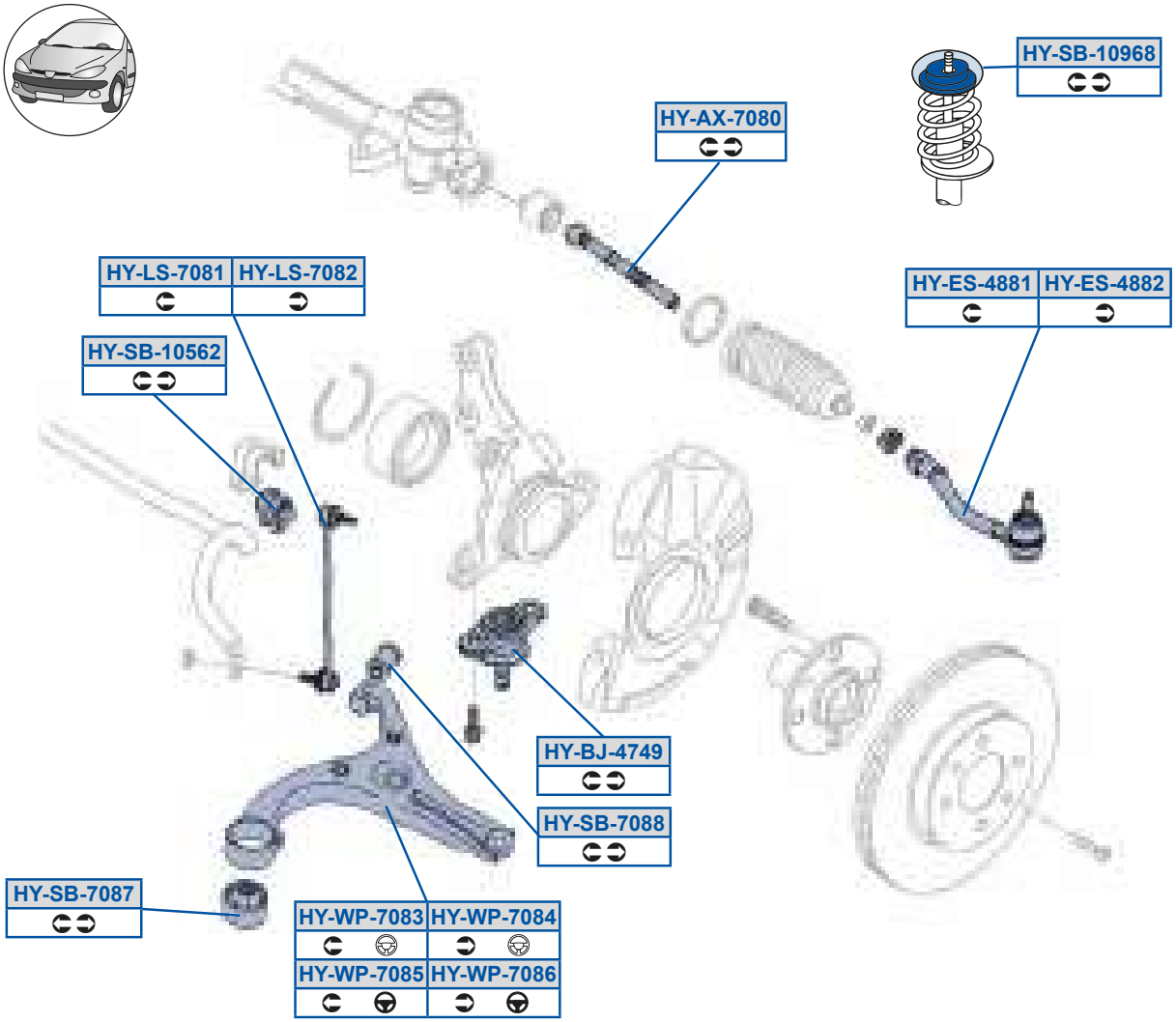
HY-SB-10968
HY-AX-7080
HY-LS-7081
HY-LS-7082
HY-ES-4881
HY-ES-4882
HY-SB-10562
HY-BJ-4749
HY-SB-7088
HY-SB-7087
HY-WP-7083
HY-WP-7084
HY-WP-7085
HY-WP-7086

Vj 5Oi 5E8F8
CEE9B8S777

Vj 5dP5E8FE
CBCFB8U777

Vj 5PX5BEBG
C8ED78U777

Vj 5dP5E8FF
CBCC88S777

Vj 5Sd5BFF9
CDF978S777

Vj 5h a5E8FA
CBC778S877

Vj 5Sd5BFF>
CDF978SG77

Vj 5h a5E8FB
CBC788S877

Vj 5Zd5E8F9
CBFA78S7773CBFA78S877

Vj 5h a5E8FC
CBC777X7773CBC778S777

Vj 5Zd5E8F>
CBFB78S7773CBFB78S877

Vj 5h a5E8FD
CBC787X7773CBC788S777

Vj 5dP598CD>
CBF898U877

Vj 5dP598GDF
CCA8848U777

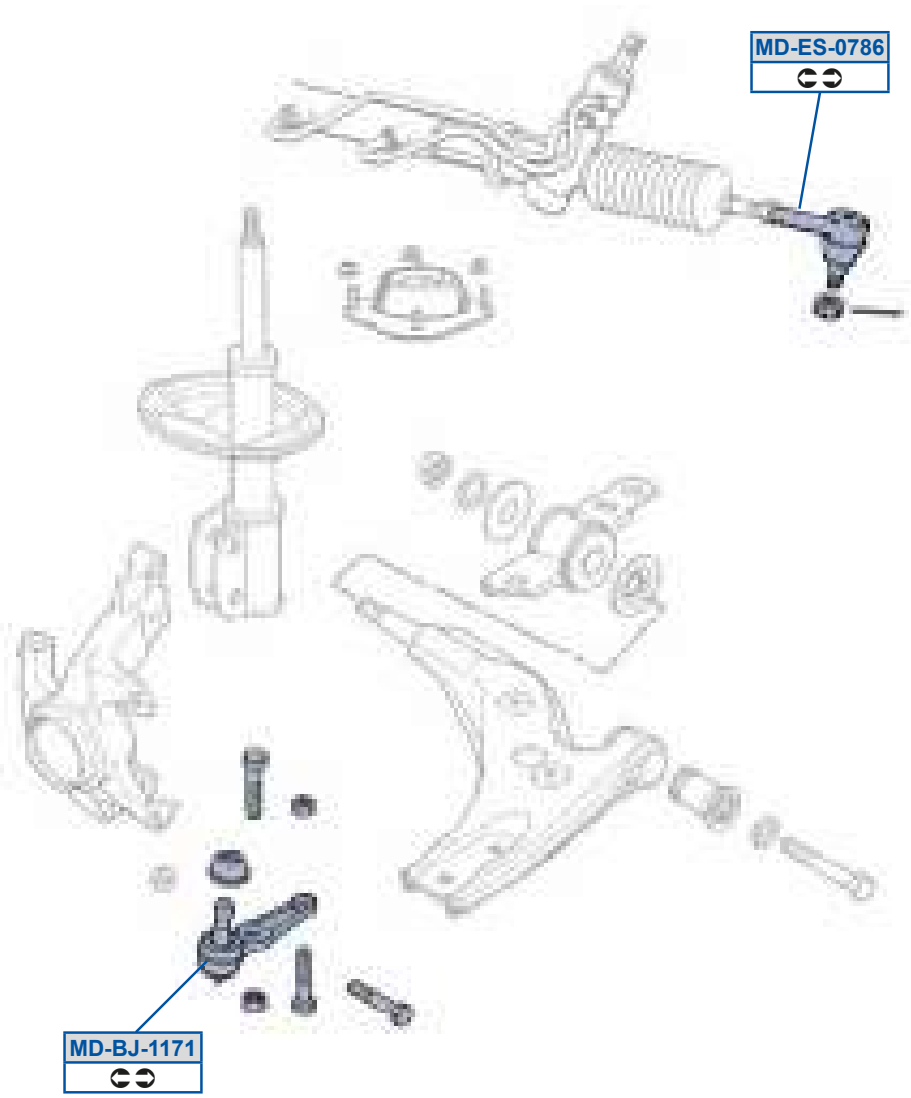
MD-ES-0786
MD-BJ-1171

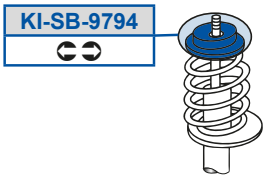
KI-SB-9794

YV5dP5GEGB

Y9789FAF70

[R5PX599E9

7Y978ABCC7Q37Y978ABCC7R

[R5Sd58EFD

7Y978A99F737Y978A99F70

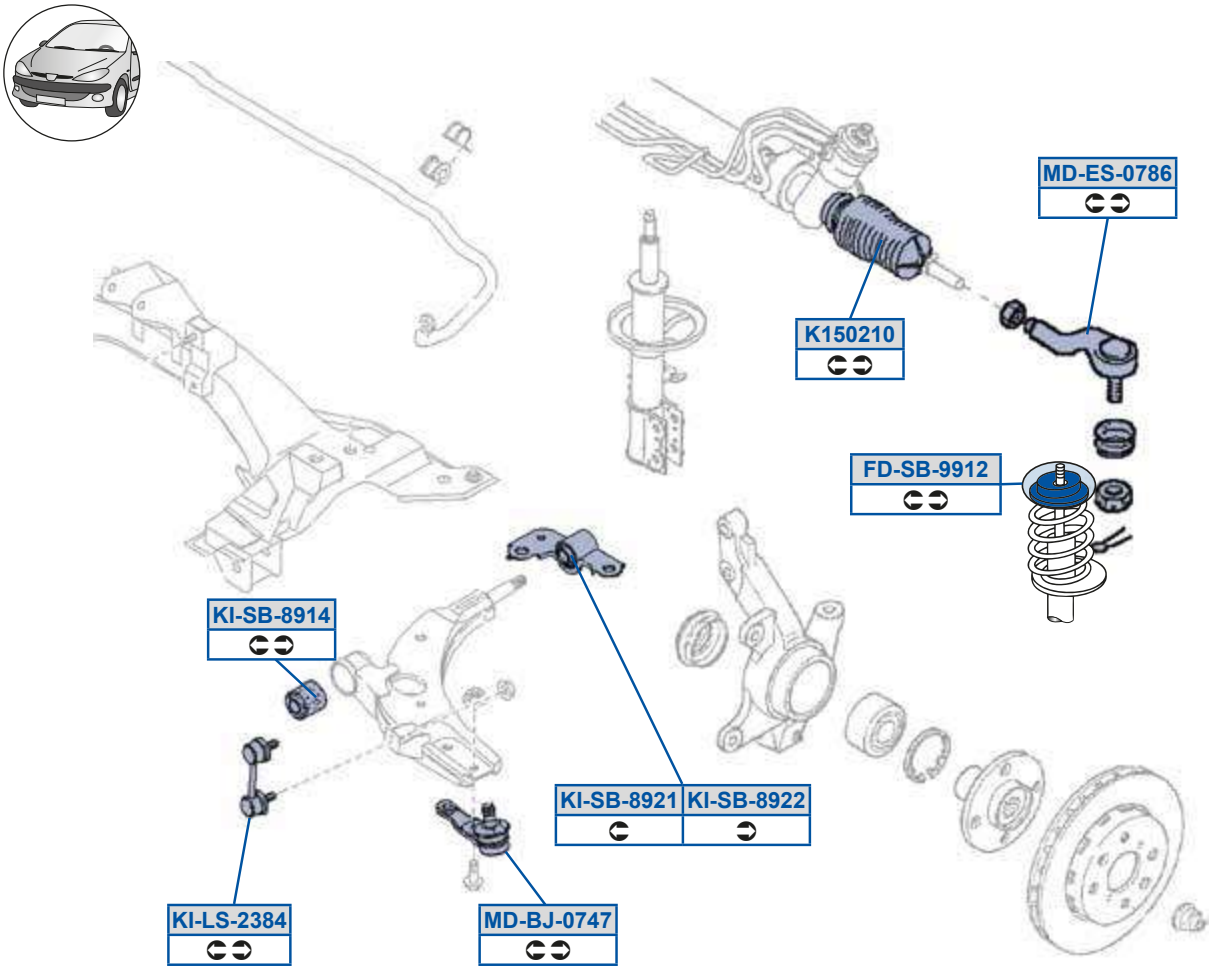

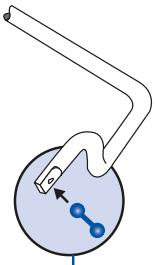

KI-LS-2670

KI-SB-10150

Bush for linkbar

KI-SB-9822 | KI-SB-9824

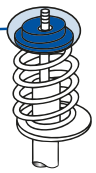

TR5dP5GC9>
TA9 8F8GFP03TA9 8F08D800

YW5dP5GF>>
7Y9d09FAG737Y9d09FAG70

Y9C8>98
7Y97AA989C3CEEEBBA787

YW5dP5GF>B
7Y9d09FAF737Y9d09FAF70

YW5Zd5>AFB
7Y90CAB8C737Y90CAB8C70

[R5PX58EBE
7Y908ABCC7037Y9T0ABCC7

YW5Zd5>DE8
7Y908AB8C7037Y908AB8C7P

[R5Sd58EFD
7Y978A99F737Y978A99F70

YW5dP5989C8
7Y908AB8C70 /40

YW5dP5FG9B
7Y9Q7ABBD7

YW5dP5FG>9
7Y908ABBD

YW5dP5FG>>
7Y908ABBD

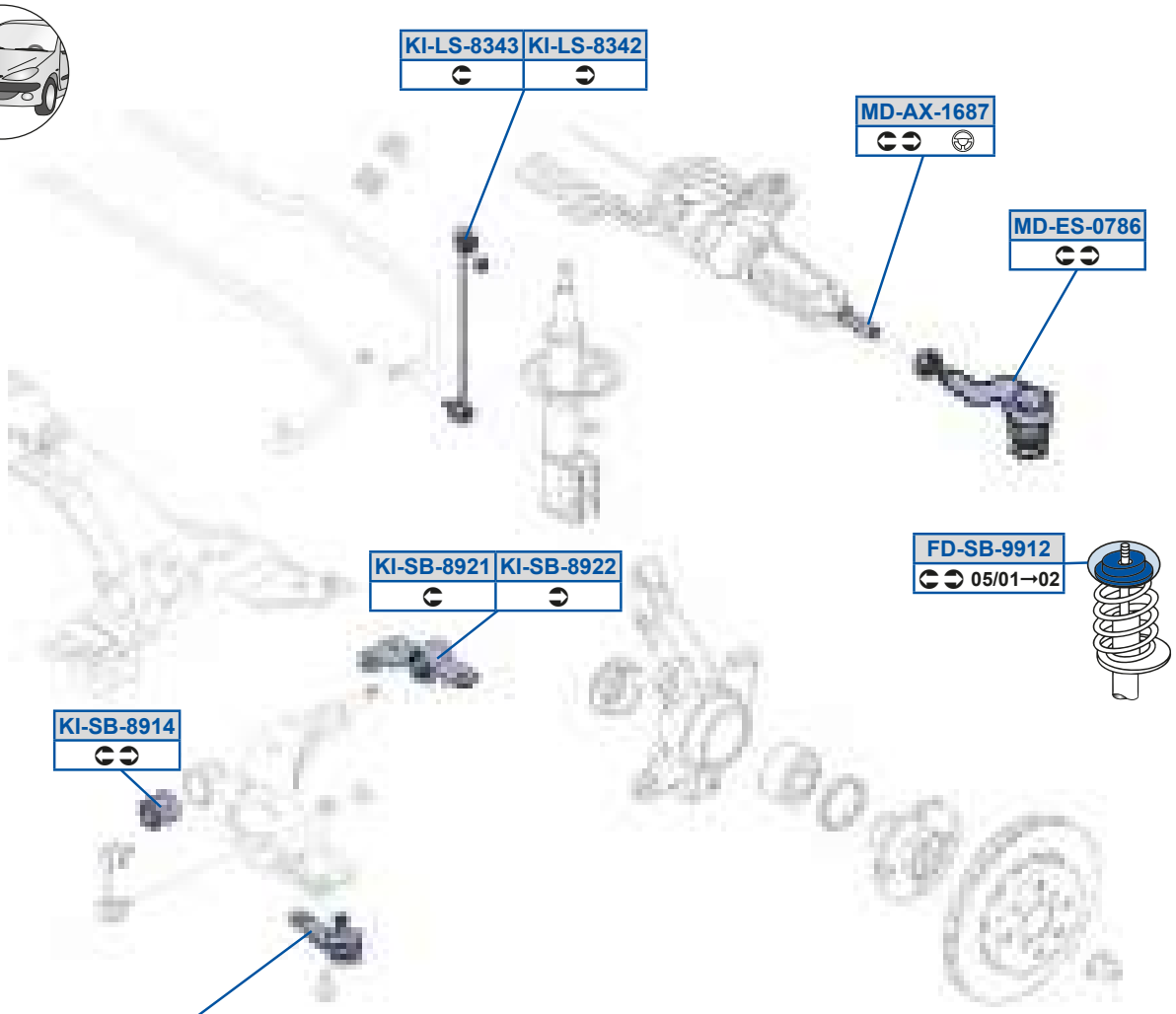

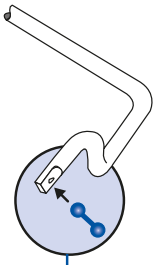

KI-LS-2670

KI-SB-10150

Bush for linkbar

KI-SB-9822 | KI-SB-9824

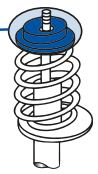

TR5dP5GG9>
TA9 8F8GFP03TA9 8F08D800

YW5dP5GF>>
7Y9d09FAG737Y9d09FAG70

YW5ZdP5>DE8
7Y908AB8C7037Y908AB8C7P

YW5dP5GF>B
7Y9d09FAF737Y9d09FAF70

YW5ZdP5FAB>
7Y9d8AB8C70

[R5Oi 59DFE
7Y978A99B737Y908A99B7

YW5ZdP5FABA
7Y9d8AB8E70

[R5PX58EBE
7Y908ABCC7037Y9T0ABCC7

YW5dP5989C8
7Y908AB8C70 /40

[R5Sd58EFD
7Y978A99F737Y978A99F70

YW5dP5FG9B
7Y9Q7ABBD7

YW5dP5FG>9
7Y908ABBD

YW5dP5FG>>
7Y908ABBD

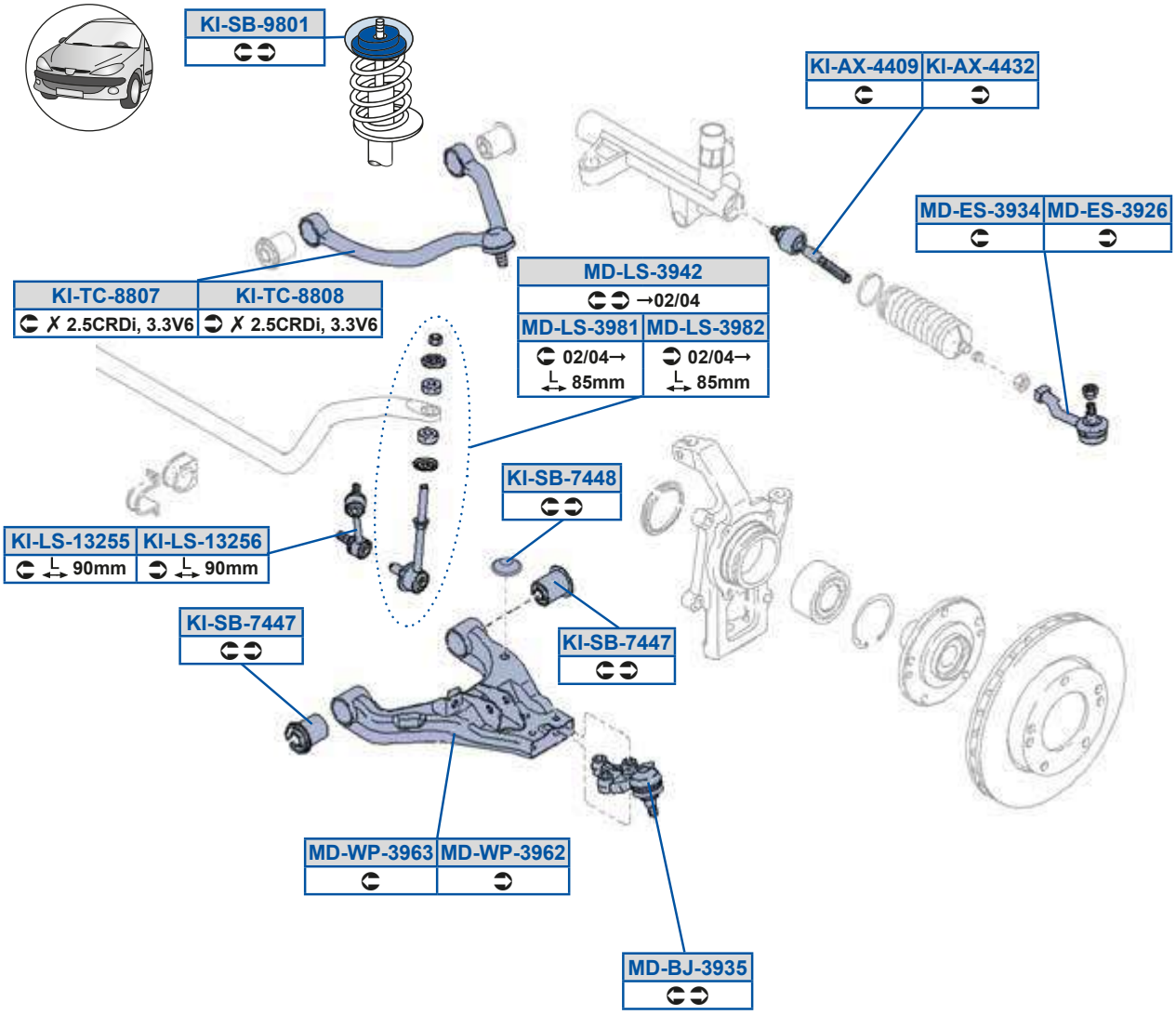
KI-SB-9801
KI-AX-4409
KI-AX-4432
MD-ES-3934
MD-ES-3926
KI-TC-8807
KI-TC-8808
✗ 2.5CRDi, 3.3V6
✗ 2.5CRDi, 3.3V6
MD-LS-3942
→02/04
MD-LS-3981
MD-LS-3982
02/04→
85mm
02/04→
85mm
KI-SB-7448
KI-LS-13255
KI-LS-13256
90mm
90mm
KI-SB-7447
KI-SB-7447
MD-WP-3963
MD-WP-3962
MD-BJ-3935

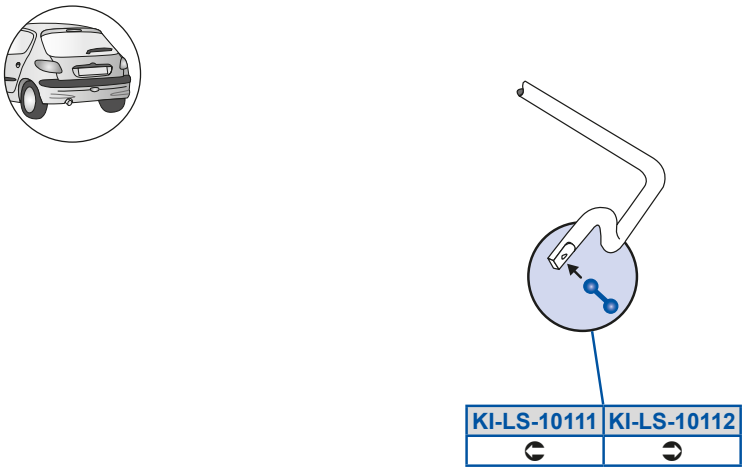
KI-LS-10111
KI-LS-10112

YW50i 5BB8G
C5EEA8AS28C3CEEA9AS787

YW5dP5GF89
CBD7AAS773CBD7BAS877

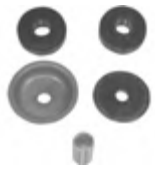

[R5Zd5AGF>
CBF88AS7D7

YW50i 5BBA>
CEEA8AS787

YW5eQ5FF8E
CBB87AS7773CBB87AS778

[R5h a5AGD>
CBC97AS7773CBC97AS778

YW5Zd598999
CCCF7AS777

YW5eQ5FF8F
CBB97AS7773CBB97AS778

[R5h a5AGDA
CBC87AS7773CBC87AS778

YW5Zd59899>
CCCF7AS7C7

[R5PX5AGAC
CBCE7AS7773CBCE7AS778

YW5Zd59A>CC
CBF88AS7873CBF88AS887

[R5Sd5AG>D
CDF97ASG77

YW5Zd59A>CD
CBF88AS7D73CBF88AS8D7

[R5Sd5AGAB
CDF97AS777

YW5dP5EBBE
CBCF7AS7773CBCF7AS778

[R5Zd5AGB>
CBF87AS777

YW5dP5EBBF
CBCG7AS777

[R5Zd5AGF9
CBF88AS787

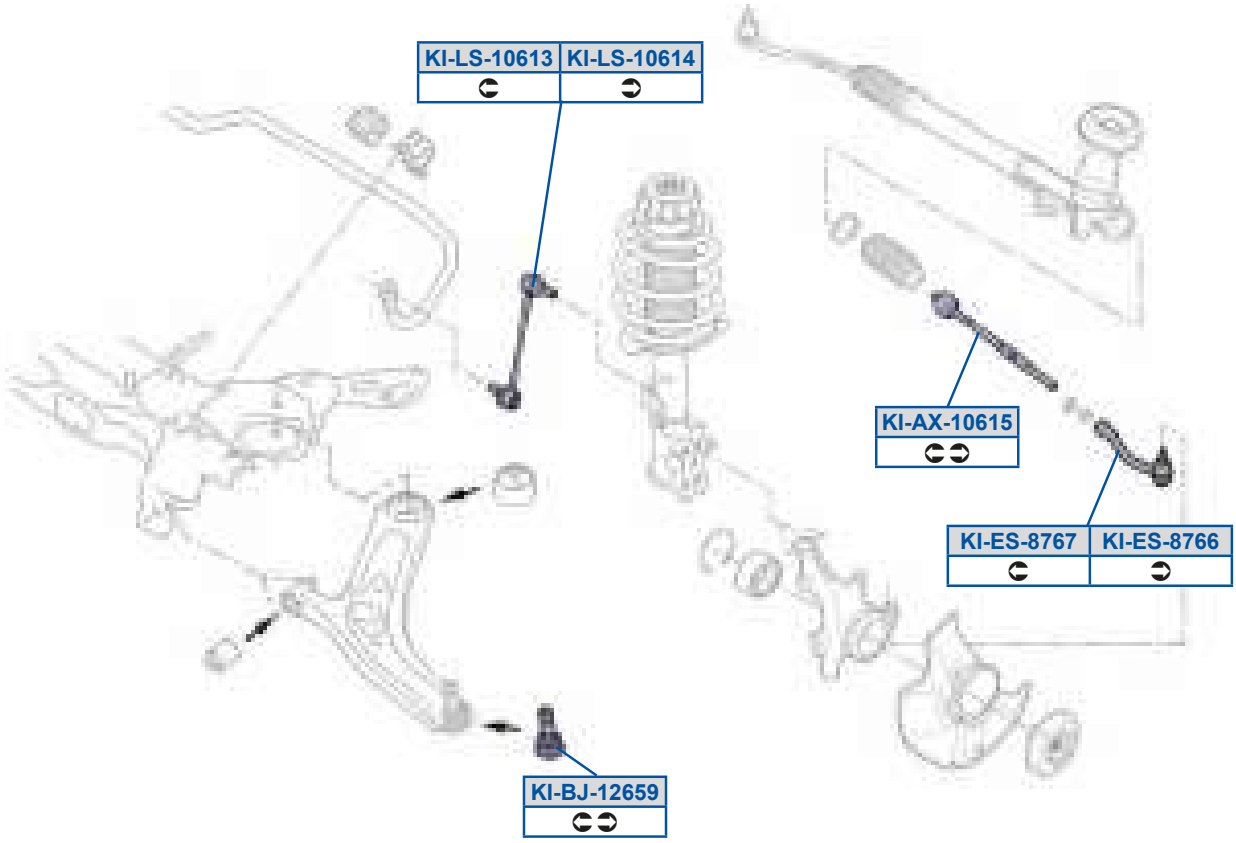
KI-LS-10613
KI-LS-10614
KI-AX-10615
KI-ES-8767
KI-ES-8766
KI-BJ-12659

MOOG

YV5Oi 598D9C
CDCB79Y777

YV5PX59>DCG
CBCA79Y777

YV5Sd5FEDD
CDF979Y7C7

YV5Sd5FEDE
CDF979Y777

YV5Zd598D9A
CBFA79Y777

YV5Zd598D9B
CBFB79Y777

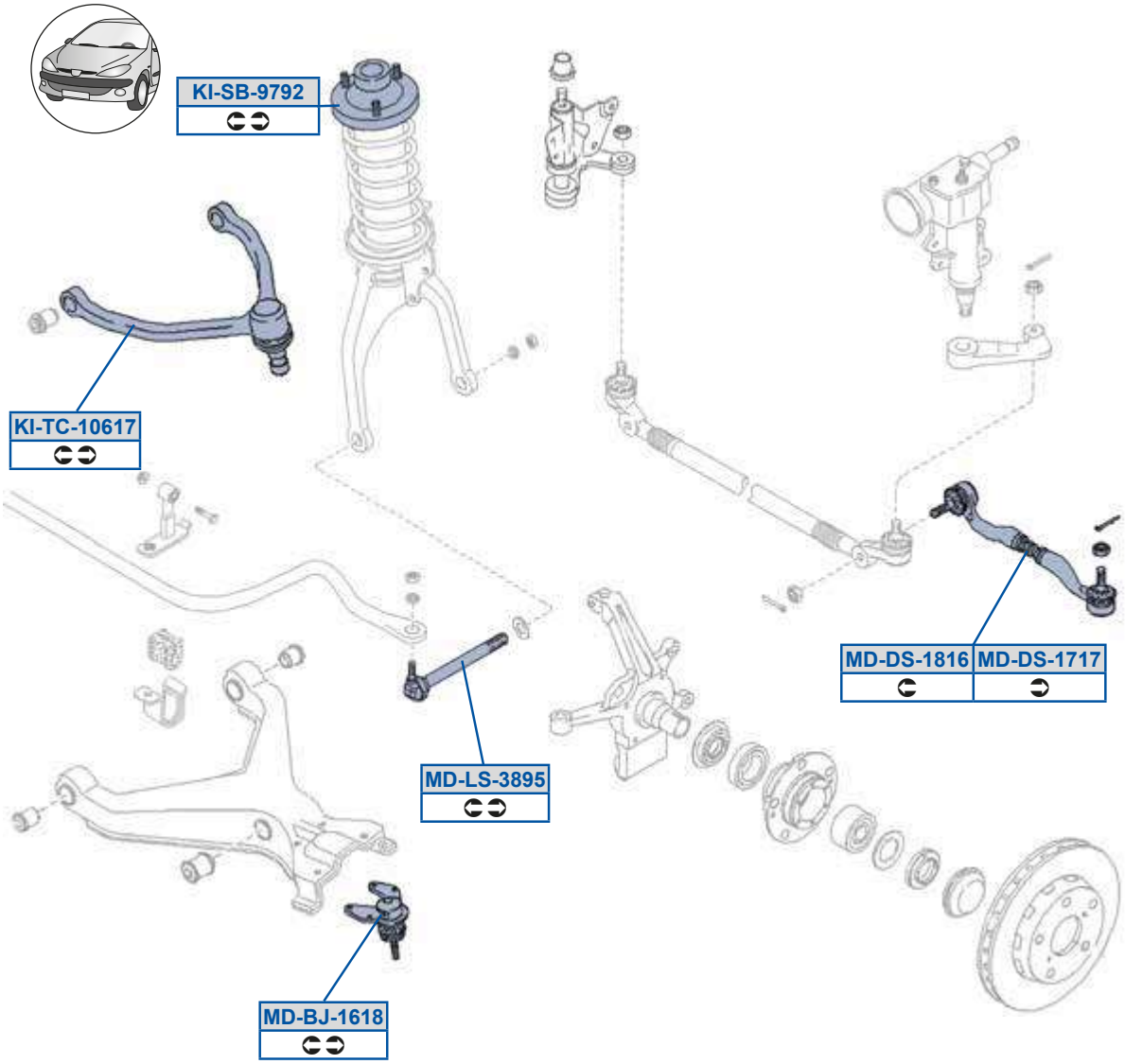
KI-SB-9792
KI-TC-10617
MD-DS-1816
MD-DS-1717
MD-LS-3895
MD-BJ-1618

YV5dP5GEG>

7Y788ABEEE0

YV5eQ598D9E

7Y788AB97737Y788AB9770

[R5PX59D9F

7Y788ABC87P

[R5Rd59E9E

7Y788A99G70

[R5Rd59F9D

7Y788A99E70

[R5Zd5AFGC

7Y788AB8D70

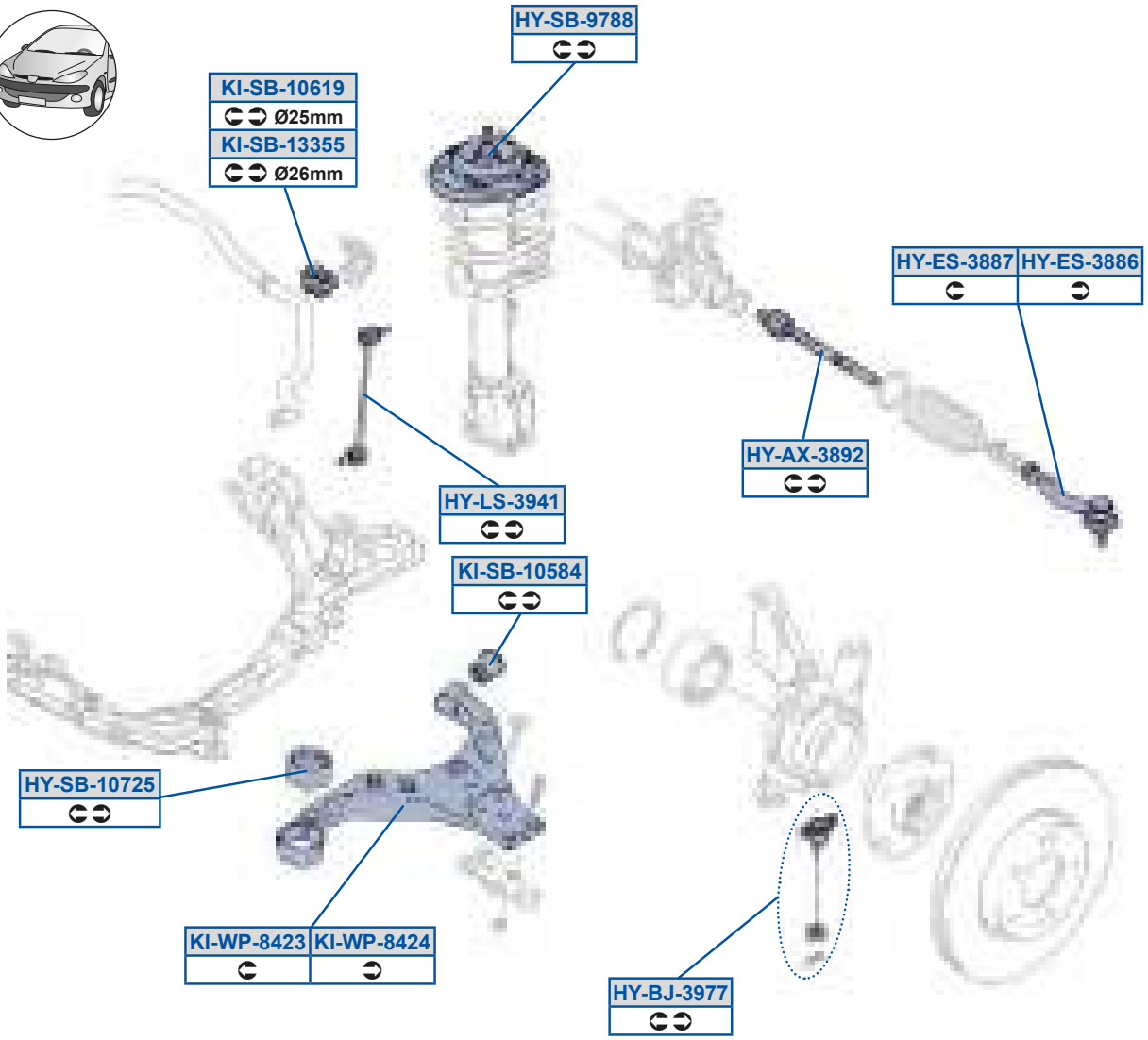
HY-SB-9788
KI-SB-10619
Ø25mm
KI-SB-13355
Ø26mm
HY-ES-3887
HY-ES-3886
HY-AX-3892
HY-LS-3941
KI-SB-10584
HY-SB-10725
KI-WP-8423
KI-WP-8424
HY-BJ-3977

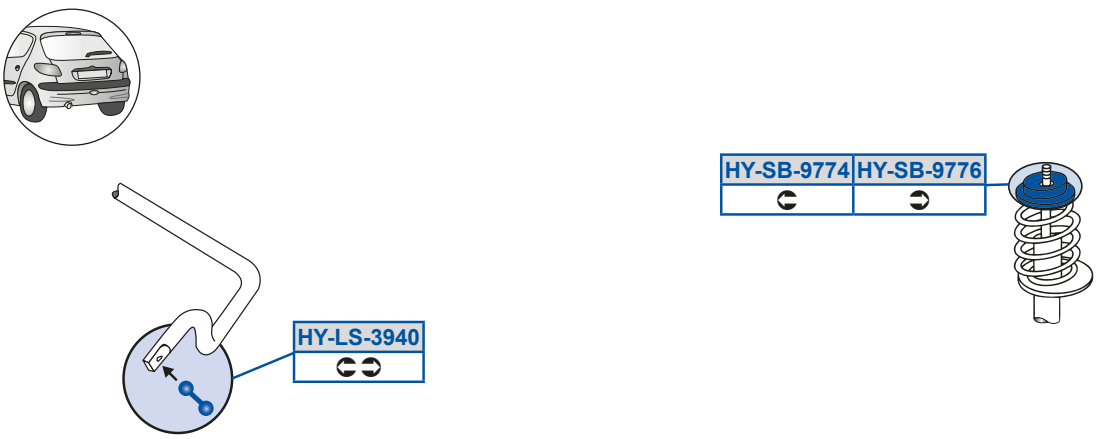
HY-SB-9774
HY-SB-9776
HY-LS-3940

Vj 5Oi 5AFG>
CEE9B9S777

Vj 5dP5GEED
CCA979G777

Vj 5PX5AGEE
C8ED79S777

Vj 5dP5GEFF
CBD87AE877

Vj 5Sd5AFFD
CDF979SG77

YV5dP598CFB
CBCC89S777

Vj 5Sd5AFFE
CDF979S777

YV5dP598D9G
CBF8A9S877

Vj 5Zd5AGB8
CCCA78T777

YV5dP59AACC
CBF8A7 7773CCC8A9S777

Vj 5Zd5AGB9
CBFA78T777

YV5h a5FB>A
CBC778T7773CBC778T877

Vj 5dP598E>C
CBCFB9S777

YV5h a5FB>B
CBC788T7773CBC788T877

Vj 5dP5GEEB
CCA879G777

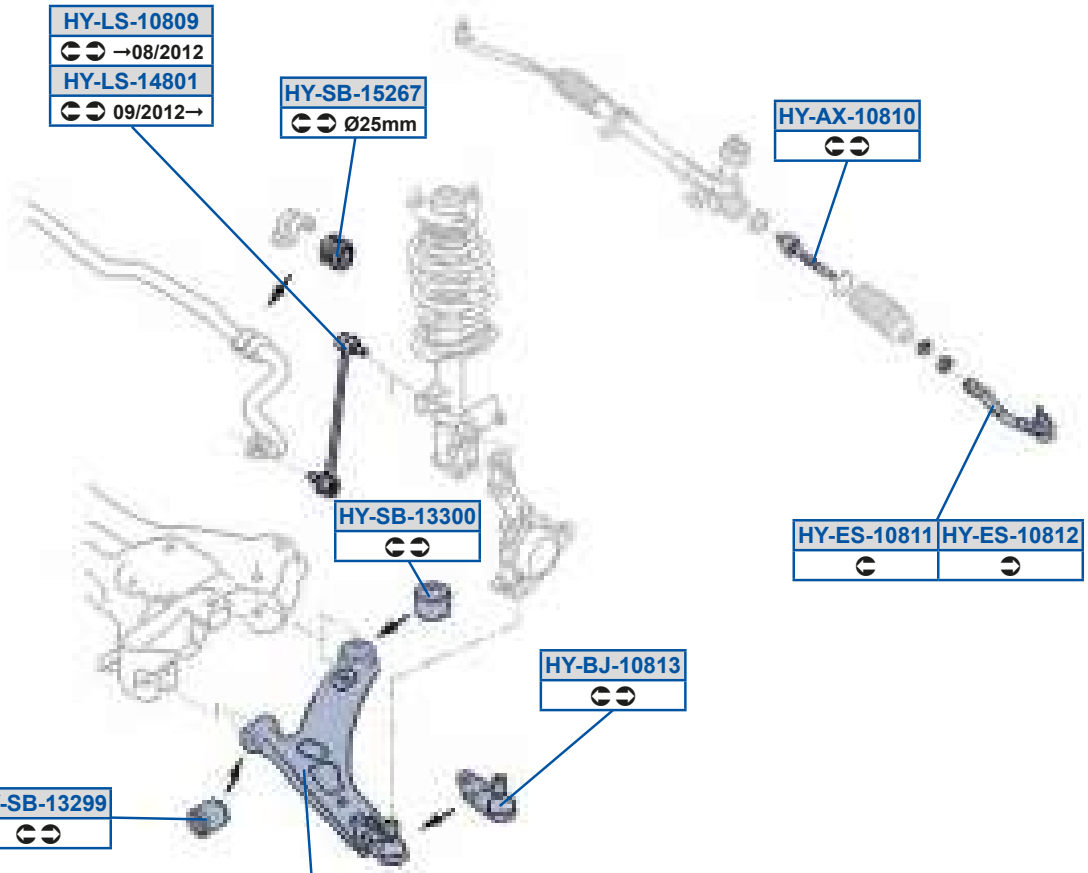

HY-SB-14721

✗ 4x4

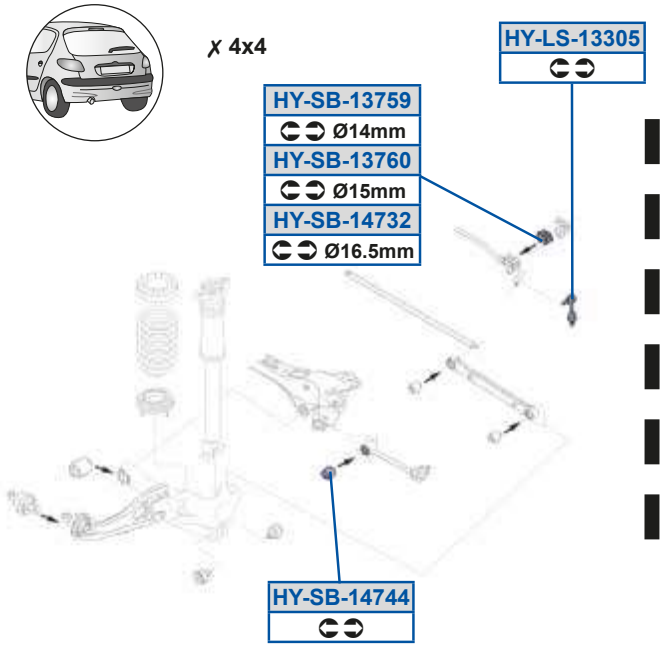

✓ 4x4

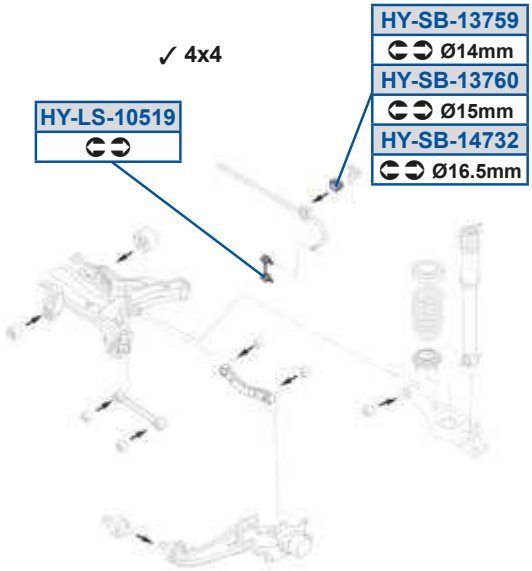

Vj 5Oi 598F98
CEE9B9o777

Vj 5dP59A>GG
CBCC89o777

Vj 5h a59AA89
CBC779 777

Vj 5PX598F9A
CBCA7Ao777

Vj 5dP59AA88
CBCFB9o7773CBCFBAo777

Vj 5h a59AA8>
CBC789 777

Vj 5Sd598F99
CDF979o7773CDF979t 8G7

Vj 5dP59AECG
CCC8AAd977

Vj 5Sd598F9>
CDF979o7C73CDF979t 877

Vj 5dP59AED8
CCC8AAd877

Vj 5Zd598C9G
CCCA79o8773CCCA79o977

Vj 5dP59BE>9
CBCFB9t 777

Vj 5Zd598F8G
CBFA79o7773CBFA79o977

Vj 5dP59BEA>
CCC8A9o877

Vj 5Zd59AA8C
CCCA7An7773CCCB7An777

Vj 5dP59BEBB
CC9CA9o777

Vj 5Zd59BF89
CBAF7Au7773CBFA7Au777

Vj 5dP59C>DE
CBF8A9o777

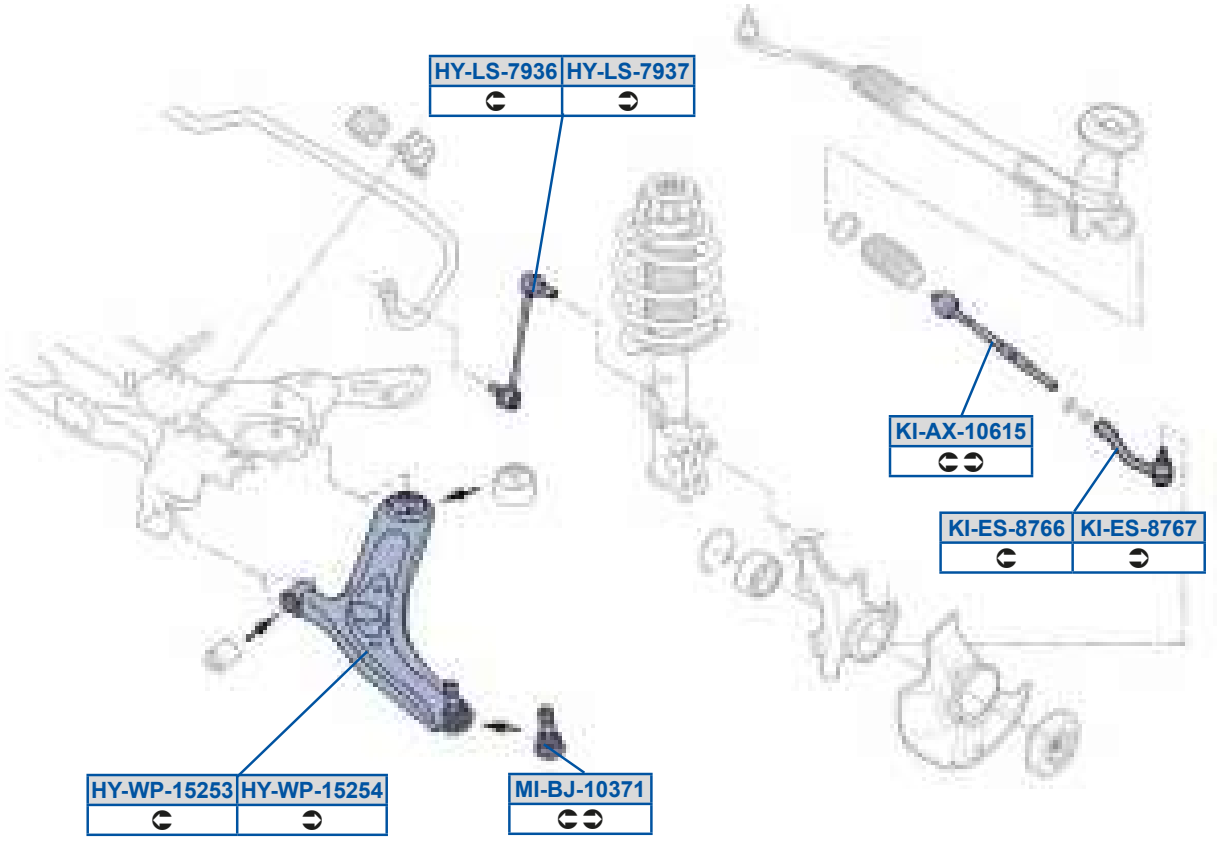
HY-LS-7936
HY-LS-7937
KI-AX-10615
KI-ES-8766
KI-ES-8767
HY-WP-15253
HY-WP-15254
MI-BJ-10371

Vj 5Zd5EGAD
CBFB78X777

Vj 5Zd5EGAE
CBFA78X777

YW5Oi 598D9C
CDCB79Y777

YW5Sd5FEDD
CDF979Y7C7

YW5Sd5FEDE
CDF979Y777

[W5PX598AE9
CBC7A99O773CBC7A9CO77

ZORO

998	897GC 9; 79;	999	897GC
99;	897GC 9; 799		

998 5999 599>

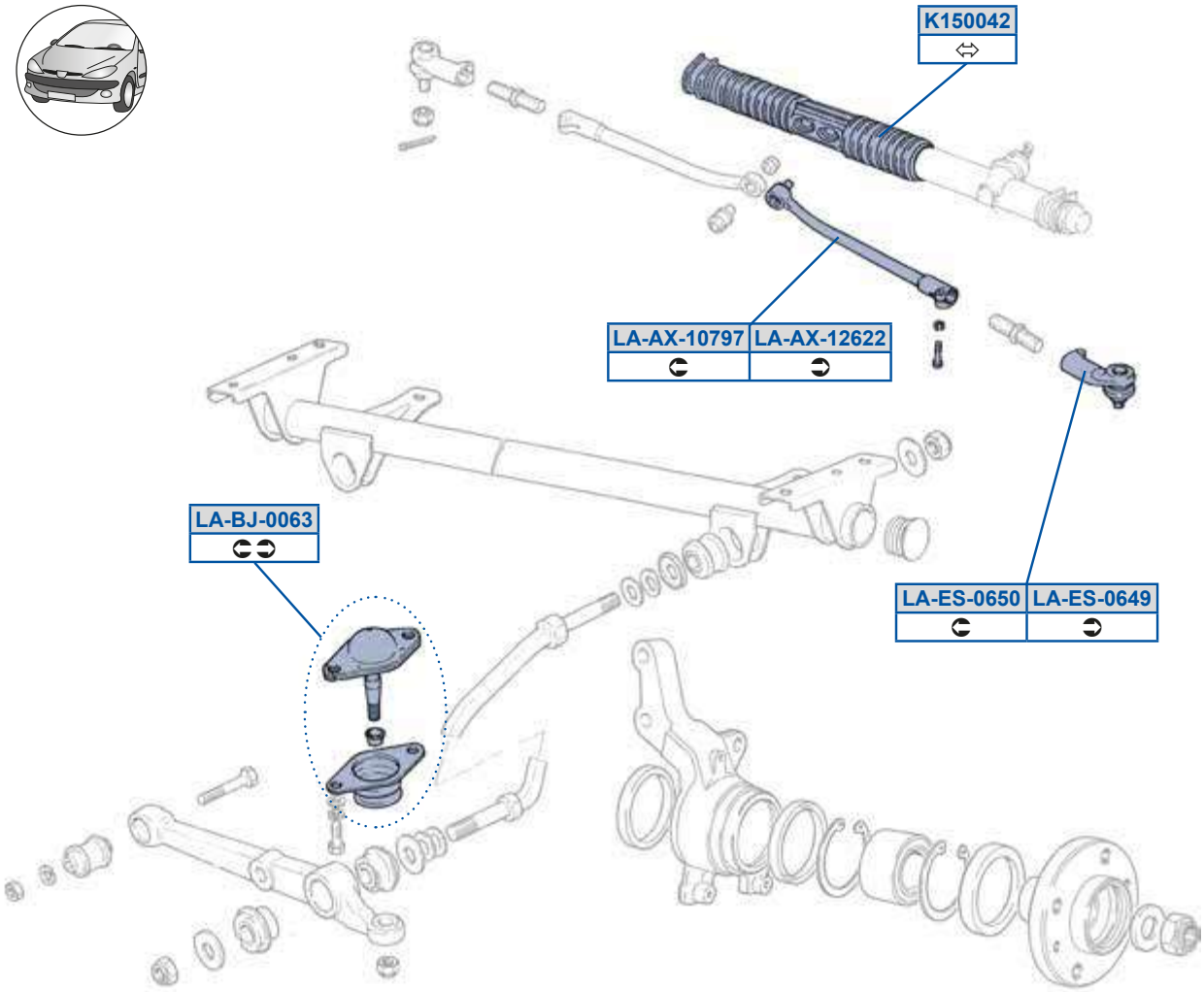

ZORO

MOOG

Y9C88B>

987FAB7899B39887AB7899B

ZO5Oi 598EGE

9887AB8B7CG

ZO5Oi 59>D>>

9887AB8B7CF

ZO5PX588DA

987F9G7B8FC3987F9G7B8FC78

ZO5Sd58DBG

9887AB8B7CD

ZO5Sd58DC8

9887AB8B7CE

998 5999 599>

ZORO

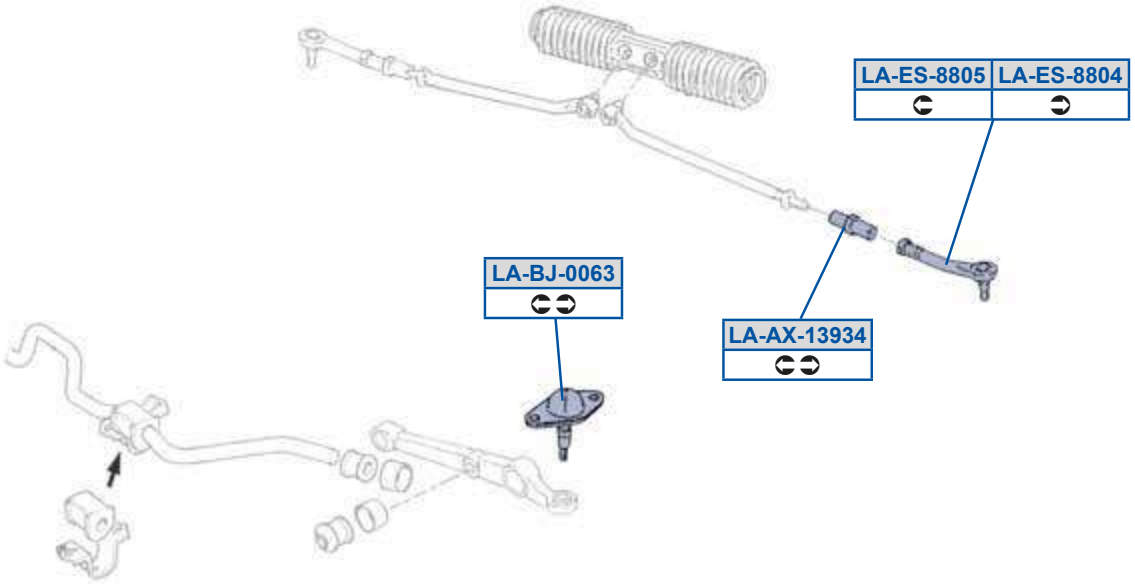
LA-ES-8805
LA-ES-8804
LA-BJ-0063
LA-AX-13934

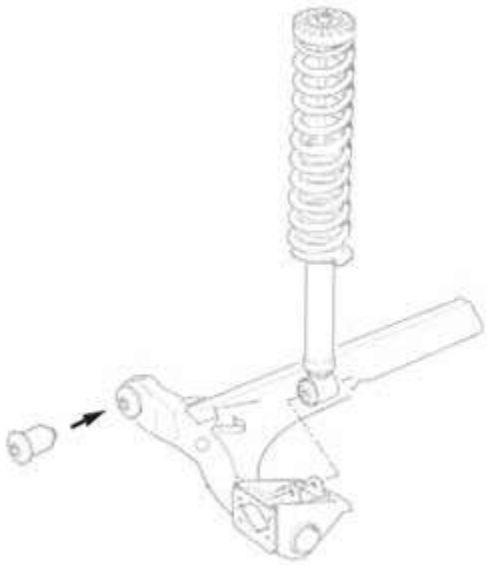

ZO5Oi 59AGAB
888F7AB8B7CF /40

ZO5PX588DA
987F9G7B8FC3987F9G7B8FC78

ZO5Sd5FF8B
888FAB8B7CD

ZO5Sd5FF8C
888FAB8B7CE

ZORO

YOZWO S t x 0999E1	9878B	YOZWO Vt vÉut v 0999G1	9878B 9; 79A
YOZWO dt 0999F1	9878B		

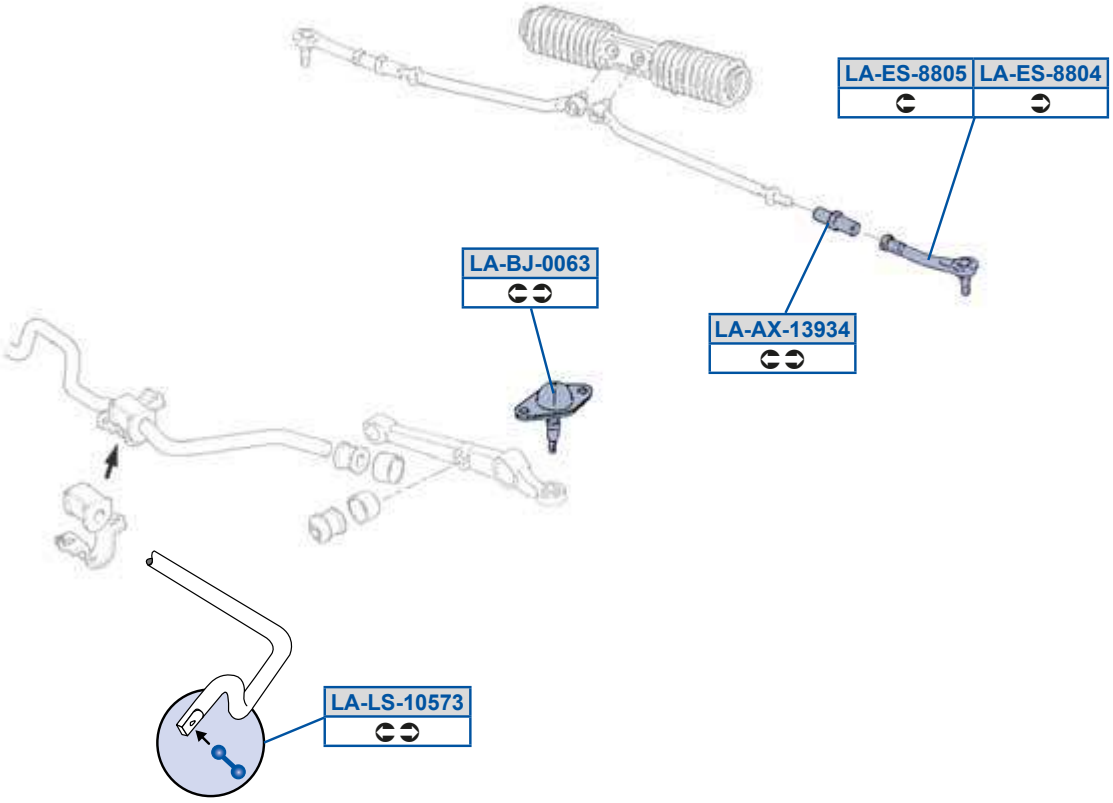

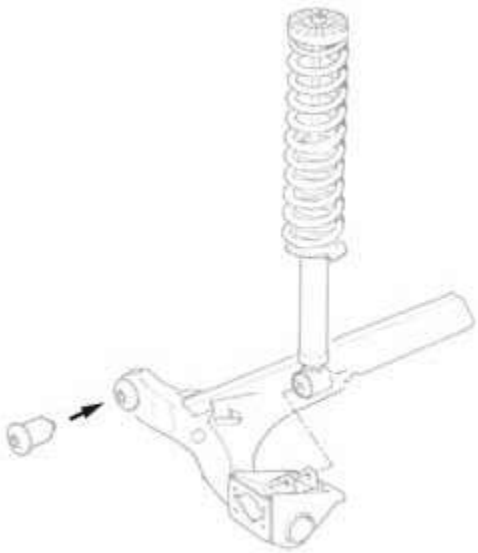

MOOG

ZO5Oi 59AGAB
888F7AB8B7CF /40

ZO5PX588DA
987F9G7B8FC3987F9G7B8FC78

ZO5Sd5FF8B
888FAB8B7CD

ZO5Sd5FF8C
888FAB8B7CE

ZO5Zd598CEA
888F9G7D7C7

ZORO

] WgO Q xw_yy5c t wgxÉév x 0, 9; 94; 9A91	9; 7ED	] WgO WW0, 9; A1	8G78;

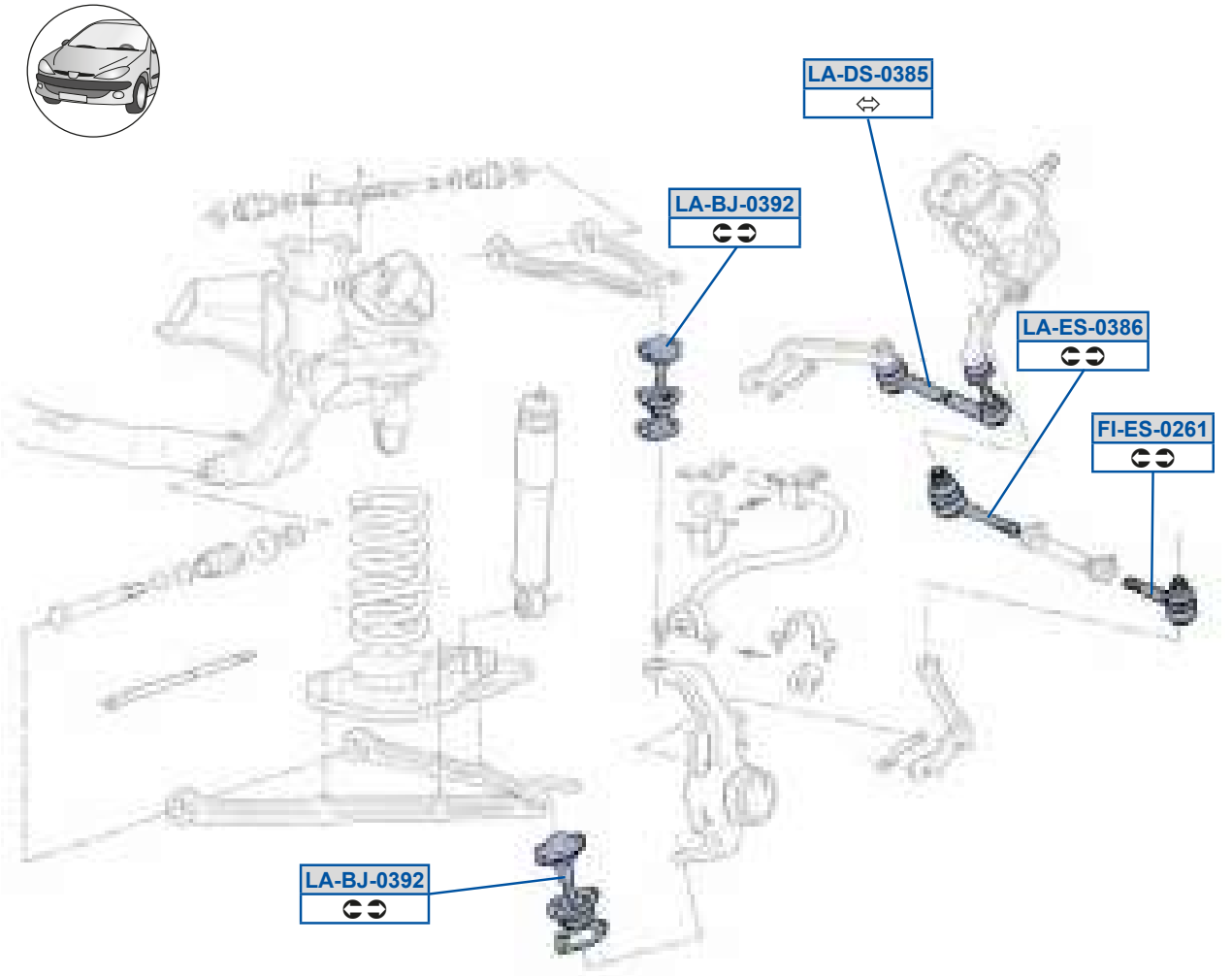

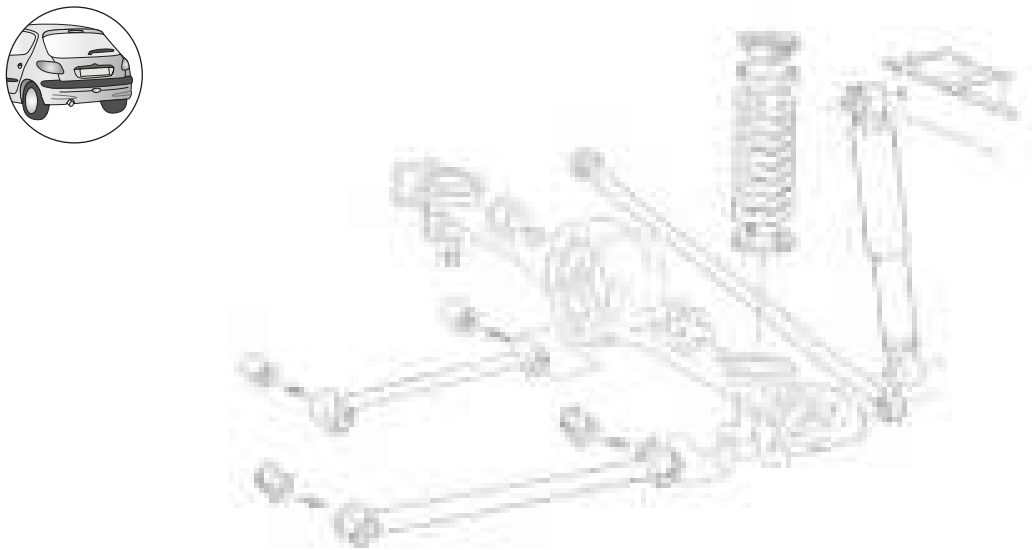

TV6Sd58>D9
9878A77A7CE

ZO5PX58AG>
98789G7B8FC398789G7B8G9

ZO5Rd58AFC
9898AB8B788

ZO5Sd58AFD
9878AB8B88D39898AB8B88D

ZORO

acWcO S t x Q 9E91	9878G	acWcO Vt vÉut v Q 9E; 1	9; 78F
acWcO dt Q 9E81	9; 78F		

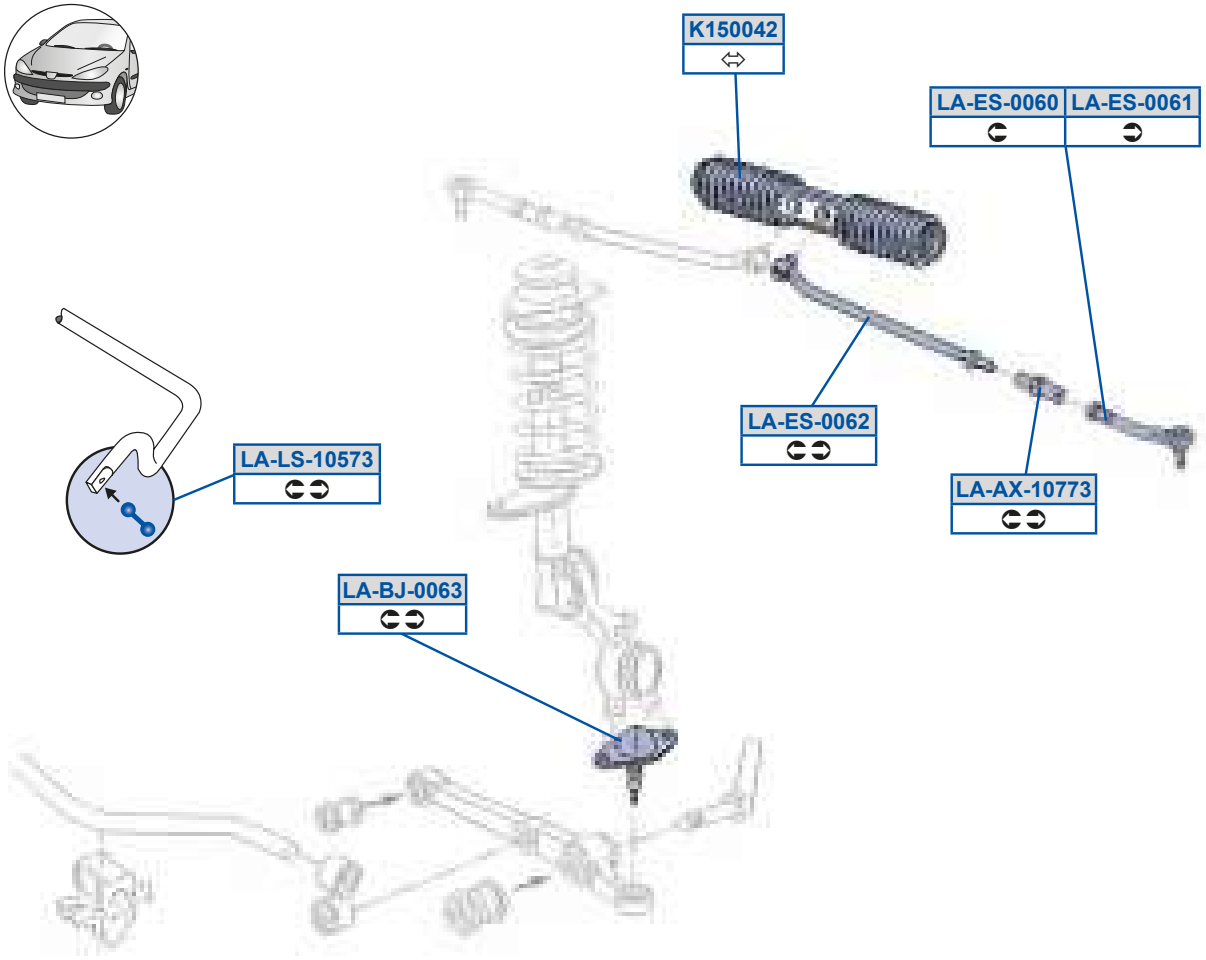

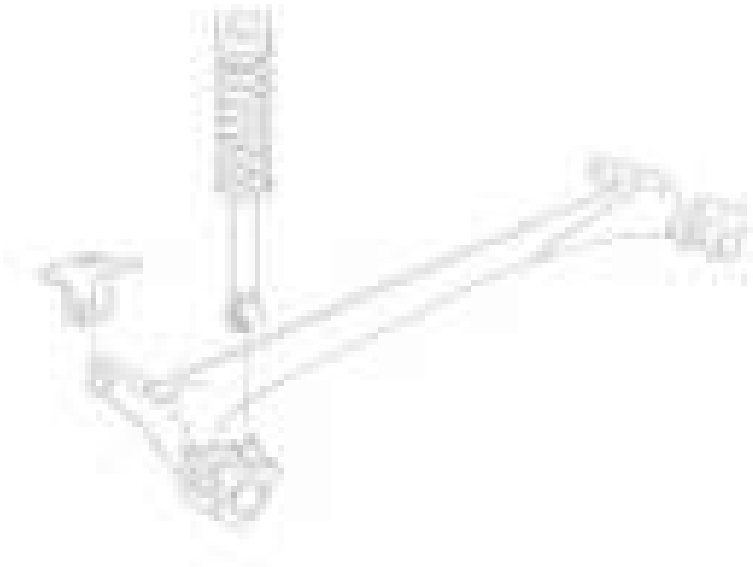

MOOG

Y9C88B>
987FAB7899B39887AB7899B

ZO5Oi 598EEA
9887AB8B7CB

ZO5PX588DA
987F9G7B8FC3987F9G7B8FC78

ZO5Sd588D8
987FAB8B7CD

ZO5Sd588D9
987FAB8B7CE

ZO5Sd588D>
987FAB8B7D7

ZO5Zd598CEA
888F9G7D7C7

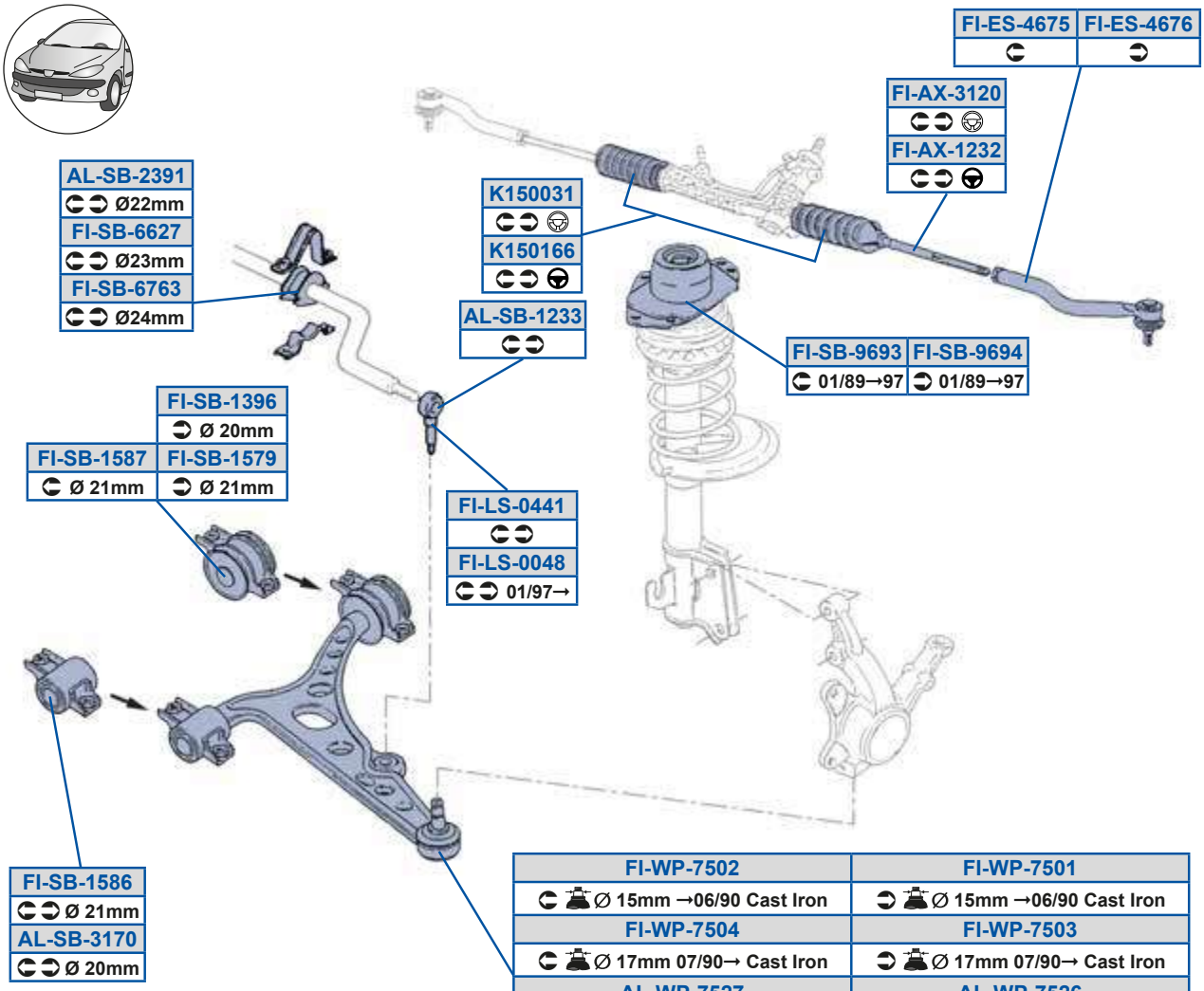

FI-WP-7502	FI-WP-7501
Ø 15mm →06/90 Cast Iron	Ø 15mm →06/90 Cast Iron
FI-WP-7504	FI-WP-7503
Ø 17mm 07/90→ Cast Iron	Ø 17mm 07/90→ Cast Iron
AL-WP-7527	AL-WP-7526
Ø 17mm 01/97→ Cast Iron	Ø 17mm 01/97→ Cast Iron
AL-TC-8867	AL-TC-8868
Ø 17mm 01/97→ Forged Steel	Ø 17mm 01/97→ Forged Steel

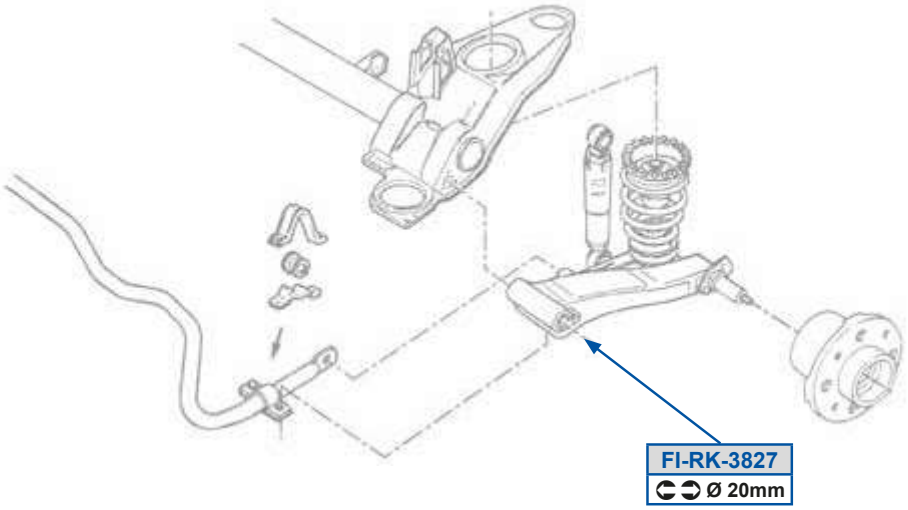

OZ5dP59>AA
D7F7DB7F3ED78DB9

TW5Oi 5A9>8
CGCF9BB3EDAAE98

TW5dP59CFD
ED787DB

Y9C88A9
ECBCCEG

OZ5dP5>AG9
CFG98GD3ED9CE8B

TW5Sd5BDEC
D7CDCE7D3ECG898D

TW5dP59CFE
ED787DC

Y9C89DD
GGBDF8D3GGBEADG

OZ5dP5A9E8
GAC788F7 /4OBGAC888F8 /4O

TW5Sd5BDED
D7CDCE7C3D7F7GBGB

TW5dP5DD>E
D7F7FCCE3ED78DBD

OZ5eQ5FFDE
BDBEBCCD3EEF7BBA

TW5Zd588BF
BDB8A8993BDCBCEBA

TW5dP5DEDA
EED7B9D

OZ5eQ5FFDF
BDBEBCCE3EEF7BBB

TW5Zd58BB9
D7CE7D9E3D7F7G9B9

TW5dP5GDGA
BDB8B8FA3D7F7DAGF

OZ5ha5EC>D
BDBEBCCE3EEF7BBB

TW5cY5AF>E
BDBCGE9A

TW5dP5GDGB
BDB8B8FB3D7F7GECA

OZ5ha5EC>E
BDBEBCCD3EEF7BBA

TW5dP59AGD
ED787DF3GAC788F7 /4O

TW5ha5EC8A
BDB9AF9A3E8EBEG8D

TW5Oi 59>A>
7GGB8D9C3GGB8D9C

TW5dP59CEG
ED787DF

TW5ha5EC8B
BDB9AF993E8EBEG8C

Rvér WØ9GGA 5L1

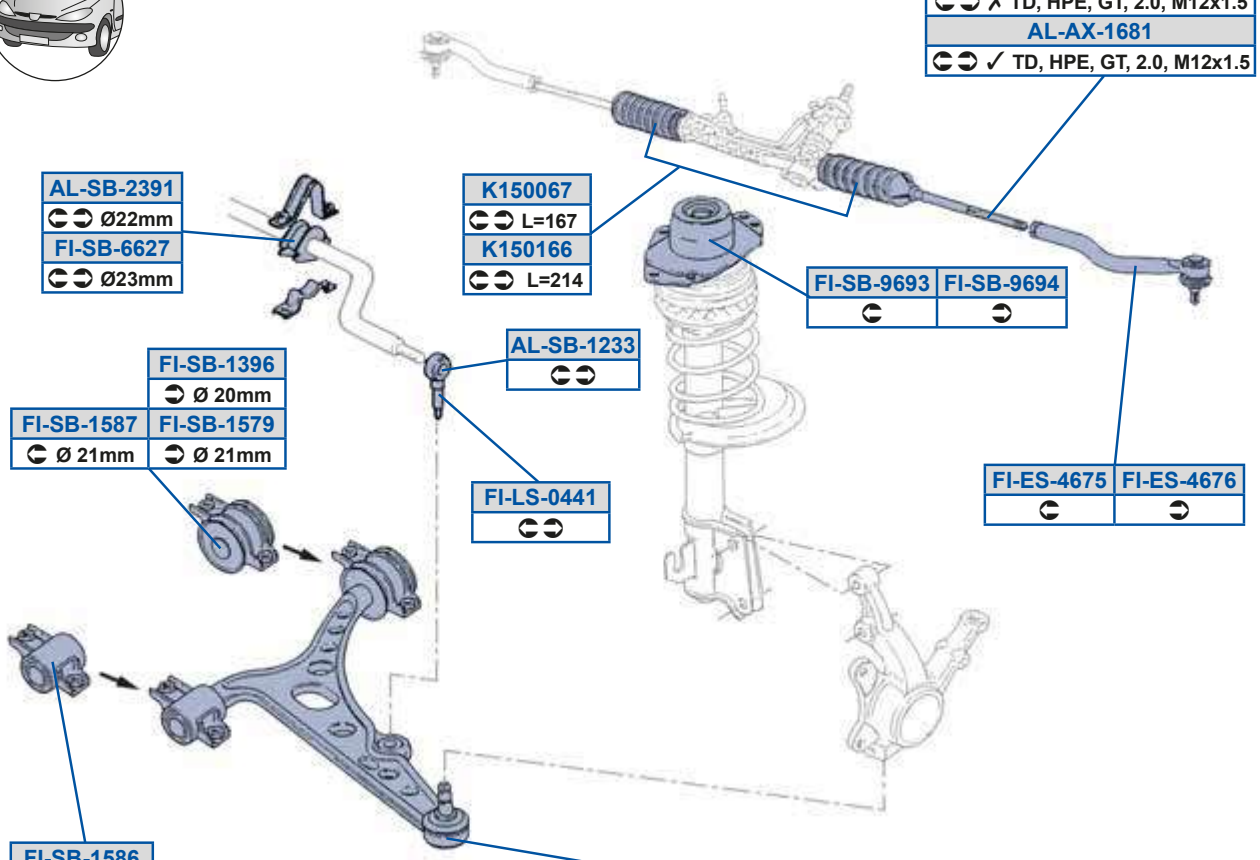

FI-WP-7504	FI-WP-7503
Ø 17mm ✗ TD, HPE, 2.0GT Cast Iron	Ø 17mm ✗ TD, HPE, 2.0GT Cast Iron
AL-WP-7527	**AL-WP-7526**
Ø 17mm ✓ TD, HPE, 2.0GT Cast Iron	Ø 17mm ✓ TD, HPE, 2.0GT Cast Iron
AL-TC-8867	**AL-TC-8868**
Ø 17mm ✓ TD, HPE, 2.0GT Forged Steel	Ø 17mm ✓ TD, HPE, 2.0GT Forged Steel

ZO] QWØ

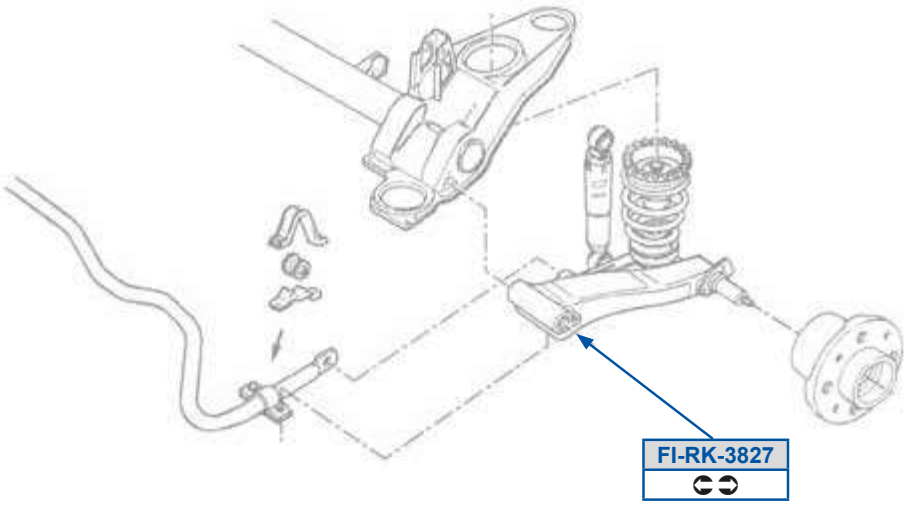

MOOG

OZ5Oi 59DF9
G7C7BC93GGBBBC9

TV5Oi 59>A>
7GGB8D9C3GGB8D9C

TV5dP59CFE
ED787DC

OZ5dP59>AA
D7F7DB7F3ED78DB9

TV5Sd5BDEC
D7CDCE7D3ECG898D

TV5dP5DD>E
D7F7FCCE3ED78DBD

OZ5dP5>AG9
CFG98GD3ED9CE8B

TV5Sd5BDED
D7CDCE7C3D7F7GBGB

TV5dP5GDGA
BDB8B8FA3D7F7DAGF

OZ5dP5A9E8
GAC788F7 /40 3GAC888F8 /40

TV5Zd58BB9
D7CE7D9E3D7F7G9B9

TV5dP5GDGB
BDB8B8FB3D7F7GECA

OZ5eQ5FFDE
BDBEBCCD3EEF7BBA

TV5cY5AF>E
BDBCGE9A

TV5ha5EC8A
BDB9AF9A3E8EBEG8D

OZ5eQ5FFDF
BDBEBCCE3EEF7BBB

TV5dP59AGD
ED787DF3GAC788F7 /40

TV5ha5EC8B
BDB9AF993E8EBEG8C

OZ5ha5EC>D
BDBEBCCE3EEF7BBB

TV5dP59CEG
ED787DF

Y9C88DE
AD79787F3E7EGAB7

OZ5ha5EC>E
BDBEBCCD3EEF7BBA

TV5dP59CFD
ED787DB

Y9C89DD
GGBDF8D3GGBEADG

RSZeO WWOFBB1	8G78F 8F79B		

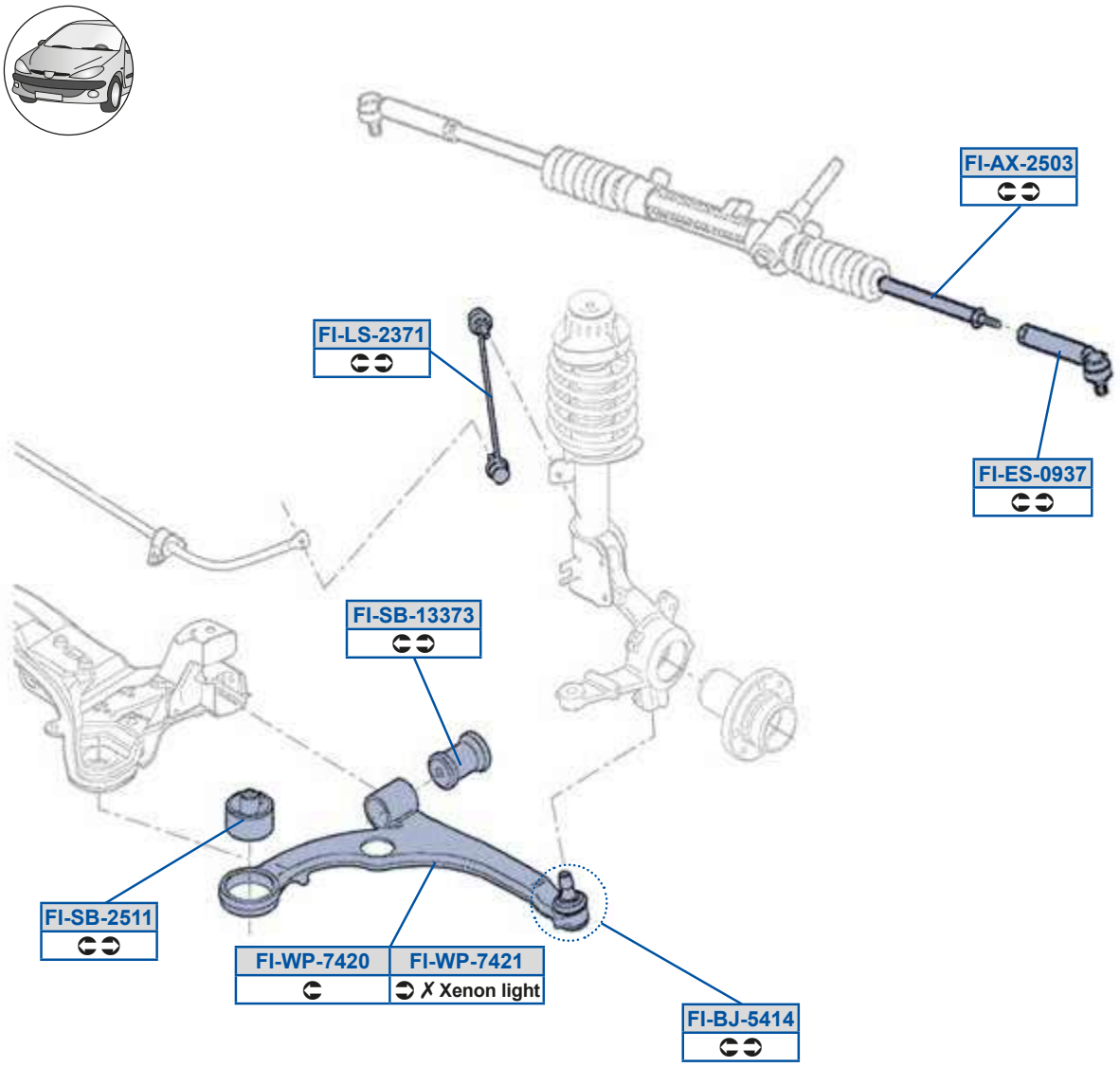

FI-SB-8781

TV5Oi 5>C8A
GGBG98E

TV5PX5CB9B
C7E7CBDB /40 8C7E7CBDDC /40

TV5Sd58GAE
GGBG98F

TV5Zd5>AE9
C7E77BDB3C7E77GB8

TV5dP59AAEA
C7E7C7FA /40 8C7E7C7FB /40

TV5dP5>C99
C7E77EEF

TV5dP5FEF9
C8FB7D77

TV5h a5EB>8
C7E7CBDB3C8F9EEAD

TV5h a5EB>9
C7E7CBDC3C8F9EEAE

ZO] QWØ

YOaaO CFAFO1	8F7GB 98789	YOaaO Q x CFAF1	8E7GD 8A789
YOaaO dh CFAFP1	8E7GD 98789		

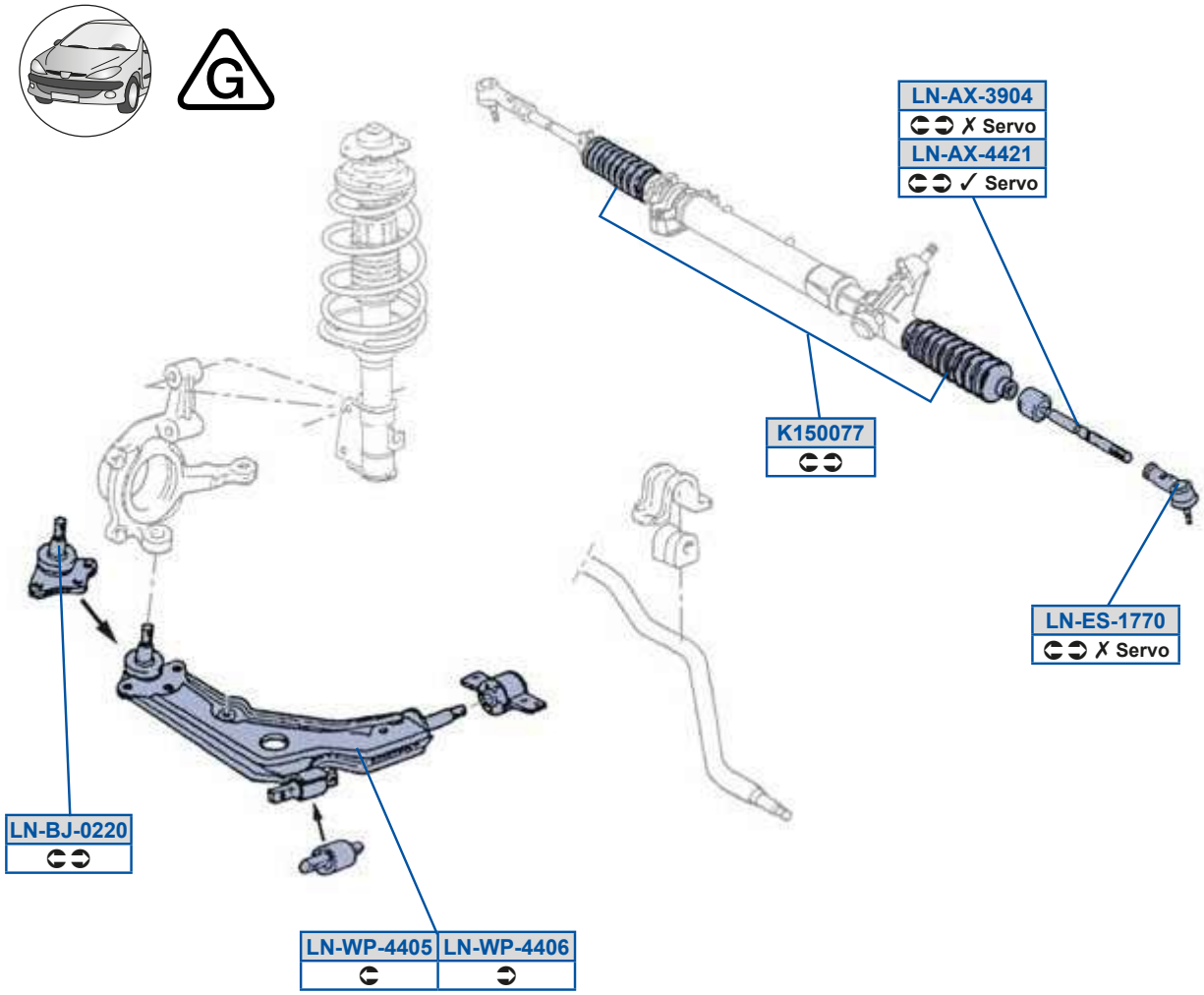

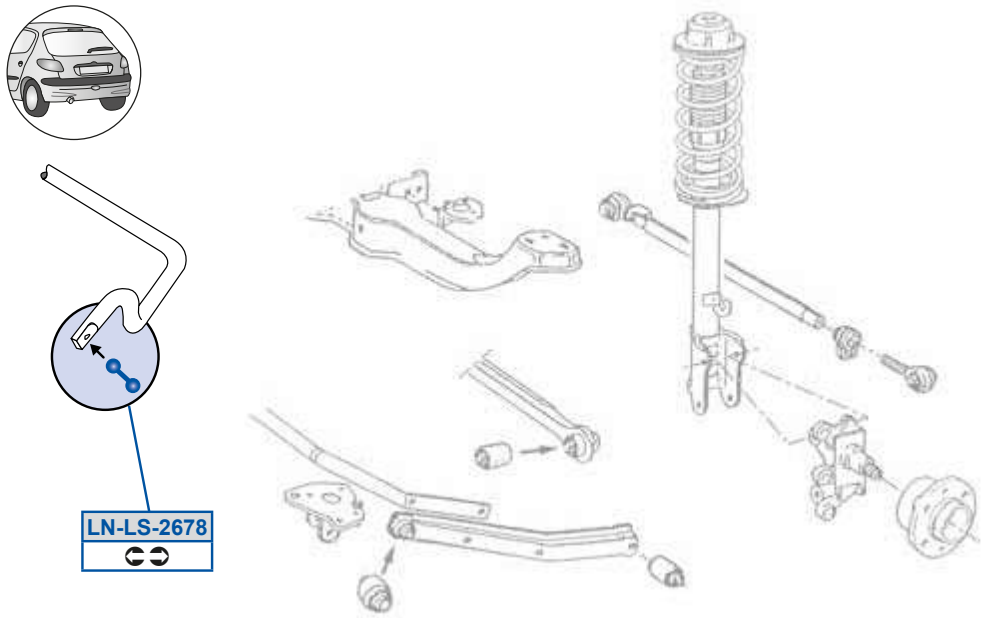

MOOG

Y9C88EE
GGB89GA

Z] 5Oi 5AG8B
GGBDF8C

Z] 5Oi 5BB>9

Z] 5PX58>>8
F9BF77GG

Z] 5Sd59EE8
GGBDF8E

Z] 5Zd5>DEF
BDBD97BG

Z] 5h a5BB8C
BDB79FED3BDB8BEAB

Z] 5h a5BB8D
BDB79FEE3BDB8BEAC

ZkPcO 0FAGOi 1	8E7GG 9878C	ZkPcO dh 0FAGPi 1	8E7GG 9878C

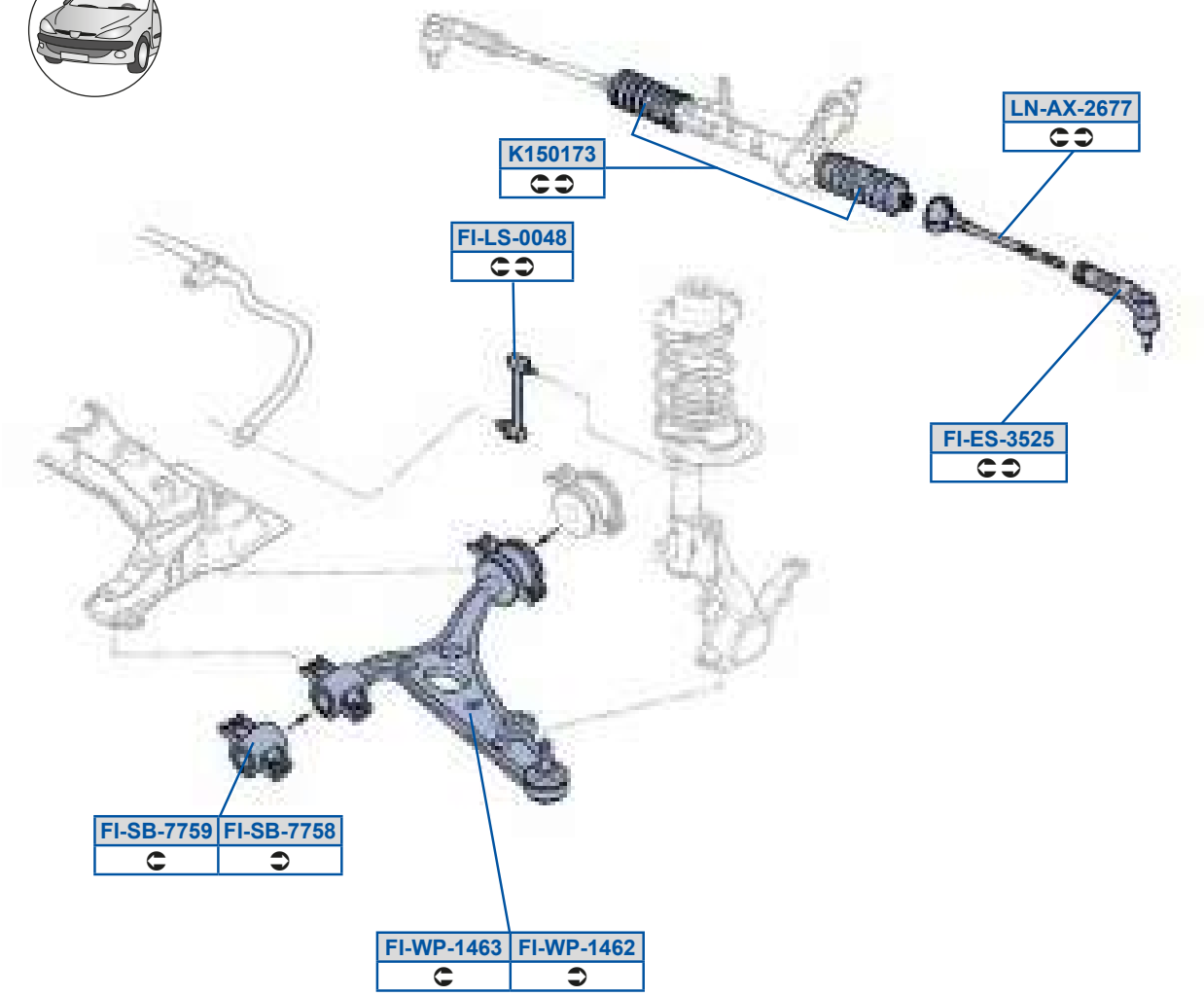

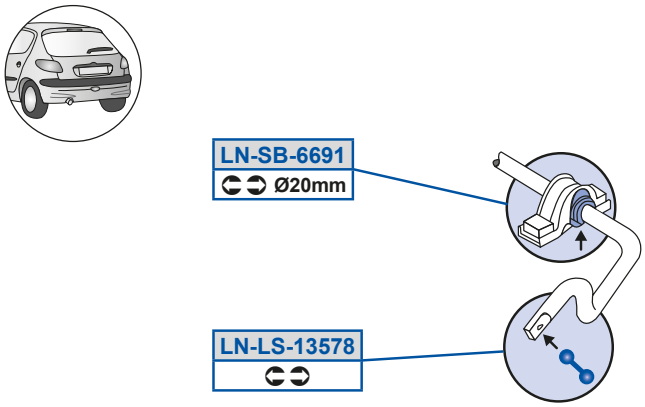

TV6Sd5AC>C
GGBEG9D

TV6Zd588BF
BDB8A8993BDCBCEBA

TV6dP5EEOF
BDEDBEBD/403BDEDBEBE/40

TV6dP5EEOG
BDEDBEBD/403BDEDBEBE/40

TV6h a59BD>
BDC998B93BDEDBEBE

TV6h a59BDA
BDC9CB7E3BDEDBEBD

Y9C89EA
BCCAC7C7873EF977B7DAF

Z]5Oi5>DEE
GGBF9GD

Z]5ZdA59ACEF
BDCBCEBG3C7E78F8A

Z]5dP5DDG9
BDEADBDA/40

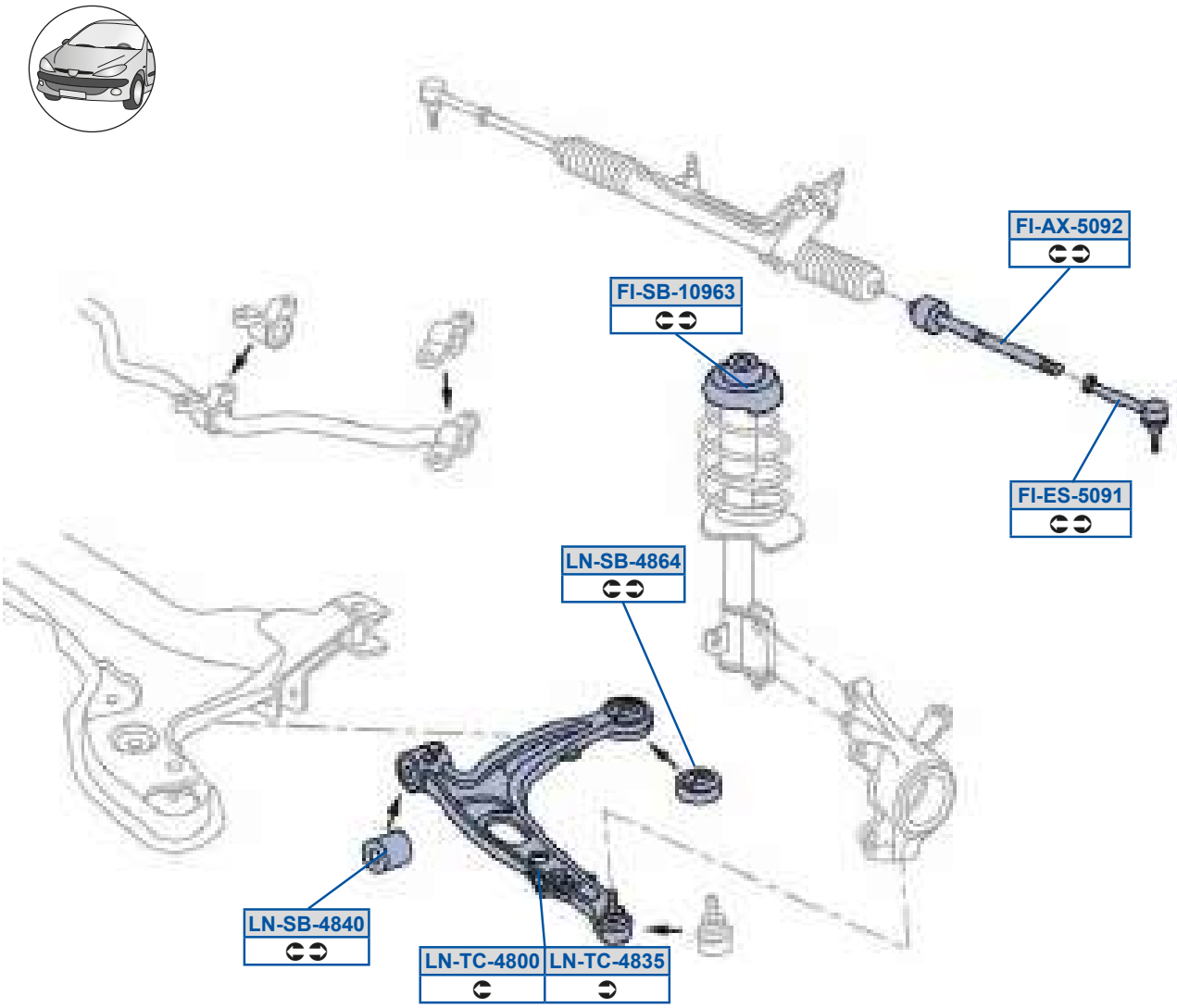
FI-AX-5092
FI-SB-10963
FI-ES-5091
LN-SB-4864
LN-SB-4840
LN-TC-4800
LN-TC-4835

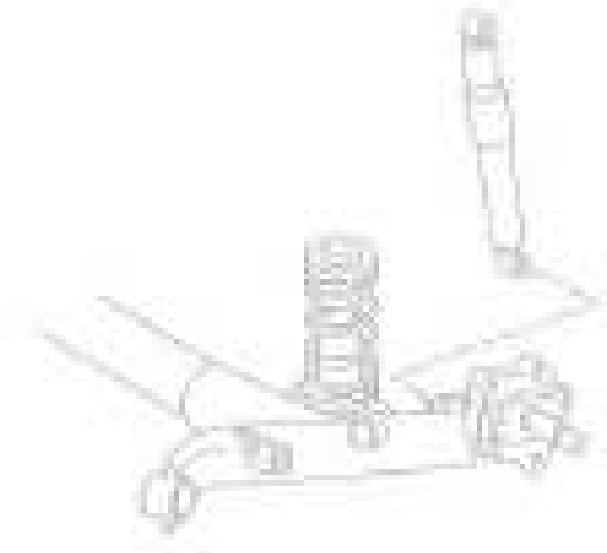

TV6Oi 5C8G>
EEAD9C79

TV6Sd5C8G9
EEAD9C7A

TV6dP598GDA

Z] 5dP5BFB8
C7E7A9A8 /4C3C7E7A9A9 /4C

Z] 5dP5BFDB
C7E7A9A8 /4C3C7E7A9A9 /4C

Z] 5eQ5BF88
C7E7A9A93C8FAG98G

Z] 5eQ5BFAC
C7E7A9A83C8FAG98F

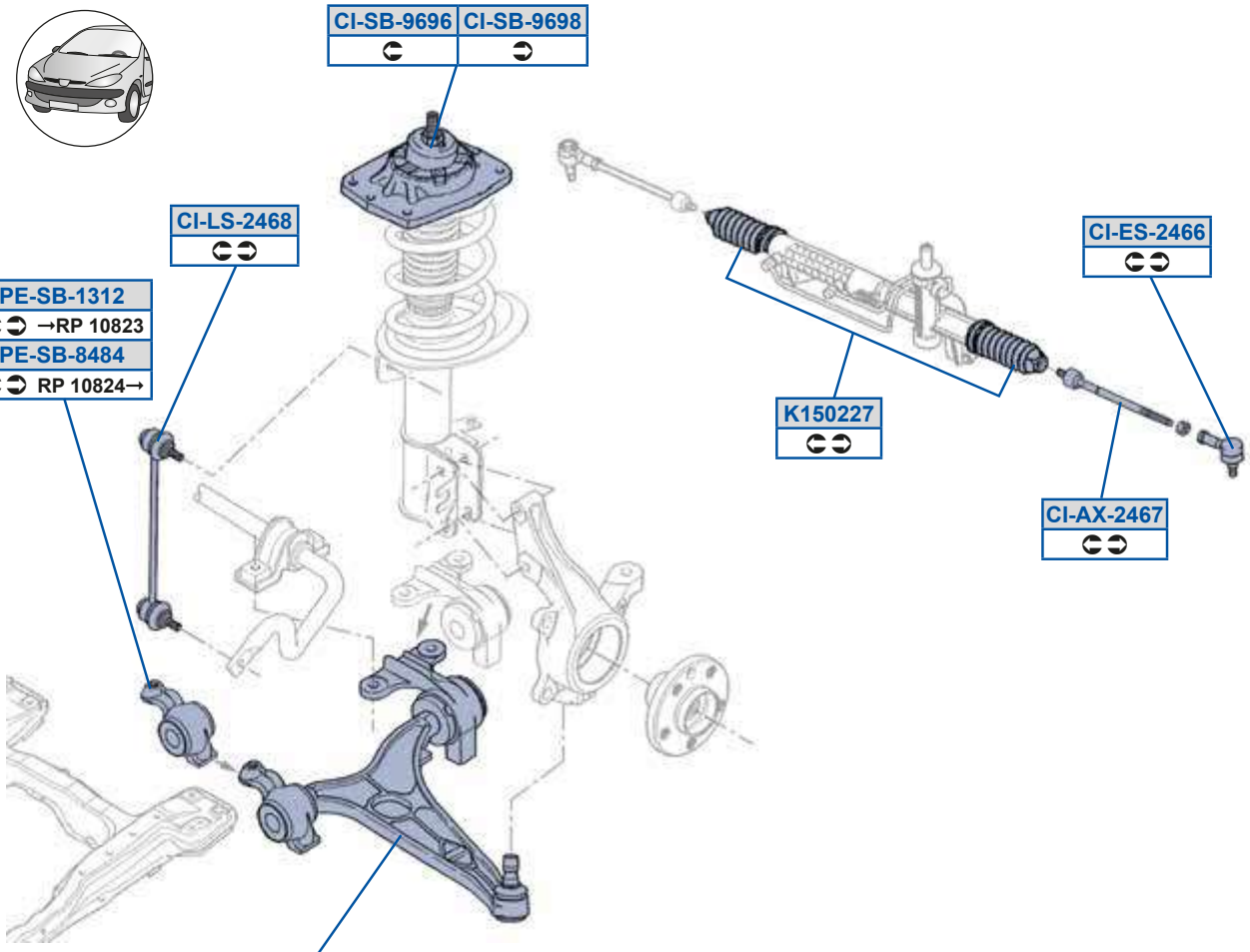

CI-WP-2464	CI-WP-2465
Ø 17mm →RP 10823	Ø 17mm →RP 10823
PE-TC-8483	PE-TC-8482
Ø 17mm RP 10824→	Ø 17mm RP 10824→
CI-TC-7298	CI-TC-7299
Ø 19mm ✓ Eng. 4HP / 4HR, HT	Ø 19mm ✓ Eng. 4HP / 4HR, HT

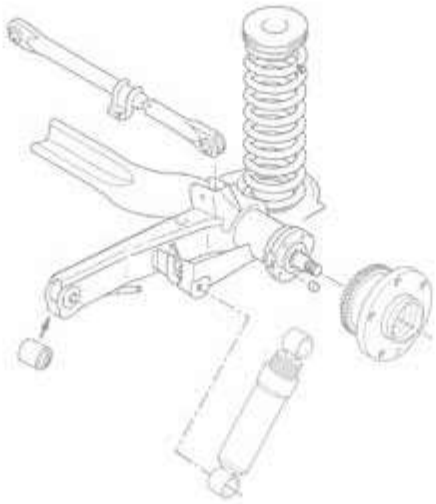

QV5Oi 5>BDE
EEAD99F7

QV5h a5>BDC
8ABDAFC7F73GAC78BFF

QV5Sd5>BDD
EEAD99EG

Y9C8>>E
B7DDE7

QV5Zd5>BDF
8AA897G7F7

aS5dP59A9>
AC98V73AC98V8

QV5dP5GDGD
C7AC9G3C7ACAF

aS5dP5FBFB
AC97 7 /403AC98t 9 /40

QV5dP5GDGF
C7AC9G3C7ACAF

aS5eQ5FBF>
8AC8AGG7F738ACD7D87F7

QV5eQ5E>GF
8B789AGCF738BGEB7F7F7

aS5eQ5FBFA
8AC8AGF7F738ACD7D77F7

QV5eQ5E>GG
8B789AGBF738BGEB7E7F7

QV5h a5>BDB
8ABDAFB7F73GAC78BFE

k 0FB801	997GC 8G78A		

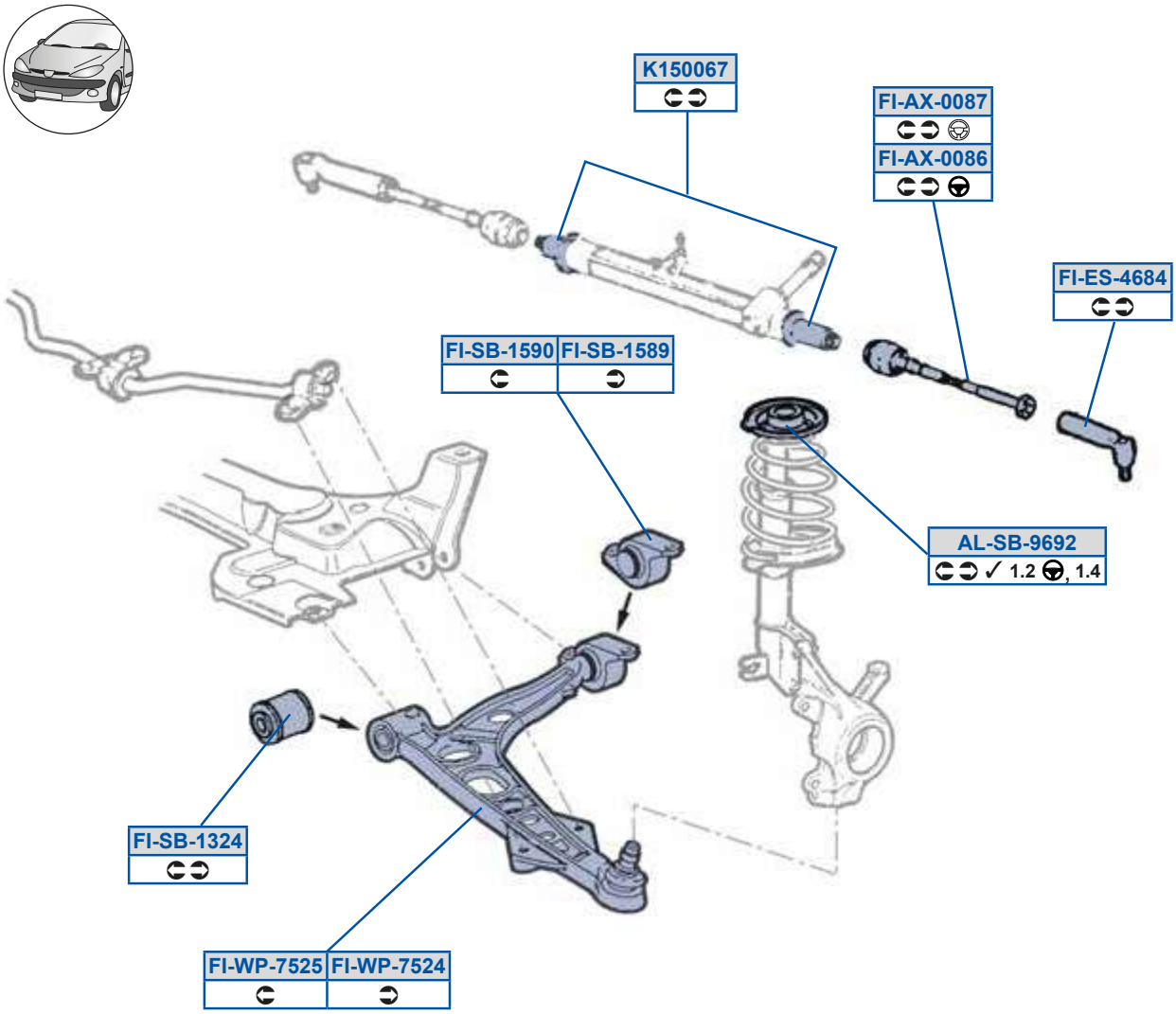

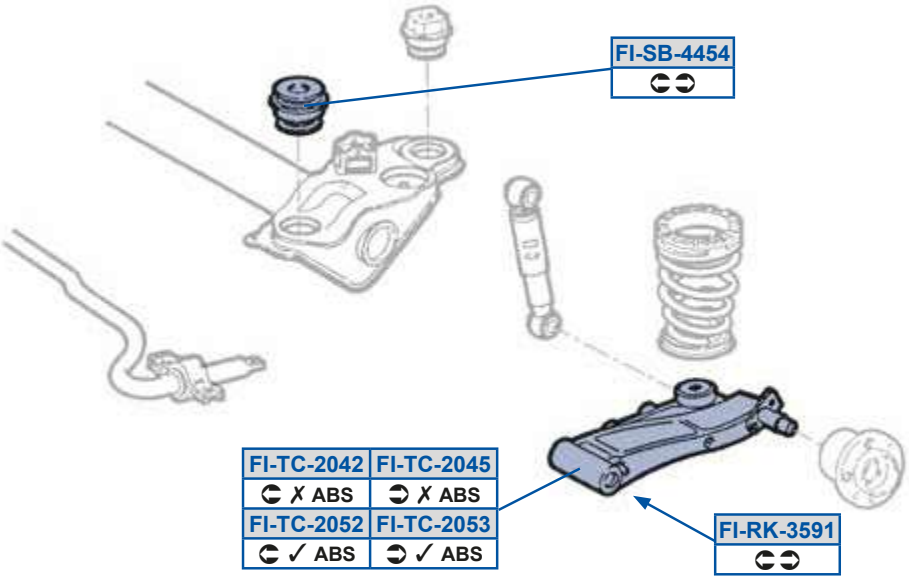

OZ5dP5GDG>
BDBC9EB8

TV5dP5BBCB
BDBEDECC

TV5Oi 538FD
GGBCCD9

TV5eQ5>8B>
EEADC8B

TV5Oi 538FE
EE78BG83GGBDGBF

TV5eQ5>8BC
EEADC8C

TV5Sd5BDFB
EEC99FC3GGBDGBG

TV5eQ5>8C>
EEDGG77

TV5c Y5ACG9
EE8G7D9

TV5eQ5>8CA
EEDGG78

TV5dP59A>B
EDEACF8

TV5h a5EC>B
BDB79DF93BDB79DFB

TV5dP59CFG
EEECABA

TV5h a5EC>C
BDB79DF3BDB79DF8

TV5dP59CG8
EEECABB

Y9C88DE
AD79787F3E7EGAB7

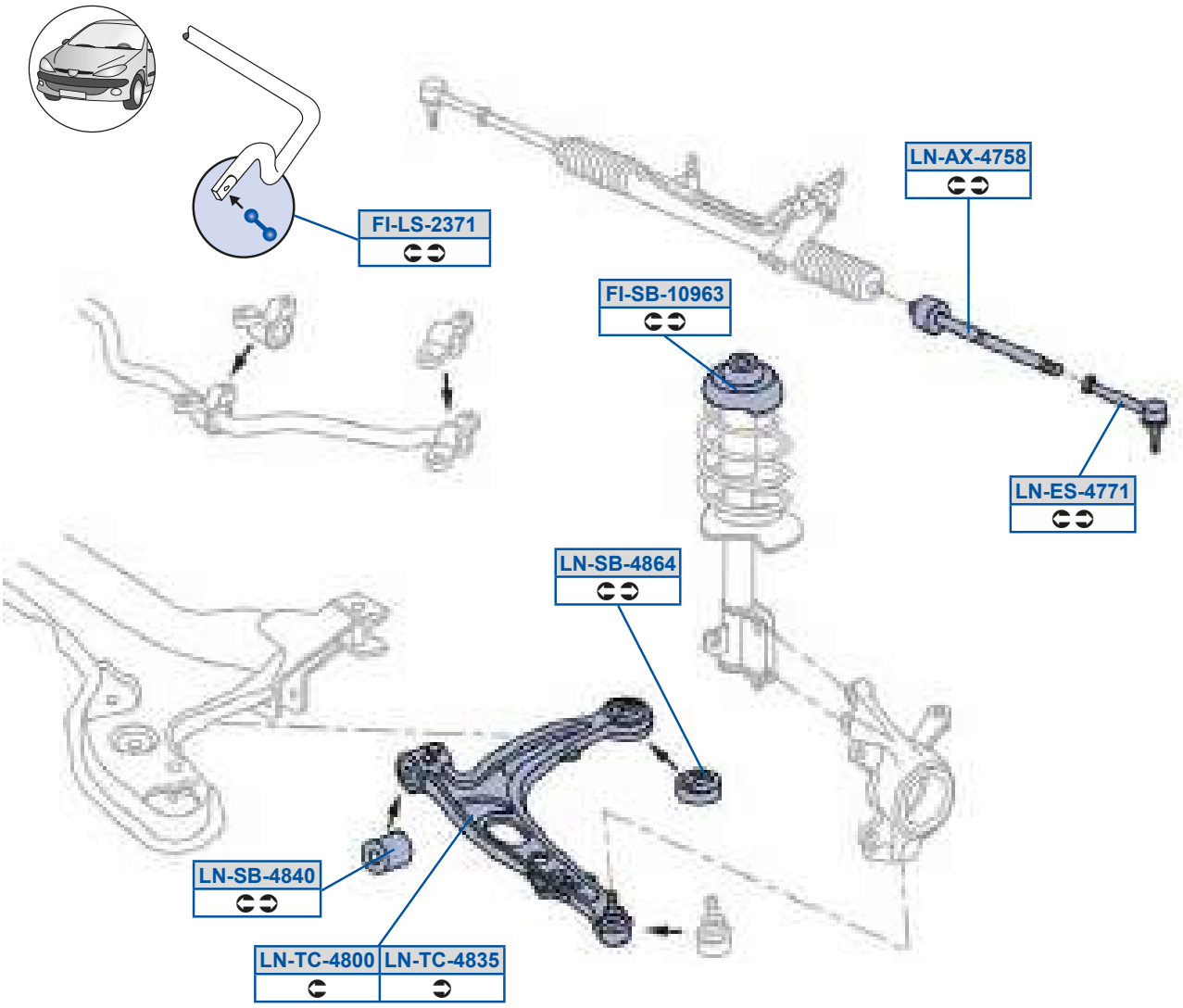
FI-LS-2371
LN-AX-4758
FI-SB-10963
LN-ES-4771
LN-SB-4864
LN-SB-4840
LN-TC-4800
LN-TC-4835

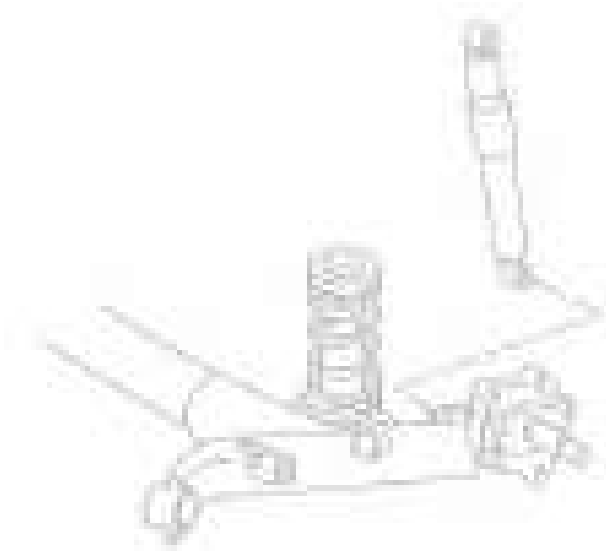

TV5Zd5>AE9
C7E77BDB3C7E77GB8

TV5dP598GDA

Z] 5Oi 5BECF
EEAD9AF7

Z] 5Sd5BEE9
EEAD9AF8

Z] 5dP5BFB8
C7E7A9A8 /40 3C7E7A9A9 /40

Z] 5dP5BFDB
C7E7A9A8 /40 3C7E7A9A9 /40

Z] 5eQ5BF88
C7E7A9A93C8FAG98G

Z] 5eQ5BFAC
C7E7A9A83C8FAG98F

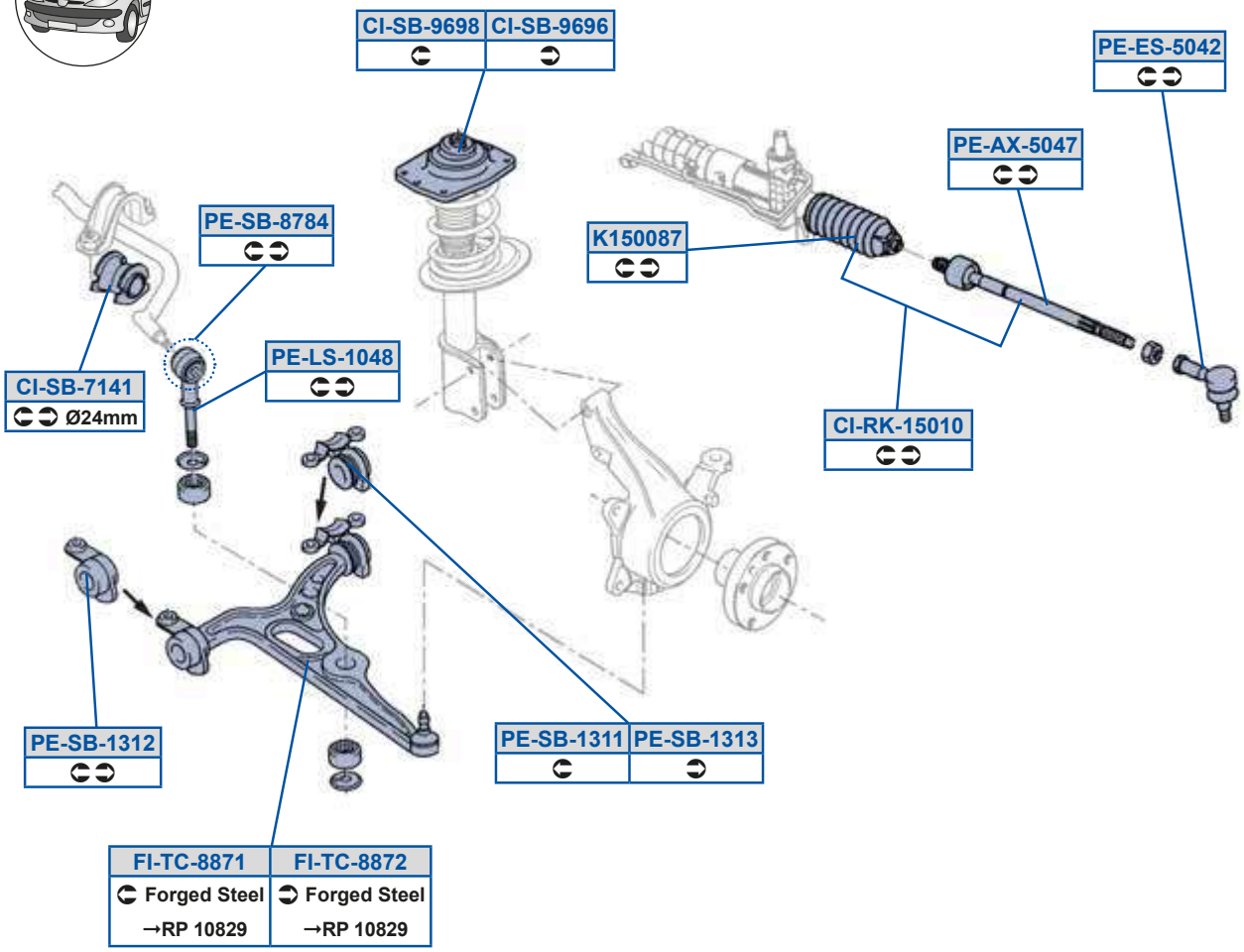
CI-SB-9698
CI-SB-9696
PE-ES-5042
PE-AX-5047
PE-SB-8784
K150087
PE-LS-1048
CI-SB-7141
Ø24mm
CI-RK-15010
PE-SB-1312
PE-SB-1311
PE-SB-1313
FI-TC-8871
Forged Steel
→RP 10829
FI-TC-8872
Forged Steel
→RP 10829

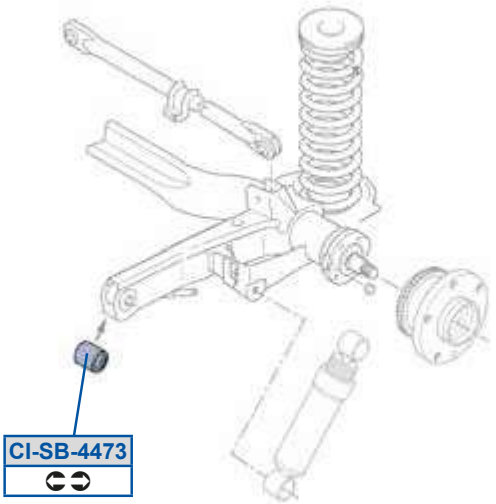
CI-SB-4473

QW5c Y59C898
GCDDGC7FF7

aS5Oi 5C8BE
GCDDGC7FF7

QW5dP5BBEA
8BEGECG7F73C8C9D8

aS5Sd5C8B>
8A7D77A7F73GB7B7CG7F7

QW5dP5E9B9
8A7CEF97F7

aS5Zd598BF
8A7FDDB7F738A8EB9C7F7

QW5dP5GDGD
C7AC9G3C7ACAF

aS5dP59A99
8A7CCC87F73AC97QC /40

QW5dP5GDGF
C7AC9G3C7ACAF

aS5dP59A9>
AC98V73AC98V8

TW5eQ5FFE9
8A8A7FA7F738A8DEAC7F7

aS5dP59A9A
8A7CCC97F73AC98DB /40

TW5eQ5FFE>
8A8A7FB7F738A8DEAD7F7

aS5dP5FEFB
8A8A7CD7F7

Y9C88FE
GB7B7DDB8F

ZO] R c_ gSc

G87998 ORV[Q1	8G7FA	8E7G8	RSTS] RSc OZR1	8F7G8	8; 79D
RSTS] RSc Qtu é OZA9D1	8G7G8	8F7GA	RSTS] RSc aé/ OZA9D1	987GC	8; 79D
RSTS] RSc a t y 7QÉt é OZA9D1	8978E	8; 79D	RSTS] RSc a t y 7QÉt é OZR1	8G7G8	8; 79D
RSTS] RSc d t é h t' OZA9D1	8G7G8	8; 79D	RSTS] RSc d t é h t' OZR1	8F7G8	8; 79D
cO] US c_gSc WOOS7] 4/O7P7[4/P[4:S7] 1	8E7E8	9; 7GC			

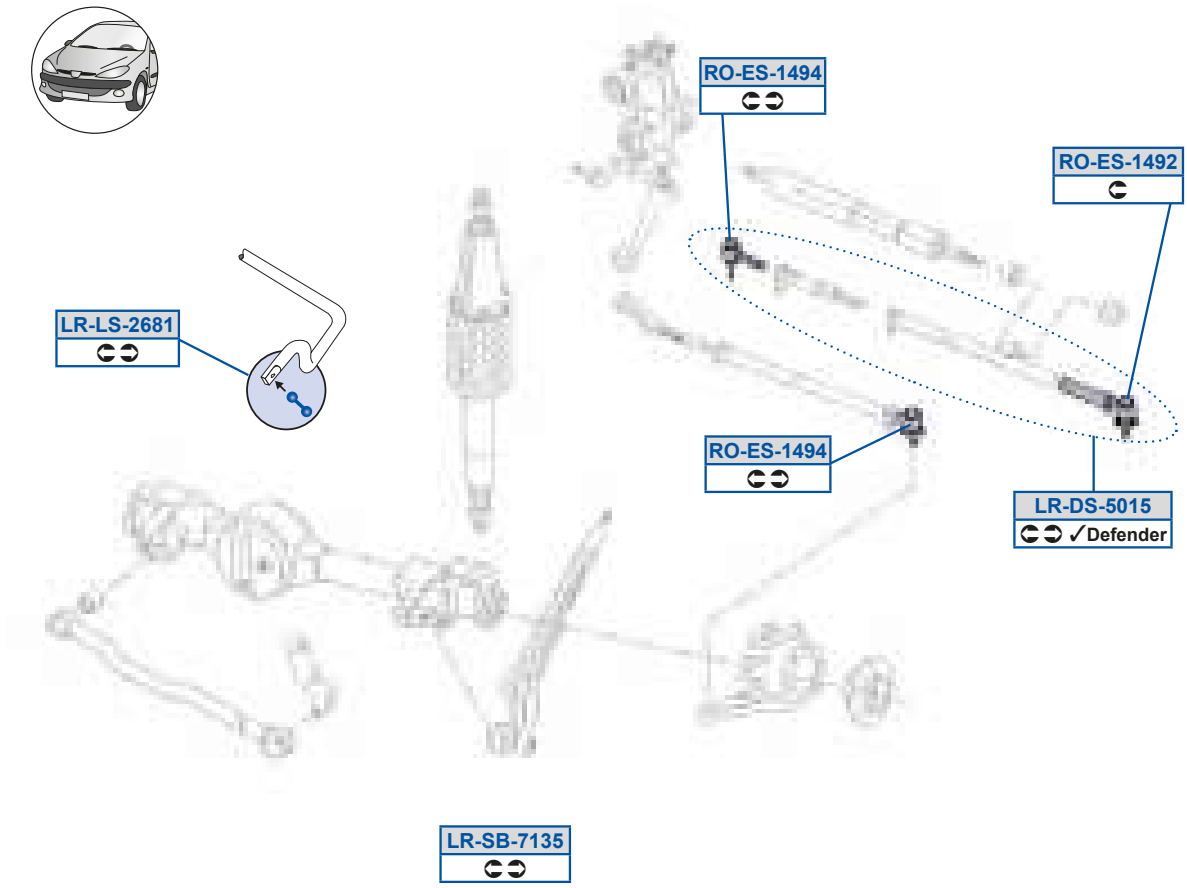

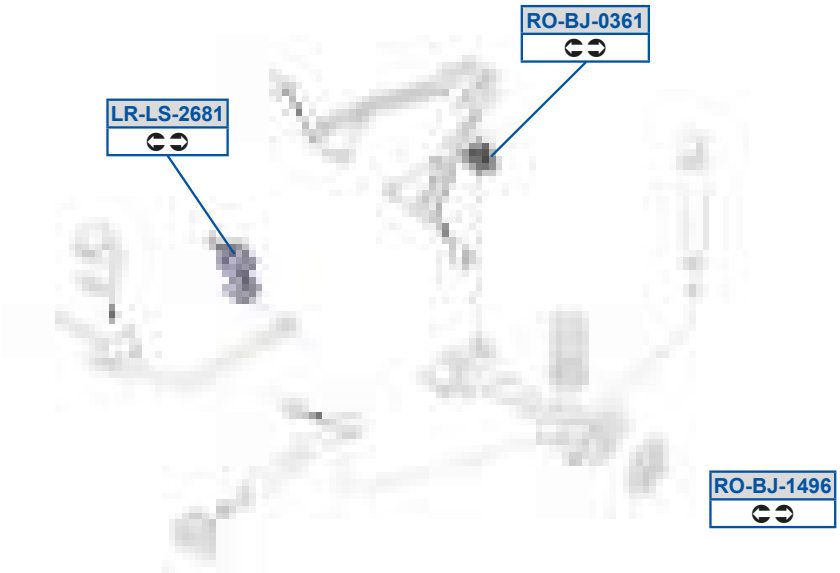

MOOG

Zc 5Rd5C89C
dnQGEBA

Zc 5Zd5>DF9
dt Q8FFF

Zc 5dP5E9AC
0dn AB87

c_ 5PX58AD9
CE9AAE30dn8EGG

c_ 5PX59BGD
CE9AAE30dn8EGG

c_ 5Sd59BG>
dnQBEBC3dt Q8FFE

c_ 5Sd59BGB
dt Q8FFD3nt Q8F77

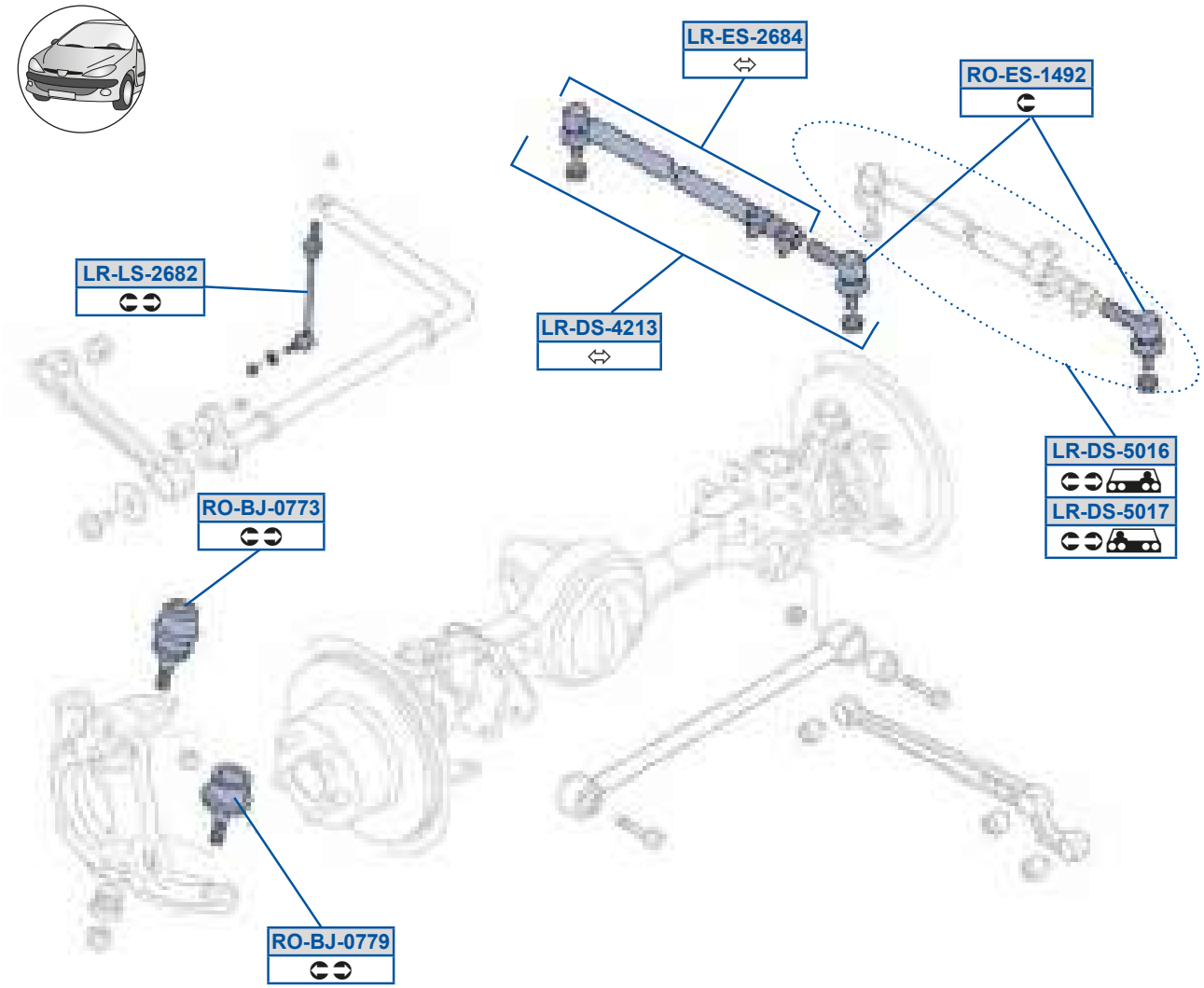
LR-ES-2684
RO-ES-1492
LR-LS-2682
LR-DS-4213
LR-DS-5016
LR-DS-5017
RO-BJ-0773
RO-BJ-0779

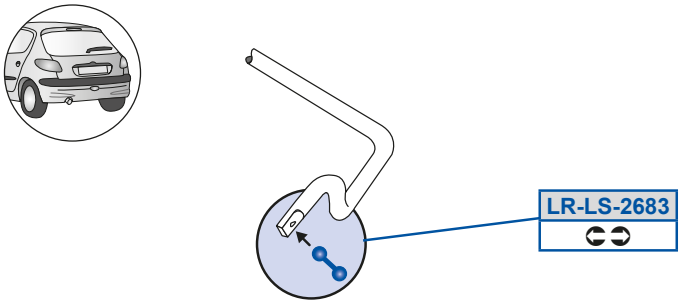
LR-LS-2683

Zc 5Rd5B>9A
t W7777873t W877777

Zc 5Rd5C89D
I VU7777C73I VU877787

Zc 5Rd5C89E
I VU7777B73I VU877777

Zc 5Sd5>DFB
I To7777B73I To8777E7

Zc 5Zd5>DF>
nPa 87799A

Zc 5Zd5>DFA
nUR877DF9

c _ 5PX58EEA
Tt QACE7

c _ 5PX58EEG
Tt QACE8

c _ 5Sd59BG>
dnQBEBC3dt Q8FFE

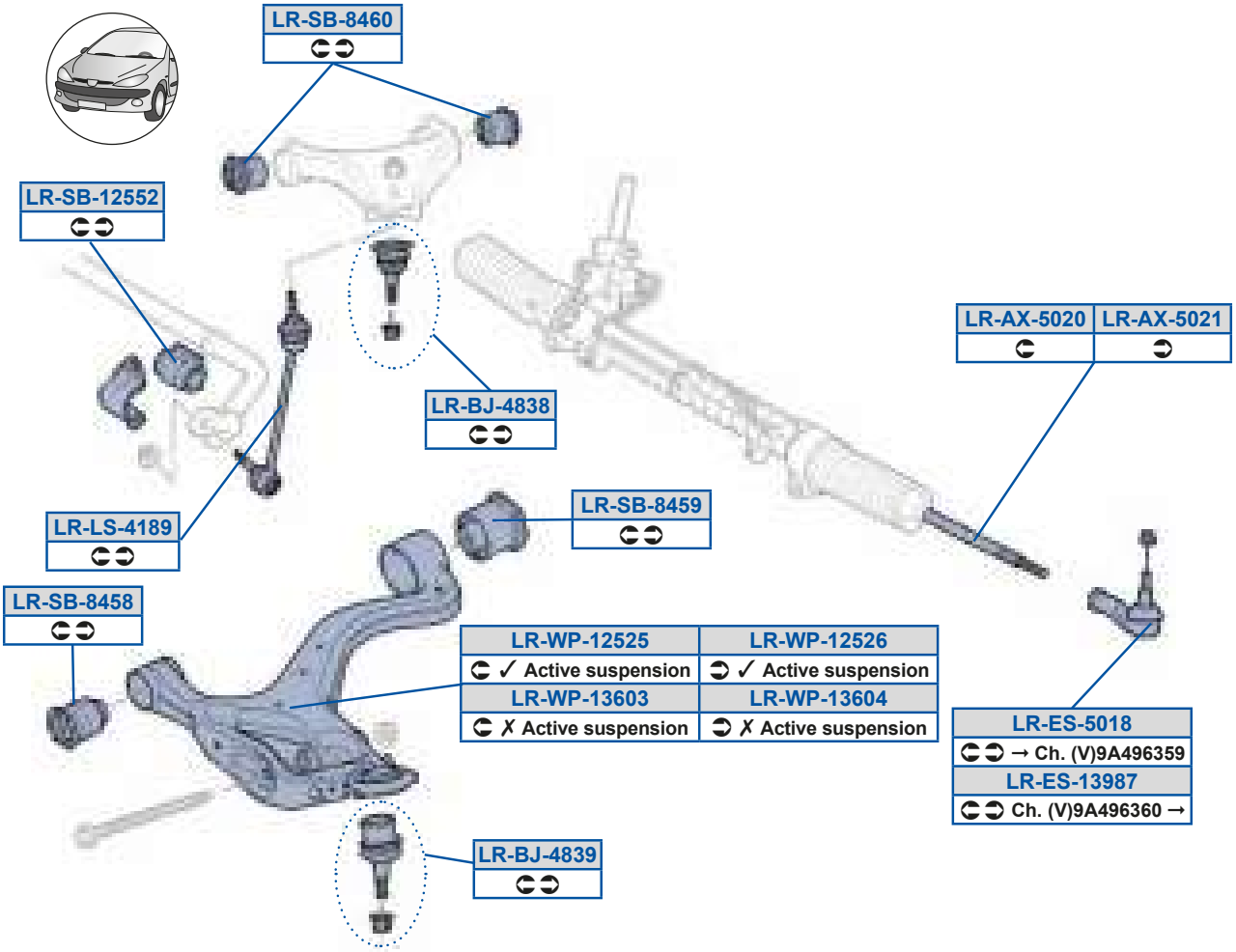
LR-SB-8460
LR-SB-12552
LR-BJ-4838
LR-AX-5020
LR-AX-5021
LR-LS-4189
LR-SB-8459
LR-SB-8458
LR-WP-12525
✓ Active suspension
LR-WP-12526
✓ Active suspension
LR-WP-13603
✗ Active suspension
LR-WP-13604
✗ Active suspension
LR-ES-5018
→ Ch. (V)9A496359
LR-ES-13987
Ch. (V)9A496360 →
LR-BJ-4839

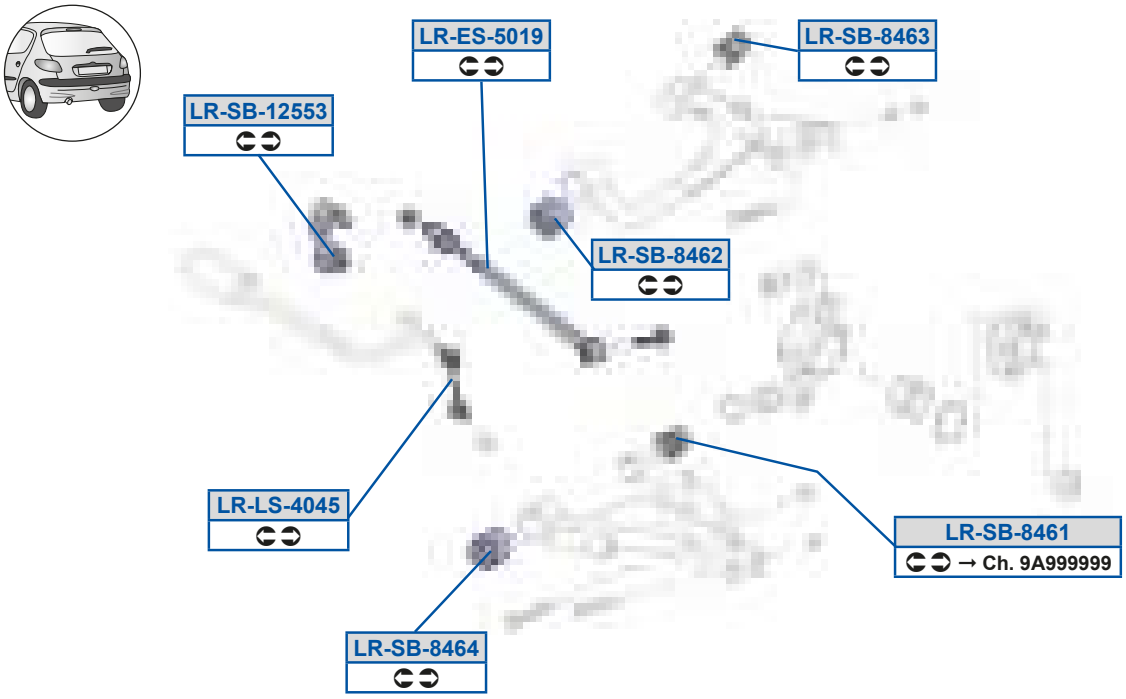
LR-ES-5019
LR-SB-8463
LR-SB-12553
LR-SB-8462
LR-LS-4045
LR-SB-8461
→ Ch. 9A999999
LR-SB-8464

Zc 5Oi 5C8>8
I TYC77797

Zc 5Zd5B9FG
Zn78B8BC3nPa C77887

Zc 5dP5FBDB
nU C77988

Zc 5Oi 5C8>9
I TYC77787

Zc 5dP59>CC>
Zn78CAAG3nP 777CE8

Zc 5h a59>C>C
Zn79F9BG3nPXC778GA

Zc 5PX5BFAF
nPYC777A7

Zc 5dP59>CCA
Zn78CAAD

Zc 5h a59>C>D
Zn79F9BC3nPXC778FA

Zc 5PX5BFAG
nPYC777B73nPYC778F7

Zc 5dP5FBCF
nP C77A88

Zc 5h a59AD8A
Zn79F9C83Zn79GA7C

Zc 5Sd59AGFE
Zn787DE93I XPC777F7

Zc 5dP5FBCG
Zn79C8CG3Zn7C8CFD

Zc 5h a59AD8B
Zn79F9BE3Zn79GA7A

Zc 5Sd5C89F
Zn787DE83Zn787DE9

Zc 5dP5FBD8
nP C77A78

Zc 5Sd5C89G
nURC777FA

Zc 5dP5FBD9
nU C77888

Zc 5Zd5B8BC
nUR777A883nUR777A89

Zc 5dP5FBDA
nU C778A83nU C77A77

ZO] R c _ gSc

RWQ_gSck Wg 0ZA9G1	8G78G	RWQ_gSck Wg 0ZO1	8G78G

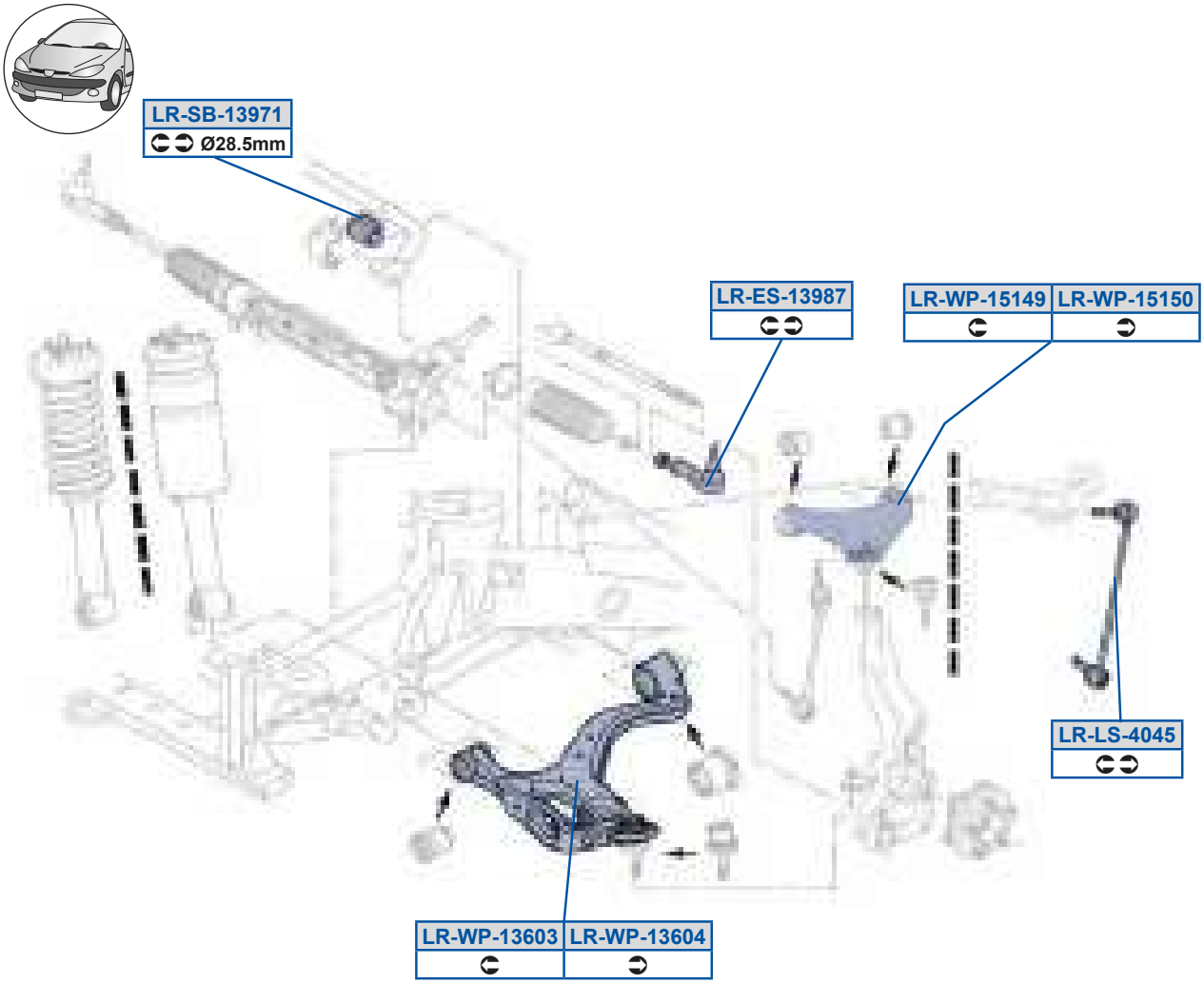

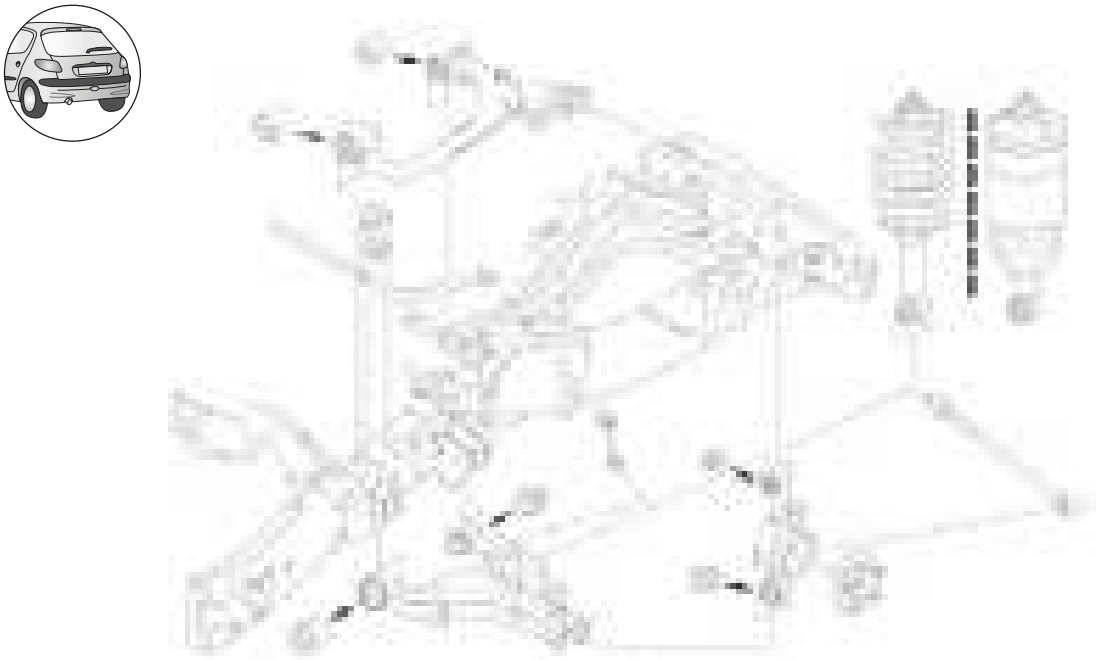

MOOG

Zc 5Sd 59AGFE
Zn787DE93I XPC777F7

Zc 5Zd 5B8BC
nUR777A883nUR777A89

Zc 5dP 59AGE9
Zn78FABD

Zc 5h a 59AD8A
Zn79F9C83Zn79GA7C

Zc 5h a 59AD8B
Zn79F9BE3Zn79GA7A

Zc 5h a 59C9BG
Zn78B8AA3Zn7C8D8C

Zc 5h a 59C9C8
Zn78B8A93Zn7C8D8B

ZO] R c_ gSc

c0] US c_gSc Sg_bf S OZCAF1	8G799	c0] US c_gSc Sg_bf S OZg1	8D799
c0] US c_gSc Sg_bf S Q x áı x OZCAF1	8; 79D		

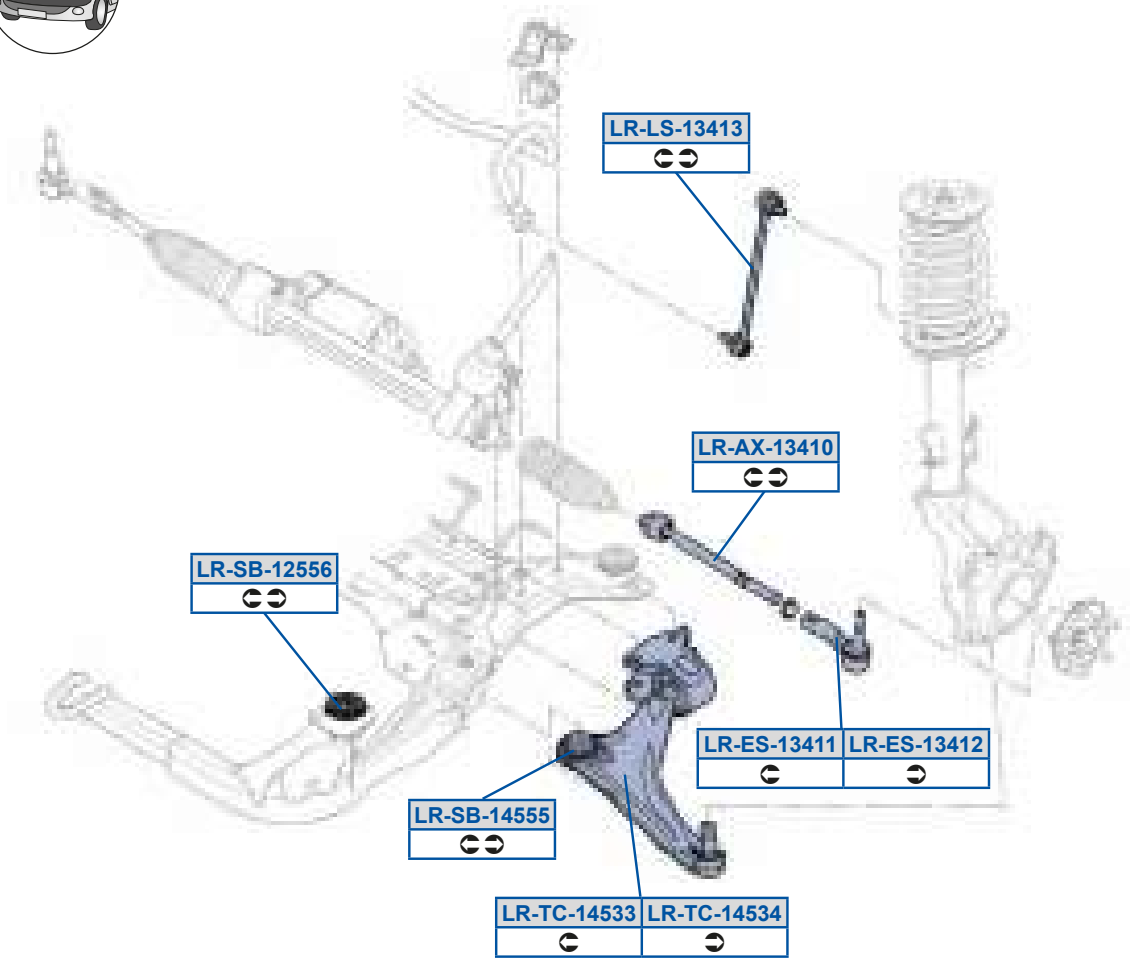

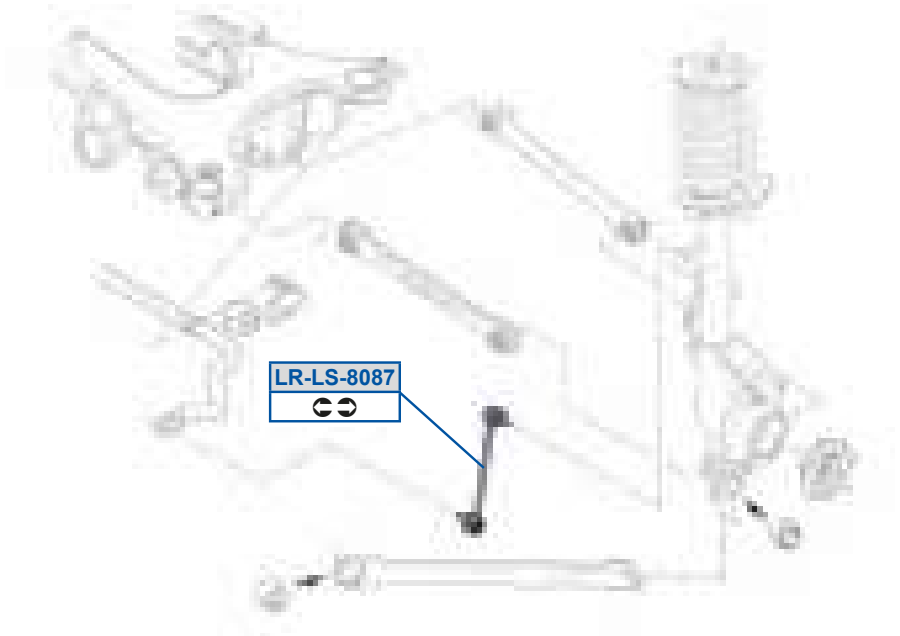

MOOG

Zc 5Oi 59AB98
Zn79D9E8

Zc 5Sd59AB99
Zn79ECE7

Zc 5Sd59AB9>
Zn79D9DE

Zc 5Zd59AB9A
Zn79BBEB

Zc 5Zd5F8FE
Zn779FED

Zc 5dP59>CCD
Zn789E9B

Zc 5dP59BCCC
Zn79BBE9 /40Zn79BBEA /40

Zc 5eQ59BCAA
Zn79BBEA3Zn7BCF79

Zc 5eQ59BCAB
Zn79BBE93Zn7BCF7A

ZO] R c _ gSc

TcSSZO] RSc (Z] 1	8; 7GF 9878D	TcSSZO] RSc d y e	8; 7GF 9878D
TcSSZO] RSc d y e (ZA9B1	98788 9878D		

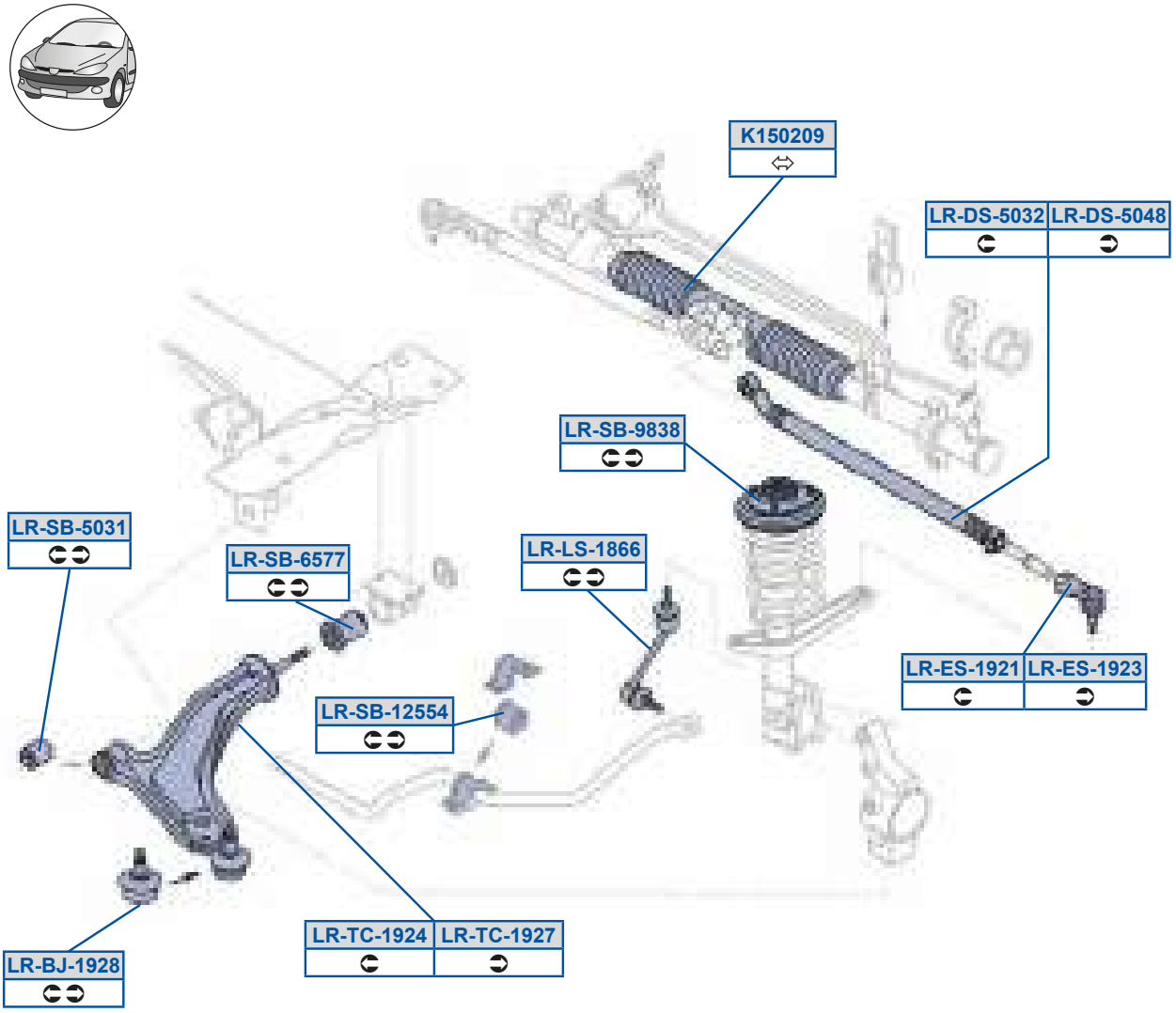

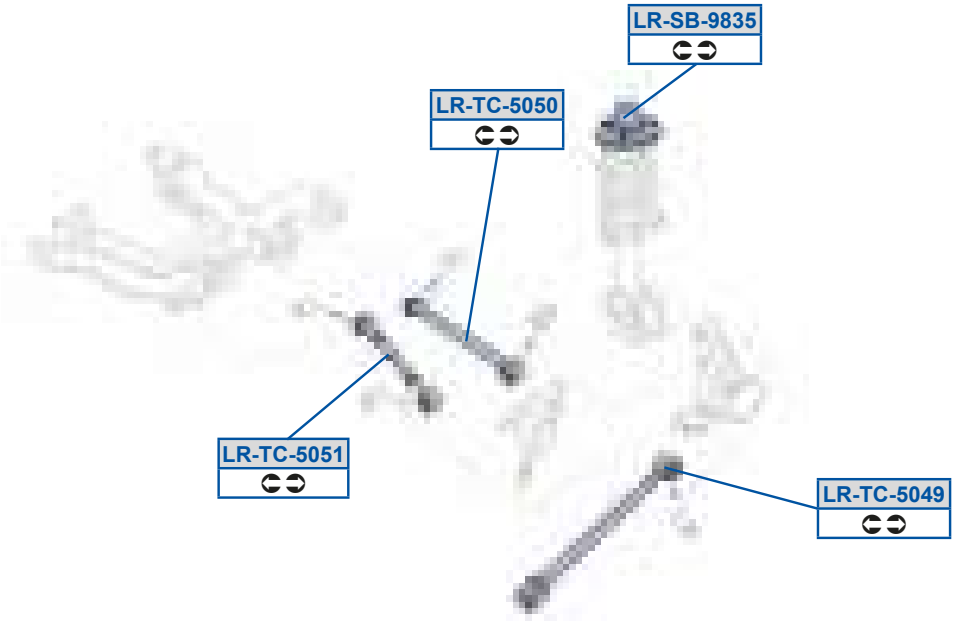

MOOG

Y9C8>8G

Zc 5PX59G>F
nPX879BC7

Zc 5Rd5C8A>
I TY8777GA3I TY8777GC

Zc 5Rd5C8BF
I TY8777FA3I TY8777FC

Zc 5Sd59G>9
XI P8779A73I XP8779A7

Zc 5Sd59G>A
XI P8779973I XP877997

Zc 5Zd59FDD
nPa 8778E73nPa 8778E8

Zc 5dP59>CCB
nP 777787

Zc 5dP59>CCD
Zn789E9B

Zc 5dP59>CCE
Zn77888F

Zc 5dP5C8A9
nP 8788D73nP 878EG7

Zc 5dP5DCEE
nP 878EF7

Zc 5dP5GFAC
ni T8777F73ni T87789A

Zc 5dP5GFAF
ndn8777F7

Zc 5eQ59G>B
nPX879BC73nPX879GA7

Zc 5eQ59G>E
nPX879BB73nPX879G97

Zc 5eQ5C8BG
nUR7777G73nUR877E77

Zc 5eQ5C8C8
nUR777887

Zc 5eQ5C8C9
nUR7777D7

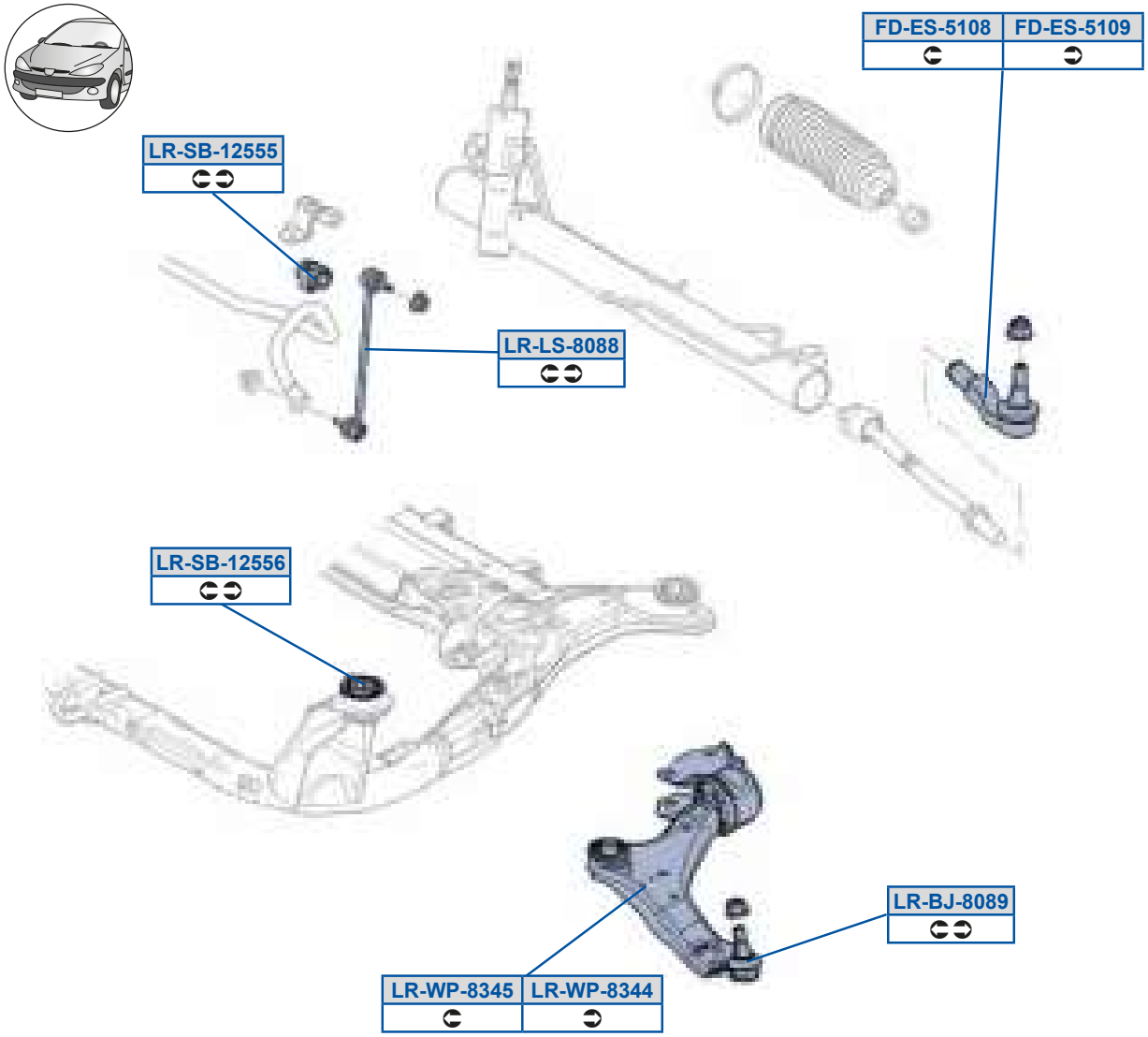
FD-ES-5108
FD-ES-5109
LR-SB-12555
LR-LS-8088
LR-SB-12556
LR-BJ-8089
LR-WP-8345
LR-WP-8344

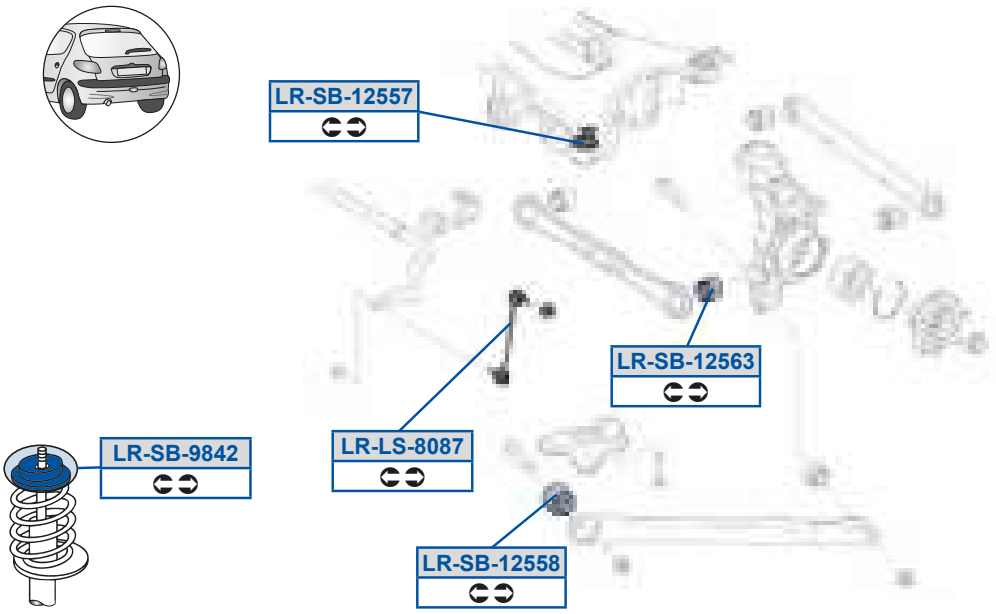
LR-SB-12557
LR-SB-12563
LR-SB-9842
LR-LS-8087
LR-SB-12558

TR5Sd5C98F
Zn779D87

TR5Sd5C98G
Zn779D7G

Zc5PX5F8FG
Zn779D9B3Zn779D9C

Zc5Zd5F8FE
Zn779FED

Zc5Zd5F8FF
Zn779D9D

Zc5dP59>CCC
Zn77CDBG

Zc5dP59>CCD
Zn789E9B

Zc5dP59>CCE
Zn77888F

Zc5dP59>CCF
Zn7788F9

Zc5dP59>CDA
Zn7788FB

Zc5dP5GFB>
Zn7788AB

Zc5h a5FABB
Zn779D9B3Zn77E97C

Zc5h a5FABC
Zn779D9C3Zn77E97D

ZO] R c_ gSc

c0] US c_gSc W0Za1	8E7GB 8A78;		

cr xv c v W0BE79GGB5L 8A7>88>1

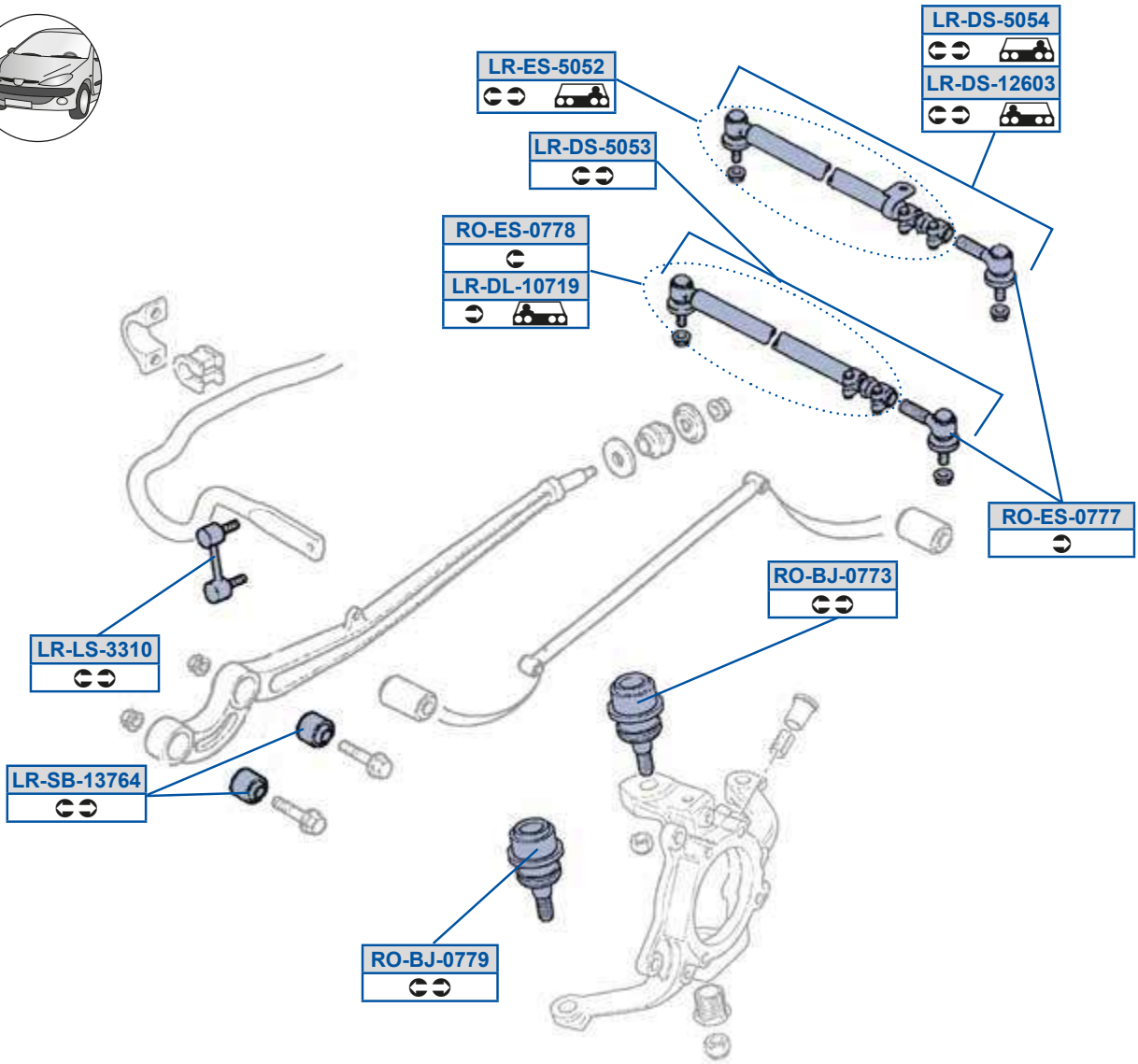

Zc 5RZ598E9G
I SY7777B73ot Q8FEA

Zc 5Rd59>D8A
OdnAF9B3I VU7777D7

Zc 5Rd5C8CA
OdnAF9D3t W777797

Zc 5Rd5C8CB
OdnAF9C3I VU7777E7

Zc 5Sd5C8C>
ot Q8FE9

Zc 5Zd5AA98
OdnAA7B

Zc 5dP59AEDB
OdnAAA9

c _ 5PX58EEA
Tt QACE7

c _ 5PX58EEG
Tt QACE8

c _ 5Sd58EEE
I To7777873I To8777D7

c _ 5Sd58EEF
ot Q8FE7

ZO] R c _ gSc c r xv c v WW8E79GGB 5L 8A7>88>1

ZO] R c_ gSc

c0] US c_gSc WWOZA; ; 1	8G78; 8F79;	c0] US c_gSc WWOZ[1	8A78; 8F79;

cr xv c v WWOBA7>88> 5L 8F7>89>1

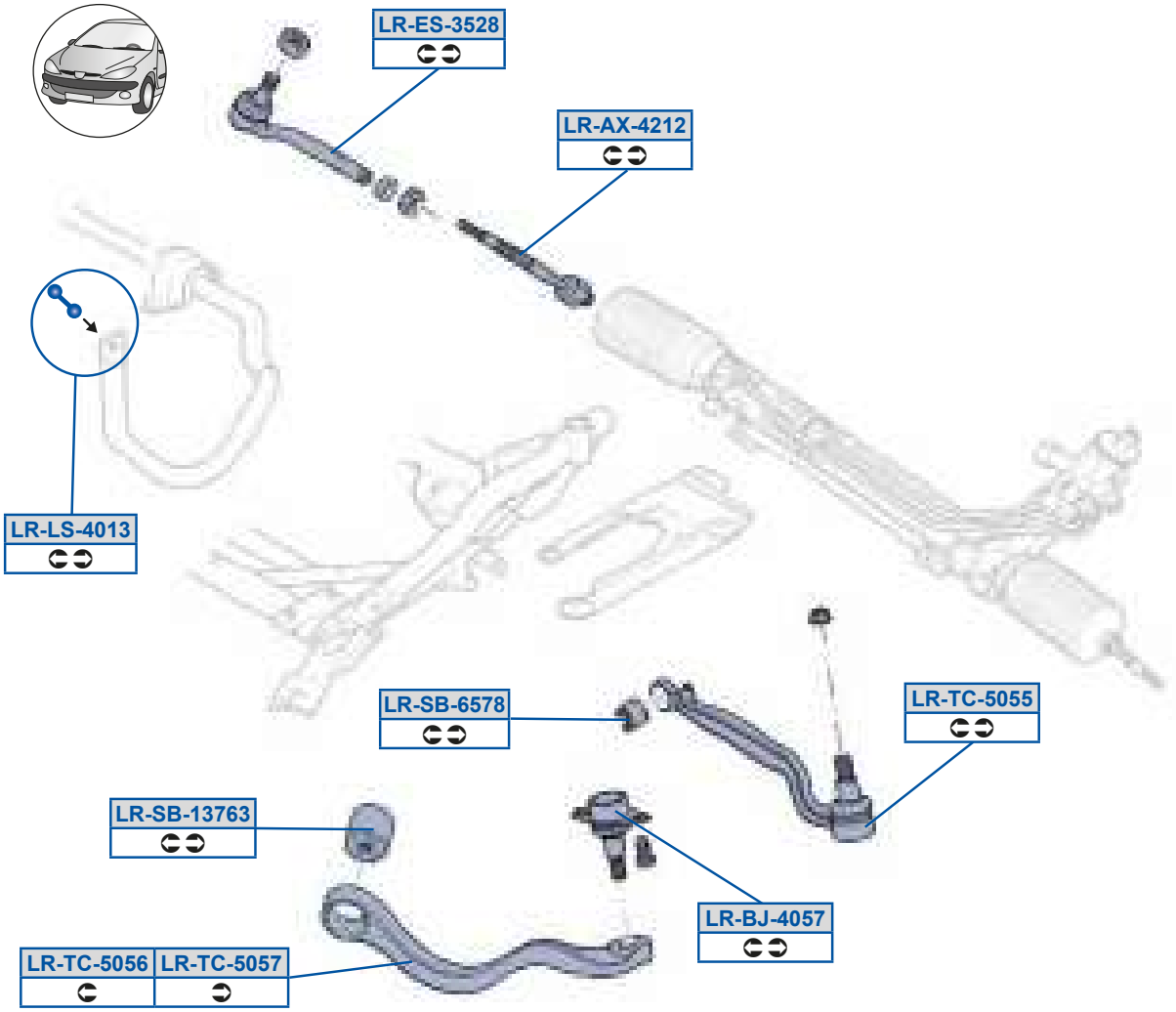

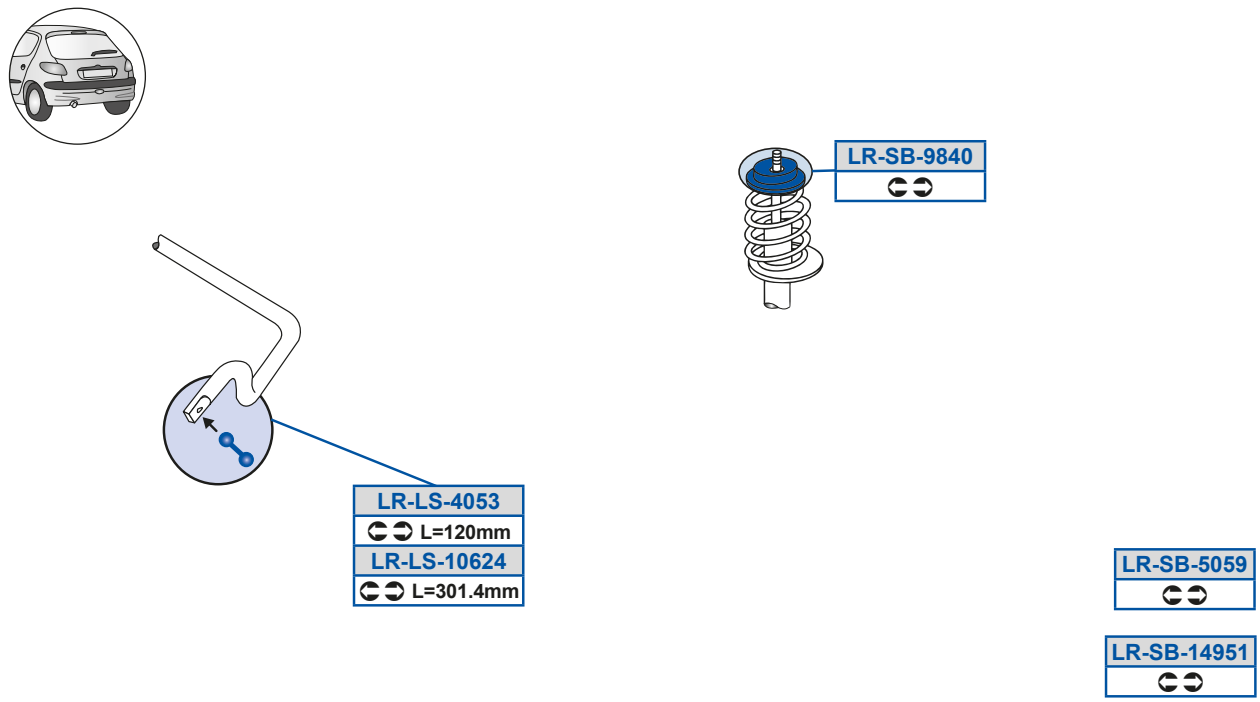

MOOG

Zc 5Oi 5B>9>
I XPC777D73t W7777B7

Zc 5dP5C8CG
nVT7779D7

Zc 5PX5B8CE
nPY7777893nPYC778C7

Zc 5dP5DCEF
nP 7777E7

Zc 5Sd5AC>F
I XPC777C73t W7777A7

Zc 5dP5GFB8
Zn78C7GD3Zn78GB7D

Zc 5Zd598D>B
Zn7A77BF3nUR7778A8

Zc 5eQ5C8CC
nPX7777D93nPXC77E87

Zc 5Zd5B89A
Zn7A77BE3nPa 777788

Zc 5eQ5C8CD
Zn78FABB3nPX7778A7

Zc 5Zd5B8CA
Zn7A77BF3ZnA77BF

Zc 5eQ5C8CE
Zn78FABA3nPX777897

Zc 5dP59AEDA
Zn78FABC3nP 777977

Zc 5dP59BGC9
nU 7777D7

ZO] R c_ gSc

c0] US c_gSc Wy 0ZB8C1	8F79;	c0] US c_gSc Wy 0ZU1	8F79;

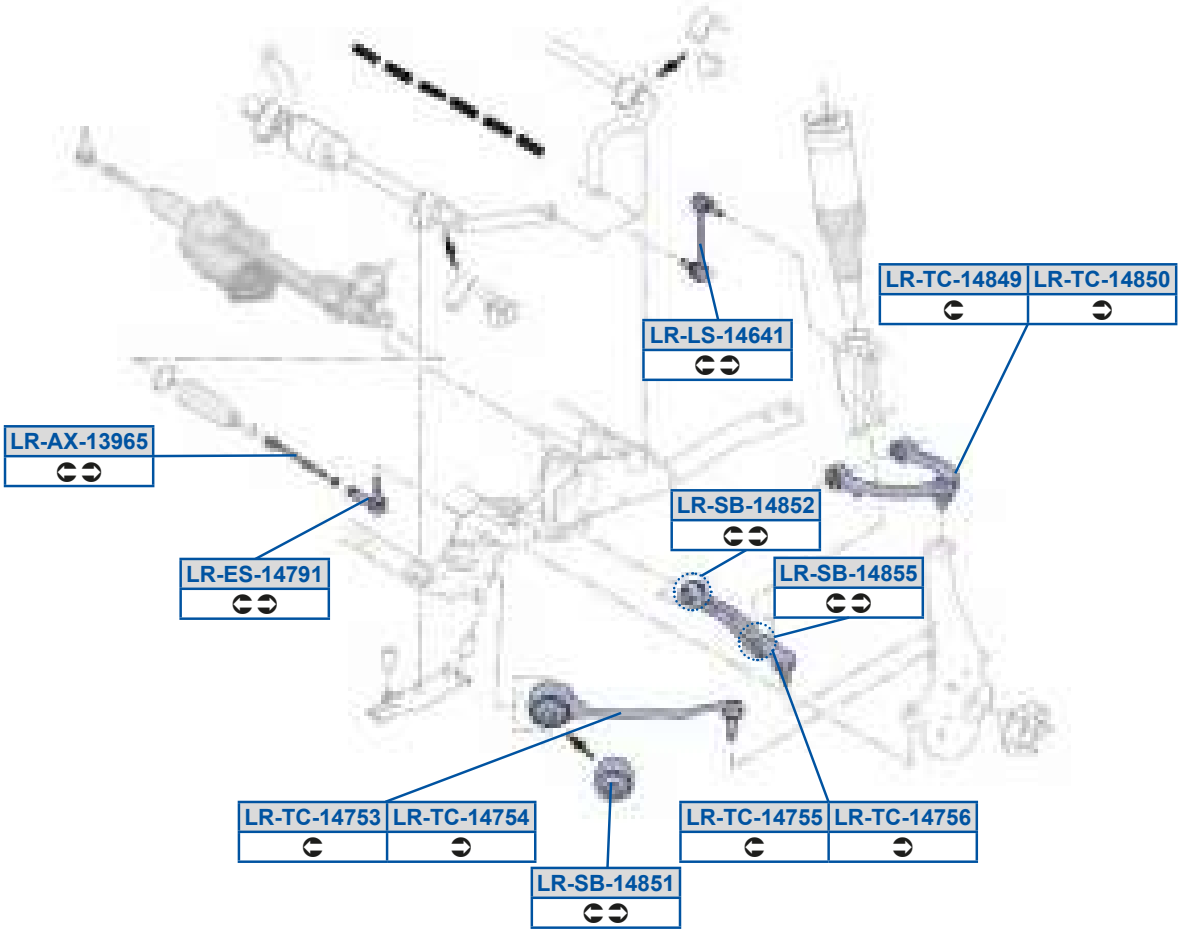

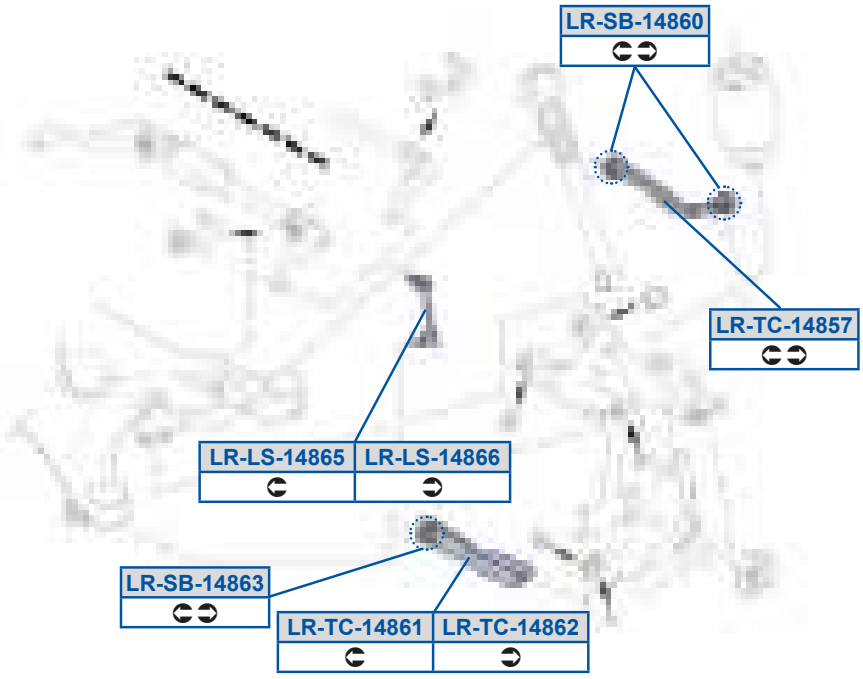

MOOG

Zc 5Oi 59AGDC
Zn7AAC9G

Zc 5dP59BFD8
Zn7AEDG7 /40

Zc 5eQ59BFCE
Zn7AEDG7

Zc 5Sd59BEG9
Zn7AACAB

Zc 5dP59BFDA
Zn7AEE77 /40&Zn7AEE79 /40

Zc 5eQ59BFD9
Zn7AEE77

Zc 5Zd59BDB9
Zn7ACBFG

Zc 5eQ59BECA
Zn7AB9973Zn7E9BDF

Zc 5eQ59BFD>
Zn7AEE79

Zc 5Zd59BFDC
Zn7AA9BA3Zn7BF7GA

Zc 5eQ59BECB
Zn7AB98G3Zn7E9BE7

Zc 5Zd59BFDD
Zn7AA9B93Zn7BF7G9

Zc 5eQ59BECC
Zn7BC9BA

Zc 5dP59BFC9
Zn7AB997 /40&Zn7E9BDF /40

Zc 5eQ59BECD
Zn7BC9B9

Zc 5dP59BFC>
Zn7AB98F /40&Zn7EFBEF /40

Zc 5eQ59BFBG
Zn7AB98B

Zc 5dP59BFCC
Zn7AB98E /40&Zn7AB98F /40

Zc 5eQ59BFC8
Zn7AB988

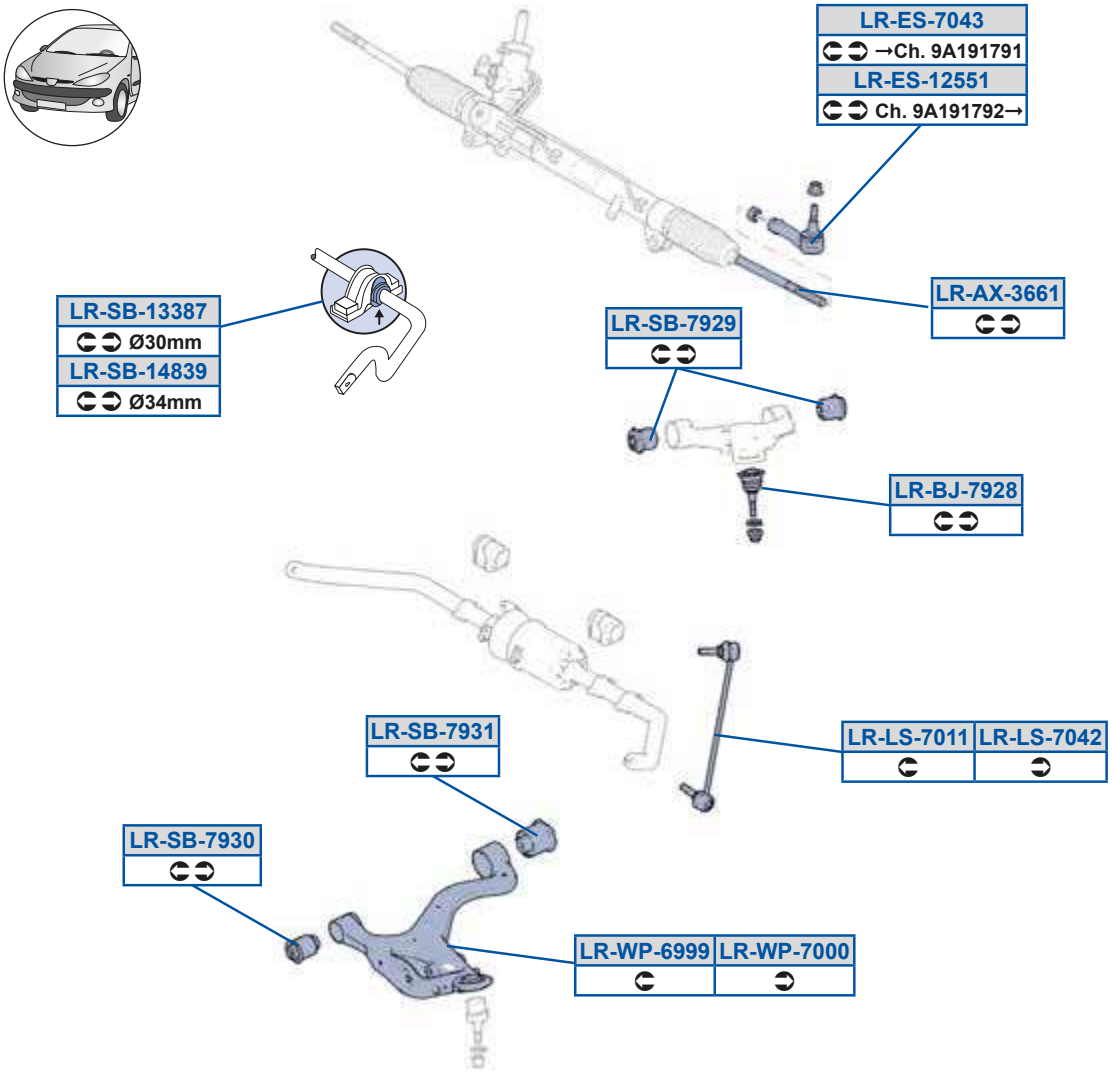
LR-ES-7043
→Ch. 9A191791
LR-ES-12551
Ch. 9A191792→
LR-AX-3661
LR-SB-13387
Ø30mm
LR-SB-14839
Ø34mm
LR-SB-7929
LR-BJ-7928
LR-SB-7931
LR-LS-7011
LR-LS-7042
LR-SB-7930
LR-WP-6999
LR-WP-7000

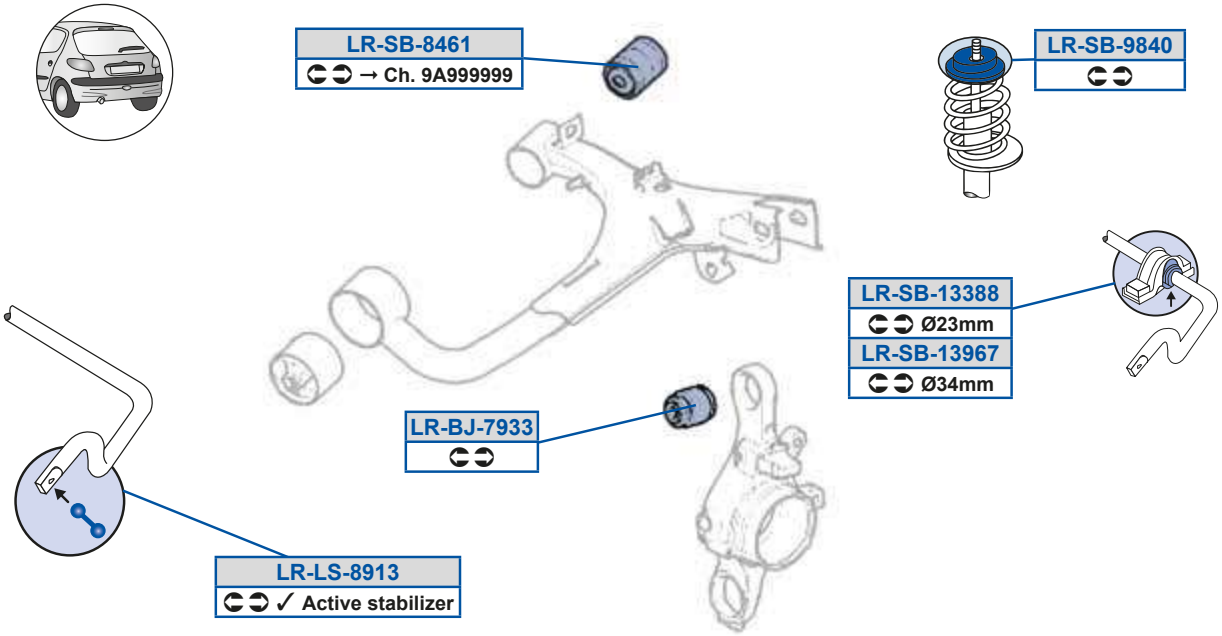
LR-SB-8461
→ Ch. 9A999999
LR-SB-9840
LR-SB-13388
Ø23mm
LR-SB-13967
Ø34mm
LR-BJ-7933
LR-LS-8913
✓ Active stabilizer

MOOG

Zc 5Oi 5ADD9
I TYC777A7

Zc 5Zd5FG9A
nURC778B7

Zc 5dP5FBD9
nU C77888

Zc 5PX5EG>F
nPYC778E7

Zc 5dP59AAFE
Zn78CABB3Zn78FABE

Zc 5dP5FBDB
nU C77988

Zc 5PX5EGA>
nVTC777A83nVTC77877

Zc 5dP59AAFF
FEZn898993Zn78FACB

Zc 5dP5GFB8
Zn78C7GD3Zn78GB7D

Zc 5PX5EGAA
nPYC77789

Zc 5dP59AGDE
n u777798

Zc 5h a5DGGG
Zn79F9C93Zn79GA7D

Zc 5Sd59>CC9
Zn787DED3I XPC777E7

Zc 5dP59BFAG
n uC777873n uC77788

Zc 5h a5E888
Zn79F9BF3Zn79GA7B

Zc 5Sd5E8BA
I XPC777B7

Zc 5dP5EG>G
Zn78E7883nP C77BBA

Zc 5Zd5E899
nPa C778C7

Zc 5dP5EGA8
nP C77BA9

Zc 5Zd5E8B>
nPa C778B7

Zc 5dP5EGA9
Zn79AE8C3Zn79CGFD

ZO] R c_ gSc

c0] US c_gSc da_ce 0ZBGB1	8B79A		

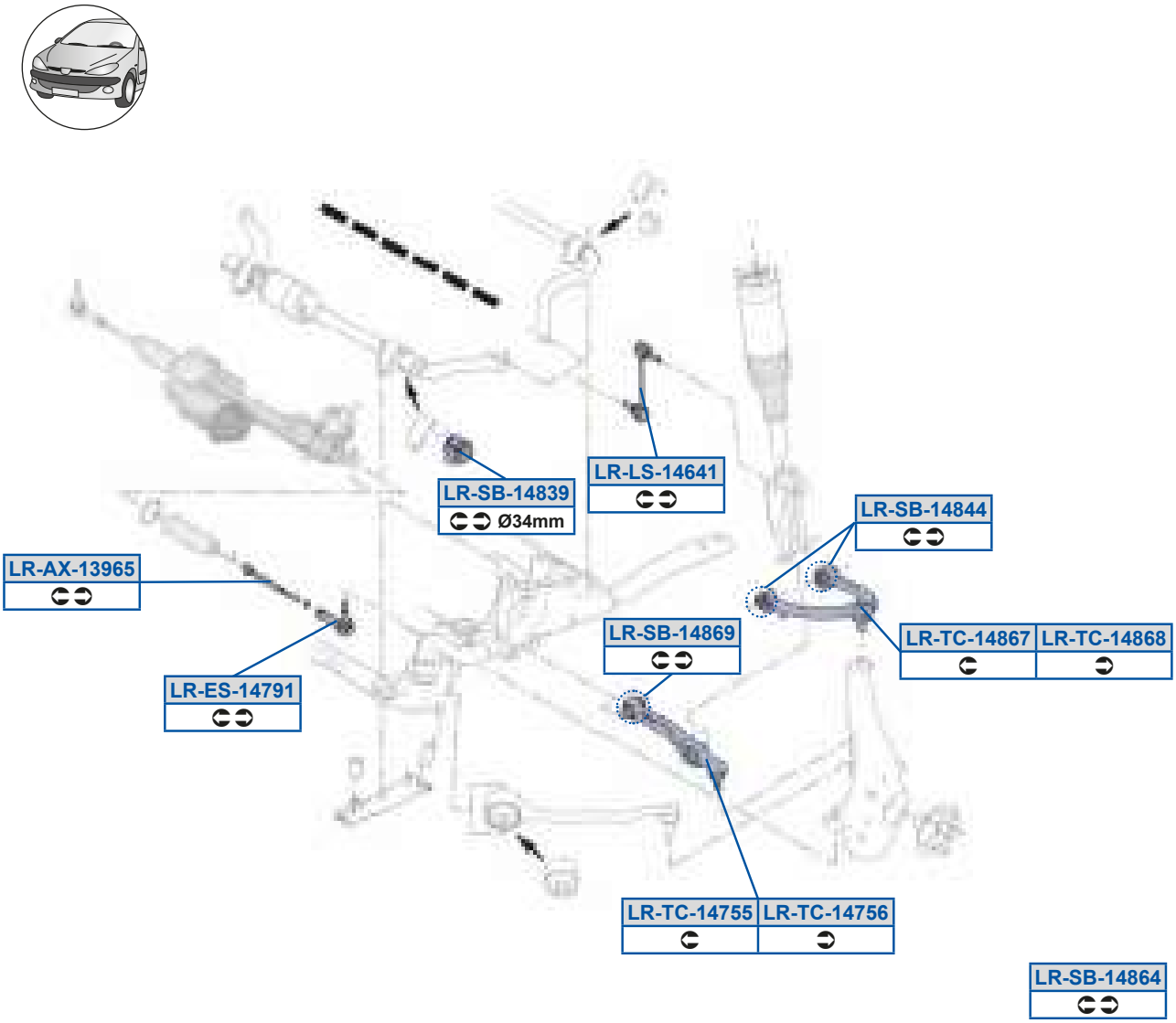

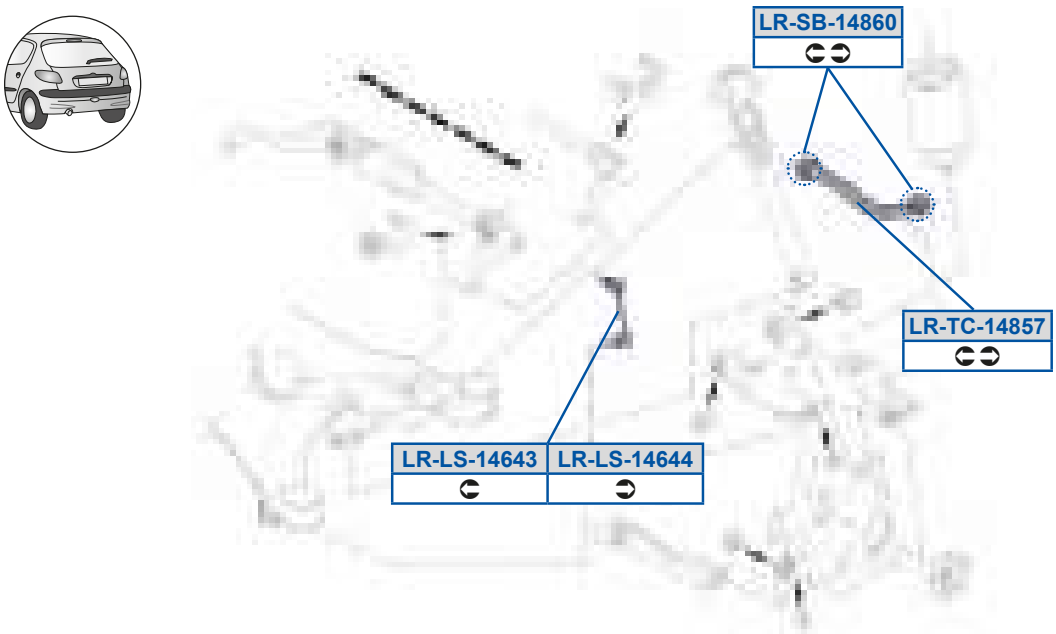

MOOG

Zc 5Oi 59AGDC
Zn7AAC9G

Zc 5Sd59BEG9
Zn7AACAB

Zc 5Zd59BDB9
Zn7ACBFG

Zc 5Zd59BDBA
Zn7B9GED

Zc 5Zd59BDBB
Zn7B9GEC

Zc 5dP59BFAG
n uC777873n uC77788

Zc 5dP59BFBB
Zn7AB988 /40Zn7AB989 /40

Zc 5dP59BFD8
Zn7AEDG7 /40

Zc 5dP59BFDB
Zn7BBFB8 /40Zn7BBFBB /40

Zc 5dP59BFDG
Zn7BC9B9 /40Zn7BC9BA /40

Zc 5eQ59BECC
Zn7BC9BA

Zc 5eQ59BECD
Zn7BC9B9

Zc 5eQ59BFCE
Zn7AEDG7

Zc 5eQ59BFDE
Zn7BBFBB

Zc 5eQ59BFDF
Zn7BBFB8

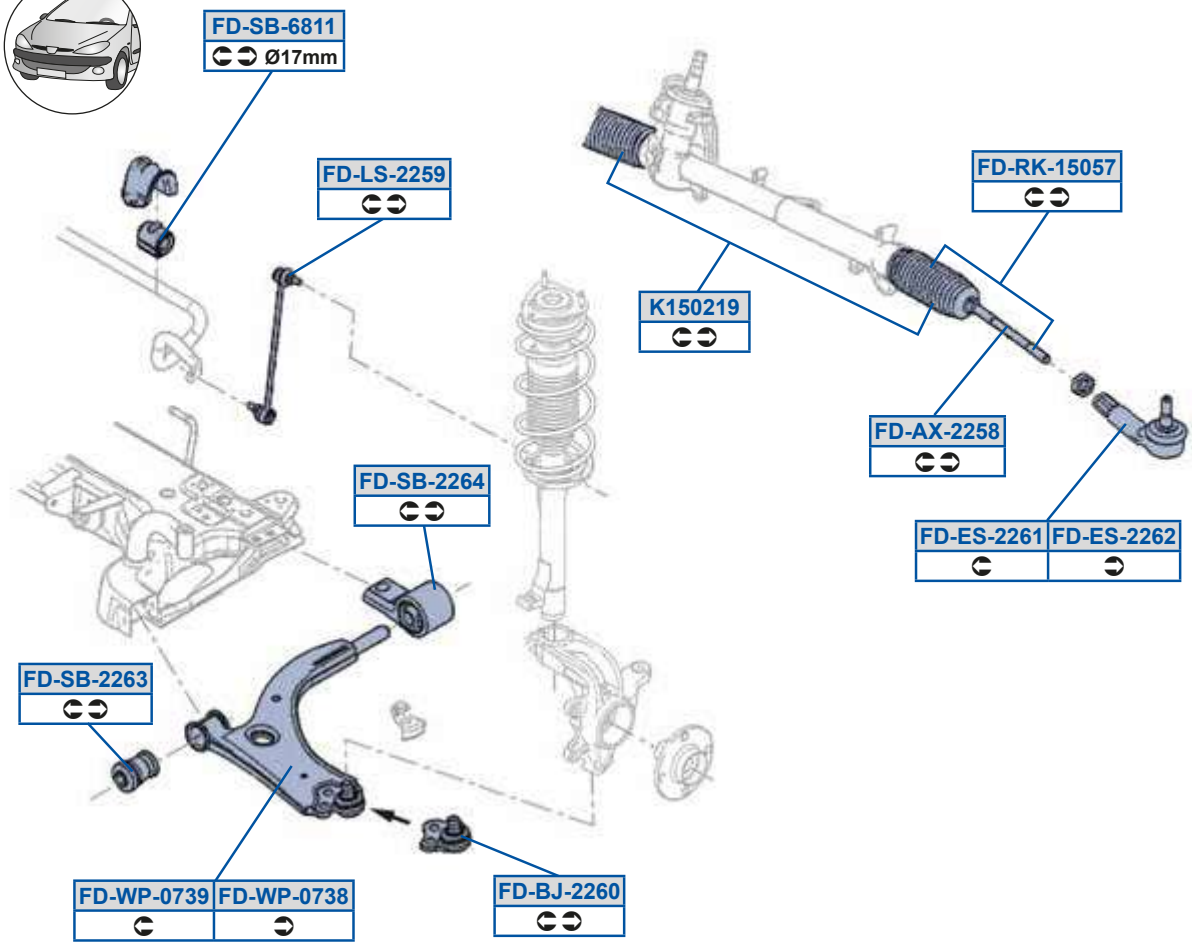
FD-SB-6811
Ø17mm
FD-LS-2259
FD-RK-15057
K150219
FD-AX-2258
FD-SB-2264
FD-ES-2261
FD-ES-2262
FD-SB-2263
FD-WP-0739
FD-WP-0738
FD-BJ-2260

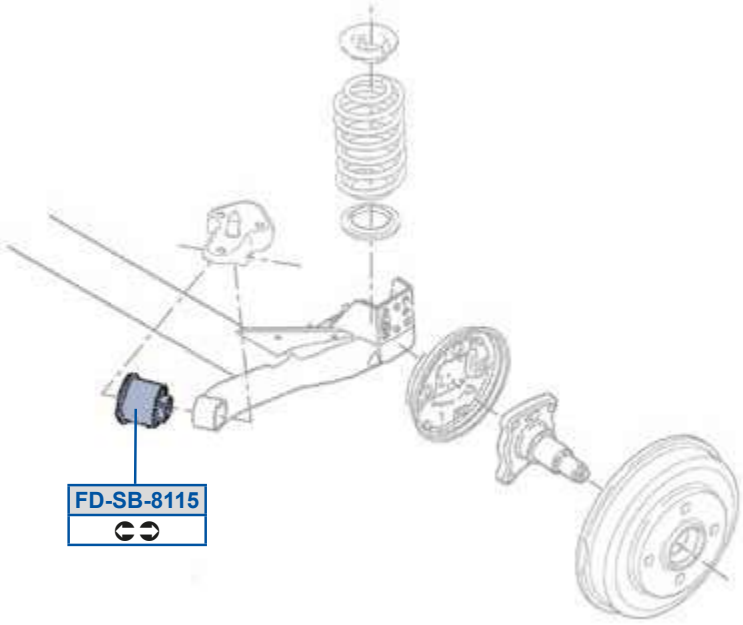
FD-SB-8115

TR5Oi 5>>CF
RSG7A99B7

TR5PX5>>D8

TR5Sd5>>D9
RRA9A99G73RSG7A99G7

TR5Sd5>>D>
RRA9A99F73RSG7A99F7

TR5Zd5>>CG
RRA9AB8E7

TR5cY59C8CE
RSG7A99B7

TR5dP5>>DA
88BD8A7 /40388BD8A8 /40

TR5dP5>>DB
88BD8A7 /40388BD8A8 /40

TR5dP5DF99
RRA9AB8CD

TR5dP5F99C
88BD8D7

TR5ha58EAF
RRA9ABA77

TR5ha58EAG
RRA9ABAC7

Y9C8>9G

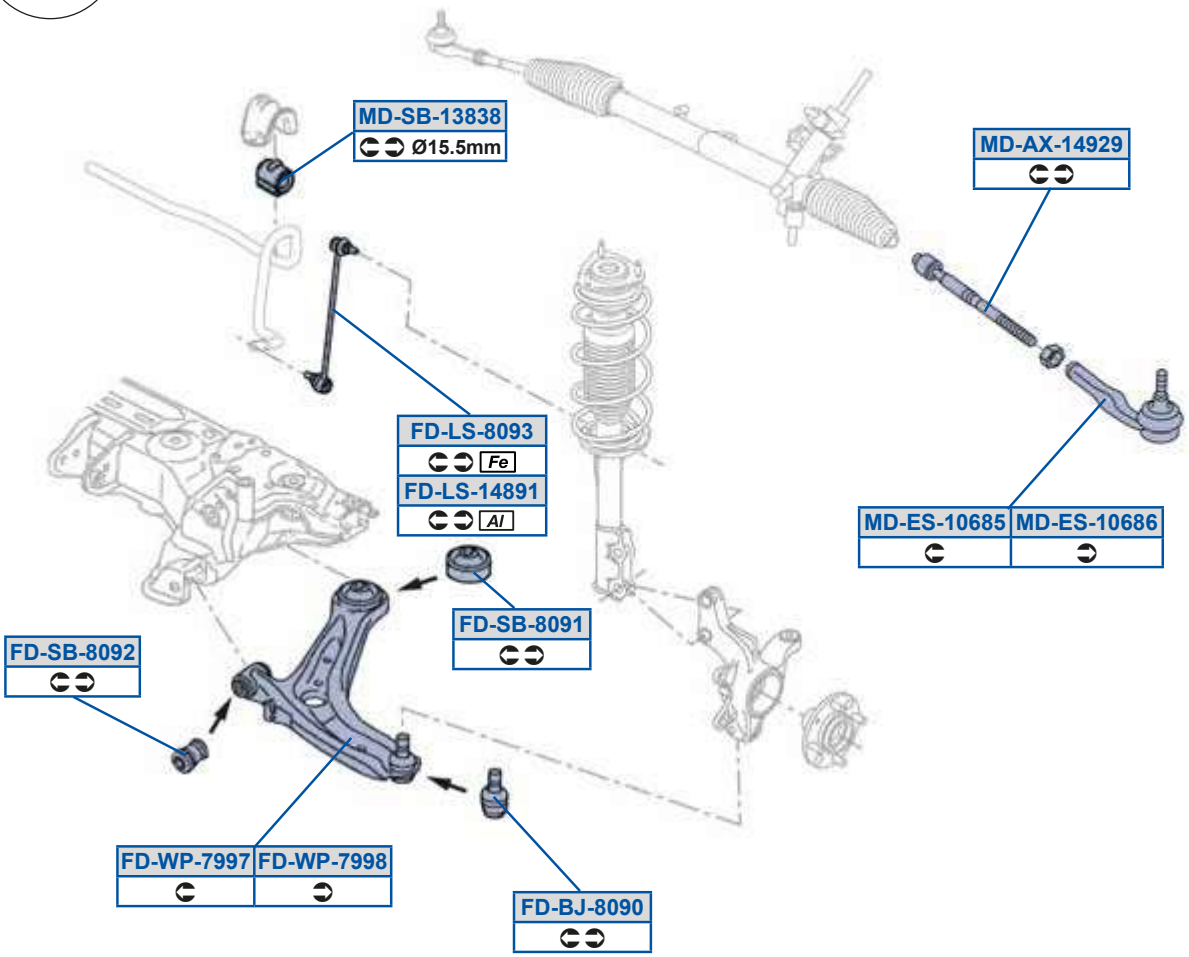
MD-SB-13838
Ø15.5mm
MD-AX-14929
FD-LS-8093
Fe
FD-LS-14891
Al
MD-ES-10685
MD-ES-10686
FD-SB-8091
FD-SB-8092
FD-WP-7997
FD-WP-7998
FD-BJ-8090

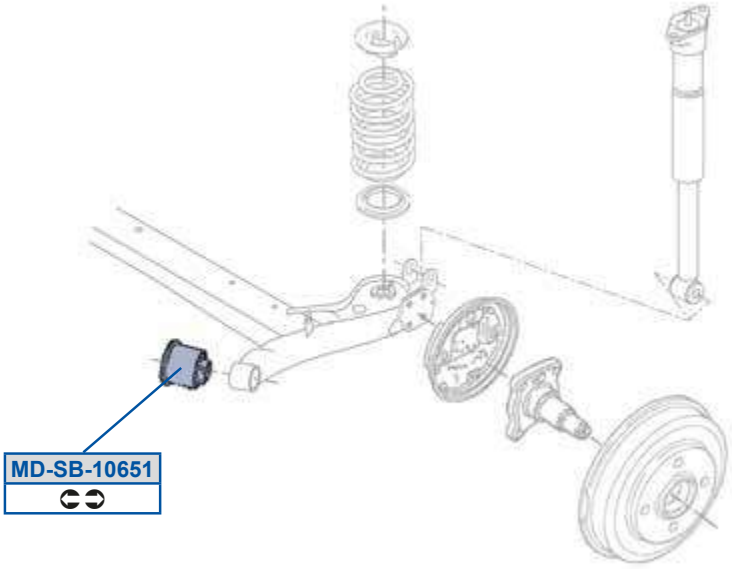
MD-SB-10651

TR5PX5F8G8
8CB7E9B /40 38CB7E9C /40

TR5Zd59BFG9
F C8APBAFOP3F C8APBAFPO

TR5Zd5F8GA
F C8APBAFOP3RDC8AB8E7

TR5dP5F8G9
8CB7E9C /40

TR5dP5F8G>
8CB7E9C /40

TR5h a5EGGE
F C8A7C8PR3RDC8ABAC7

TR5h a5EGGF
F C8A7B9PR3RDC8ABA77

[R5Oi 59BG>G
RDC8A99B73RDCAA99B7

[R5Sd598DFC
RDC8A99G73RDCAA99G7

[R5Sd598DFD
RDC8A99F73RDCAA99F7

[R5dP598DC9
RDC89FBD73RUF79FBD7

[R5dP59AFAF
RDC8AB8CD

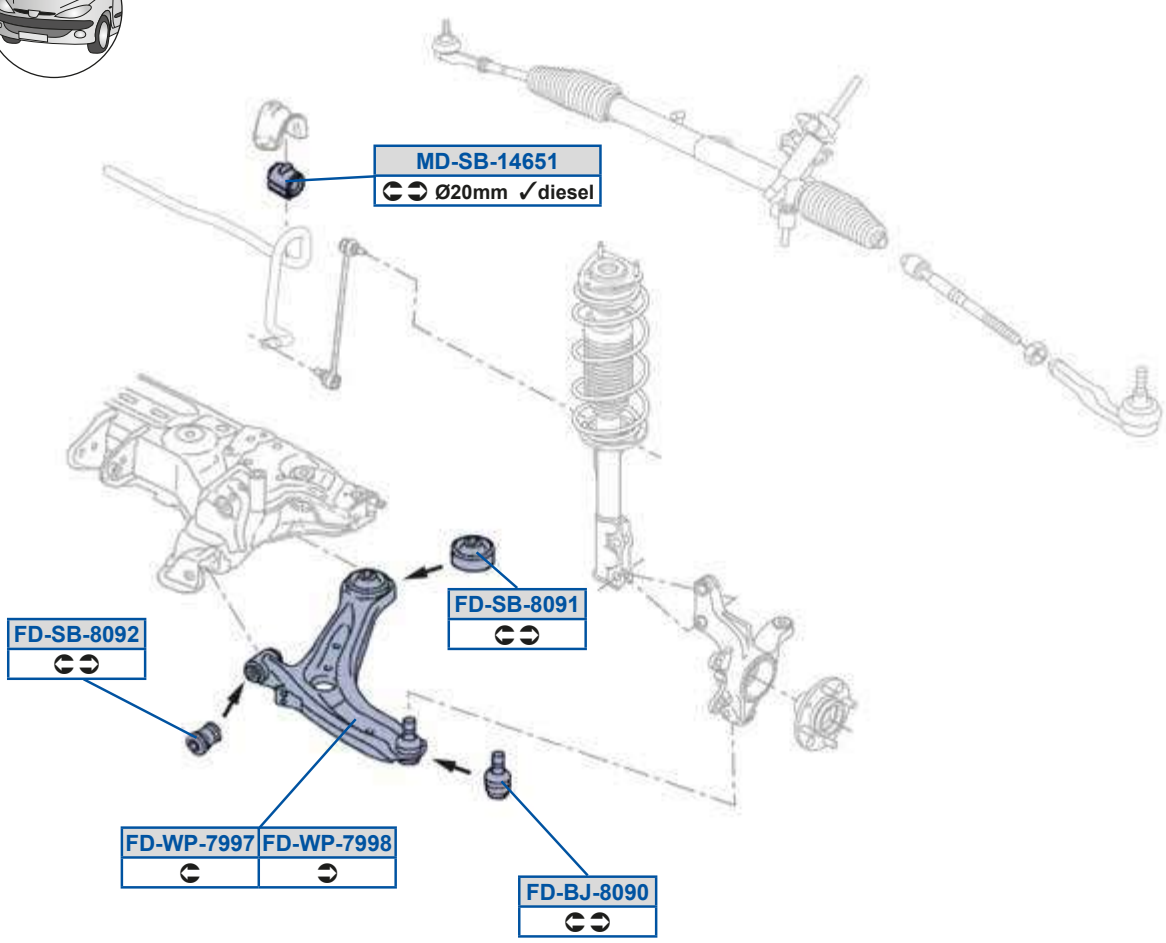
MD-SB-14651
Ø20mm ✓diesel
FD-SB-8091
FD-SB-8092
FD-WP-7997
FD-WP-7998
FD-BJ-8090

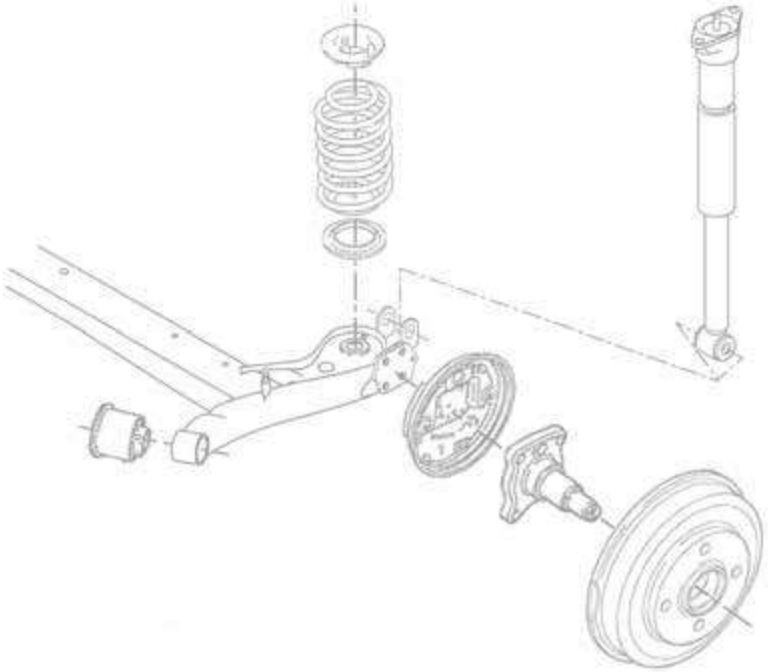

TR5PX5F8G8
8CB7E9B /40 38CB7E9C /40

TR5dP5F8G9
8CB7E9C /40

TR5dP5F8G>
8CB7E9C /40

TR5h a5EGGE
F C8A7C8PR3RDC8ABAC7

TR5h a5EGGF
F C8A7B9PR3RDC8ABA77

[R5dP59BDC9
YRD84AB48CDP3YRD84AB48CDQ

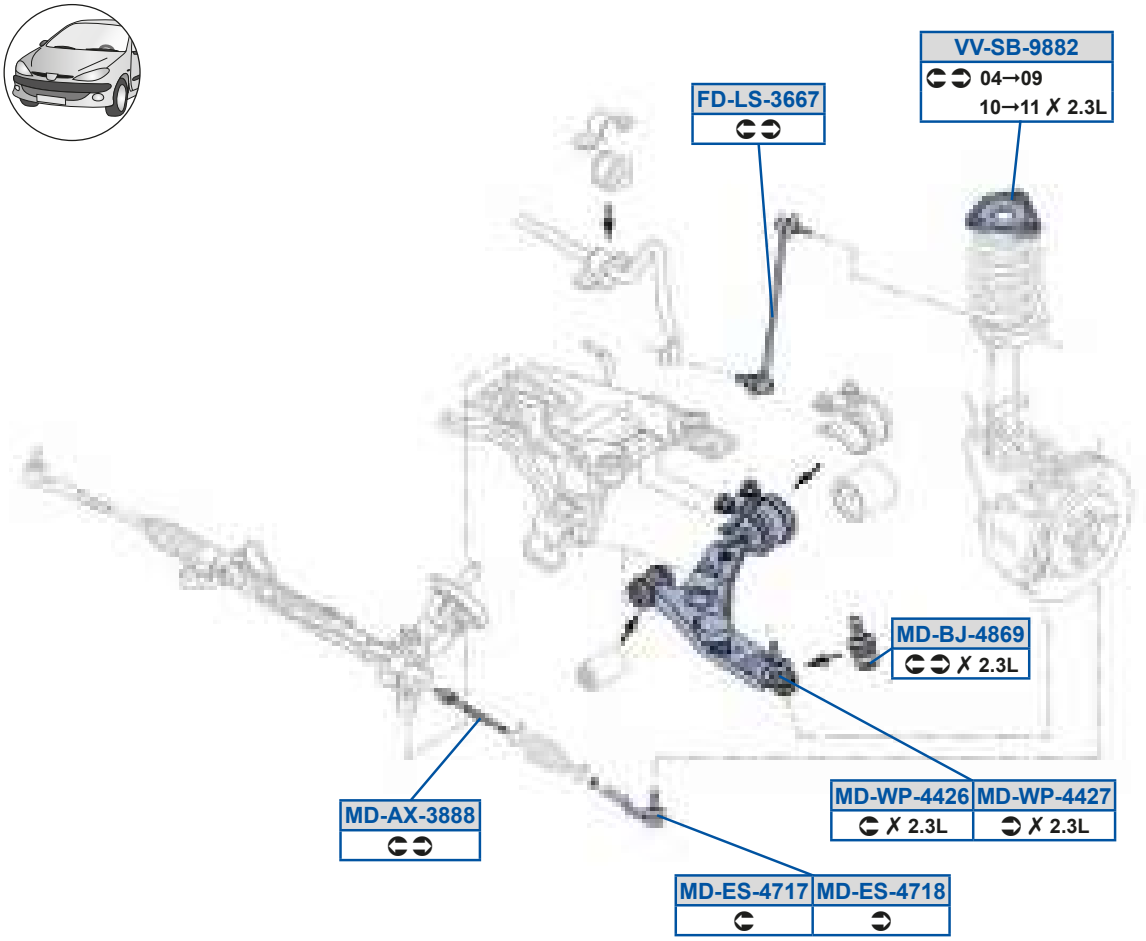
VV-SB-9882
04→09
10→11 ✗ 2.3L
FD-LS-3667
MD-BJ-4869
✗ 2.3L
MD-WP-4426
✗ 2.3L
MD-WP-4427
✗ 2.3L
MD-AX-3888
MD-ES-4717
MD-ES-4718

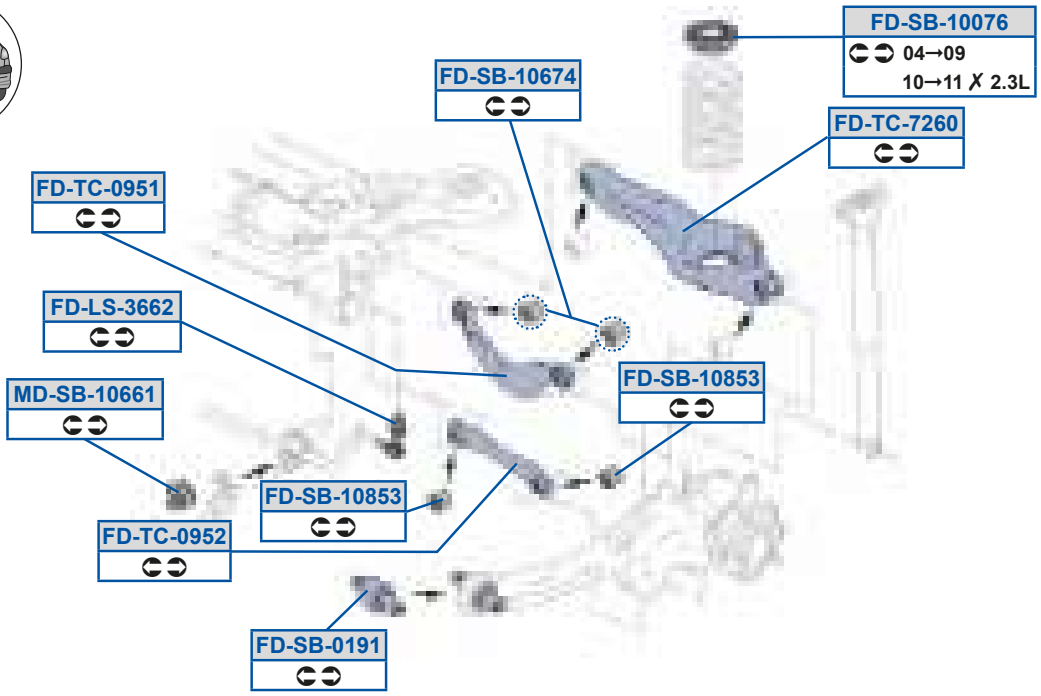
FD-SB-10076
04→09
10→11 ✗ 2.3L
FD-SB-10674
FD-TC-7260
FD-TC-0951
FD-LS-3662
FD-SB-10853
MD-SB-10661
FD-SB-10853
FD-TC-0952
FD-SB-0191

MOOG

TR5Zd5ADD>
Pi BY9F8E7Q3Pi BY9F8E7R

TR5Zd5ADDE
Pi BYAB8E7P3Pi BYAB8E7Q

TR5dP589G9

TR5dP5988ED
PAET9FG87P3PAET9FG87Q

TR5dP598DEB
87D8DCG /4C38A9GEA7 /40

TR5dP598FCA
87D8DDF /40

TR5eQ58GC9
PPa 99FQ873Pi BY9FQ87P

TR5eQ58GC>
Pi BY9FC77Q3Q9AD9FC77O

TR5eQ5E>D8

[R5Oi 5AFFF
Pi BZA99B7

[R5PX5BFDG
C88EB /4C3C88EC /40

[R5Sd5BE9E
Pi BZA99G7

[R5Sd5BE9F
Pi BZA99F7

[R5Zd59BGFC
PAETAB8E73Pi BYAB8E7

[R5dP598DD9
Pi BY9F8CDS

[R5h a5BB>D
PA9VABAC73PA9VABAC7O

[R5h a5BB>E
PA9VABA773PA9VABA77O

gg5dP5GFF>
PPa 9ABAF 3Pa a 9ABAF7

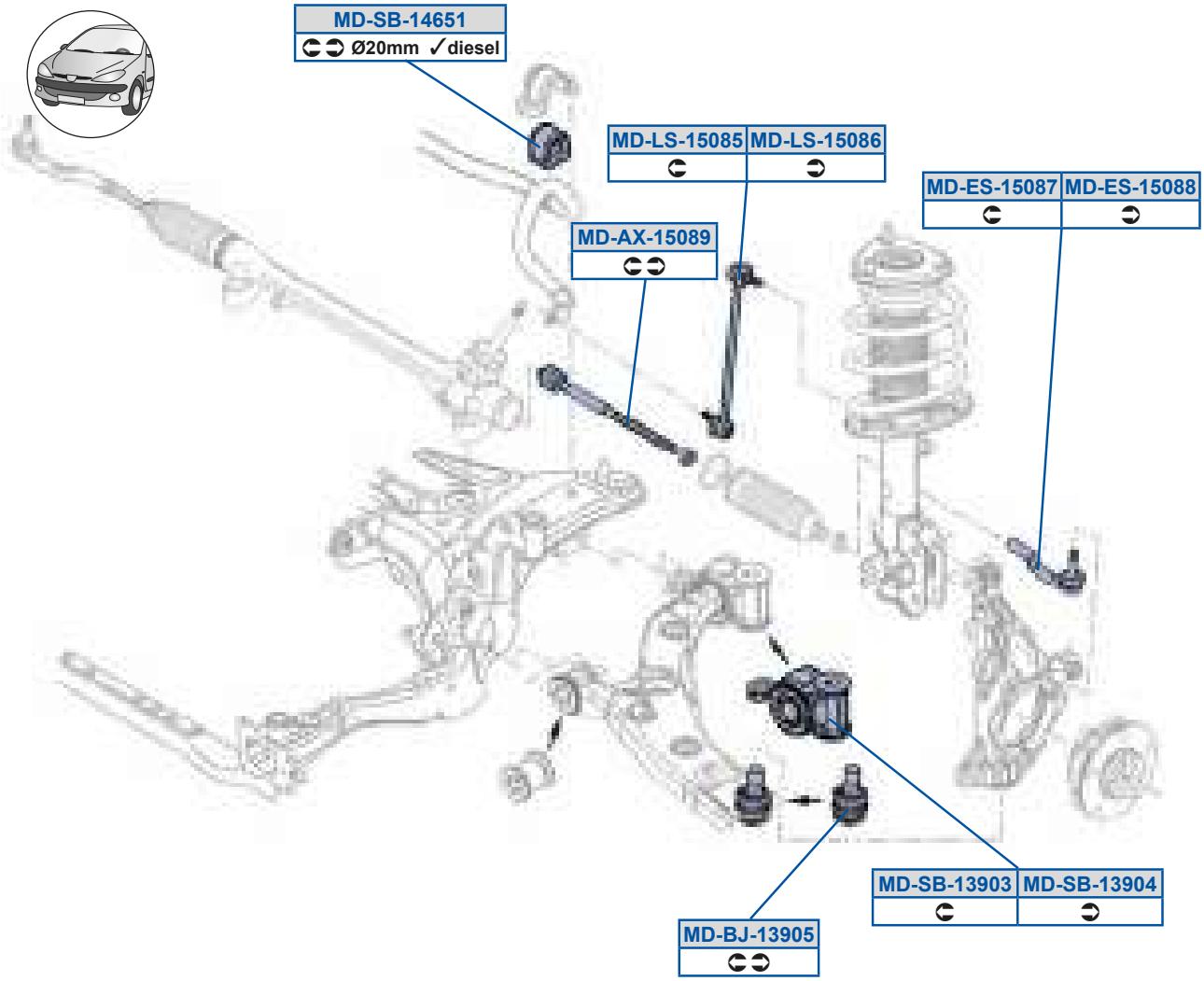
MD-SB-14651
Ø20mm ✓diesel
MD-LS-15085
MD-LS-15086
MD-ES-15087
MD-ES-15088
MD-AX-15089
MD-SB-13903
MD-SB-13904
MD-BJ-13905

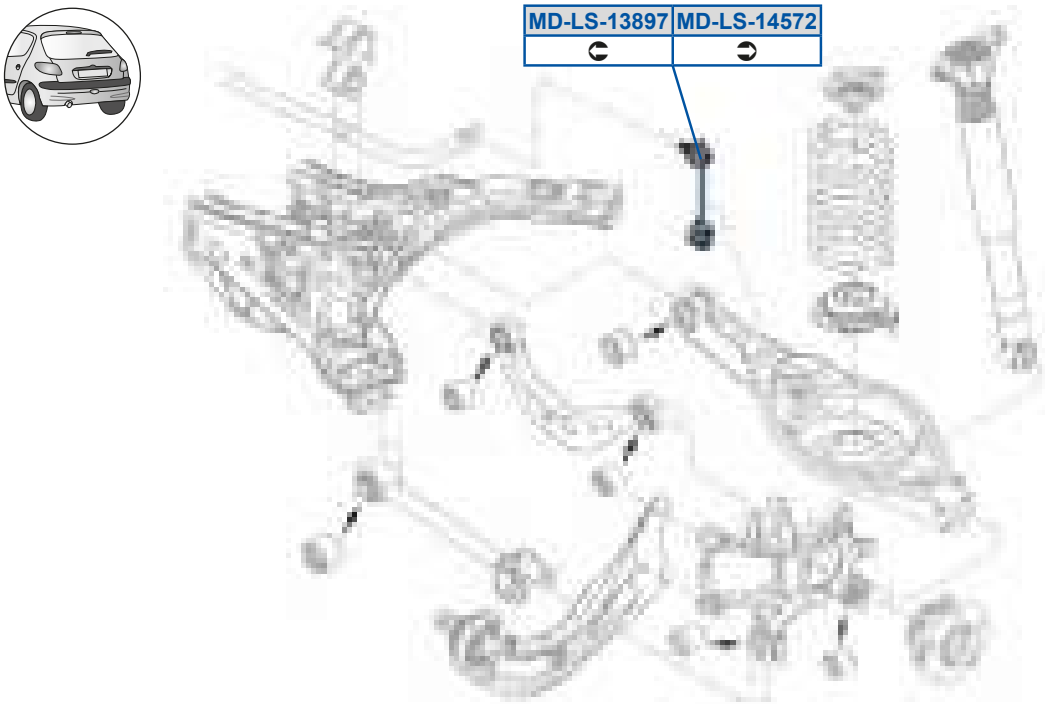
MD-LS-13897
MD-LS-14572

[R5Oi 59C8FG
UVt 9A99B73UVt 9A99B7O

[R5dP59AG8A
YRACABA77R /40

[R5PX59AG8C
YRACABA77R /40

[R5dP59AG8B
YRACABA77R /40

[R5Sd59C8FE
UVt 9A99G73UXnGA99G7

[R5dP59BDC9
YRD84AB48CDP3YRD84AB48CDQ

[R5Sd59C8FF
UVt 9A99F73UXnGA99G7

[R5Zd59AFGE
YRA89F8G7

[R5Zd59BCE>
YRA89F8E7

[R5Zd59C8FC
PBC0AB8E7

[R5Zd59C8FD
PBC0AB8C7

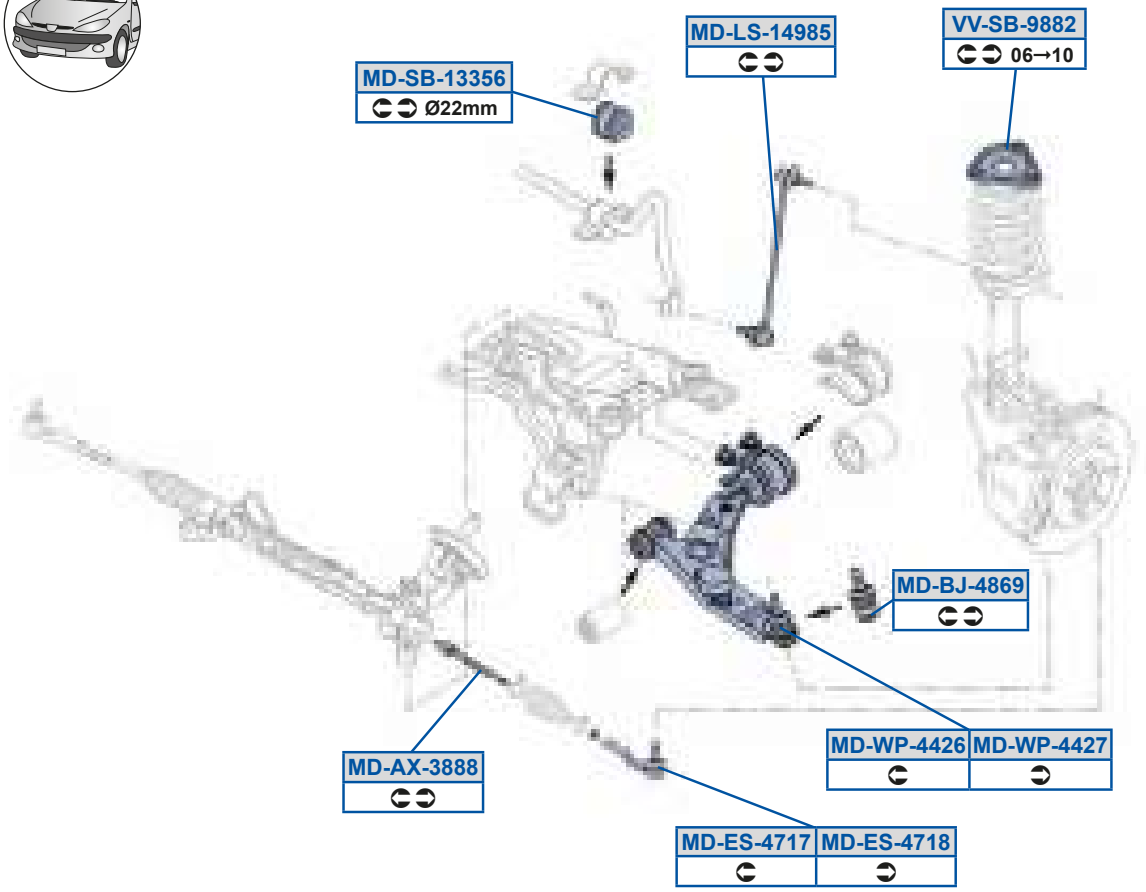
MD-SB-13356
Ø22mm
MD-LS-14985
VV-SB-9882
06→10
MD-BJ-4869
MD-WP-4426
MD-WP-4427
MD-AX-3888
MD-ES-4717
MD-ES-4718

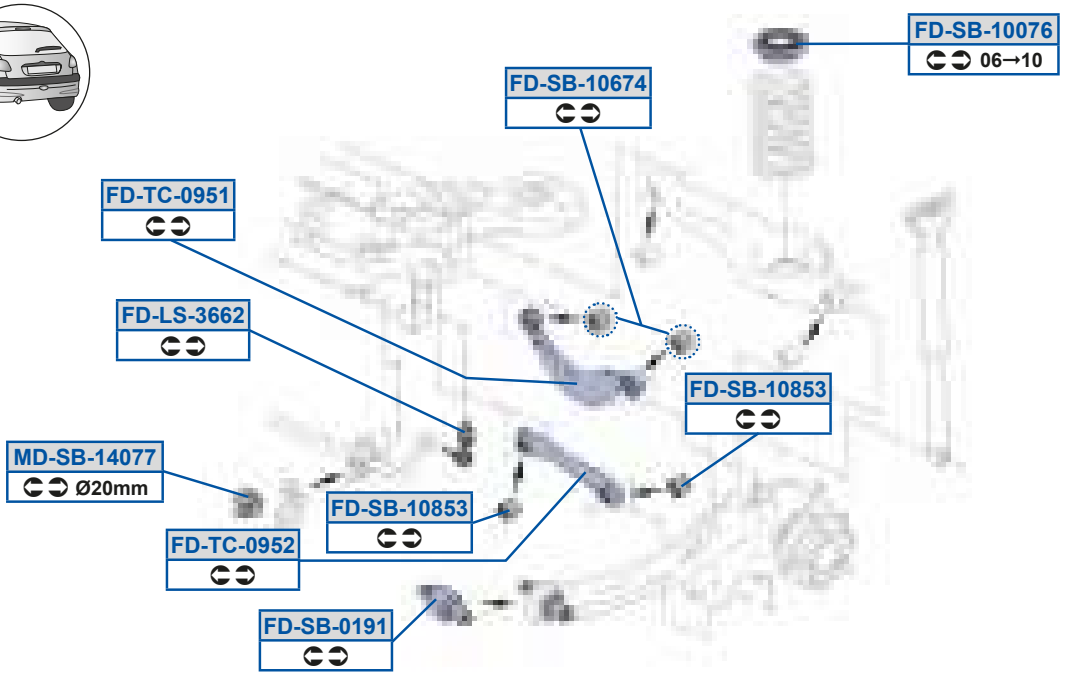
FD-SB-10076
06→10
FD-SB-10674
FD-TC-0951
FD-LS-3662
FD-SB-10853
MD-SB-14077
Ø20mm
FD-SB-10853
FD-TC-0952
FD-SB-0191

TR5Zd5ADD>
Pi BY9F8E7Q3Pi BY9F8E7R

TR5dP589G9

TR5dP5988ED
PAET9FG87P3PAET9FG87Q

TR5dP598DEB
87D8DCG /4038A9GEA7 /40

TR5dP598FCA
87D8DDF /40

TR5eQ58GC9
PPa 99FQ873Pi BY9FQ87P

TR5eQ58GC>
Pi BY9FC77Q3Q9AD9FC77O

[R5Oi 5AFFF
Pi BZA99B7

[R5PX5BFDG
C88EB /403C88EC /40

[R5Sd5BE9E
Pi BZA99G7

[R5Sd5BE9F
Pi BZA99F7

[R5Zd59BGFC
PAETAB8E73Pi BYAB8E7

[R5dP59AACD
QQ9GAB8CD3QQ9GAB8CDO

[R5dP59B8EE
Q9BA9F8CDP3Q9BA9F8CDQ

[R5h a5BB>D
PA9VABAC73PA9VABAC7O

[R5h a5BB>E
PA9VABA773PA9VABA77O

gg5dP5GFF>
PPa 9ABAF 3Pa a 9ABAF7

CIQc9Gn

[OkRO

DVt vÉutv ŒJU1	8F78; 9; 78F	D dt ŒJU1	8D78; 9; 78F
Ddt é ht' ŒJk1	8F78; 9; 78E		

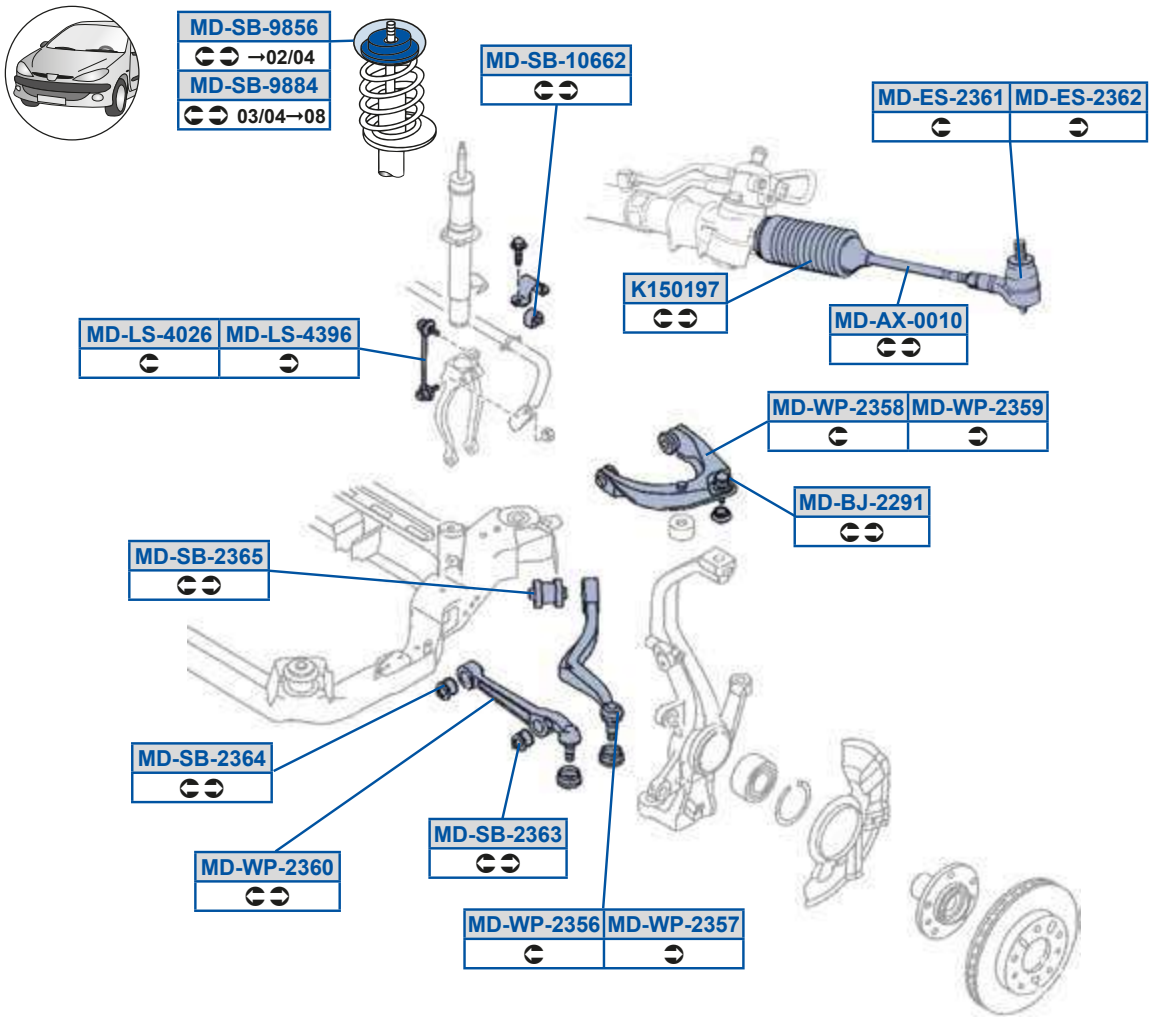

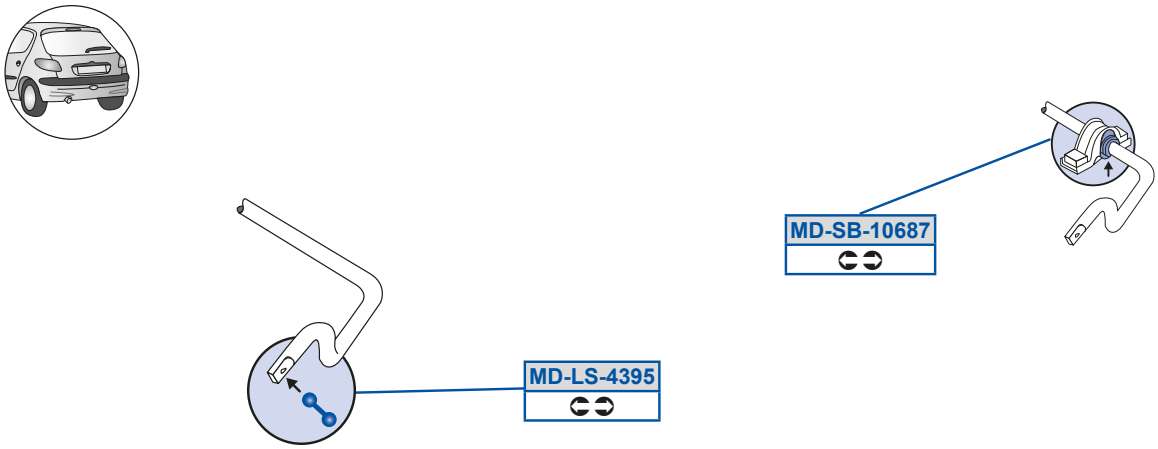

MOOG

Y9C89GE
UXD0A989 3oBEi A989C

[R5dP598DD>
UXD0AB8CD

[R5h a5>ACE
UXD0ABX77P3UXD0ABX77Q

[R5Oi 58898
UXDSA99B73UXDSA99B

[R5dP598DFE
UXD09F8CD

[R5h a5>ACF
UXD0AB9C7P3Ui G0AB9C70

[R5PX5>>G9
UXD0ABCB7

[R5dP5>ADA
UXD0ABE870

[R5h a5>ACG
UXD0AB977P3Ui G0AB9770

[R5Sd5>AD9
U9D0A99G73UXDSA99G7

[R5dP5>ADB
UXD0ABBE703UXD0ABBE7P

[R5h a5>AD8
U0D0ABA77P3UXD0ABA77P

[R5Sd5>AD>
U9D0A99F73UXDSA99F7

[R5dP5>ADC
UXD0ABBD703UXD0ABBD7P

[R5Zd5B8>D
UXD0AB8E703UY90AB8E7

[R5dP5GFCD
UXD0ABAF7Q3UY90ABAF70

[R5Zd5BAGC
UXD09F8E703UXD09F8E7P

[R5dP5GFFB
DSC 8F8FAP3FSC 8F8FA0

[R5Zd5BAGD
UXD0AB8C703UY90AB8C70

[R5h a5>ACD
UXD0ABXC7P3UXD0ABXC7Q

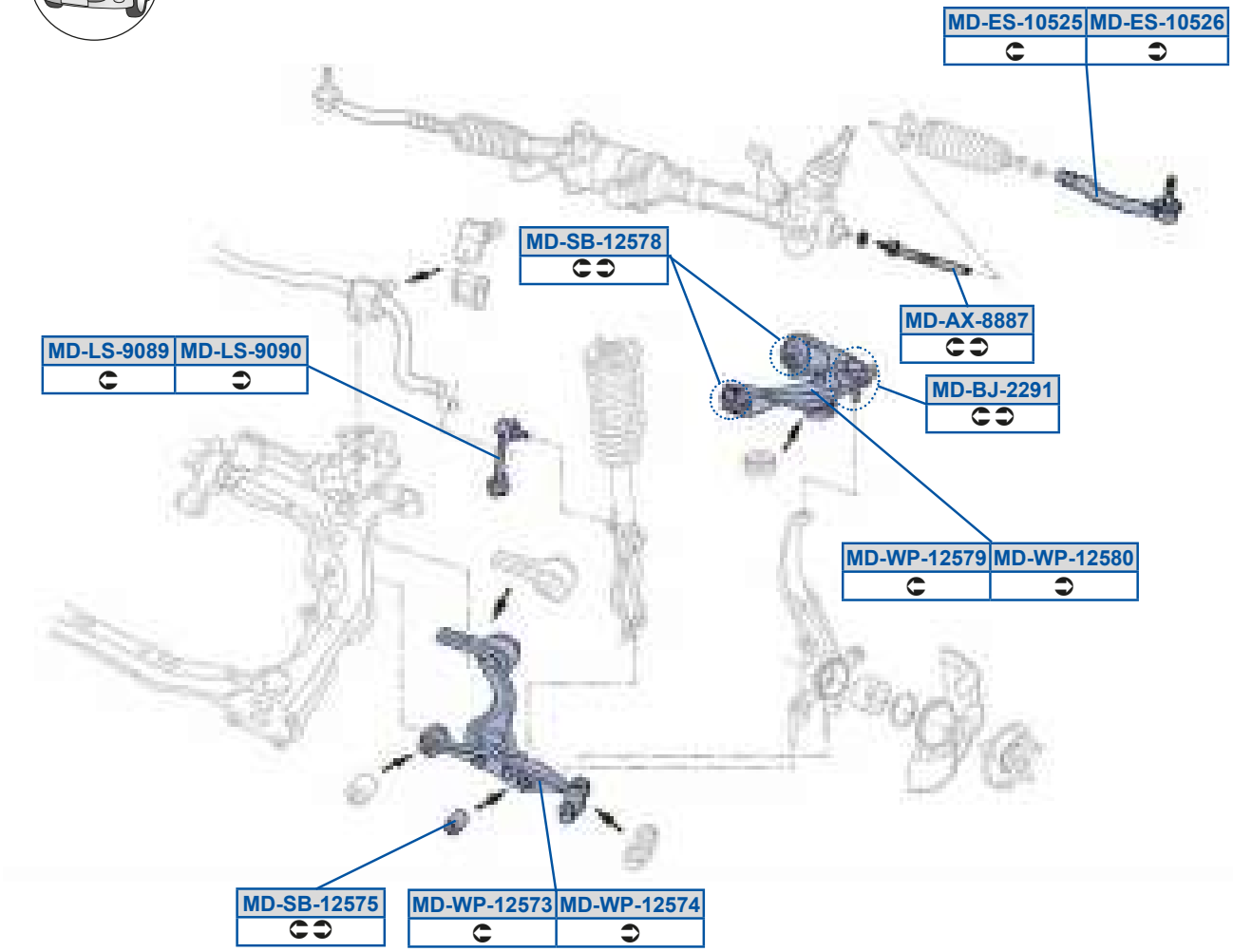
MD-ES-10525
MD-ES-10526
MD-SB-12578
MD-AX-8887
MD-LS-9089
MD-LS-9090
MD-BJ-2291
MD-WP-12579
MD-WP-12580
MD-SB-12575
MD-WP-12573
MD-WP-12574

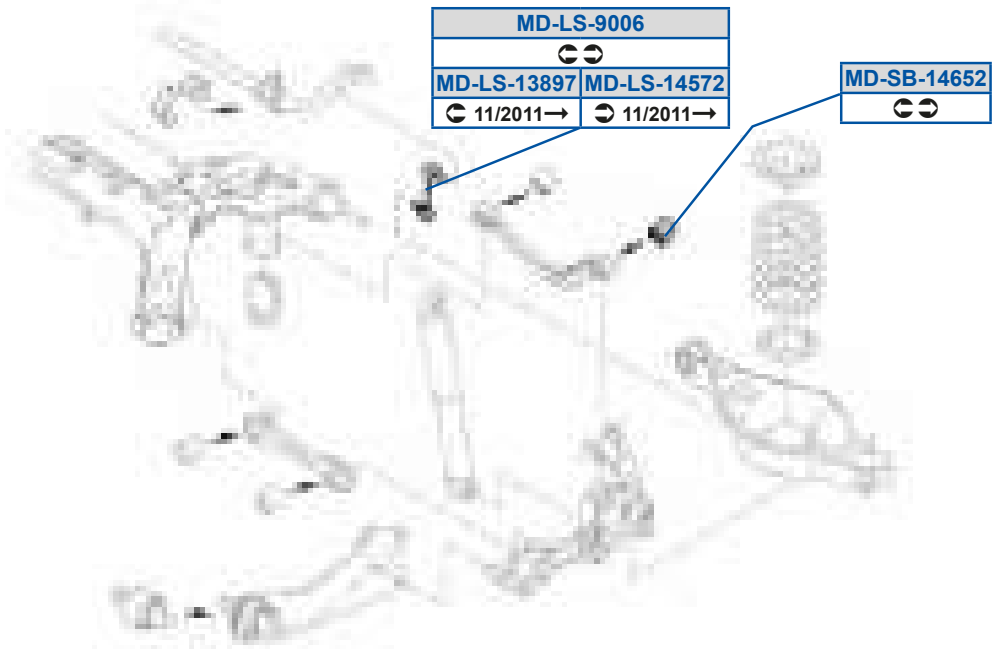
MD-LS-9006
MD-LS-13897
11/2011→
MD-LS-14572
11/2011→
MD-SB-14652

[R5Oi 5FFFE
Uo8RA99B7

[R5Zd5G8G8
Uo8RAB8C7

[R5PX5>>G9
UXDOABCB7

[R5dP59>CEC
Uo8RABA77Z /40

[R5Sd598C>C
Uo8RA99G7

[R5dP59>CEF
Uo8RAB9770 /40

[R5Sd598C>D
Uo8RA99F7

[R5dP59BDC>
YRAC9FBC7

[R5Zd59AFGE
YRA89F8G7

[R5h a59>CEA
Uo8RABAC7U3Uo8RABAC7V

[R5Zd59BCE>
YRA89F8E7

[R5h a59>CEB
Uo8RABA77U3Uo8RABA77V

[R5Zd5G88D
Uo8R9F8E7

[R5h a59>CEG
Uo8RAB9C703Uo8RAB9C7Q

[R5Zd5G8FG
Uo8RAB8E7

[R5h a59>CF8
Uo8RAB9770

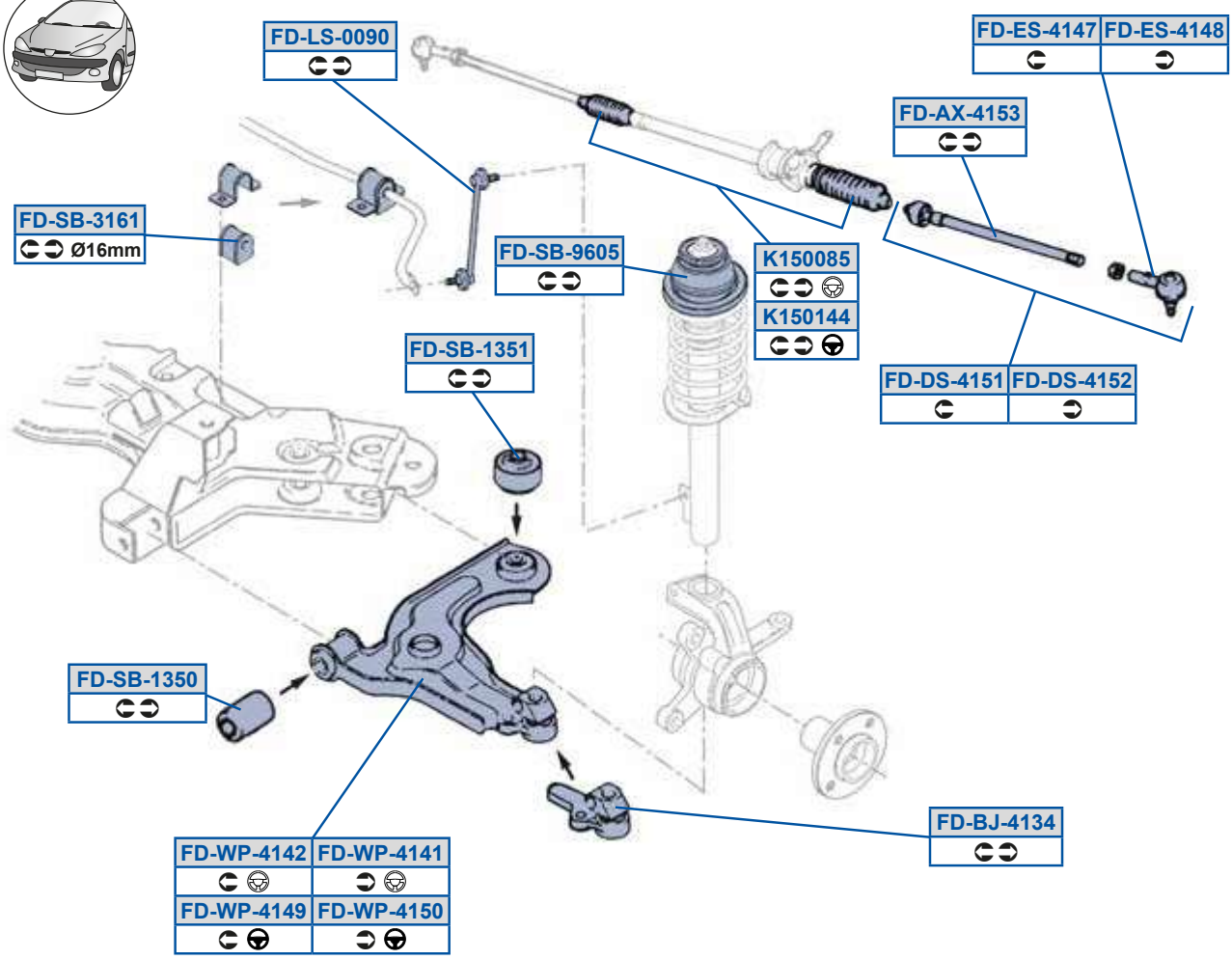
FD-LS-0090
FD-ES-4147
FD-ES-4148
FD-AX-4153
FD-SB-3161
Ø16mm
FD-SB-9605
K150085
K150144
FD-SB-1351
FD-DS-4151
FD-DS-4152
FD-SB-1350
FD-BJ-4134
FD-WP-4142
FD-WP-4141
FD-WP-4149
FD-WP-4150

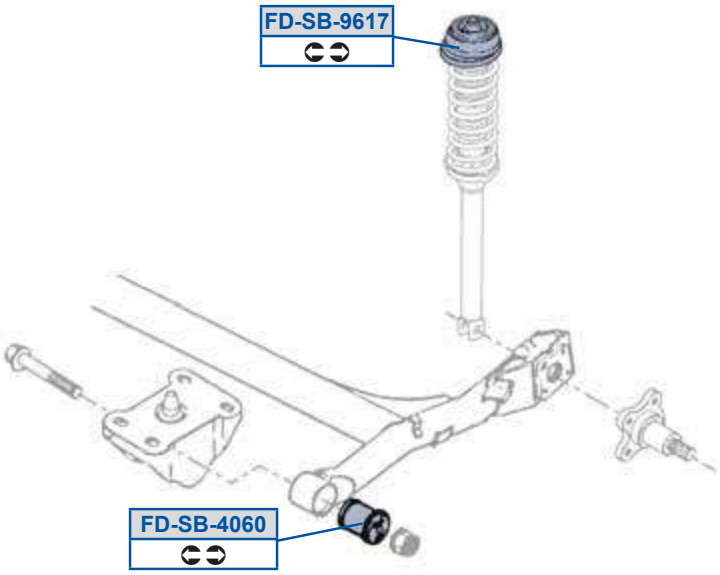
FD-SB-9617
FD-SB-4060

TR5Oi 5B9CA
8S77A99B73GDTPA9FGOQ

TR5dP59AC9
87DA99D387DA9BF

TR5h a5B9C8
878C9DB387E8DGB

TR5PX5B9AB
8Se7ABCC7O

TR5dP5A9D9
8S77AB8CD

Y9C88FC
8S77A989C

TR5Rd5B9C9
8788FCF3878BB78B

TR5dP5B8D8
878DBAG3GDTPCYDCAQO

Y9C89BB
8789F8B38S78A989C

TR5Rd5B9C>
8788FCE

TR5dP5GD8C
8S77ABAG7

TR5Sd5B9BE
8S78A99F7O38Se8AC9F7O

TR5dP5GD9E
8S779F789O

TR5Sd5B9BF
8S77A99F7O38Se7A99F7O

TR5h a5B9B9
8S77ABA77O38S77ABA77P

TR5Zd588G8
8S77AB8E738S78AB8E7

TR5h a5B9B>
8S77ABAC7O38S77ABAC7P

TR5dP59AC8
87877AE38S77AB8CAO

TR5h a5B9BG
878C9DB387E99EG

A>A g IPOn

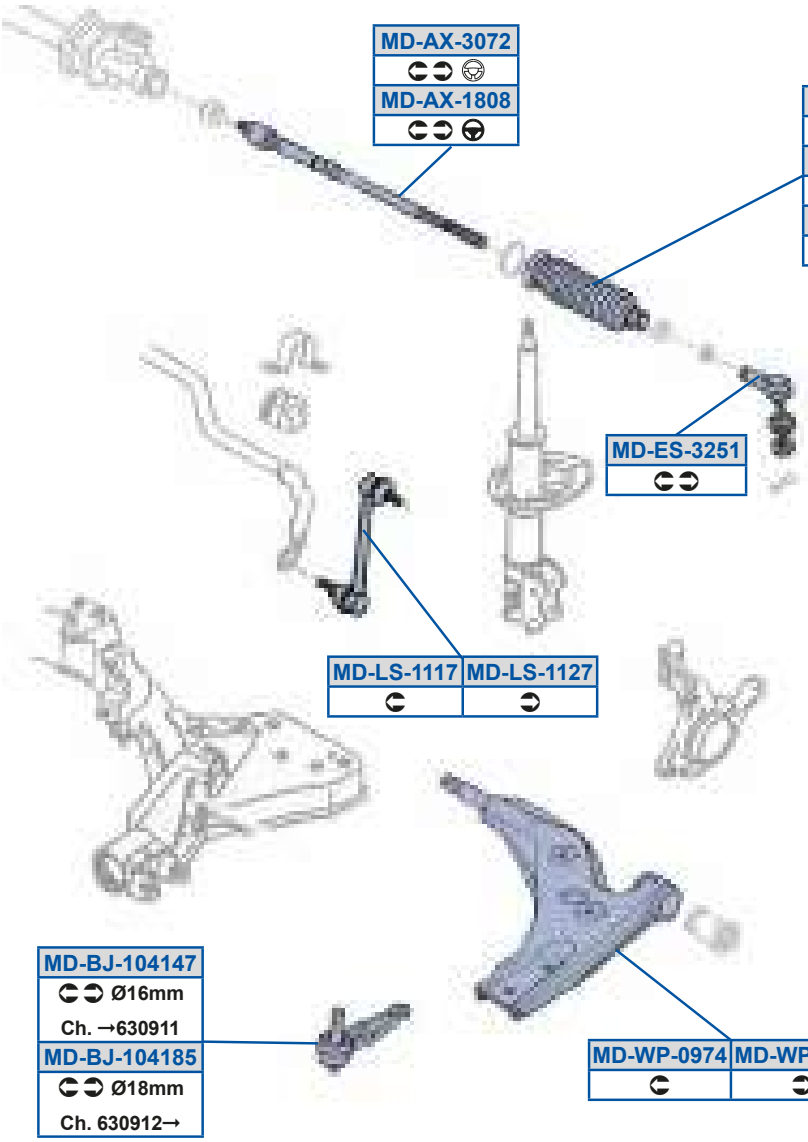

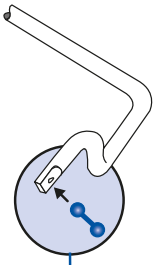

MD-LS-0972

MD-SB-9870 | MD-SB-9874

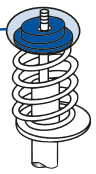

[OkRO

Y9C88C>
PA77A989C3V779A989C

[R5Zd58GE>
PQ8R9F8E73PQ8R9F8E70

Y9C89EF
PBCDA989C3dQ87A989C

[R5Zd5999E
T8C8AB8E73U090AB8E7

Y9C89GB
PX9CA989C3UX9CA989C

[R5Zd599>E
T8C8AB8C73U090AB8C7

[R5Oi 59F8F
P7G9A99B73PTD9A99B7

[R5dP5GFBB
P78QABAF73SFP APBCC0

[R5Oi 5A8E>
PBCCA99B 3T8Q A9F70

[R5dP5GFE8
PQ8R9FAG7P

[R5PX598B9BE
P778ABCC73PBCCABCC7

[R5dP5GFEB
PQ8R9FAF7P

[R5PX598B9FC
P780ABCC73P780ABCC70

[R5h a58GEA
Pe80ABA87

[R5Sd5A>C9
F0P7A99F73F0P9A99F7

[R5h a58GEB
P780ABAC73Pe80ABAC7

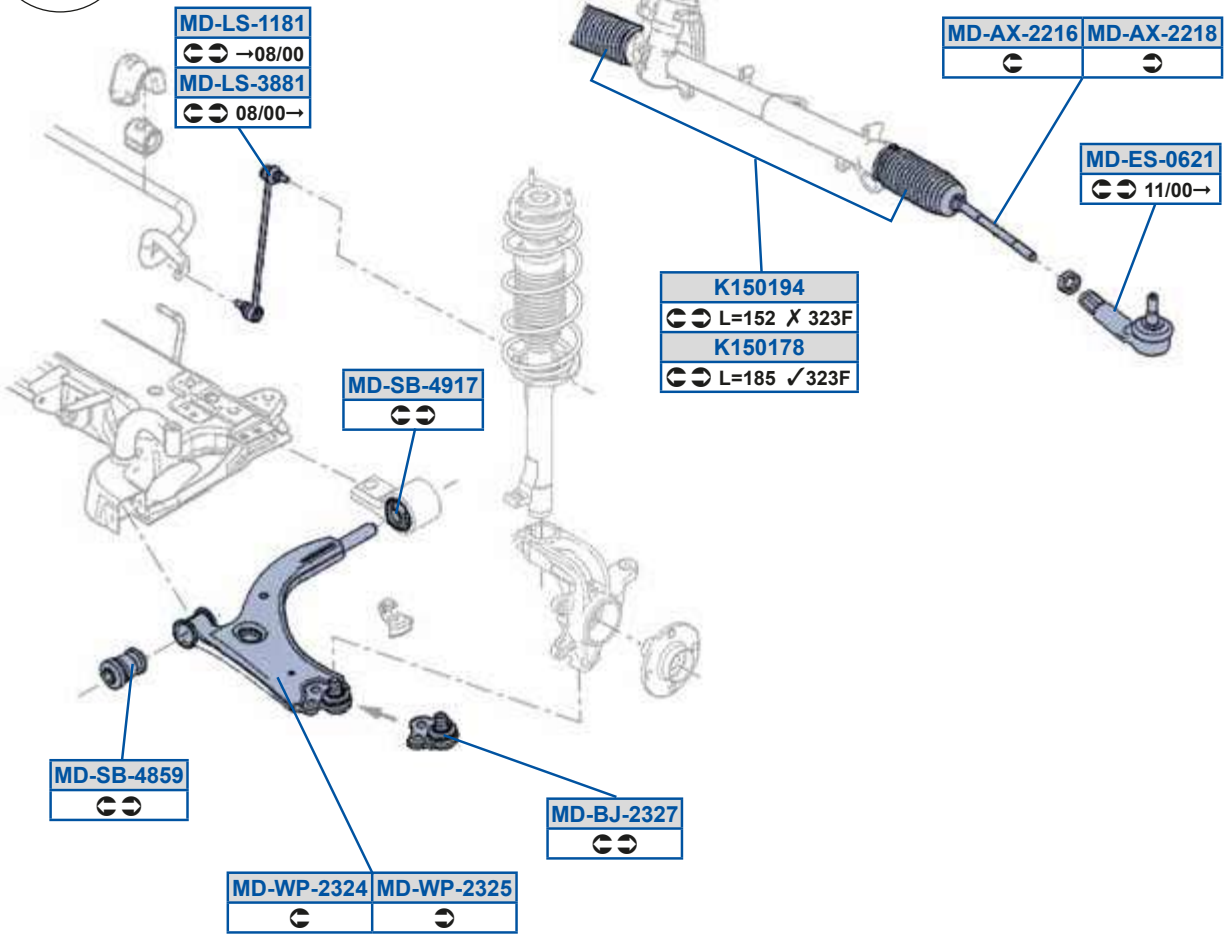

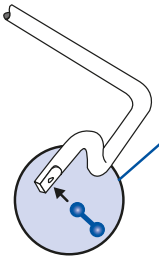

MD-SB-9858	MD-SB-9872
03→03	03→03

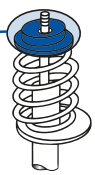

Y9C89EF
PBCDA989C3dQ87A989C

[R5Zd5AD>E
PA7V9F8E7P

Y9C89GB
PX9CA989C3UX9CA989C

[R5Zd5AFF9
ZQD9AB8E73ZQD9AB8E70

[R5Oi 5>>9D
P9CRA99B7

[R5dP5BFCG
P9CRABBE7

[R5Oi 5>>9F
P9CRA99C7

[R5dP5BG9E
P9CRABBD7

[R5PX5>A>E
ZQD9ABCC7

[R5dP5GFCF
P9CR9FAG7P3PXAR9FAG7

[R5Sd58D>9
F0UAA99F73F0UBA99F7

[R5dP5GFE>
P9CR9FAF7P3PXAR9FAF7

[R5Zd599F9
P79DnAB8E73P9DnAB8E7

[R5h a5>A>B
P9CRABAC703P9CRABAC7P

[R5Zd5>DAD
P9Dn9F8E7

[R5h a5>A>C
P9CRABA7703P9CRABA77P

[OkRO

D; D g ŒJT1	8C7GE 9878;	D; D g Vt vÉut v ŒJT1	8C7GE 9878;
D; D g d t é h t' ŒJh 1	897GF 9878;		

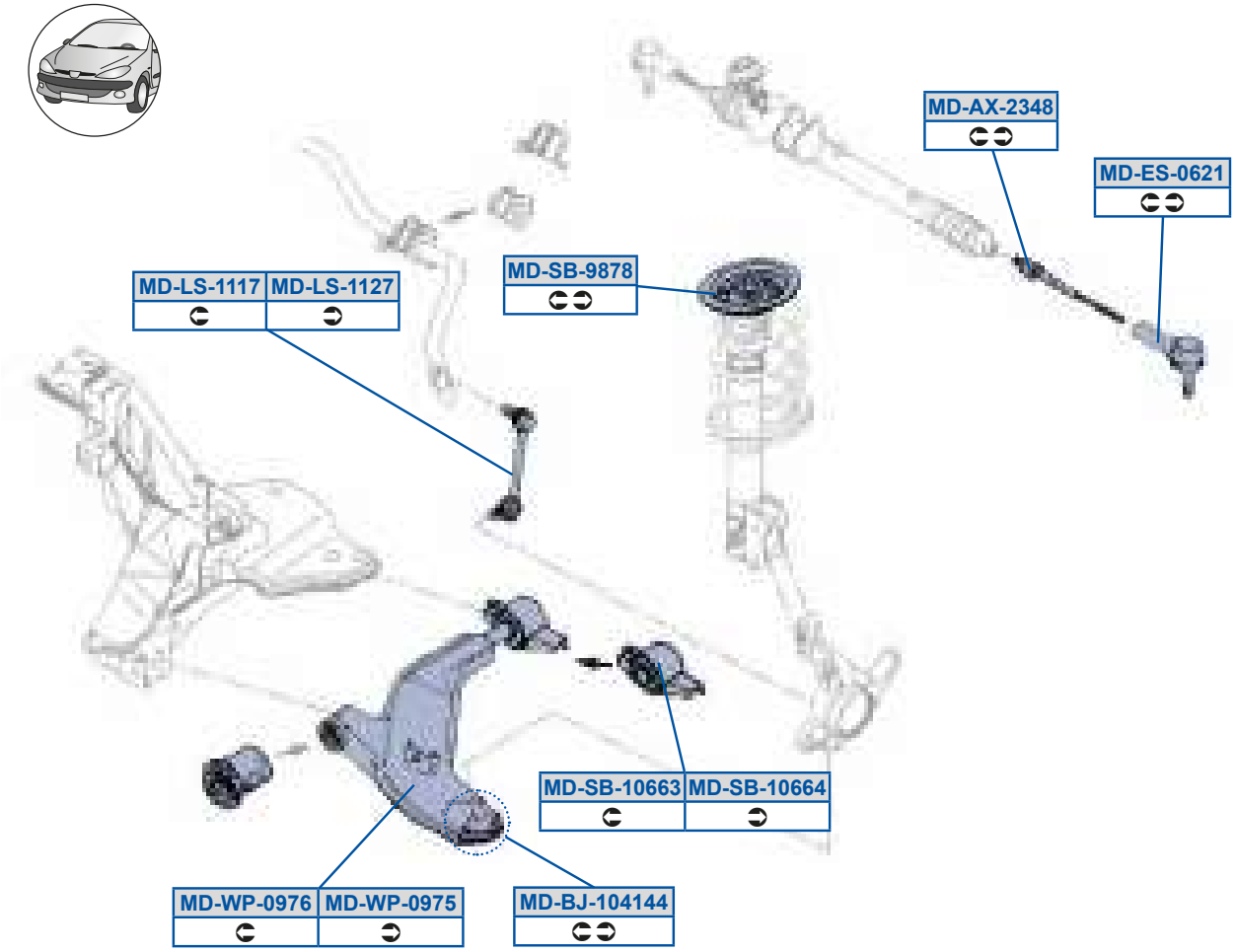

FD-SB-9660	FD-SB-9662
98→99	98→99
MD-SB-9880	MD-SB-9881
00→02	00→02

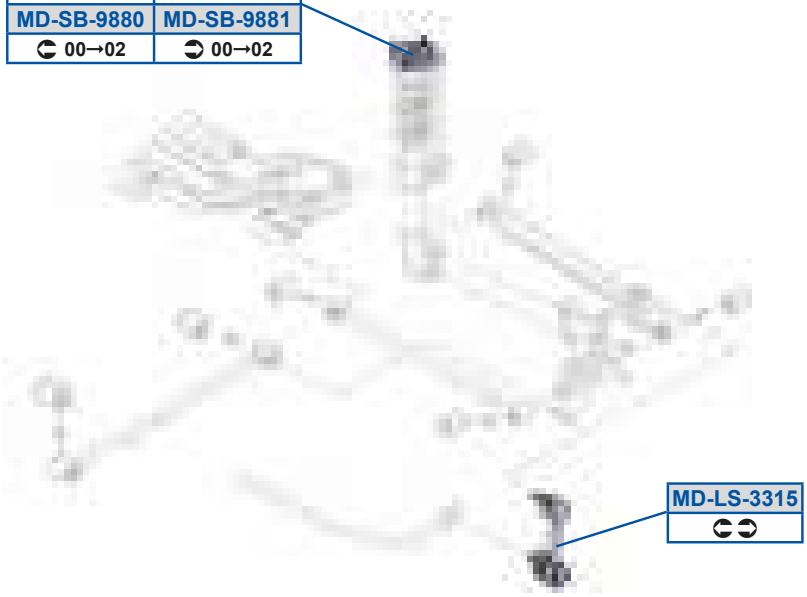

[OkRO

MOOG

TR5dP5GDD8
TA9 8F8G9P3TA9 8F8G9R

TR5dP5GDD>
TA9 8F8G9O3TA9 8F8G9Q

[R5Oi 5>ABF
USBt A99B73USBt A99B7O

[R5PX598B9BB
U7A7GGACD3UODOGGACD

[R5Sd58D>9
FOUAA99F73FOUBA99F7

[R5Zd5999E
T8C8AB8E73UO9OAB8E7

[R5Zd599>E
T8C8AB8C73UO9OAB8C7

[R5Zd5AA9C
USBt 9F8E73USBt 9F8E7P

[R5dP598DDA
USBt ABBD R

[R5dP598DDB
USBt ABBD R

[R5dP5GFEF
UREOABAF73UREOABAF

[R5dP5GFF8
UU9S9FAG7

[R5dP5GFF9
UU9S9FAF7

[R5h a58GEC
Q779ABA77O3USBt ABA77P

[R5h a58GED
Q779ABAC7O3Q779ABAC7P

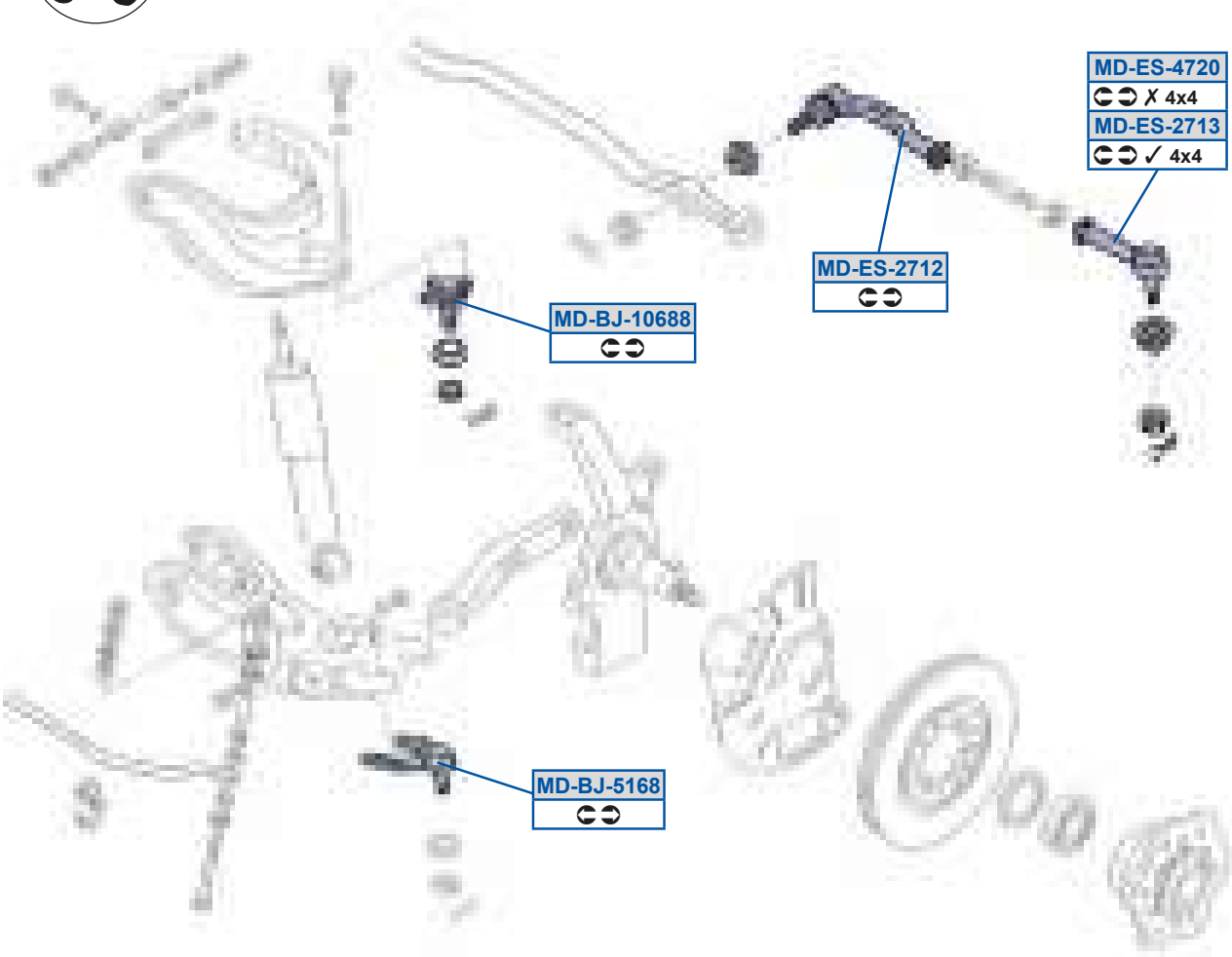
MD-ES-4720
✗ 4x4
MD-ES-2713
✓ 4x4
MD-ES-2712
MD-BJ-10688
MD-BJ-5168

[R5PX598DFF

uVE8ABCB73 a ABA9DA00

[R5PX5C9DF

uVEBABCC7

[R5Sd5>E9>

uVEBA99C7

[R5Sd5>E9A

uVEBA99F7

[R5Sd5BE>8

uVE8A99F7

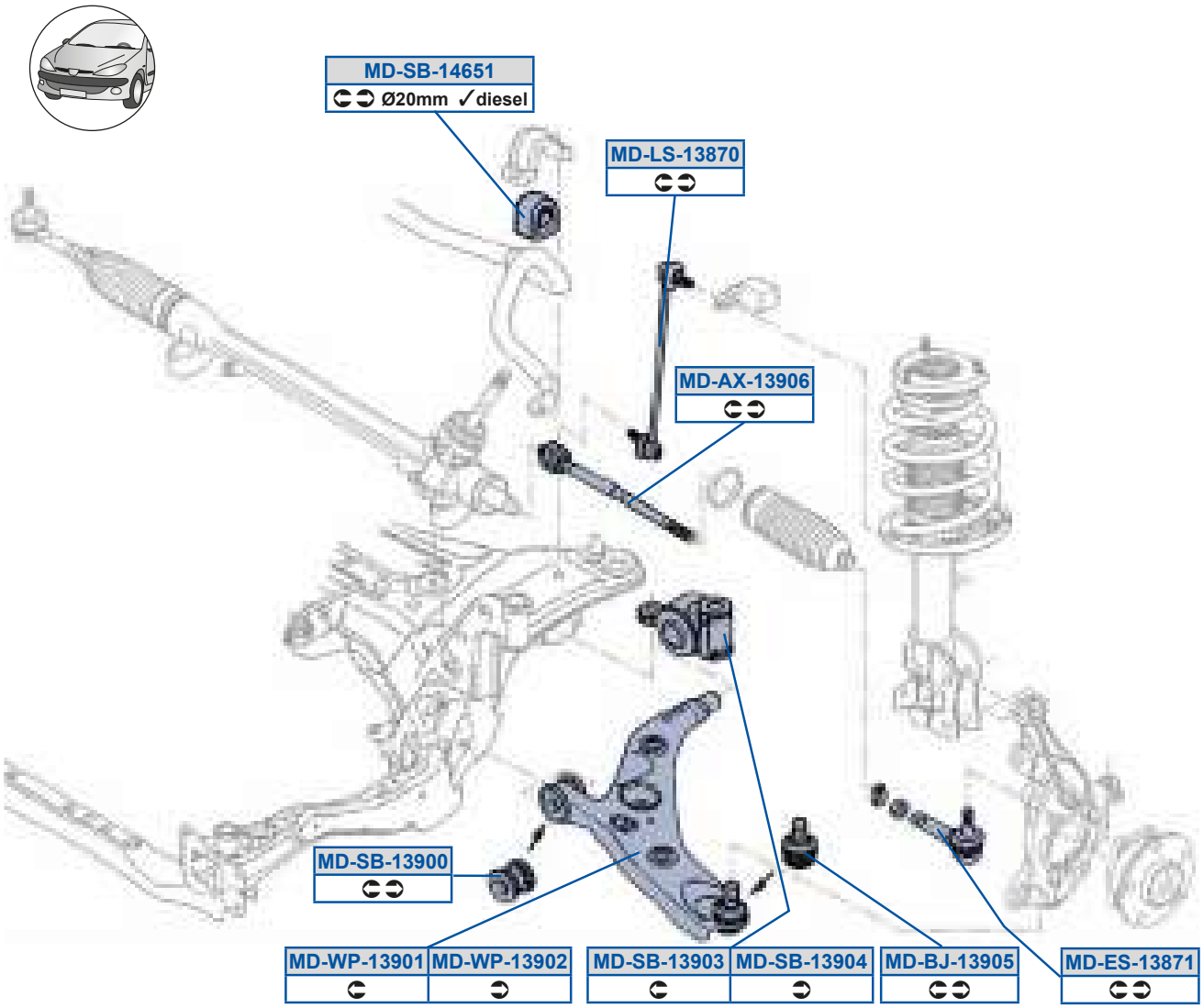
MD-SB-14651
Ø20mm ✓diesel
MD-LS-13870
MD-AX-13906
MD-SB-13900
MD-WP-13901
MD-WP-13902
MD-SB-13903
MD-SB-13904
MD-BJ-13905
MD-ES-13871

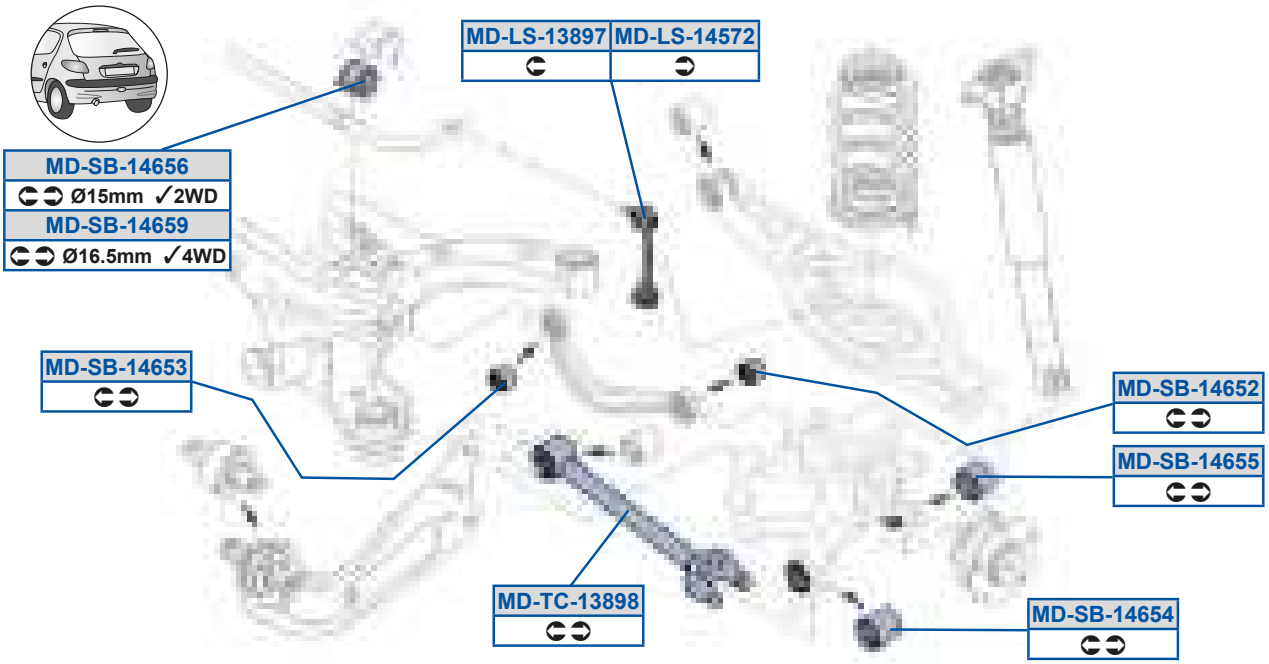
MD-LS-13897
MD-LS-14572
MD-SB-14656
Ø15mm ✓2WD
MD-SB-14659
Ø16.5mm ✓4WD
MD-SB-14653
MD-SB-14652
MD-SB-14655
MD-TC-13898
MD-SB-14654

MOOG

[R5Oi 59AG8D
YRA8A99B73YRA8A99B70

[R5dP59AG8B
YRACABA77R /40

[R5eQ59AFGF
YRAC9FC77

[R5PX59AG8C
YRACABA77R /40

[R5dP59BDC9
YRD84AB48CDP3YRD84AB48CDQ

[R5h a59AG89
UBDQABAC73UVi GABAC70

[R5Sd59AFE9
YRA8A99F7

[R5dP59BDC>
YRAC9FBC7

[R5h a59AG8>
UBDQABA773UVi GABA770

[R5Zd59AFE8
YRACAB8E7

[R5dP59BDCA
YRAC9FBF7

[R5Zd59AFGE
YRA89F8G7

[R5dP59BDCB
YRAC9FD79

[R5Zd59BCE>
YRA89F8E7

[R5dP59BDCC
YRAC9FBA70

[R5dP59AG88
YRACABBE7Q

[R5dP59BDCD
YRA89F8CDP

[R5dP59AG8A
YRACABA77R /40

[R5dP59BDCG
YRAC9F8CDP

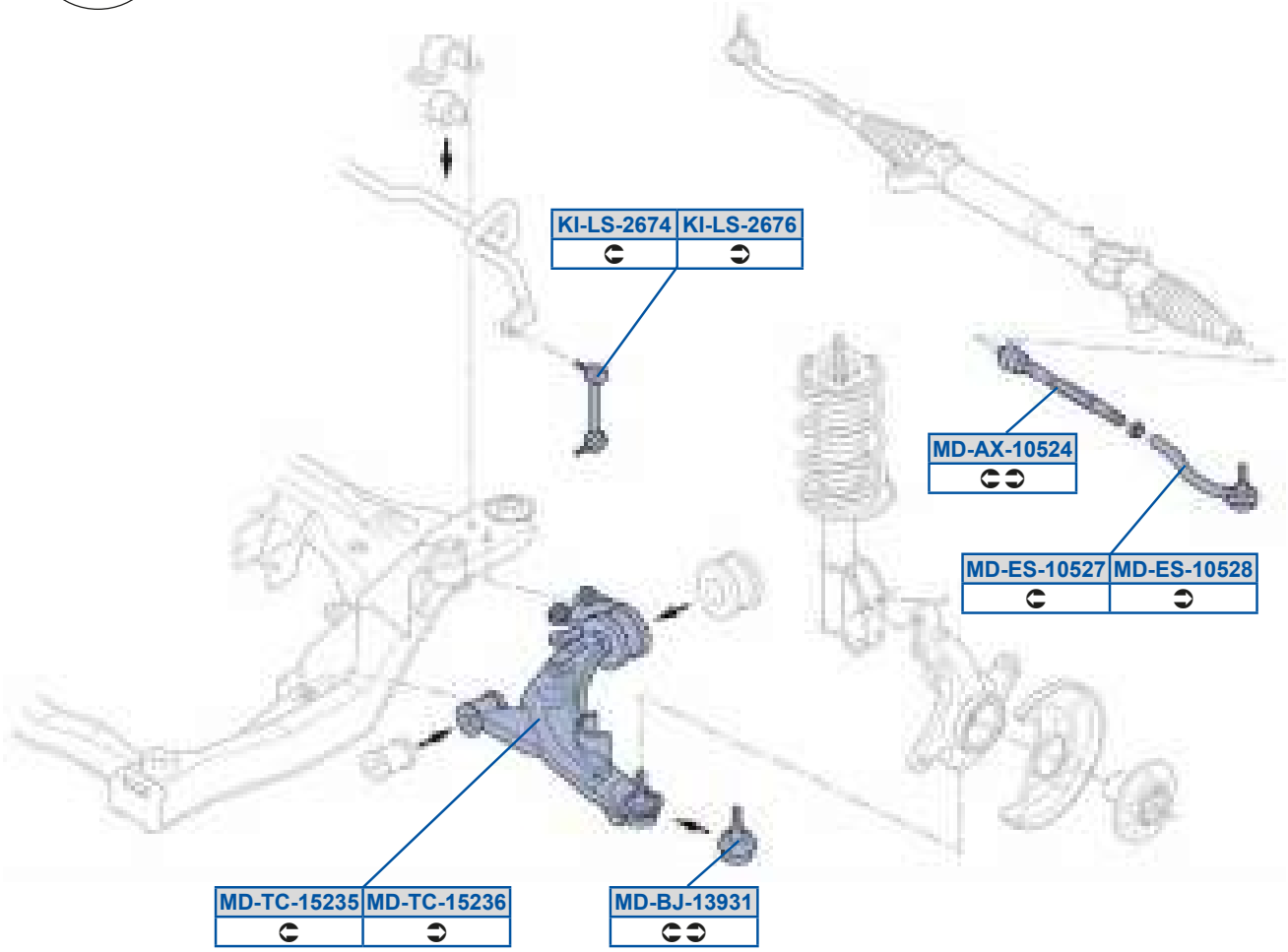
KI-LS-2674
KI-LS-2676
MD-AX-10524
MD-ES-10527
MD-ES-10528
MD-TC-15235
MD-TC-15236
MD-BJ-13931

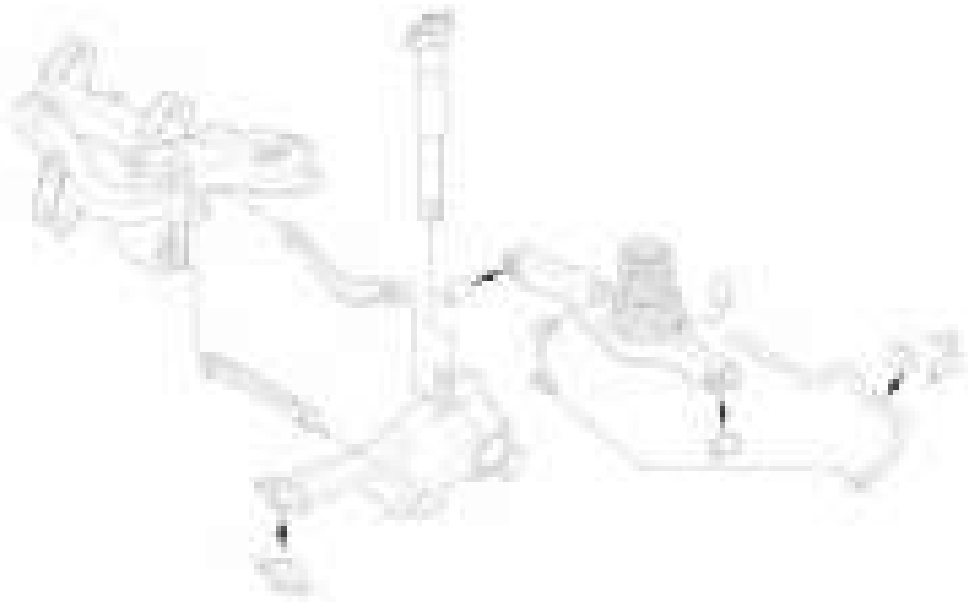

MOOG

YWZd5>DEB
T8C8AB8E73U090AB8E70

YWZd5>DED
U090AB8C703YU090AB8C70

[R5Oi 598C>B
SU98A99B7

[R5PX59AGA9
SU98ABAC7R /40

[R5Sd598C>E
SU98A99G703SU98A99G7P

[R5Sd598C>F
SU98A99F703SU98A99F7P

[R5eQ59C>AC
SU98ABAC7R3SVBBABAC7

[R5eQ59C>AD
SU98ABA77R3SVBBABA77

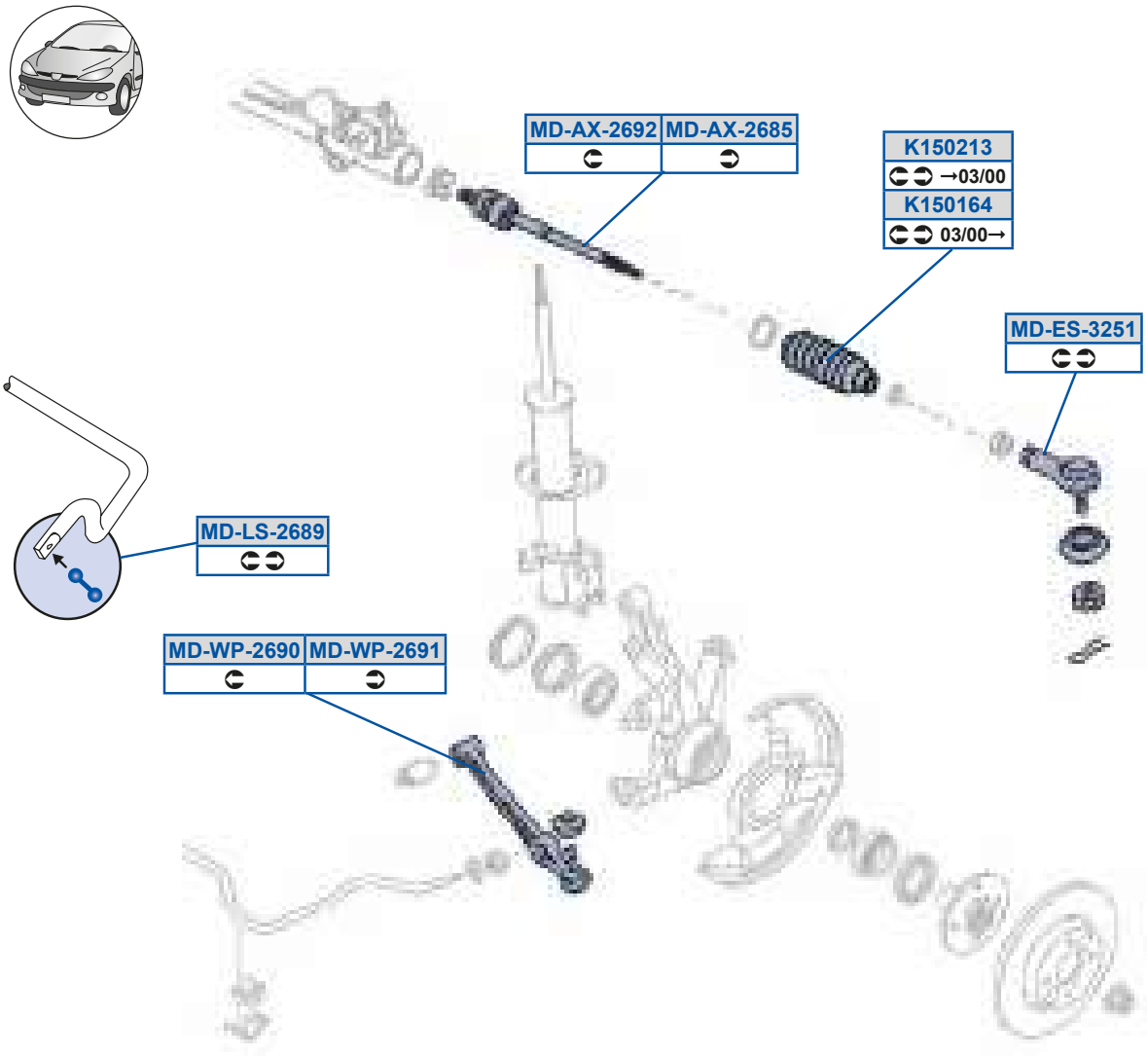
MD-AX-2692
MD-AX-2685
K150213
→03/00
K150164
03/00→
MD-ES-3251
MD-LS-2689
MD-WP-2690
MD-WP-2691

Y9C89DB
RQACA989C

Y9C8>9A
P987A989 3R987A989

[R5Oi 5>DFC
R879A99C73R879A99C70

[R5Oi 5>DG>
R879A99B73R879A99B70

[R5Sd5A>C9
F0P7A99F73F0P9A99F7

[R5Zd5>DFG
S07AAB8E73S07AAB8E70

[R5h a5>DG8
R978ABAC70

[R5h a5>DG9
R978ABA77S

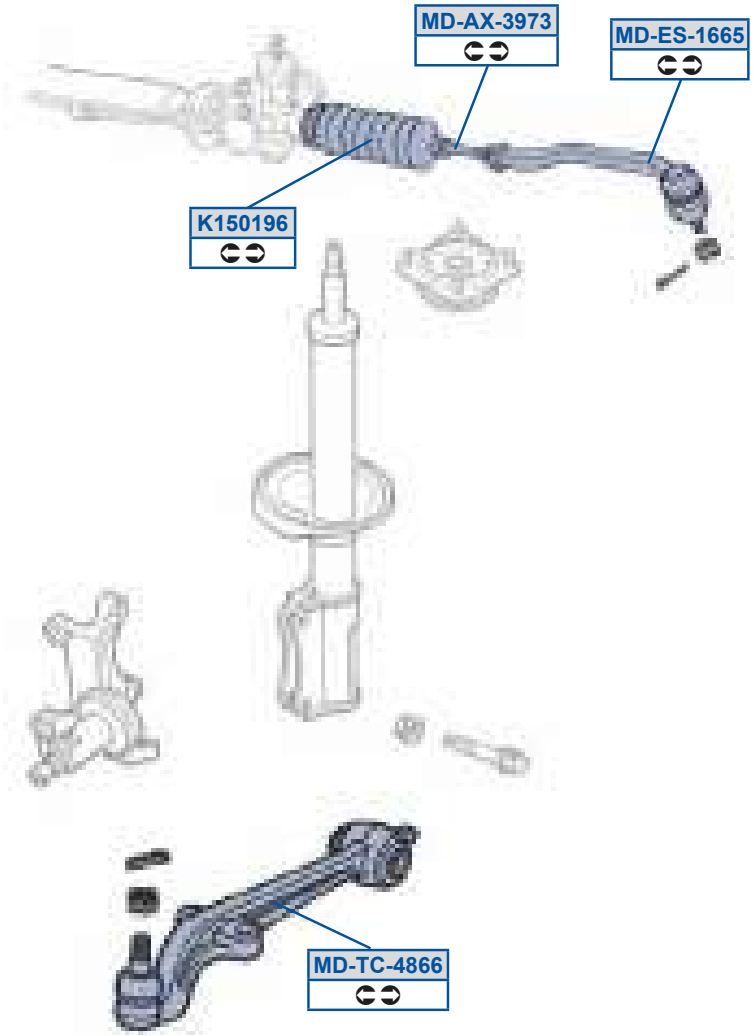

MOOG

Y9C89GD
ZPF9A989

[R5Oi 5AGEA
ZO78A988C

[R5Sd59DDC
FOZ8A99F7

[R5eQ5BFDD
ZPF9ABA77

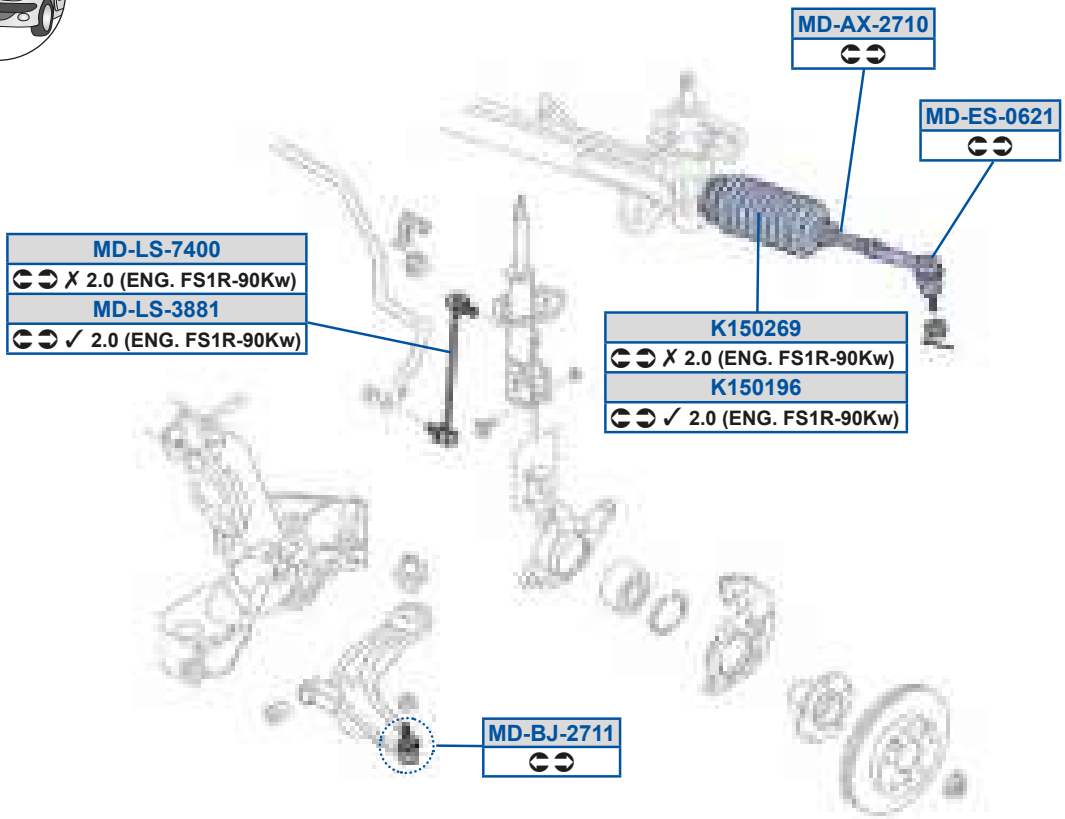
MD-AX-2710
MD-ES-0621
MD-LS-7400
✗ 2.0 (ENG. FS1R-90Kw)
MD-LS-3881
✓ 2.0 (ENG. FS1R-90Kw)
K150269
✗ 2.0 (ENG. FS1R-90Kw)
K150196
✓ 2.0 (ENG. FS1R-90Kw)
MD-BJ-2711

Y9C89GD
ZPF9A989

Y9C8>DG
ZQD9A989C3ZQD9A989C0

[R5Oi 5>E98
ZQD9A99B7P3ZQD9A99BD

[R5PX5>E99
ZQD9A99F7

[R5Sd58D>9
F0UAA99F73F0UBA99F7

[R5Zd5AFF9
ZQD9AB8E73ZQD9AB8E70

[R5Zd5EB88
ZQE7AB8E7

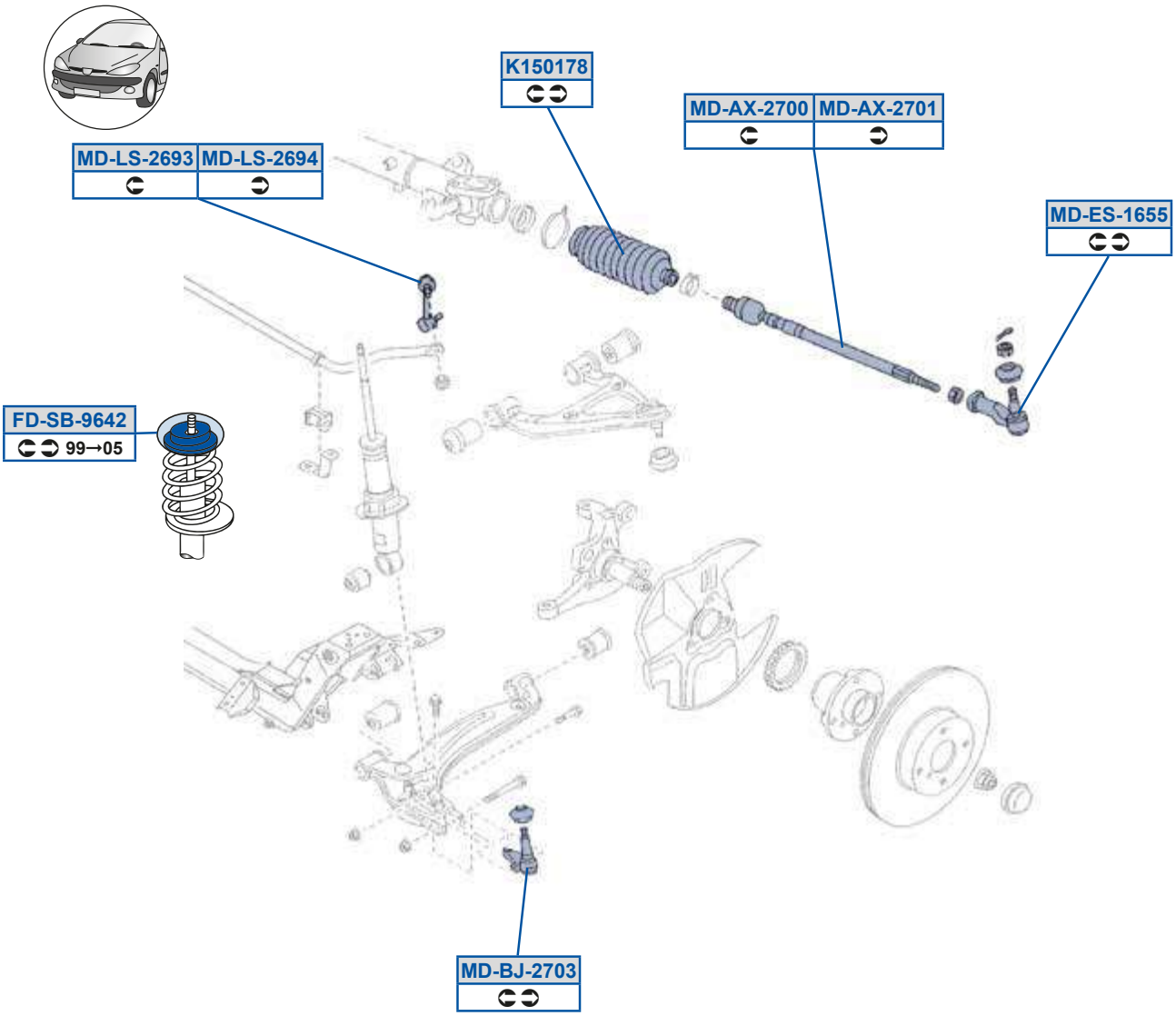
K150178
MD-AX-2700
MD-AX-2701
MD-LS-2693
MD-LS-2694
MD-ES-1655
FD-SB-9642
99→05
MD-BJ-2703

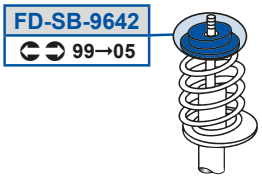
FD-SB-9642
99→05

TR5dP5GDB>
TBP 8FO8EGP3a R87E9FEEC

Y9C89EF
PBCDA989C3d Q87A989C

[R5Oi 5>E88
d Q87A99C73d Q87A99C7O

[R5Oi 5>E89
d Q87A99B73d Q87A99B7O

[R5PX5>E8A
d O78ABCC73d O78ABCC7O

[R5Sd59DCC
FO78ABCC73FOd 8A99F7

[R5Zd5>DGA
d Q87AB8E7

[R5Zd5>DGB
d Q87AB8C7

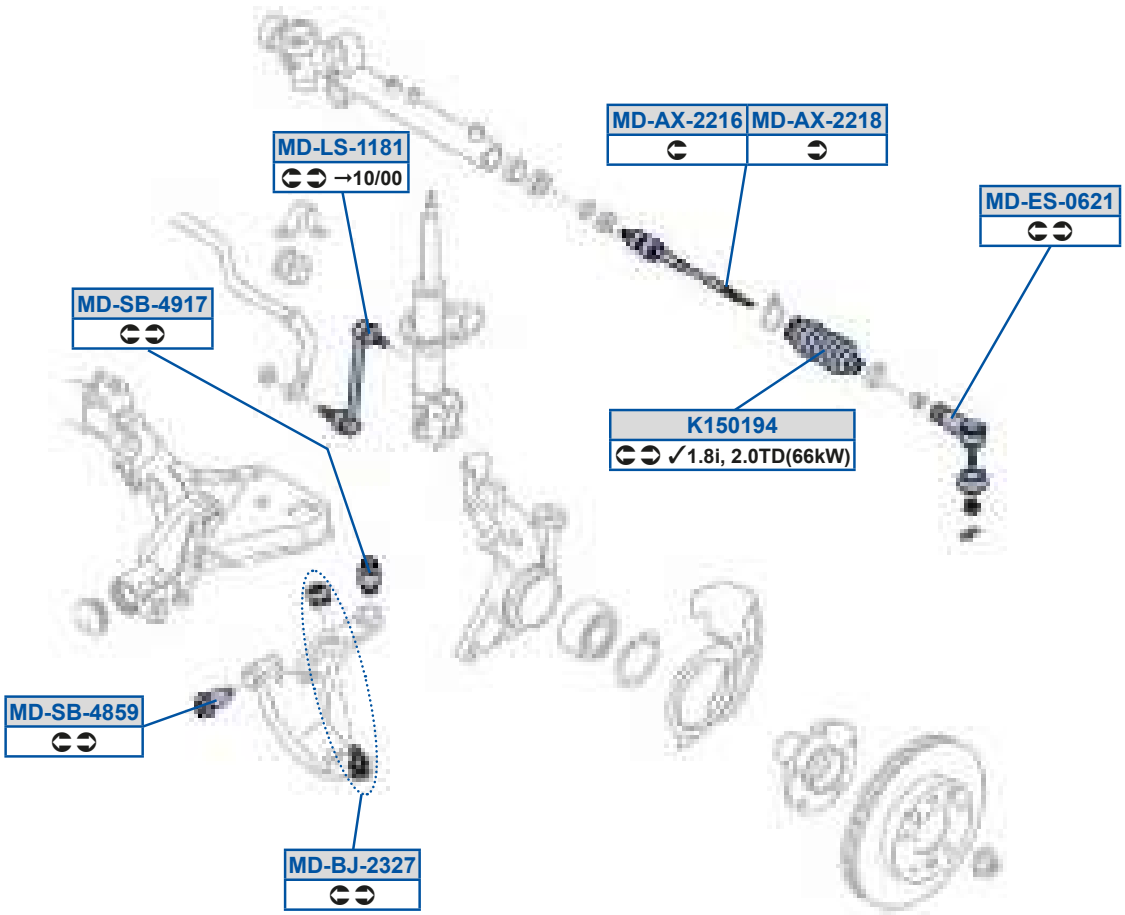
MD-LS-1181
→10/00
MD-AX-2216
MD-AX-2218
MD-ES-0621
MD-SB-4917
K150194
✓1.8i, 2.0TD(66kW)
MD-SB-4859
MD-BJ-2327

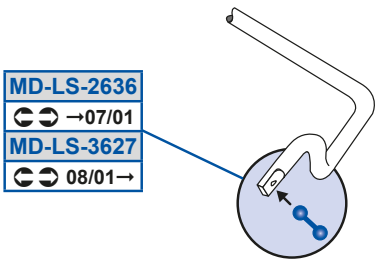
MD-LS-2636
→07/01
MD-LS-3627
08/01→

MOOG

Y9C89GB
PX9CA989C3UX9CA989C

[R5dP5BFCG
P9CRABBE7

[R5Oi 5>>9D
P9CRA99B7

[R5dP5BG9E
P9CRABBD7

[R5Oi 5>>9F
P9CRA99C7

[R5PX5>A>E
ZQD9ABCC7

[R5Sd58D>9
F0UAA99F73F0UBA99F7

[R5Zd599F9
P79DnAB8E73P9DnAB8E7

[R5Zd5>DAD
P9Dn9F8E7

[R5Zd5AD>E
PA7V9F8E7P

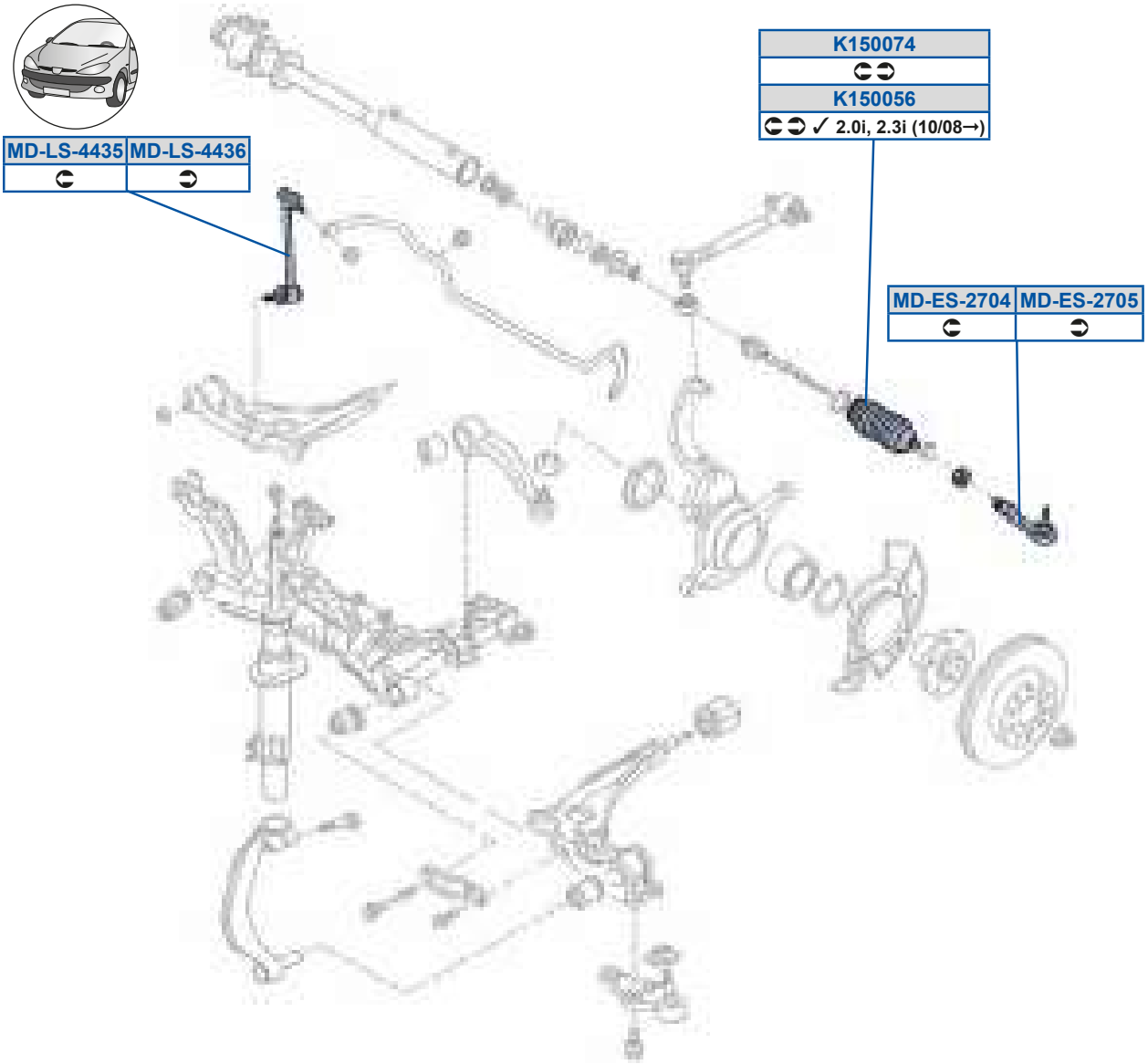
MD-LS-4435
MD-LS-4436
K150074
K150056
✓ 2.0i, 2.3i (10/08→)
MD-ES-2704
MD-ES-2705

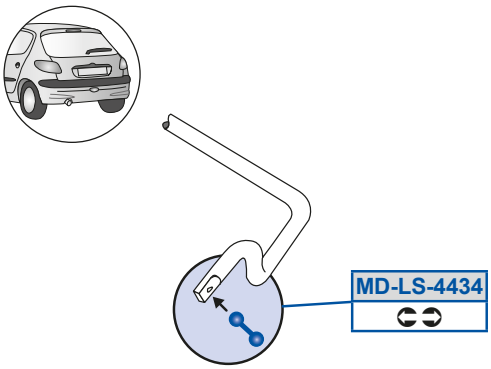
MD-LS-4434

Y9C88CD
VAA7A989C3VUA7A989C

Y9C88EB
BCCACFEE7B3t 07BA9T7

[R5Sd5>E8B
t 778A99G7

[R5Sd5>E8C
t 778A99F7

[R5Zd5BBAB
t 7789F8E703t 7789F8E7P

[R5Zd5BBAC
t 778AB8E 0

[R5Zd5BBAD
t 778AB8E70

[Sc QSRSd5PS] k

05QZ0dd 0h 9DF1	8E7GE 8F78B		

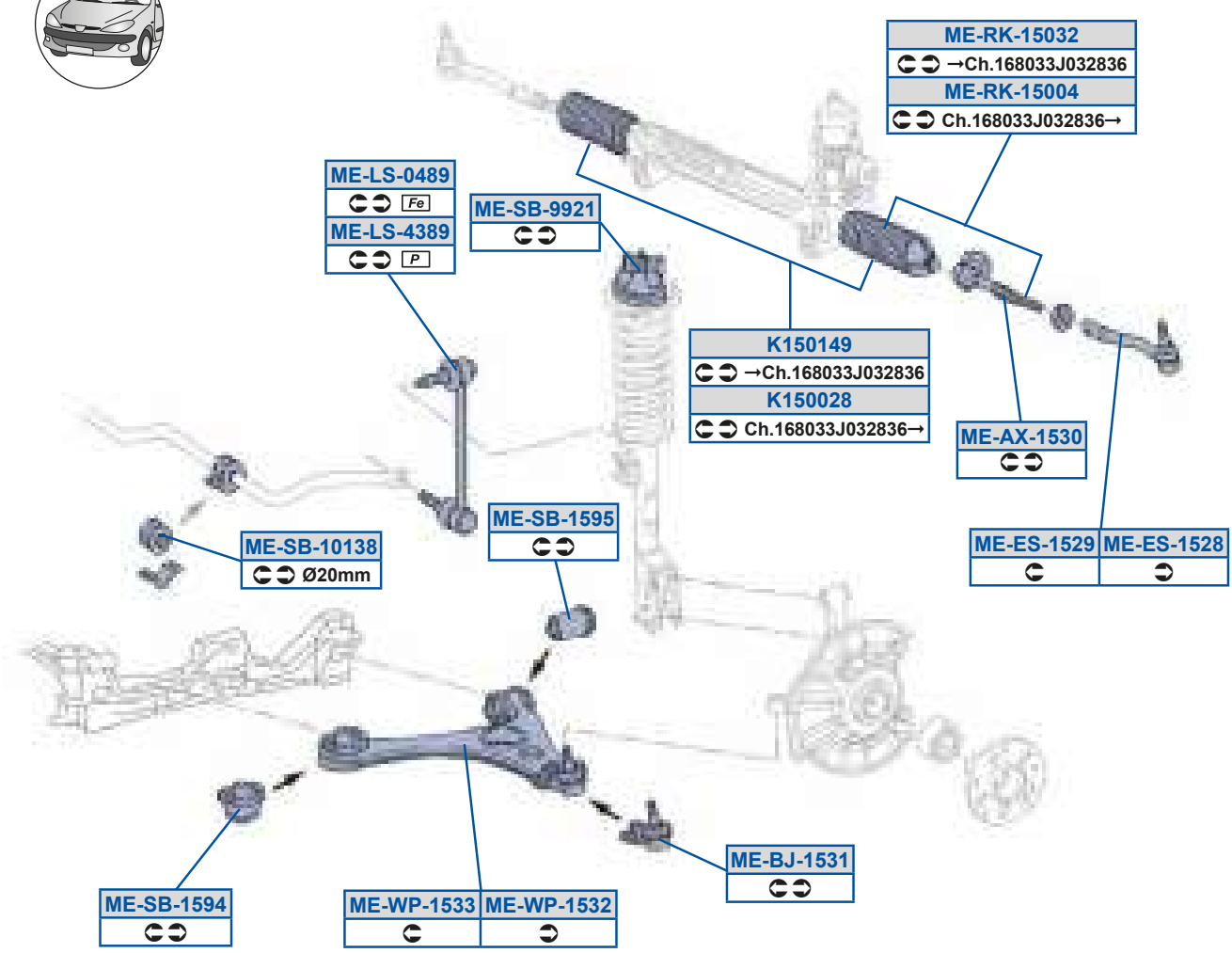

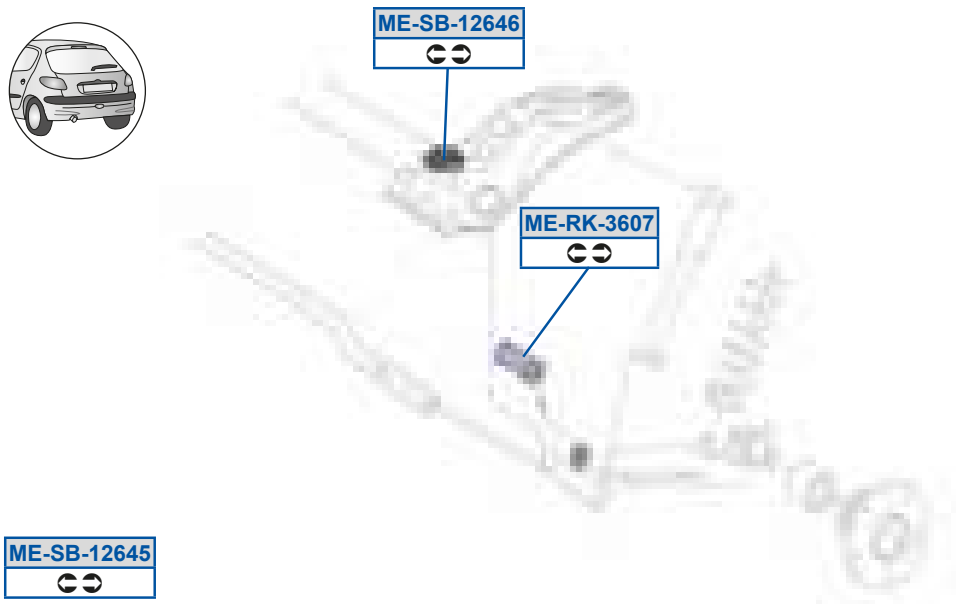

MOOG

Y9C88>F
8DFBD79B77

[S5cY59C88B
8DFAA78AAC

[S5dP5GG>9
8DFA977AEA

Y9C89BG
8DFBD79A7738DFBDA78GD

[S5cY59C8A>
8DFAA78AAC

[S5ha59CA>
8DFAA77G7E38DFAA7897E

[S5Oi 59CA8
8DFAA78AAC

[S5cY5AD8E
8DFGF87C8F

[S5ha59CAA
8DFAA77F7E38DFAA7887E

[S5PX59CA9
8DFAAA789E38DFAAA799E

[S5dP5989AF
8DFA9A7AFC

[S5Sd59C>F
8DFAA789AC38DFAA78DAC

[S5dP59>DBC
8DFAC879B938DFAC888B9

[S5Sd59C>G
8DFAA788AC38DFAA78CAC

[S5dP59>DBD
8DFAC878B9

[S5Zd58BFG
8DFA977AFG38DFA977CFG

[S5dP59CGB
8DFAAA798B38DFAAA7D8B

[S5Zd5BAFG
8DFA977AFG38DFA977CFG

[S5dP59CGC
8DFAAA778B38DFAAA7E8B

[Sc QSRSd5PS] k

05QZOdd 0h 9DG1	8G78B 8D79;	P5QZOdd 0h ; BC1	8A78C 99799

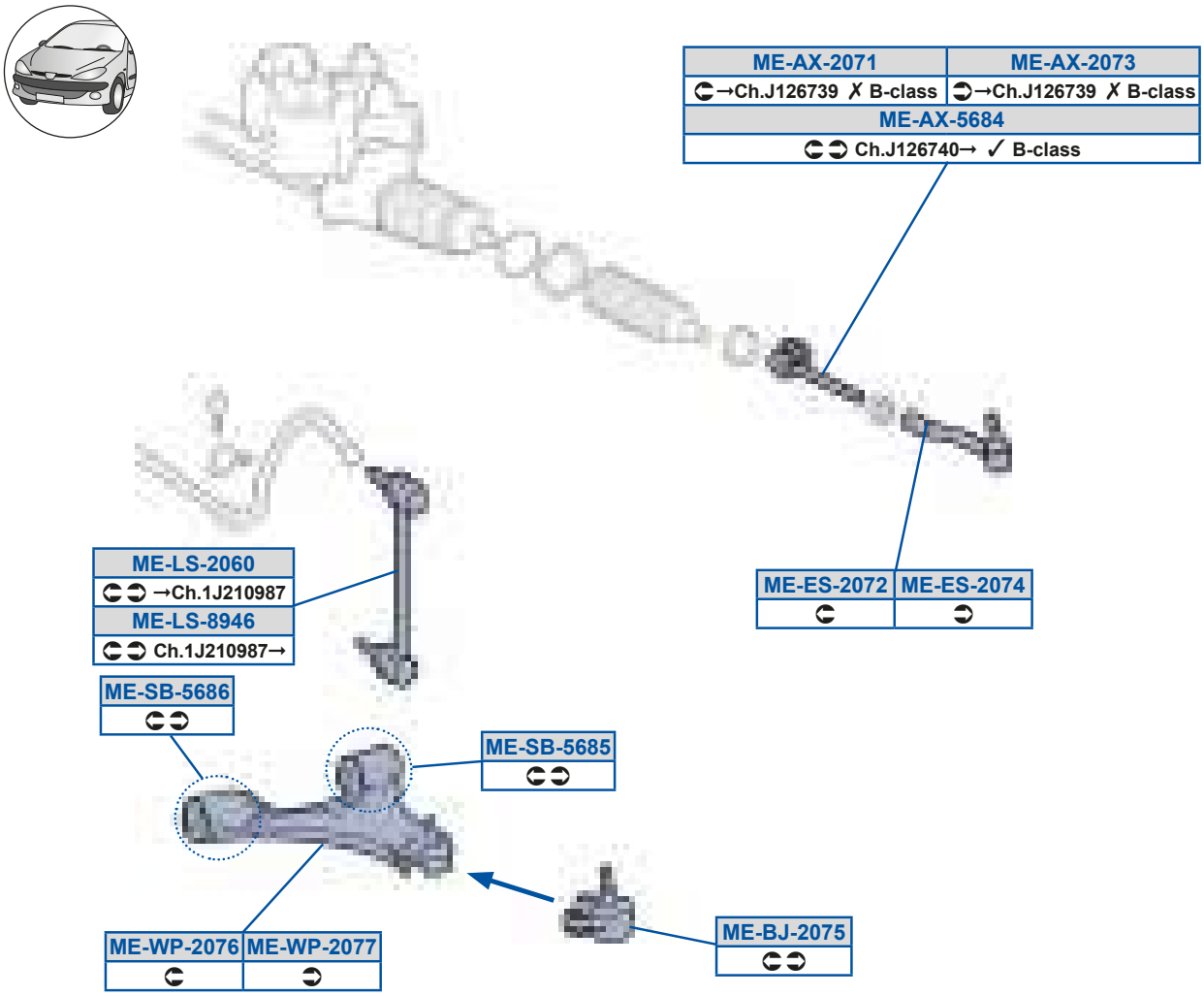

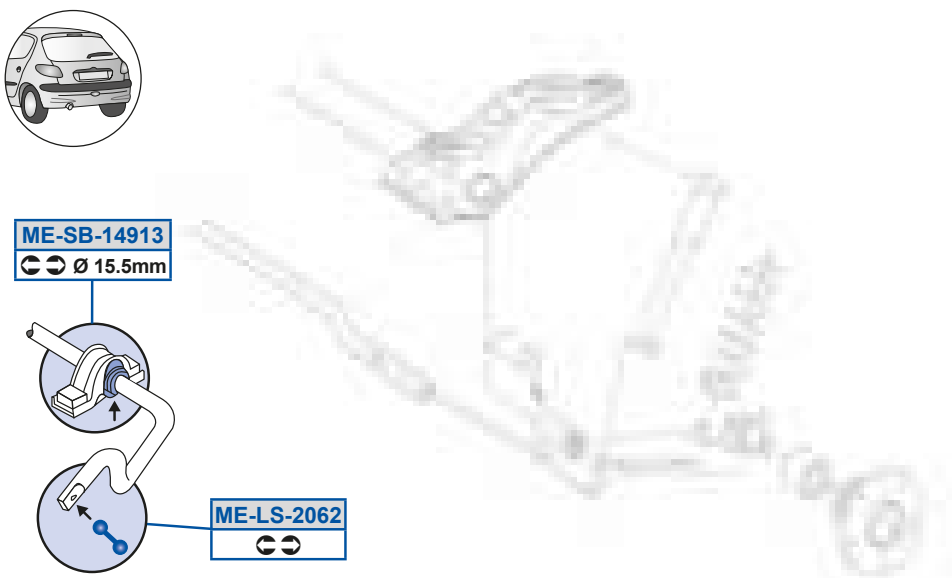

MOOG

[S5Oi 5>8E9
8DGAA77B7A

[S5Zd5FGBD
8DGA977GFG38DGA978AFG

[S5Oi 5>8EA
8DGAA77E7A

[S5dP59BG9A
89BA9D78F8

[S5Oi 5CDFB
8DGAA77F7A38DGAA77G7A

[S5dP5CDFC
8DGAAA788B

[S5PX5>8EC
8DGAAA789E

[S5dP5CDFD
8DGAAA778B

[S5Sd5>8E>
8DGAA77C7A

[S5h a5>8ED
8DGAA77C7E38DGAA77E7E

[S5Sd5>8EB
8DGAA77D7A

[S5h a5>8EE
8DGAA77D7E38DGAA77F7E

[S5Zd5>8D8
8DGA977GFG38DGA978AFG

[S5Zd5>8D>
8DGA977CFG

[Sc QSRSd5PS] k

05QZ0dd 0h 9ED1	8D79;	P5QZ0dd 0h ; BD1	99799
P5QZ0dd 0h ; BD4h ; B; 1	8E79B		

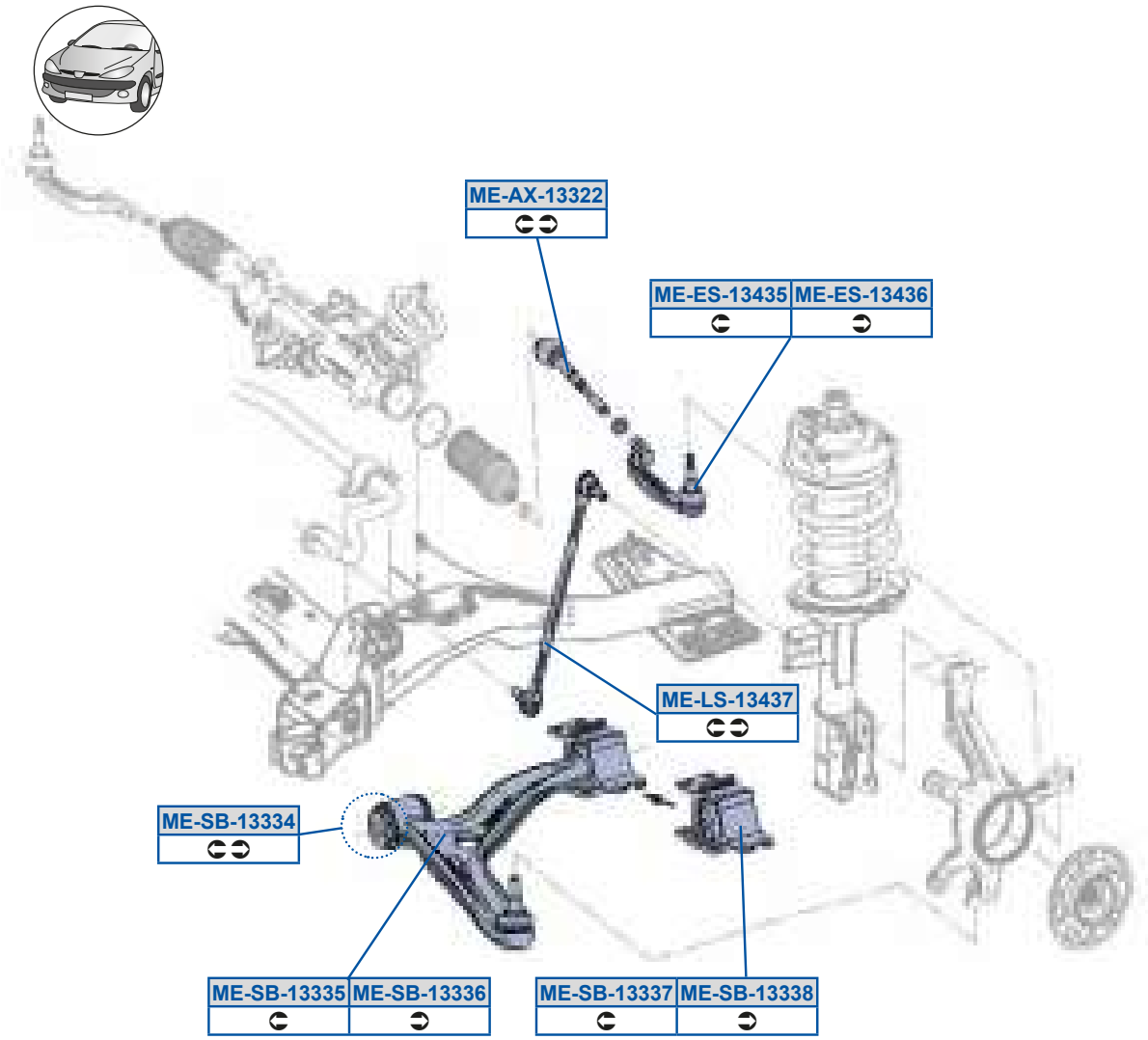

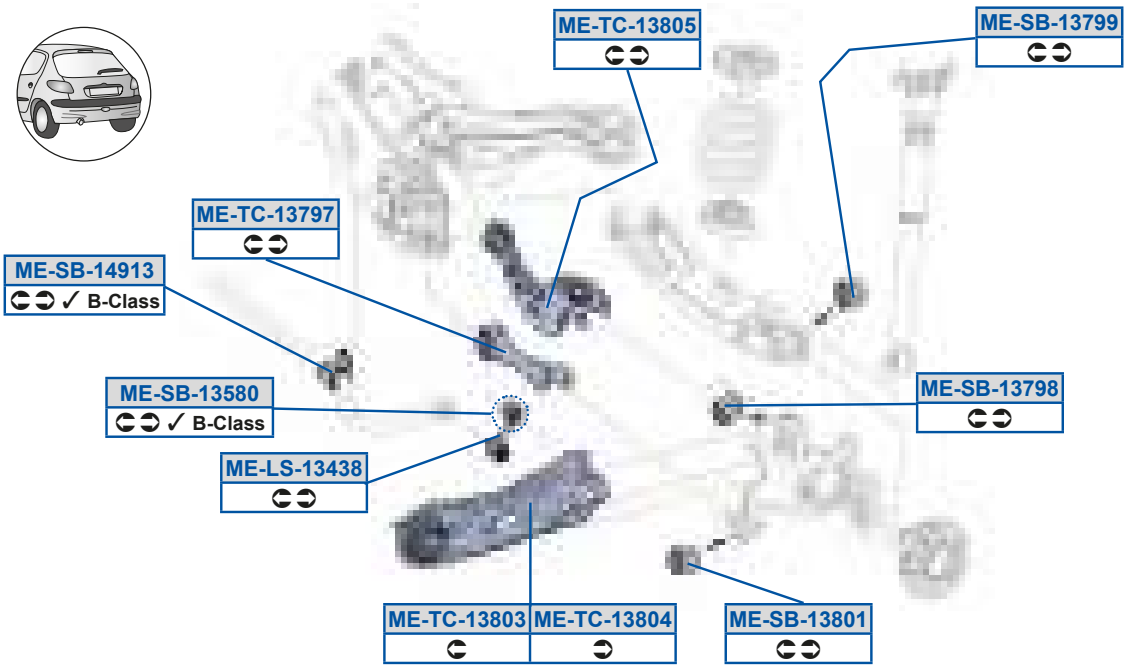

MOOG

[S5Oi 59AA>>
9BDAAF7777

[S5dP59ACF8
9BDA977BFG /40

[S5eQ59AF8A
9BDAC77B7D

[S5Sd59ABAC
9BDAA78E77

[S5dP59AEGF
9BDAC978DC

[S5eQ59AF8B
9BDAC77C7D

[S5Sd59ABAD
9BDAA78F77

[S5dP59AEGG
9BDAC97GDC

[S5eQ59AF8C
9BDAC7877D

[S5Zd59ABAE
9BDA977DFG

[S5dP59AF89
9BDAC979DC

[S5Zd59ABAF
9BDA977BFG39BDA977EFG

[S5dP59BG9A
89BA9D78F8

[S5dP59AAAB
9BDAAA788B

[S5eQ59AAAC
9BDAA78E7E39BDAA7BE77

[S5dP59AAAE
9BDAAA778B39BDAAA7877

[S5eQ59AAAD
9BDAA78F7E39BDAA7BF77

[S5dP59AAAF
9BDAAA797739BDAAA798B

[S5eQ59AEGE
9BDAC777CA

[Sc QSRSd5PS] k

Q5QZOdd 0h ; 8; 1	8A7GA 8C788	Q5QZOdd e5[wx 0d; 8; 1	8D7GD 8A789

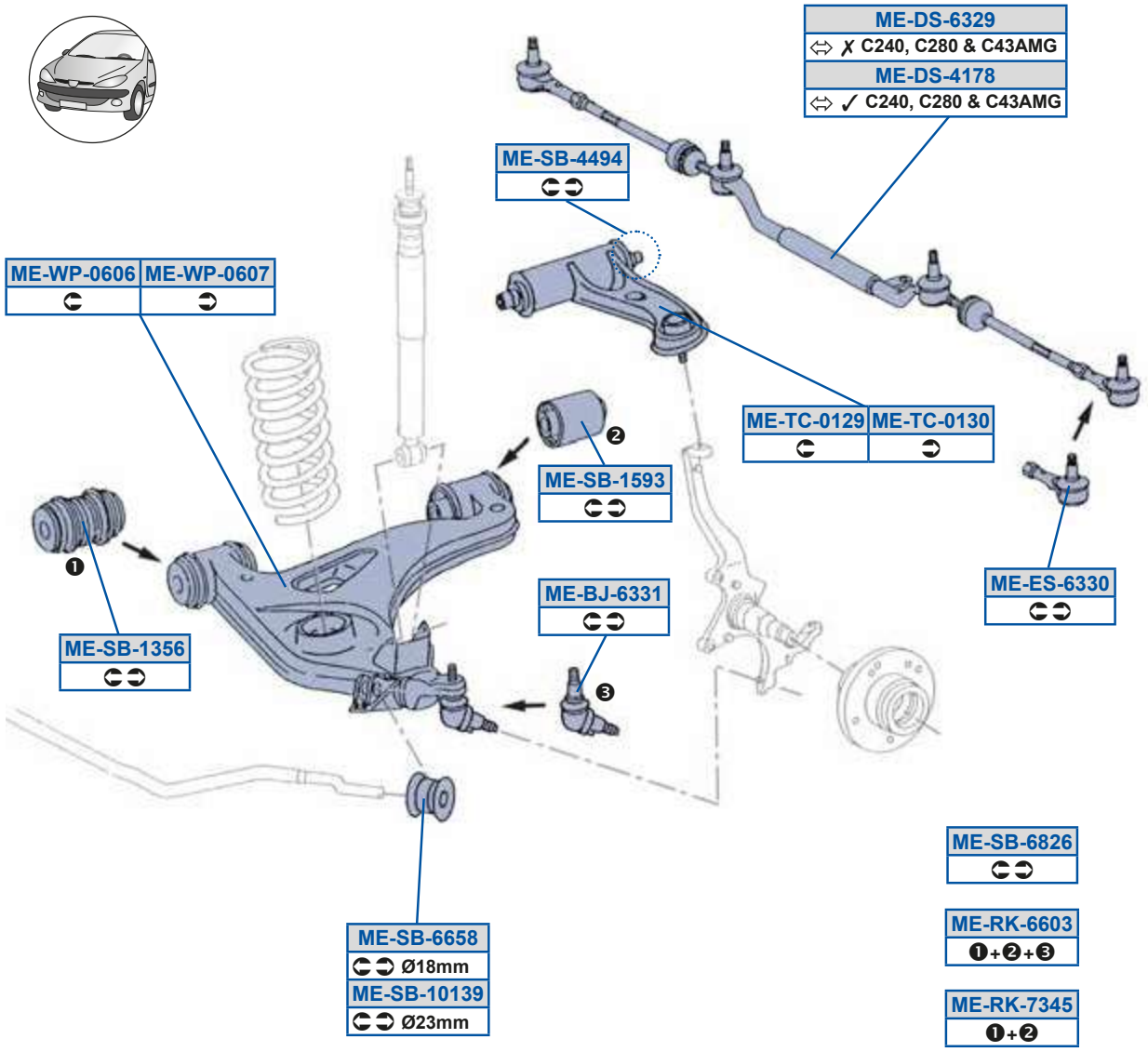

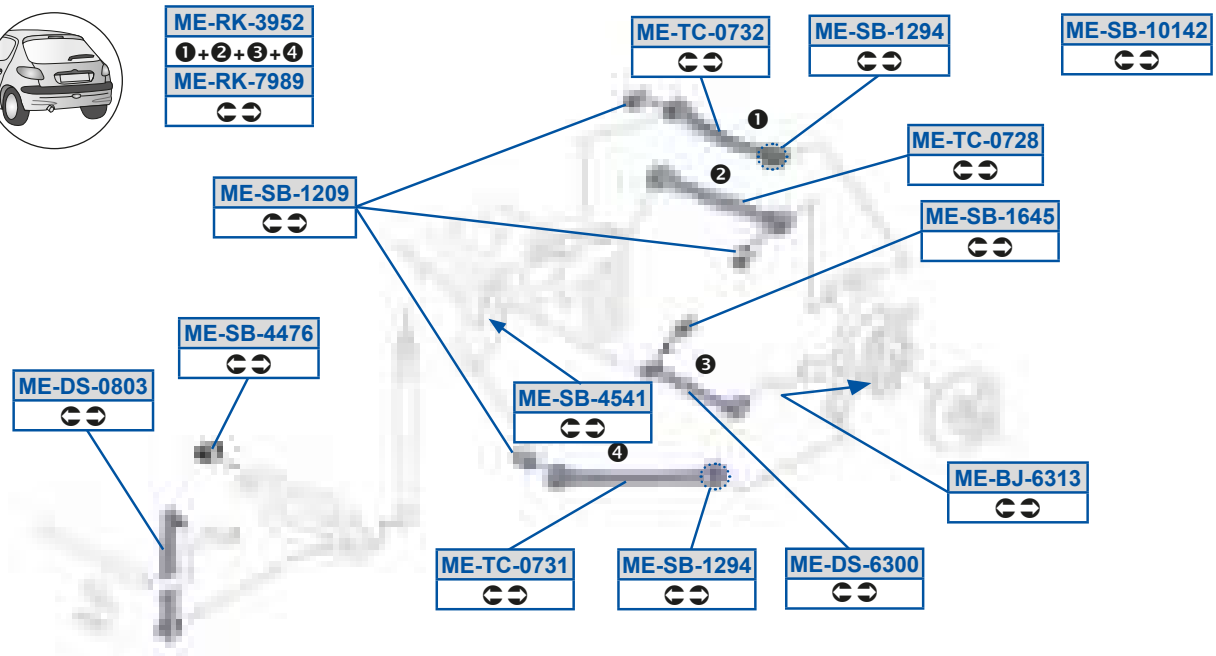

MOOG

[S5PX5DA9A
978AC9779E3997AC9799E

[S5PX5DAA9
979AAA779E3987AA777AC

[S5Rd58F8A
89BA9779FG

[S5Rd5B9EF
979BD77C7C

[S5Rd5DA88
89BAC778CA3978AC79GCA

[S5Rd5DA>G
979BD77B7C

[S5Sd5DAA8
777AA7EBAC3778AA7EBAC

[S5cY5AGC>
987AC7AF7D3987AC7AF7Do8

[S5cY5DD8A

[S5cY5EABC
979AA777EC

[S5cY5EGFG
8B7AC77FE738B7AC787E7

[S5dP5989AG
979A9A79FC

[S5dP5989B>
97AAC878B9

[S5dP59>8G
89BAC9ABDC389BAC9G7DC

[S5dP59>GB
89BAC9ACDC

[S5dP59ACD
979AAADE8B3979AAAFE8B

[S5dP59CGA
979AAADB8B3979AAAFB8B

[S5dP59DBC
89BAC9BADC3978AC9FEDC

[S5dP5BBED
89BAC9E7DC389BAC9FBDC

[S5dP5BBGB
979AAAEE8B

[S5dP5BCB9
89BAC77AB8389BAC7DB7F

[S5dP5DDCF
89BA9A9AFC389BA9ABGFC

[S5dP5DF>D
89BA9ACBFC

[S5eQ589>G
979 AA7 A7 7E

[S5eQ589A8
979 AA7 97 7E

[S5eQ58E>F
978AC7BE7D3978AC7CD7D

[S5eQ58EA9
89BAC7789G3987AC7779G

[S5eQ58EA>
89BAC7E77D389BAC7E87D

[S5h a58D8D
8E7AA7787E3979AA79D7E

[S5h a58D8E
8E7AA7797E3979AA79E7E

[Sc QSRSd5PS] k

Q5QZOdd 0h ; 8A1	8C788 8; 78E	Q5QZOdd Q x 0QZ; 8A1	8A789 8D799
Q5QZOdd e5[wx 0d; 8A1	8A789 8F78E		

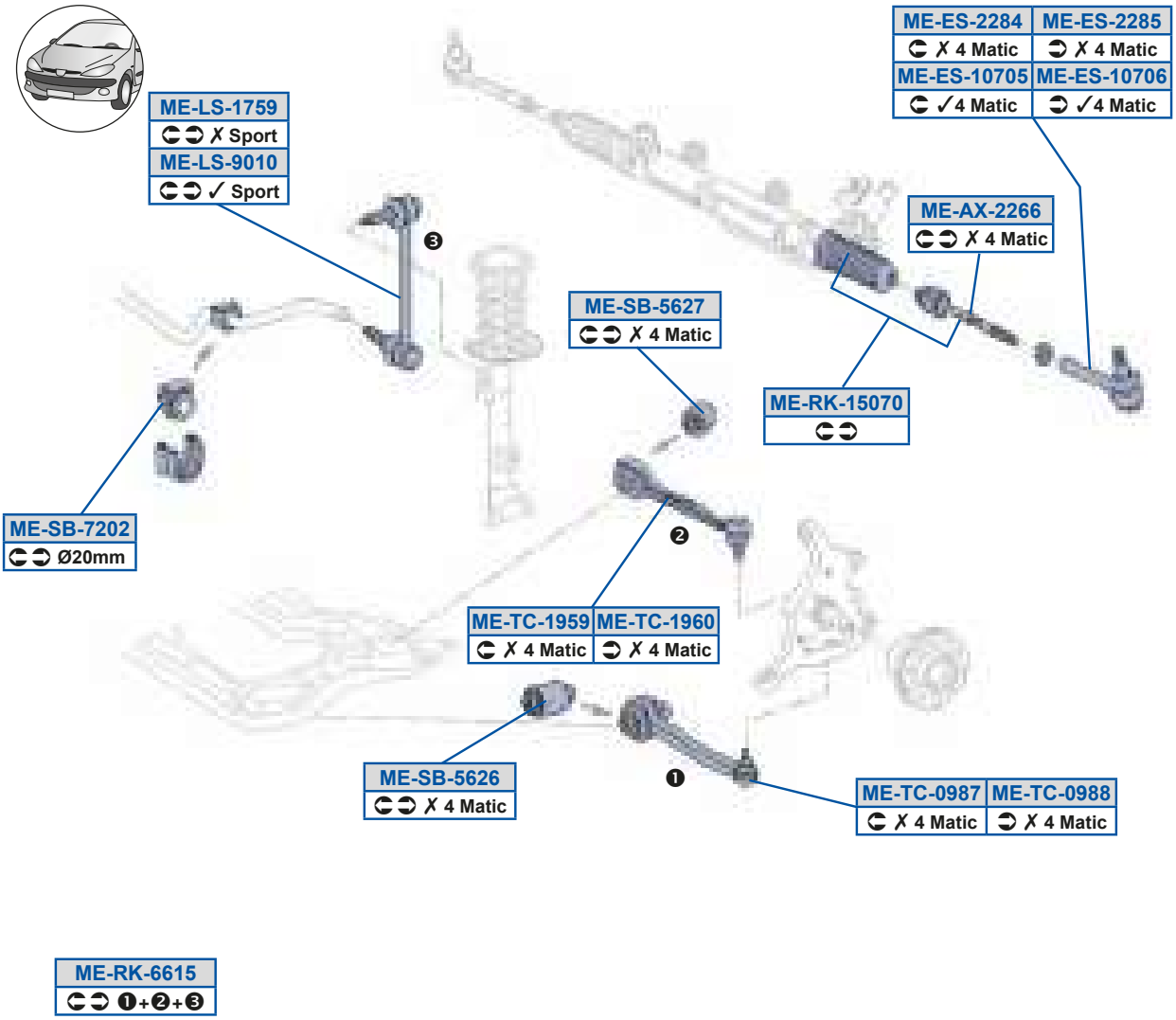

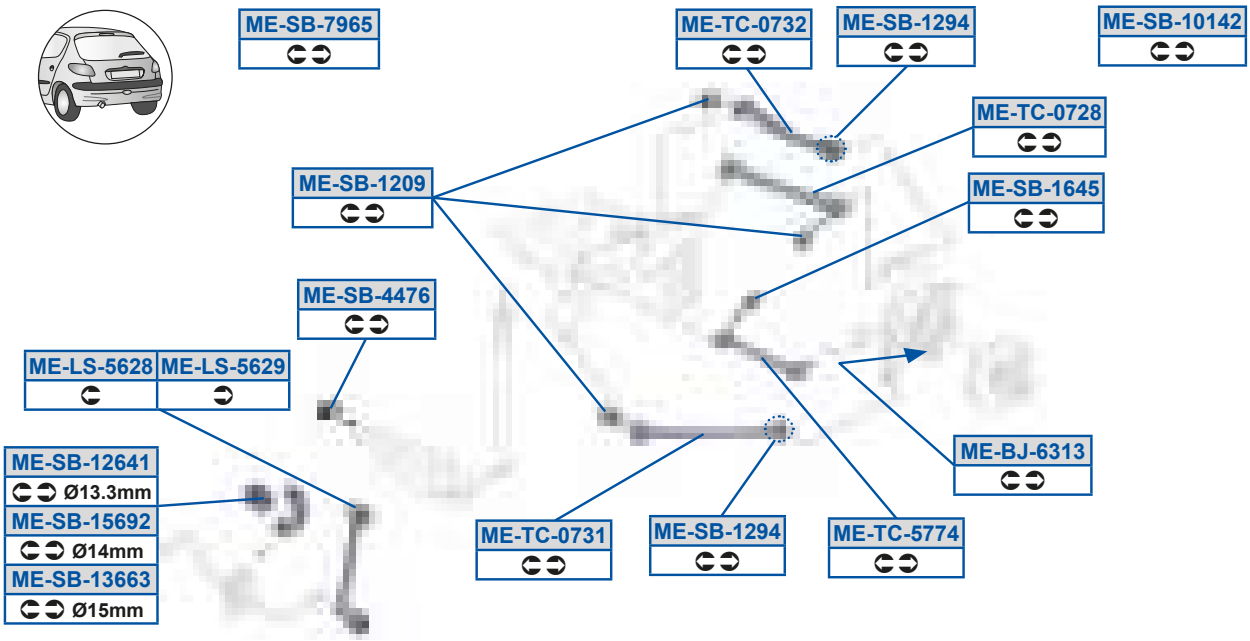

MOOG

[S5Oi 5>>DD
988AA79G7A3988AAF778C

[S5PX5DA9A
978AC9779E3997AC9799E

[S5Sd598E8C
97AAA7AA7A

[S5Sd598E8D
97AAA7AB7A

[S5Sd5>>FB
97AAA78G7A397AAA79A7A

[S5Sd5>>FC
97AAA7977A397AAA79B7A

[S5Zd59ECG
97AA977BFG397AA979CFG

[S5Zd5CD>F
97AA977EFG

[S5Zd5CD>G
97AA977FFG

[S5Zd5G898
97AA9798FG397AA979DFG

[S5cY59C8E8
988AA79G7A3988AAF778C

[S5cY5DD9C

[S5dP5989B>
97AAC878B9

[S5dP59>8G
89BAC9ABDC389BAC9G7DC

[S5dP59>DB9
97AA9D7AF8

[S5dP59>GB
89BAC9ACDC

[S5dP59ADDA
97AA9D78F8

[S5dP59CDG>
97AA9D79F8

[S5dP59DBC
89BAC9BADC3978AC9FEDC

[S5dP5BBED
89BAC9E7DC389BAC9FBDC

[S5dP5CD>D
97AAAA7A8B397AAAA7G8B

[S5dP5CD>E
97AAAA798B397AAAA878B

[S5dP5E>8>
97AA9A7DFC397AA9A97FC

[S5dP5EGDC
89GAC898B9

[S5eQ58E>F
978AC7BE7D3978AC7CD7D

[S5eQ58EA9
89BAC7789G3987AC7779G

[S5eQ58EA>
89BAC7E77D389BAC7E87D

[S5eQ58GFE
97AAA78G88397AAA7AA88

[S5eQ58GFF
97AAA79788397AAA7AB88

[S5eQ59GCG
97AAA77888397AAA78D88

[S5eQ59GD8
97AAA77988397AAA78E88

[S5eQ5CEEB
97AAC77ACA397AAC77ECA

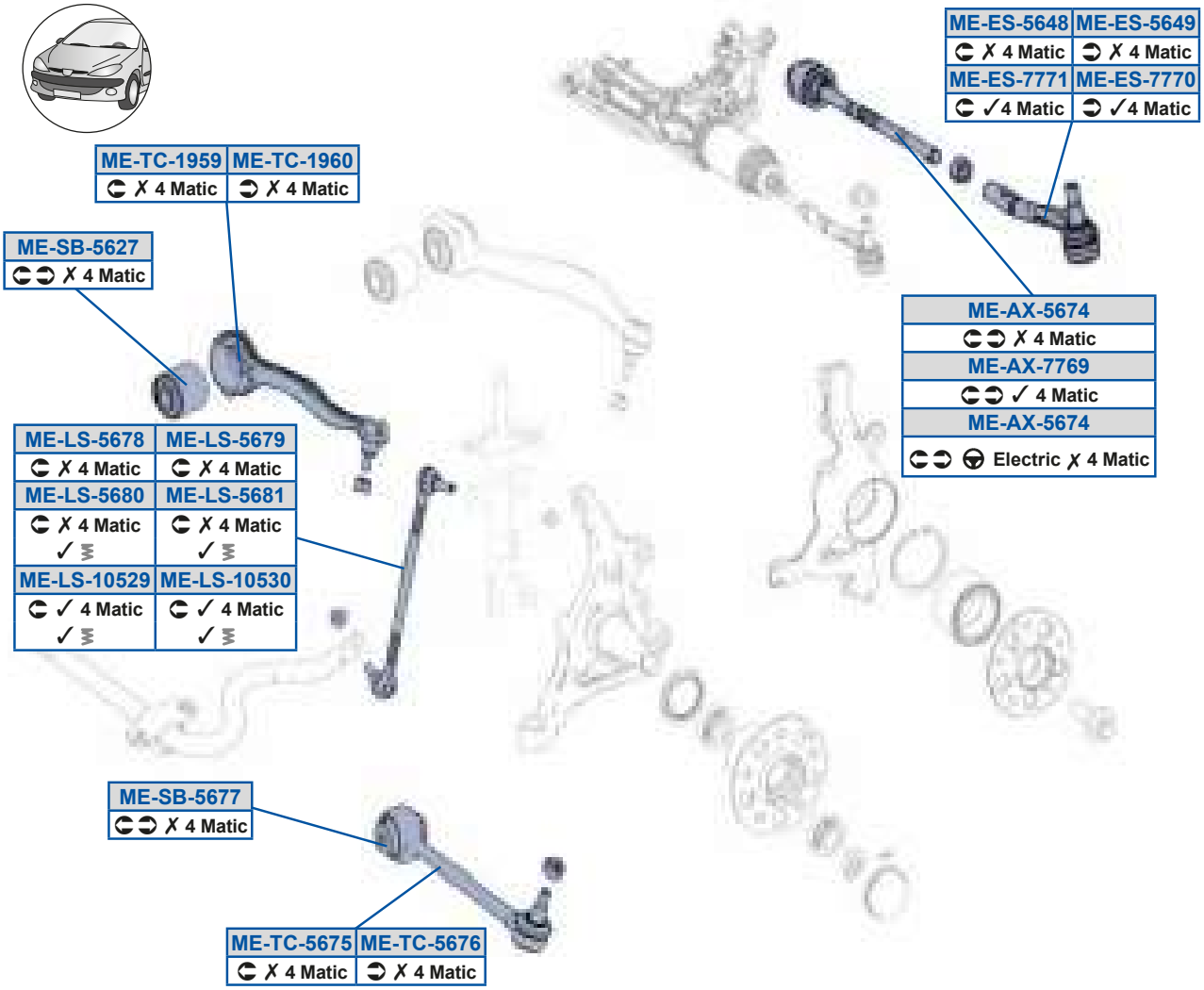
ME-ES-5648
✗ 4 Matic
ME-ES-5649
✗ 4 Matic
ME-ES-7771
✓4 Matic
ME-ES-7770
✓4 Matic
ME-TC-1959
✗ 4 Matic
ME-TC-1960
✗ 4 Matic
ME-SB-5627
✗ 4 Matic
ME-AX-5674
✗ 4 Matic
ME-AX-7769
✓ 4 Matic
ME-AX-5674
Electric ✗ 4 Matic
ME-LS-5678
✗ 4 Matic
ME-LS-5679
✗ 4 Matic
ME-LS-5680
✗ 4 Matic
ME-LS-5681
✗ 4 Matic
ME-LS-10529
✓ 4 Matic
ME-LS-10530
✓ 4 Matic
ME-SB-5677
✗ 4 Matic
ME-TC-5675
✗ 4 Matic
ME-TC-5676
✗ 4 Matic

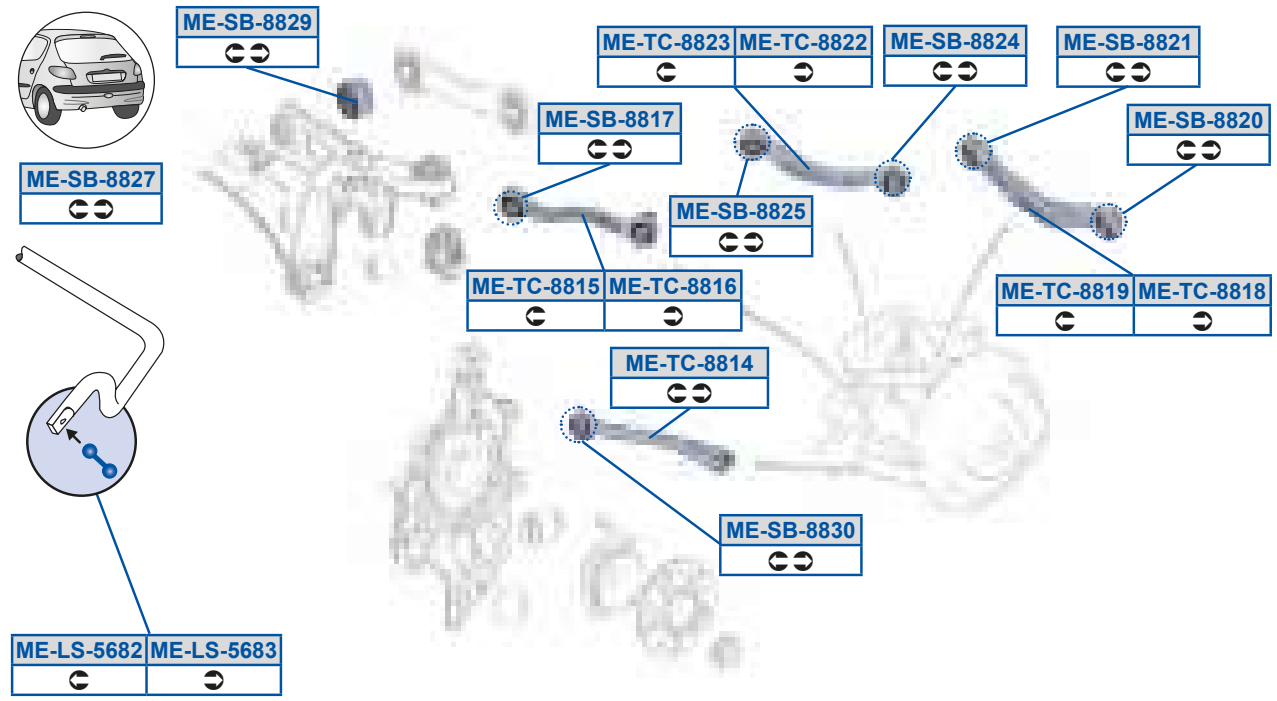
ME-SB-8829
ME-TC-8823
ME-TC-8822
ME-SB-8824
ME-SB-8821
ME-SB-8817
ME-SB-8820
ME-SB-8827
ME-SB-8825
ME-TC-8815
ME-TC-8816
ME-TC-8819
ME-TC-8818
ME-TC-8814
ME-SB-8830
ME-LS-5682
ME-LS-5683

[S5Oi 59CAAE
97EAA77C77

[S5Zd598CA8
97BA9799FG

[S5dP5CDEE
97BAAA7B8B

[S5dP5FFA8
97BAC987DC397BAC987DCD

[S5Oi 5CDEB
97BAAF778C397BAAF7B8C

[S5Zd5CDEF
97BA97AEFG

[S5dP5FF9E
97BAC77CCA /40

[S5eQ59GCG
97AAA77888397AAA78D88

[S5Oi 5EEDG
97BAAF7A8C397BAAF7C8C

[S5Zd5CDEG
97BA97AFFG

[S5dP5FF>8
97BAC78C7D /40

[S5eQ59GD8
97AAA77988397AAA78E88

[S5Sd5CDBF
97BAA77G7A

[S5Zd5CDF8
97BA978EFG

[S5dP5FF>9
97BAC78C7D /40

[S5eQ5CDEC
97BAA7A888397BAA7DE88

[S5Sd5CDBG
97BAA7877A

[S5Zd5CDF9
97BA978FFG

[S5dP5FF>B
97BAC7987D /40

[S5eQ5CDED
97BAA7A988397BAA7DF88

[S5Sd5EEE8
97BAA7AB7A

[S5Zd5CDF>
97BA977CFG

[S5dP5FF>C
97BAC7987D /40

[S5eQ5FF9B
97BAC79E7D

[S5Sd5EEE9
97BAA7AA7A

[S5Zd5CDFA
97BA977BFG

[S5dP5FF>E
97B AC8 7A B9

[S5eQ5FF9C
97BAC77CCA

[S5Zd598C>G
97BA977EFG

[S5dP5CD>E
97AAAA798B397AAAA878B

[S5dP5FF>G
97BAC87BB9

[S5eQ5FF9D
97BAC77DCA

[Sc QSRSd5PS] k

Q5QZOdd 0h ; 8B1	8978E 8979B	Q5QZOdd e5[wx 0d; 8B1	8F78E 8F79B

Q5Qé |>8Bn

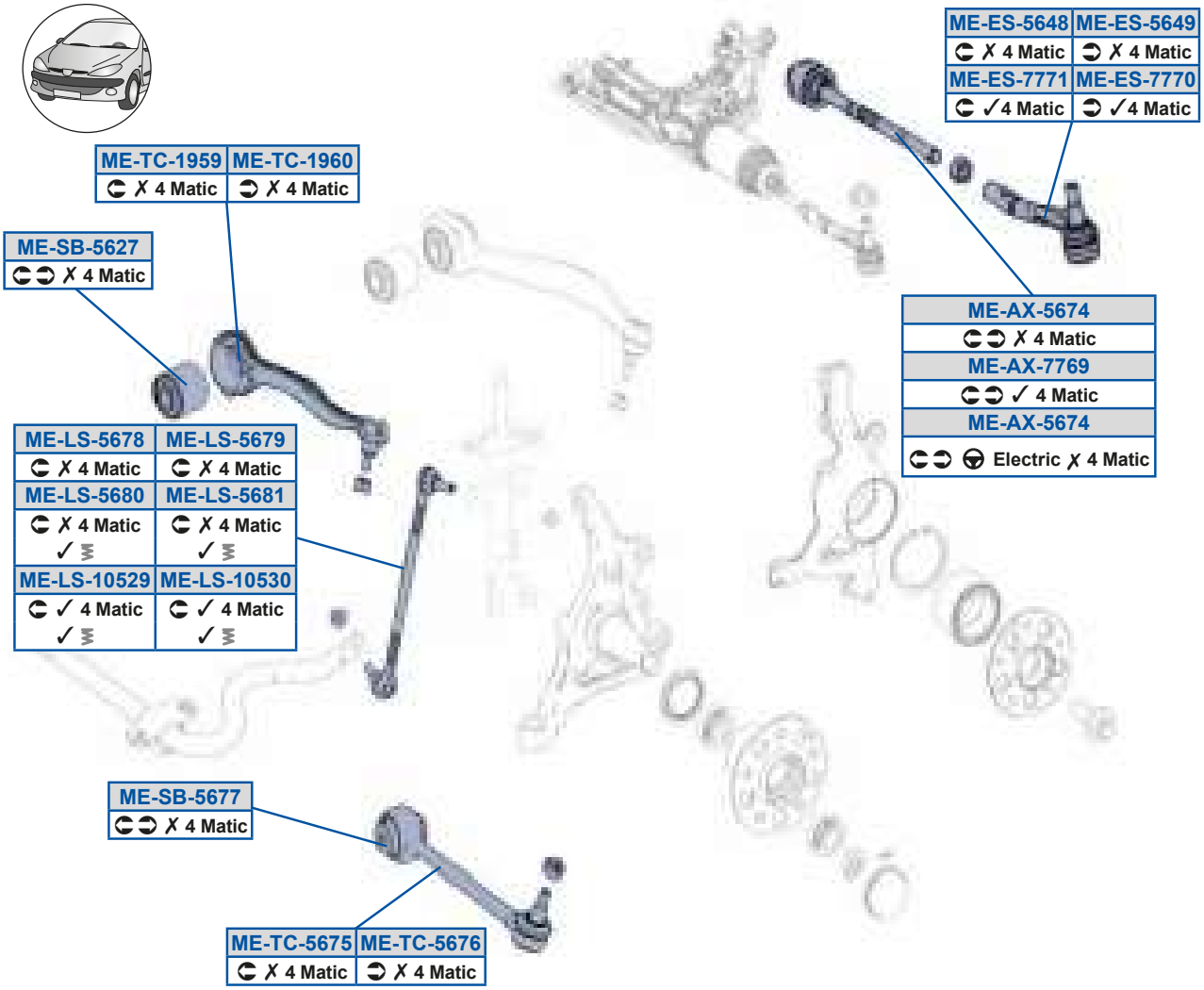

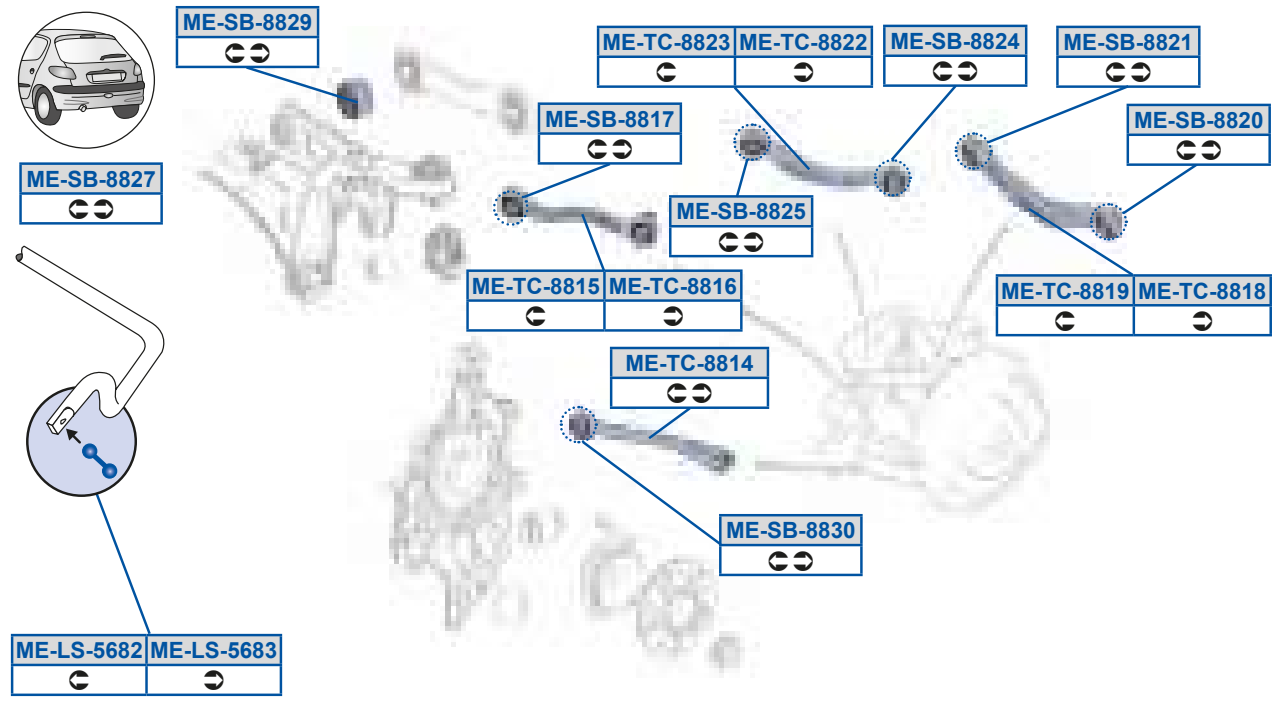

[Sc QSRSd5PS] k

MOOG

[S5eQ5FF9F
97BAC78D7D

[S5eQ5FF9G
97BAC78C7D

[S5eQ5FF>>
97BAC7997D397BAC97ADC

[S5eQ5FF>A
97BAC7987D

[Sc QSRSd5PS] k

Q5QZOdd 0h ; 8C1	9; 79A	Q5QZOdd e5[wx 0d; 8C1	8G79B

✗ 4Matic

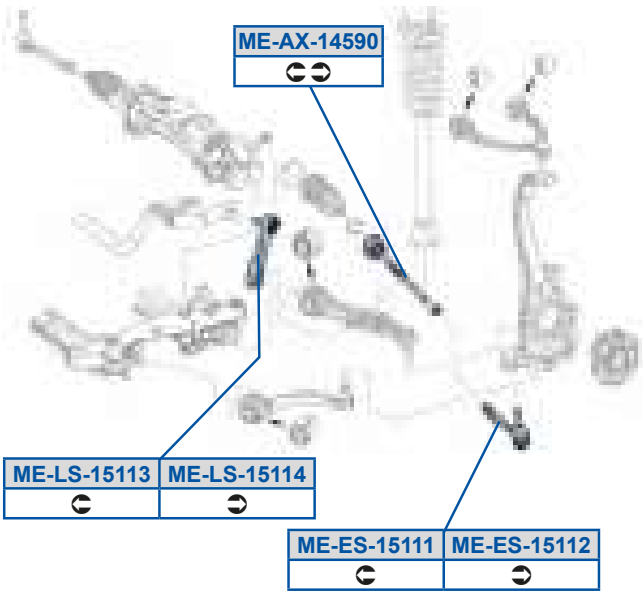

✓ 4Matic

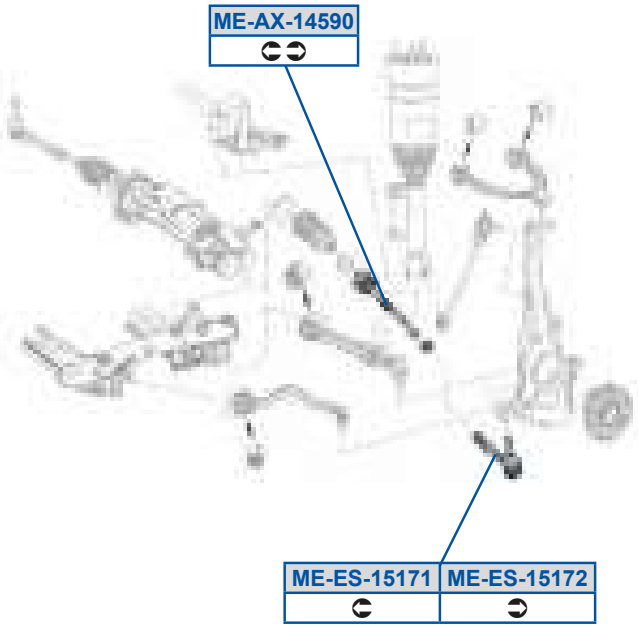

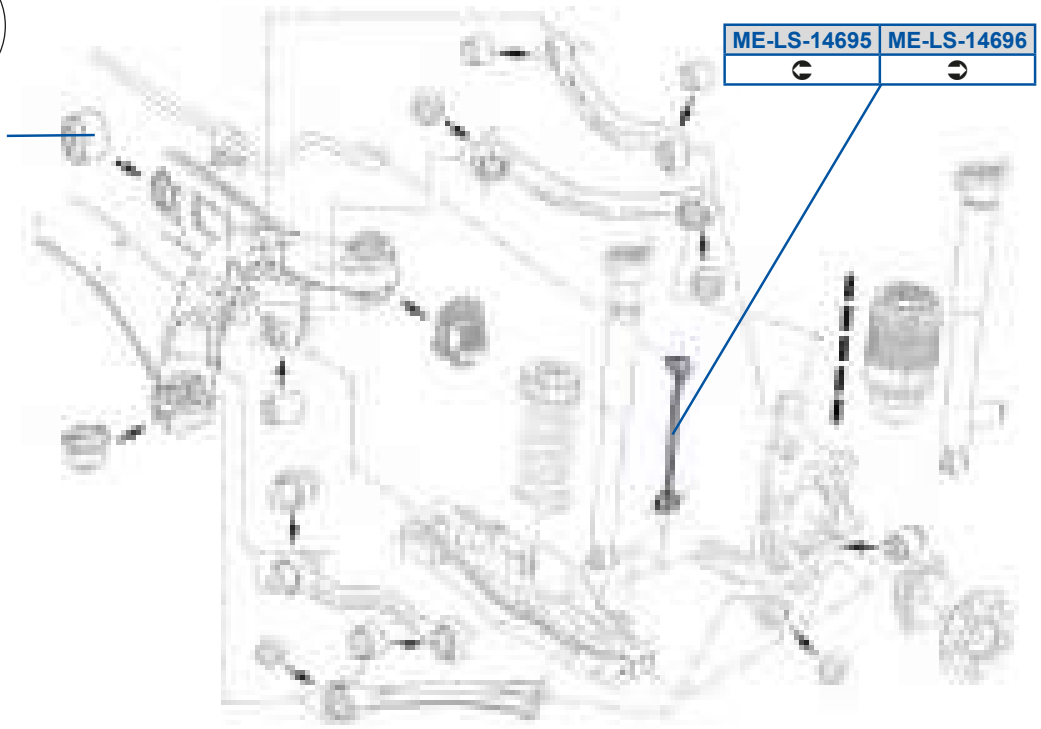

MOOG

[S5Oi 59BCG8
97CBD77F7C

[S5Sd59C999
97CBD77D7C

[S5Sd59C99>
97CBD77E7C

[S5Sd59C9E9
97CBD7777C

[S5Sd59C9E>
97CBD7787C

[S5Zd59BDBC
97CA9D7A8E

[S5Zd59BDBD
97CA9D7B8E

[S5Zd59C99A
97CA9A7E8E

[S5Zd59C99B
97CA9A7F8E

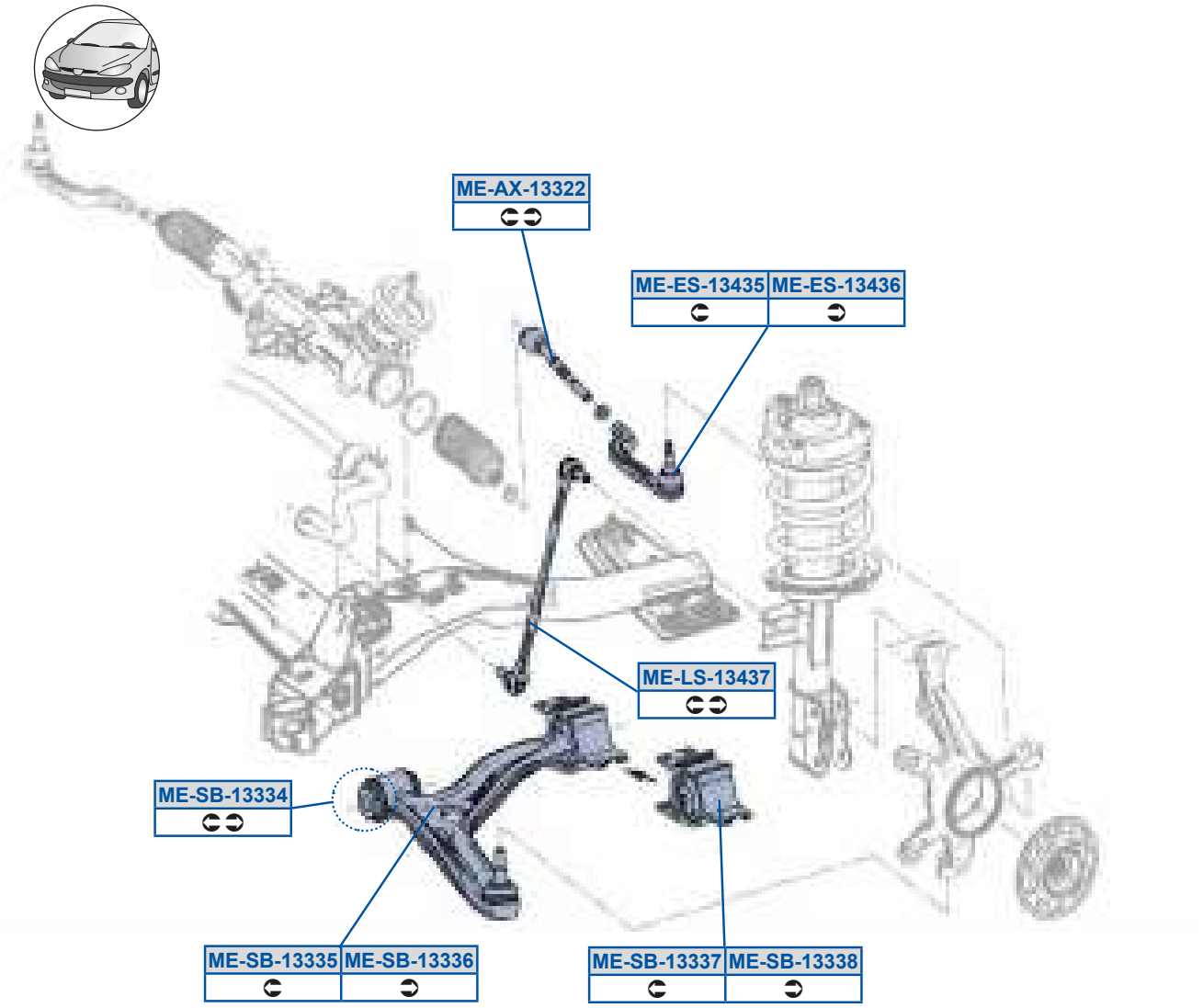
ME-AX-13322
ME-ES-13435
ME-ES-13436
ME-LS-13437
ME-SB-13334
ME-SB-13335
ME-SB-13336
ME-SB-13337
ME-SB-13338

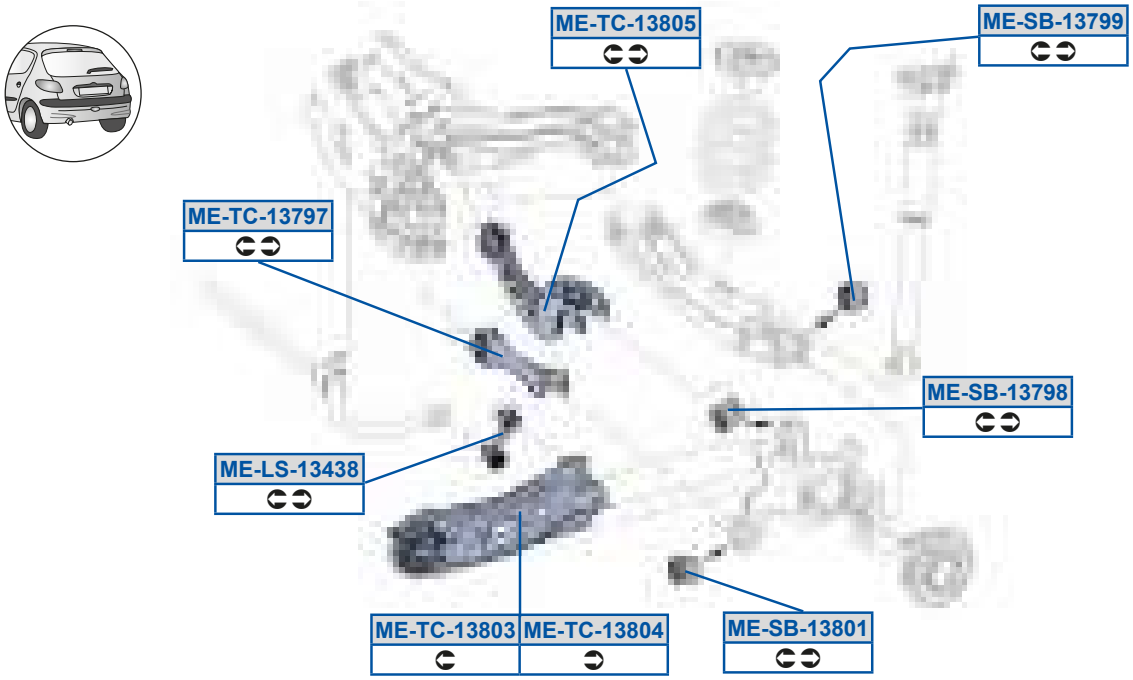
ME-TC-13805
ME-SB-13799
ME-TC-13797
ME-SB-13798
ME-LS-13438
ME-TC-13803
ME-TC-13804
ME-SB-13801

[S5Oi 59AA>>
9BDAAF7777

[S5Sd59ABAC
9BDAA78E77

[S5Sd59ABAD
9BDAA78F77

[S5Zd59ABAE
9BDA977DFG

[S5Zd59ABAF
9BDA977BFG39BDA977EFG

[S5dP59AAAB
9BDAAA788B

[S5dP59AAAE
9BDAAA778B39BDAAA7877

[S5dP59AAAF
9BDAAA797739BDAAA798B

[S5dP59AEGF
9BDAC978DC

[S5dP59AEGG
9BDAC97GDC

[S5dP59AF89
9BDAC979DC

[S5eQ59AAAC
9BDAA78E7E39BDAA7BE77

[S5eQ59AAAD
9BDAA78F7E39BDAA7BF77

[S5eQ59AEGE
9BDAC777CA

[S5eQ59AF8A
9BDAC77B7D

[S5eQ59AF8B
9BDAC77C7D

[S5eQ59AF8C
9BDAC7877D

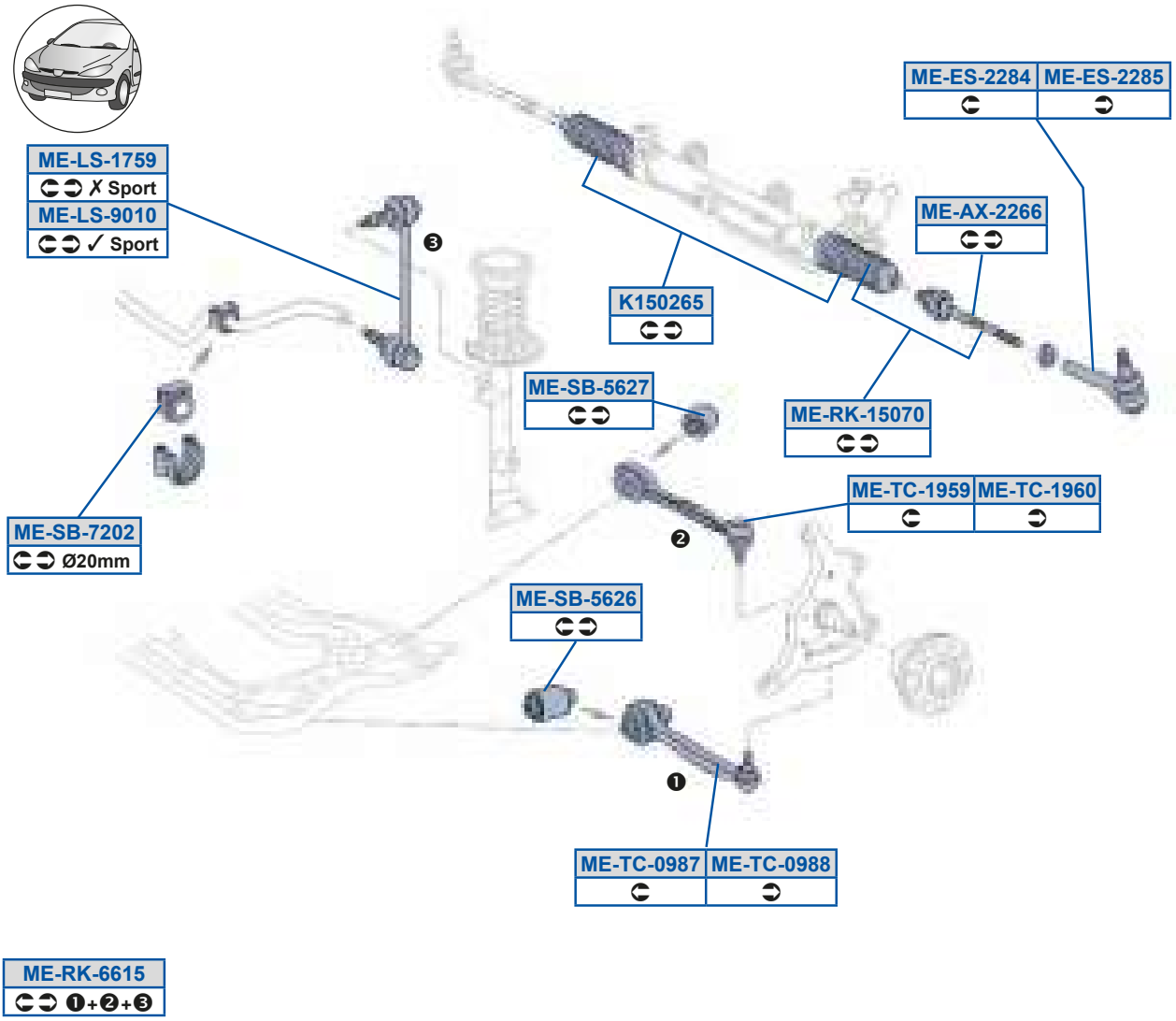
ME-LS-1759
✗ Sport
ME-LS-9010
✓ Sport
ME-ES-2284
ME-ES-2285
ME-AX-2266
K150265
ME-SB-5627
ME-RK-15070
ME-TC-1959
ME-TC-1960
ME-SB-7202
Ø20mm
ME-SB-5626
ME-TC-0987
ME-TC-0988
ME-RK-6615
❶+❷+❸

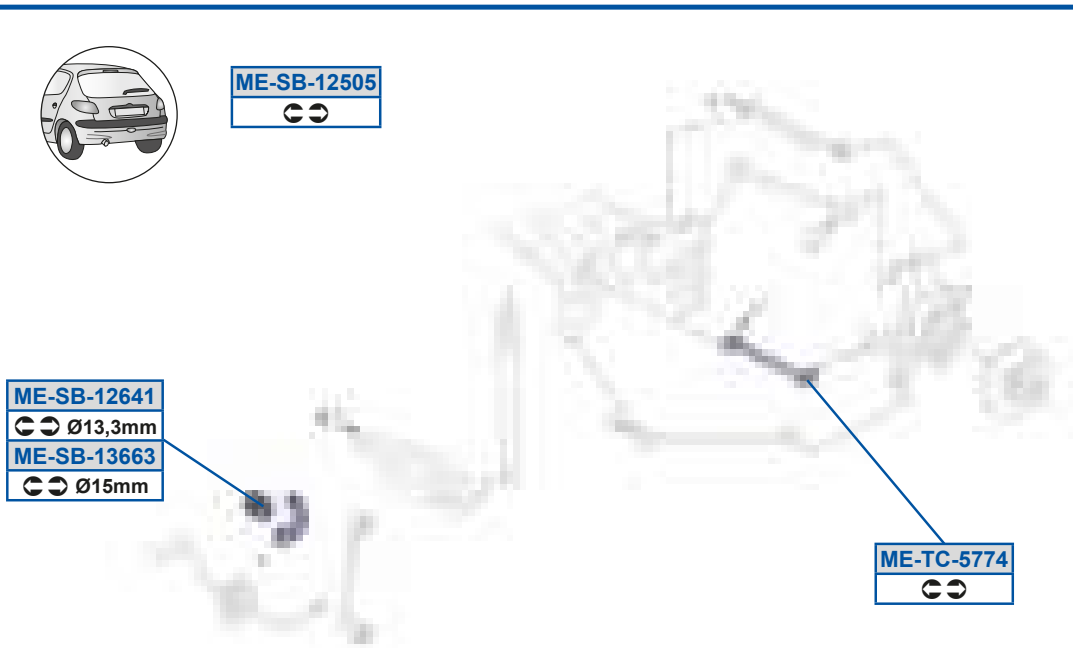
ME-SB-12505
ME-SB-12641
Ø13,3mm
ME-SB-13663
Ø15mm
ME-TC-5774

MOOG

Y9C8>DC
97ABDA79GD

[S5dP59>C8C
8E8AC878B9397AAC87EB9

[S5eQ59GCG
97AAA77888397AAA78D88

[S5Oi 5>>DD
988AA79G7A3988AAF778C

[S5dP59>DB9
97AA9D7AF8

[S5eQ59GD8
97AAA77988397AAA78E88

[S5Sd5>>FB
97AAA78G7A397AAA79A7A

[S5dP59ADDA
97AA9D78F8

[S5eQ5CEEB
97AAC77ACA397AAC77ECA

[S5Sd5>>FC
97AAA7977A397AAA79B7A

[S5dP5CD>D
97AAAA7A8B397AAAA7G8B

[S5Zd59ECG
97AA977BFG397AA979CFG

[S5dP5CD>E
97AAAA798B397AAAA878B

[S5Zd5G898
97AA9798FG397AA979DFG

[S5dP5E>8>
97AA9A7DFC397AA9A97FC

[S5cY59C8E8
988AA79G7A3988AAF778C

[S5eQ58GFE
97AAA78G88397AAA7AA88

[S5cY5DD9C

[S5eQ58GFF
97AAA79788397AAA7AB88

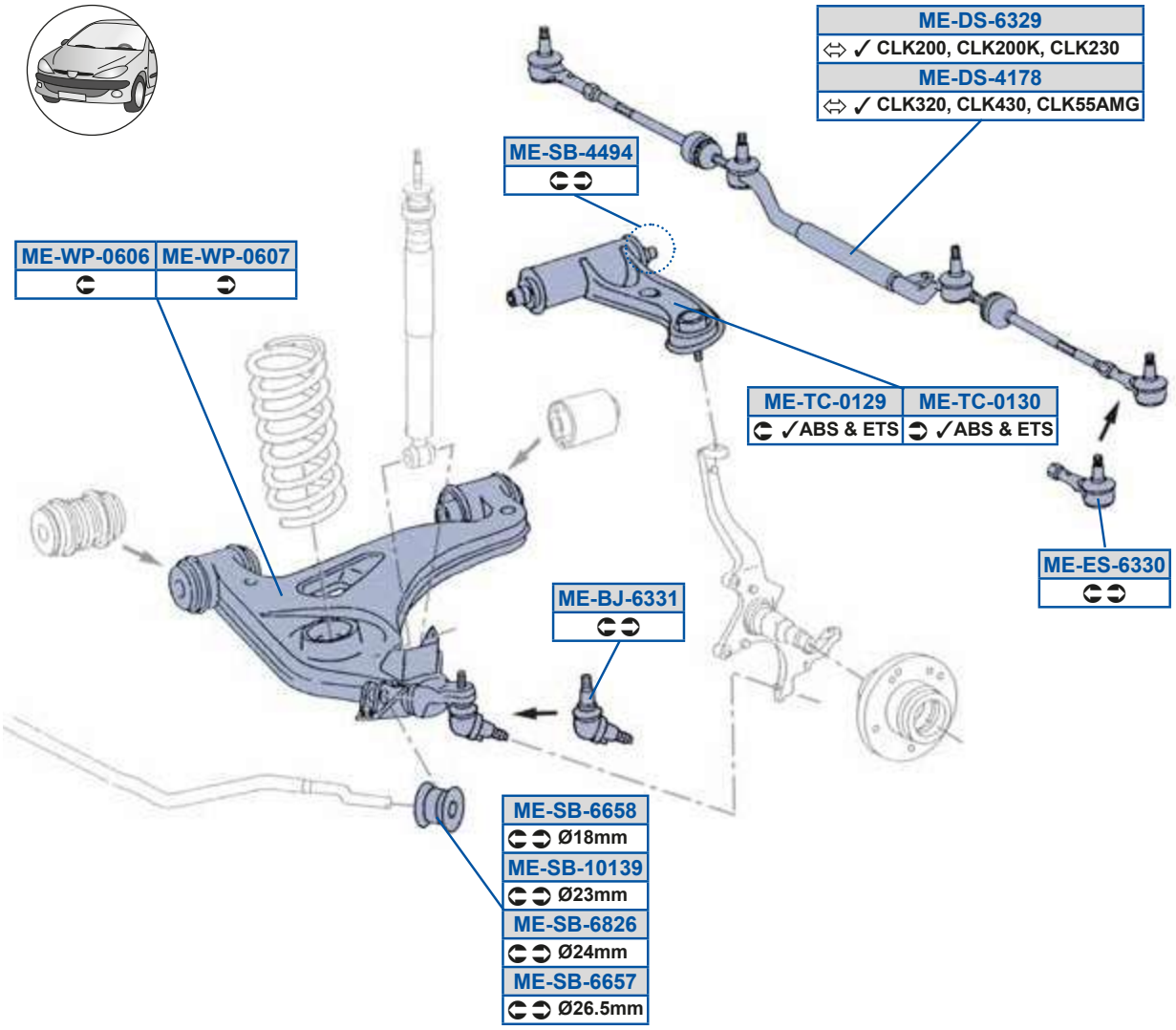
ME-DS-6329
⇔ ✓ CLK200, CLK200K, CLK230
ME-DS-4178
⇔ ✓ CLK320, CLK430, CLK55AMG
ME-SB-4494
ME-WP-0606
ME-WP-0607
ME-TC-0129
✓ABS & ETS
ME-TC-0130
✓ABS & ETS
ME-ES-6330
ME-BJ-6331
ME-SB-6658
Ø18mm
ME-SB-10139
Ø23mm
ME-SB-6826
Ø24mm
ME-SB-6657
Ø26.5mm

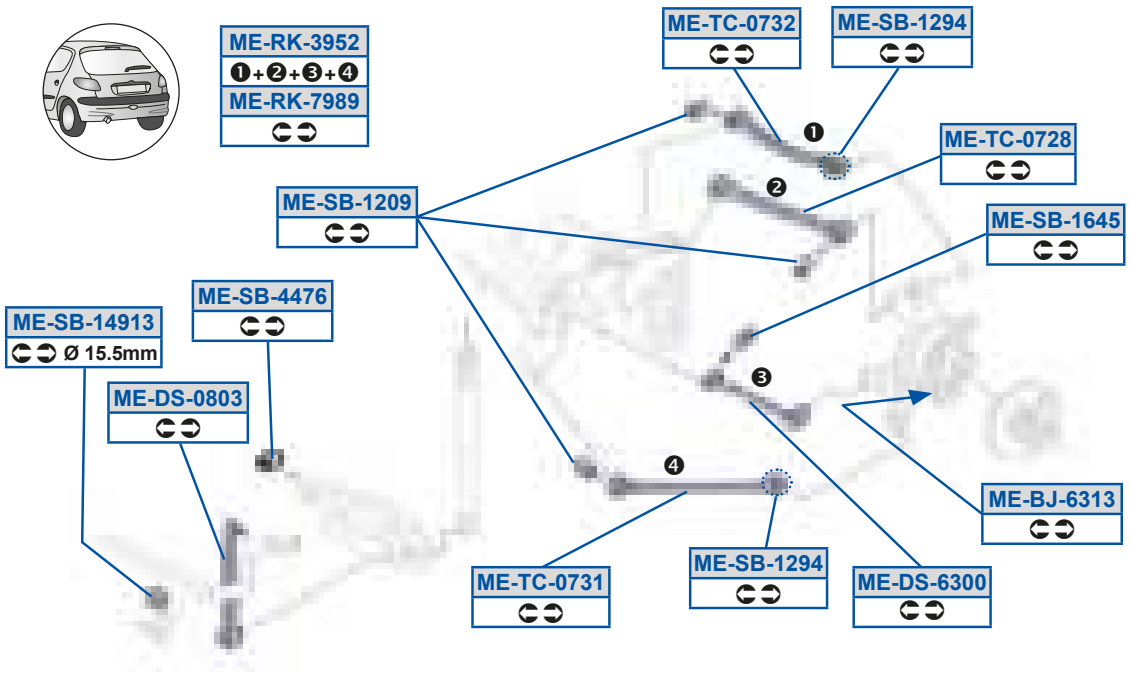
ME-RK-3952
❶+❷+❸+❹
ME-RK-7989
ME-TC-0732
ME-SB-1294
ME-TC-0728
ME-SB-1209
ME-SB-1645
ME-SB-14913
Ø 15.5mm
ME-SB-4476
ME-DS-0803
ME-BJ-6313
ME-TC-0731
ME-SB-1294
ME-DS-6300

[S5PX5DA9A
978AC9779E3997AC9799E

[S5PX5DAA9
979AAA779E3987AA777AC

[S5Rd58F8A
89BA9779FG

[S5Rd5B9EF
979BD77C7C

[S5Rd5DA88
89BAC778CA3978AC79GCA

[S5Rd5DA>G
979BD77B7C

[S5Sd5DAA8
777AA7EBAC3778AA7EBAC

[S5cY5AGC>
987AC7AF7D3987AC7AF7Do8

[S5cY5EGFG
8B7AC77FE738B7AC787E7

[S5dP5989AG
979A9A79FC

[S5dP59>8G
89BAC9ABDC389BAC9G7DC

[S5dP59>GB
89BAC9ACDC

[S5dP59BG9A
89BA9D78F8

[S5dP59DBC
89BAC9BADC3978AC9FEDC

[S5dP5BBED
89BAC9E7DC389BAC9FBDC

[S5dP5BBGB
979AAAEE8B

[S5dP5DDCE
89BA9A9BFC389BA9AB8FC

[S5dP5DDCF
89BA9A9AFC389BA9ABGFC

[S5dP5DF>D
89BA9ACBFC

[S5eQ589>G
979 AA7 A7 7E

[S5eQ589A8
979 AA7 97 7E

[S5eQ58E>F
978AC7BE7D3978AC7CD7D

[S5eQ58EA9
89BAC7789G3987AC7779G

[S5eQ58EA>
89BAC7E77D389BAC7E87D

[S5h a58D8D
8E7AA7787E3979AA79D7E

[S5h a58D8E
8E7AA7797E3979AA79E7E

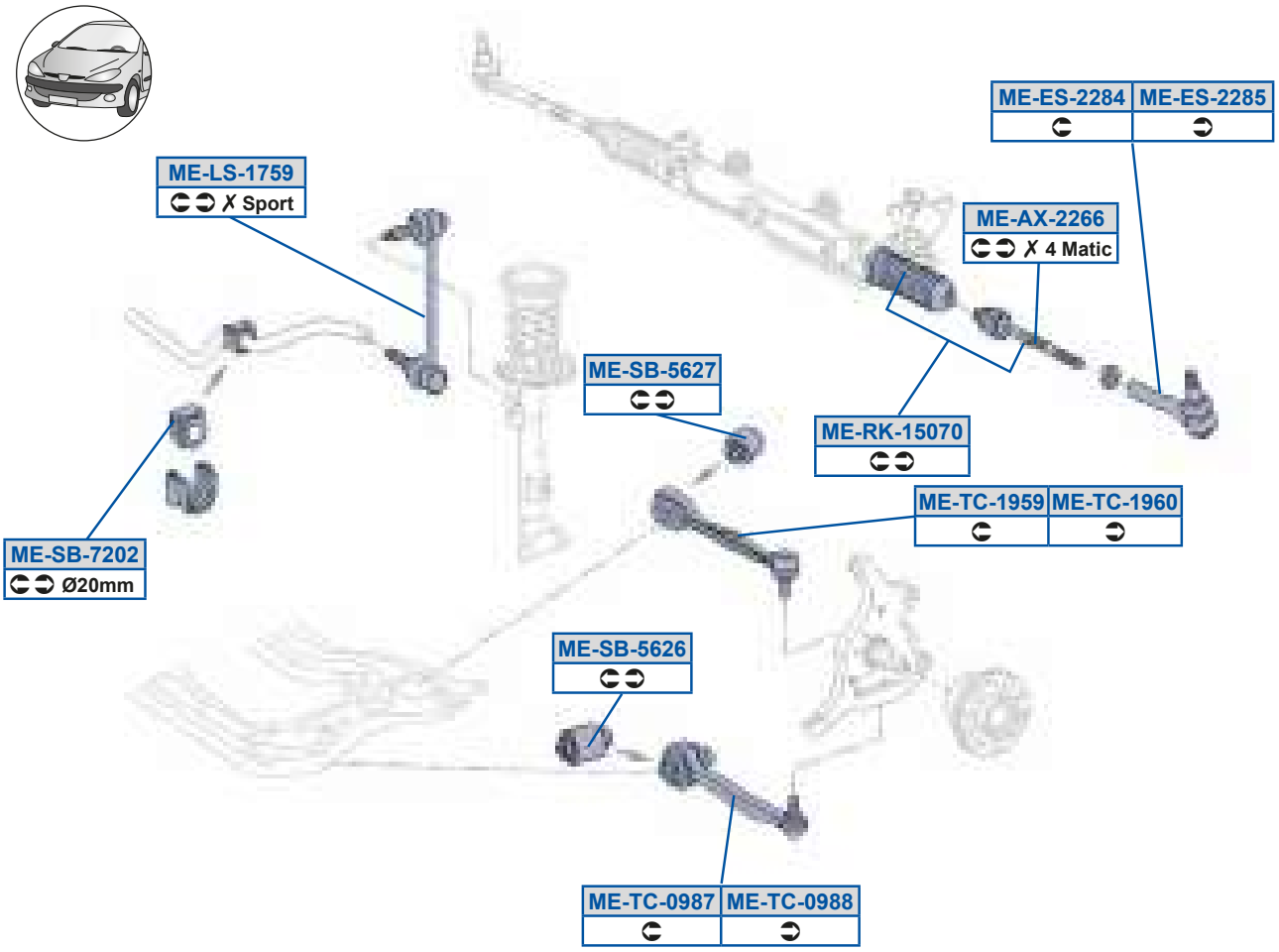
ME-ES-2284
ME-ES-2285
ME-LS-1759
✗ Sport
ME-AX-2266
✗ 4 Matic
ME-SB-5627
ME-RK-15070
ME-TC-1959
ME-TC-1960
ME-SB-7202
Ø20mm
ME-SB-5626
ME-TC-0987
ME-TC-0988

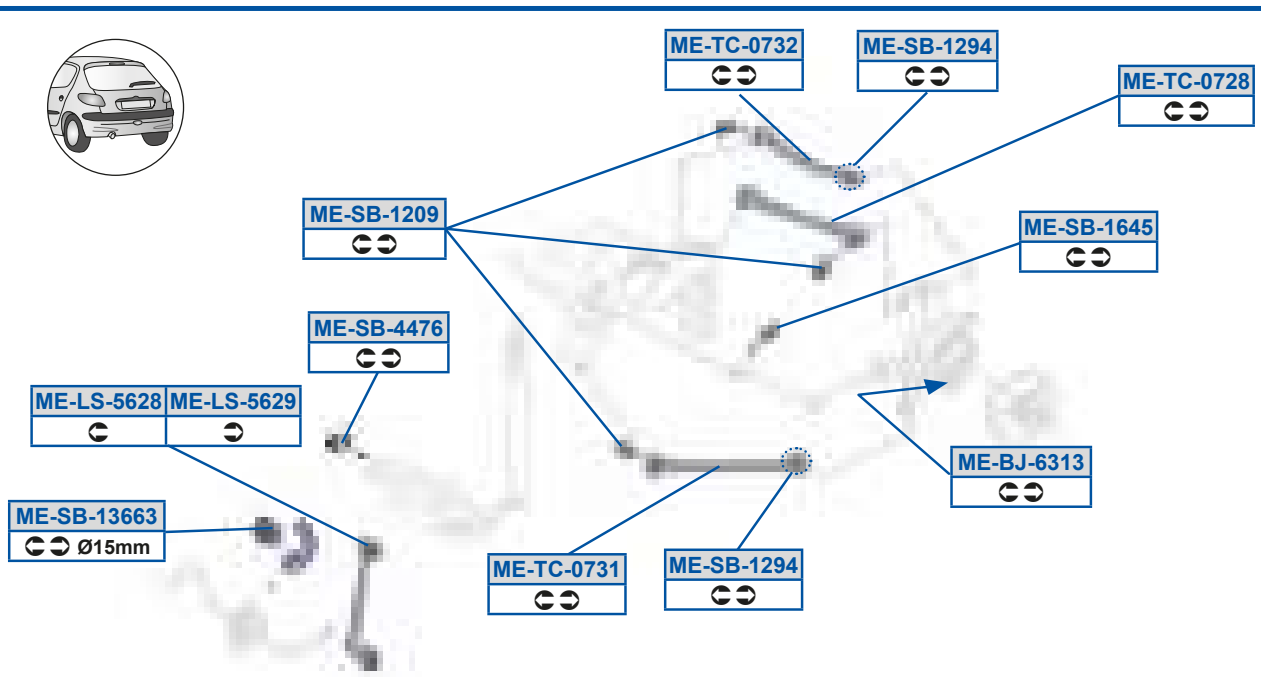
ME-TC-0732
ME-SB-1294
ME-TC-0728
ME-SB-1209
ME-SB-1645
ME-SB-4476
ME-LS-5628
ME-LS-5629
ME-BJ-6313
ME-SB-13663
Ø15mm
ME-TC-0731
ME-SB-1294

[S5Oi 5>>DD
988AA79G7A3988AAF778C

[S5dP59>8G
89BAC9ABDC389BAC9G7DC

[S5eQ58E>F
978AC7BE7D3978AC7CD7D

[S5PX5DA9A
978AC9779E3997AC9799E

[S5dP59>GB
89BAC9ACDC

[S5eQ58EA9
89BAC7789G3987AC7779G

[S5Sd5>>FB
97AAA78G7A397AAA79A7A

[S5dP59ADDA
97AA9D78F8

[S5eQ58EA>
89BAC7E77D389BAC7E87D

[S5Sd5>>FC
97AAA7977A397AAA79B7A

[S5dP59DBC
89BAC9BADC3978AC9FEDC

[S5eQ58GFE
97AAA78G88397AAA7AA88

[S5Zd59ECG
97AA977BFG397AA979CFG

[S5dP5BBED
89BAC9E7DC389BAC9FBDC

[S5eQ58GFF
97AAA79788397AAA7AB88

[S5Zd5CD>F
97AA977EFG

[S5dP5CD>D
97AAAA7A8B397AAAA7G8B

[S5eQ59GCG
97AAA77888397AAA78D88

[S5Zd5CD>G
97AA977FFG

[S5dP5CD>E
97AAAA798B397AAAA878B

[S5eQ59GD8
97AAA77988397AAA78E88

[S5cY59C8E8
988AA79G7A3988AAF778C

[S5dP5E>8>
97AA9A7DFC397AA9A97FC

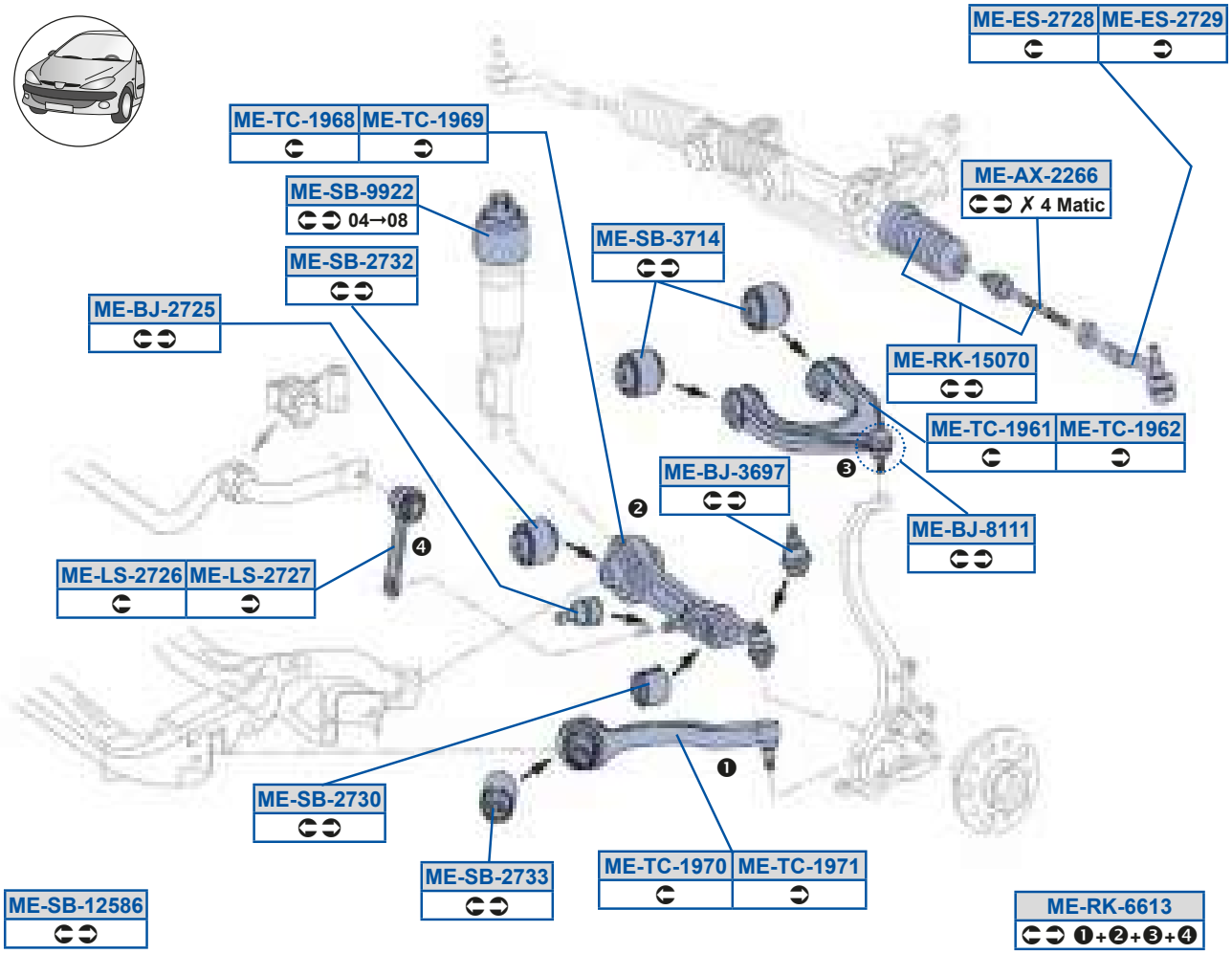
ME-ES-2728
ME-ES-2729
ME-TC-1968
ME-TC-1969
ME-SB-9922
04→08
ME-AX-2266
✗ 4 Matic
ME-SB-3714
ME-SB-2732
ME-BJ-2725
ME-RK-15070
ME-TC-1961
ME-TC-1962
ME-BJ-3697
ME-BJ-8111
ME-LS-2726
ME-LS-2727
ME-SB-2730
ME-SB-2733
ME-TC-1970
ME-TC-1971
ME-SB-12586
ME-RK-6613
❶+❷+❸+❹

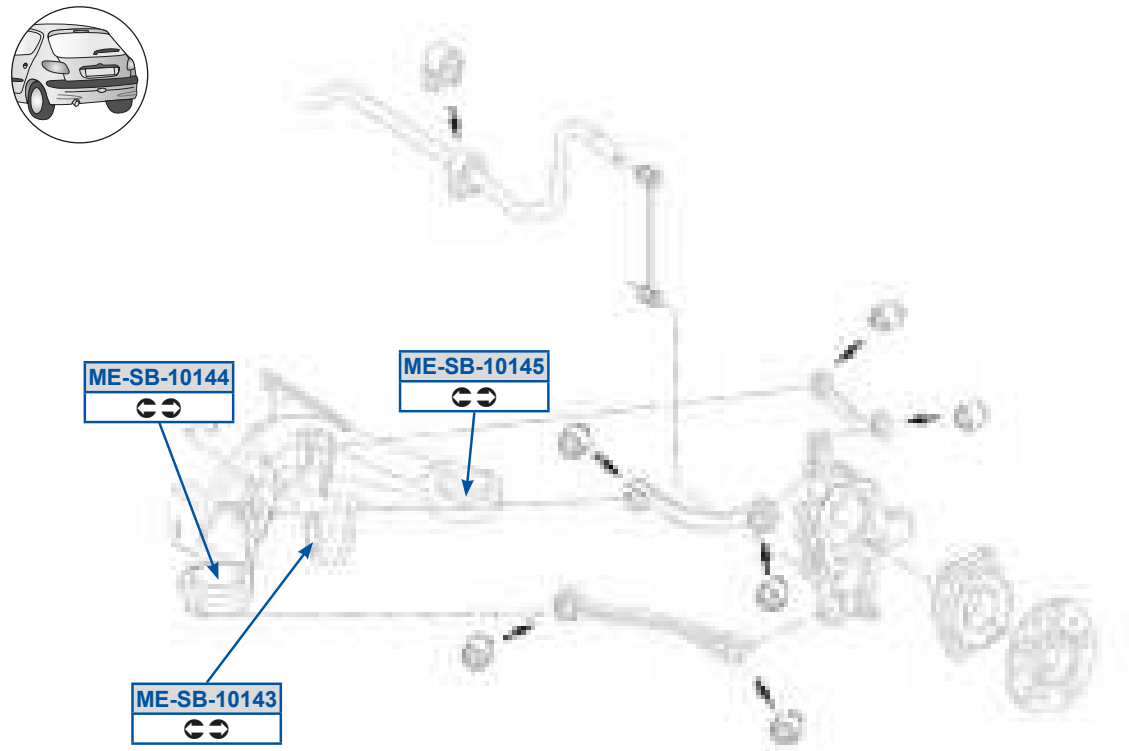
ME-SB-10144
ME-SB-10145
ME-SB-10143

MOOG

[S5Oi 5>>DD
988AA79G7A3988AAF778C

[S5PX5>E>C
988A9A77DF3997A9A7ADF

[S5PX5ADGE
988AA779AC3988AA77BAC

[S5PX5F999
777AA7877E3988AA7GG7E

[S5Sd5>E>F
988AA7787A3988AA79A7A

[S5Sd5>E>G
988AA7797A3988AA79B7A

[S5Zd5>E>D
988A977GFG3988A97AGFG

[S5Zd5>E>E
988A9787FG3988A97AFFG

[S5c Y59C8E8
988AA79G7A3988AAF778C

[S5c Y5DD9A

[S5dP5989BA
997AC979DC3997AC98ADC

[S5dP5989BB
988AC887B93988AC88AB9

[S5dP5989BC
9A7AC879B9

[S5dP59>CFD
988AAA9G8B

[S5dP5>EA8
988AAA8G8B

[S5dP5>EA>
988AAA888B

[S5dP5>EAA
988AAA878B3988AAA9C8B

[S5dP5AE9B
988AAA7F8B

[S5dP5GG>>
988A97779D

[S5eQ59GD9
988AA778AF3988AA7BA7E

[S5eQ59GD>
988AA7BB7E3988AA7DF7E

[S5eQ59GDF
988AA7F87E3988AA7G87E

[S5eQ59GDG
988AA7F97E3988AA7G97E

[S5eQ59GE8
988AA788883988AA78C88

[S5eQ59GE9
988AA789883988AA78D88

QOPc WZSe 0Q9; B1	8G7G9	8D7GA	Q_f aS 0Q9; B1	8A7FE	8C7GA
S5QZOdd 0h 9; B1	8D7GA	9; 7GC	S5QZOdd Q x éu x 0Q9; B1	8C7GA	8A7GF
S5QZOdd Q x 0Q9; B1	8D7GA	8D7GE	S5QZOdd e5[wx 0d9; B1	8D7GA	8D7GD
Y_[PWe5[wx 0d9; B1	8G7FC	8D7GA	dOZ__] 0h 9; B1	9; 7FB	8D7GA

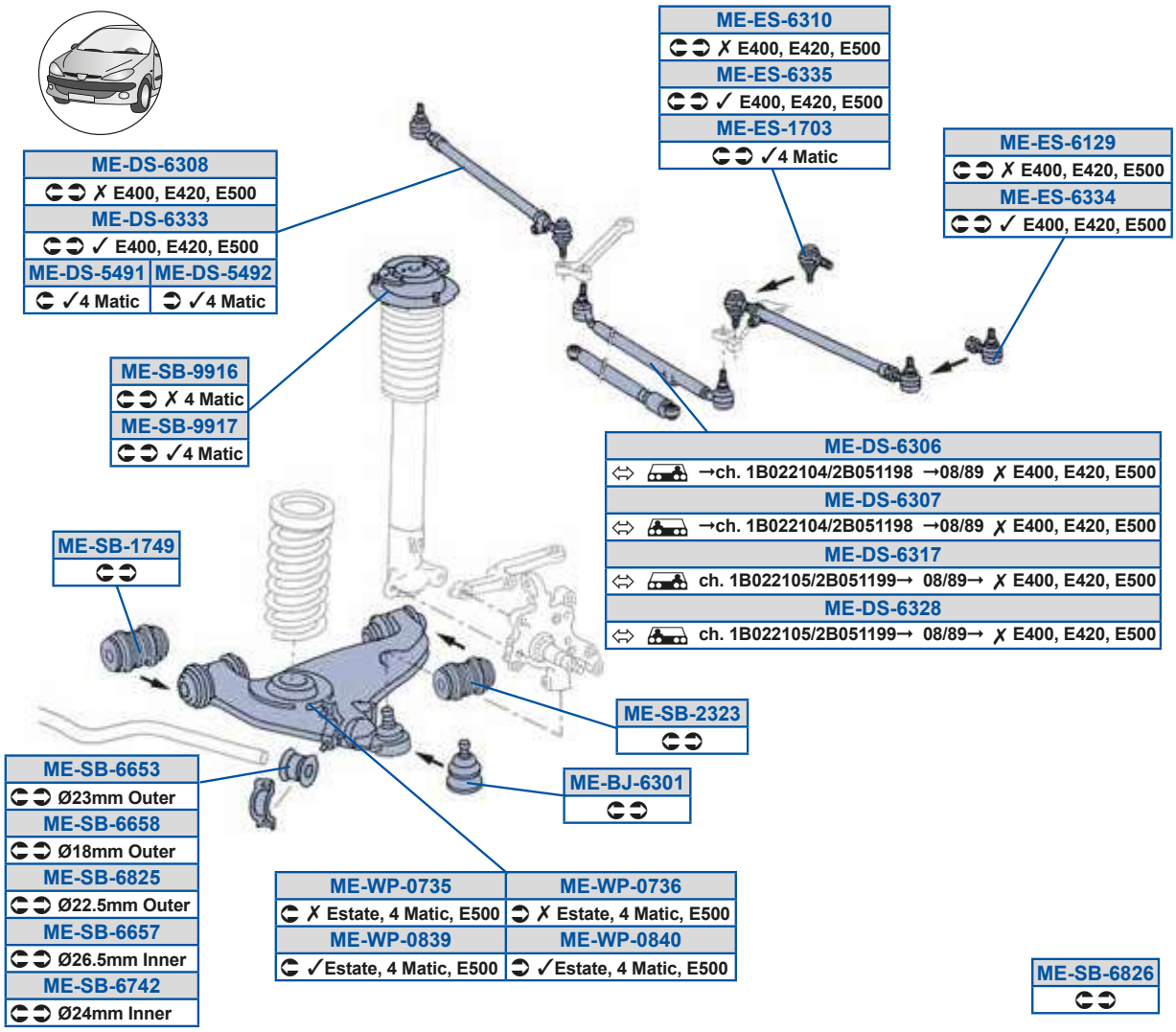

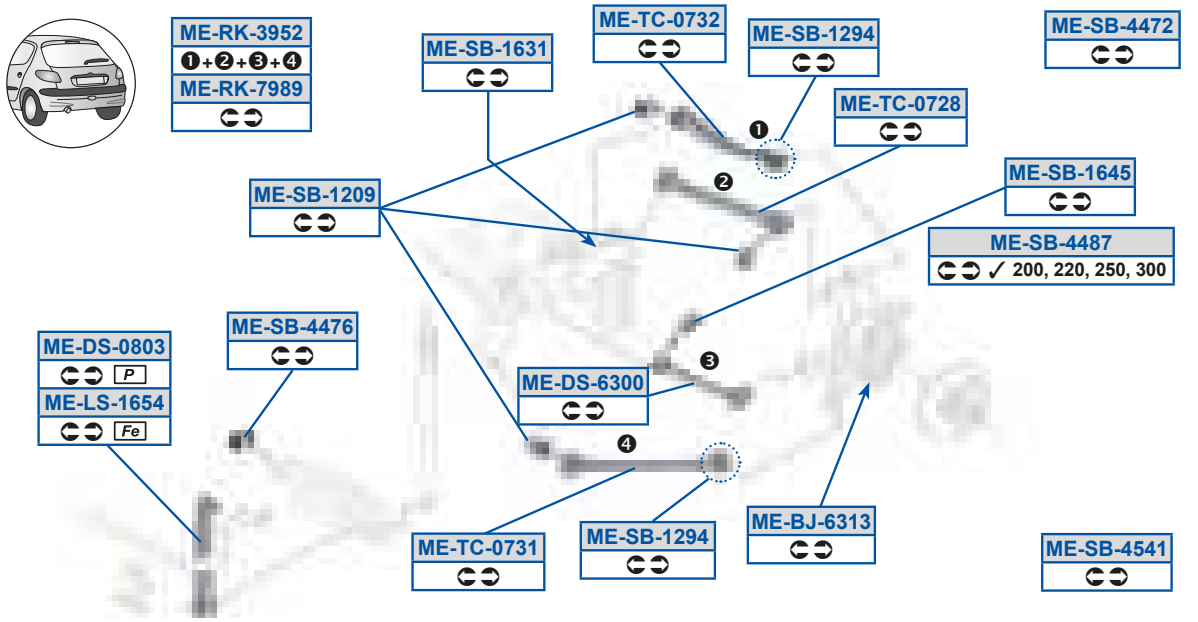

[S5PX5DA89
89BAAA789E389BAAA7A9E

[S5Rd5DAAA
89GAA77A7A

[S5cY5EGFG
8B7AC77FE738B7AC787E7

[S5dP5BBED
89BAC9E7DC389BAC9FBDC

[S5PX5DA9A
978AC9779E3997AC9799E

[S5Sd59E8A
778AA7B7AC3778AA7B8AC

[S5dP59>8G
89BAC9ABDC389BAC9G7DC

[S5dP5BBFE
978AC8ADB9

[S5Rd58F8A
89BA9779FG

[S5Sd5D9>G
777AAFC8873AAFBE87

[S5dP59>GB
89BAC9ACDC

[S5dP5BCB9
89BAC77AB8389BAC7DB7F

[S5Rd5CBG9
89BAA78B7A

[S5Sd5DA98
AAFCD873AAFCG87

[S5dP59DA9
89BAC879B9

[S5dP5DDCA
978A9ABFFC3978A9ABGFC

[S5Rd5CBG>
89BAA78C7A

[S5Sd5DAAB
778AA7CBAC38AA7CBAC

[S5dP59DBC
89BAC9BADC3978AC9FEDC

[S5dP5DDCE
89BA9A9BFC389BA9AB8FC

[S5Rd5DA88
89BAC778CA3978AC79GCA

[S5Sd5DAAC
778AA7CCAC38AA7CCAC

[S5dP59EBG
89BAAAB98B

[S5dP5DDCF
89BA9A9AFC389BA9ABGFC

[S5Rd5DA8F
89BAA77F7A389BAA77G7A

[S5Zd59DCB
89BA977BFG

[S5dP5>A>A
89BAAABA8B

[S5dP5DEB>
89BA9A8EFC389BA9AAEFC

[S5Rd5DA9E
89BBD7897C

[S5cY5AGC>
987AC7AF7D3987AC7AF7Do8

[S5dP5BBE>
89BAC9EEDC

[S5dP5DF>C
89BA9A9EFC389BA9AC7FC

[Sc QSRSd5PS] k

QOPc WZSe 0Q9; B1	8G7G9	8D7GA	Q_f aS 0Q9; B1	8A7FE	8C7GA
S5QZOdd 0h 9; B1	8D7GA	9; 7GC	S5QZOdd Q x éu x 0Q9; B1	8C7GA	8A7GF
S5QZOdd Q x 0Q9; B1	8D7GA	8D7GE	S5QZOdd e5[wx 0d9; B1	8D7GA	8D7GD
Y_[PWe5[wx 0d9; B1	8G7FC	8D7GA	dOZ__] 0h 9; B1	9; 7FB	8D7GA

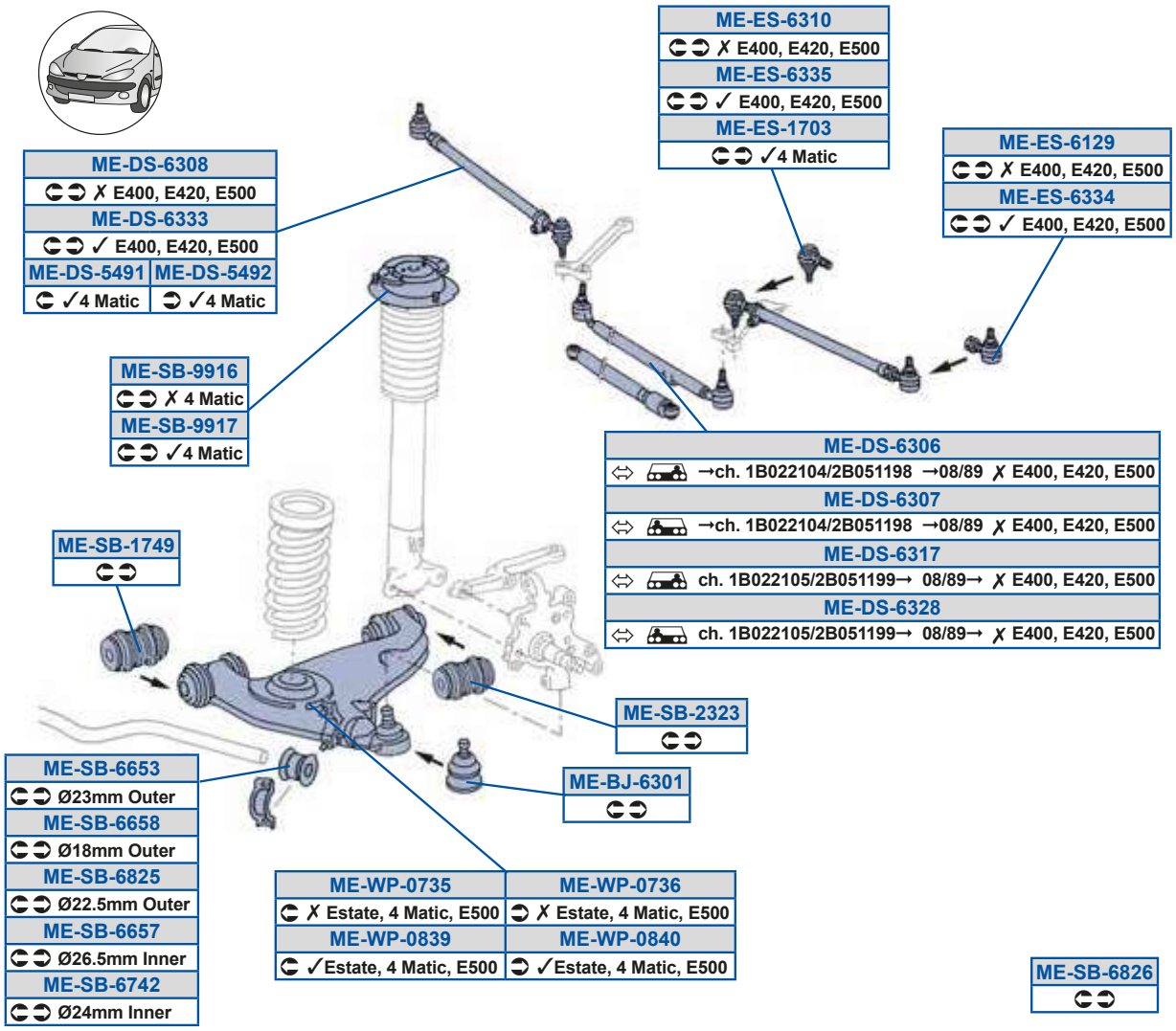

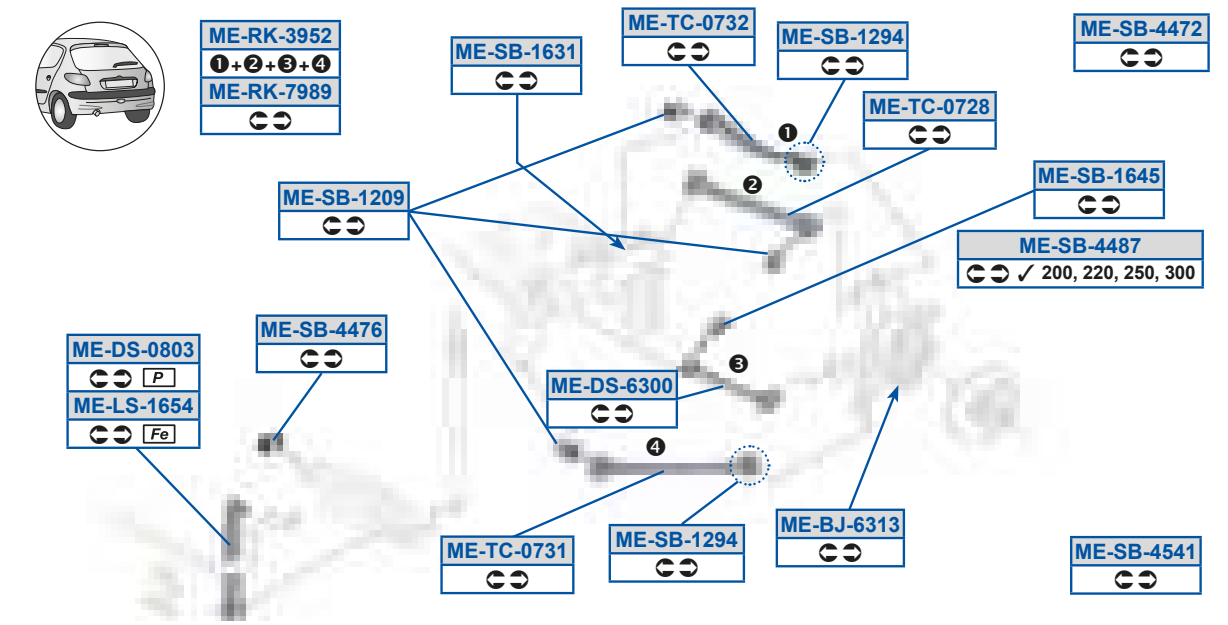

[S5dP5DF>D
89BA9ACBFC

[S5dP5GG9D
978A977EBB3978A979BBB

[S5dP5GG9E
978A977EBB3978A979BBB

[S5eQ58E>F
978AC7BE7D3978AC7CD7D

[S5eQ58EA9
89BAC7789G3987AC7779G

[S5eQ58EA>
89BAC7E77D389BAC7E87D

[S5h a58EAC
89BAA7A77E

[S5h a58EAD
89BAA7A87E

[S5h a58FAG
89BAA7AB7E

[S5h a58FB8
89BAA7AC7E

[Sc QSRSd5PS] k

S5QZOdd 0h ; 981	8D7GC 8A78;	S5QZOdd e5[wx 0d; 981	8D7GD 8A78A

S5Qé I>98n

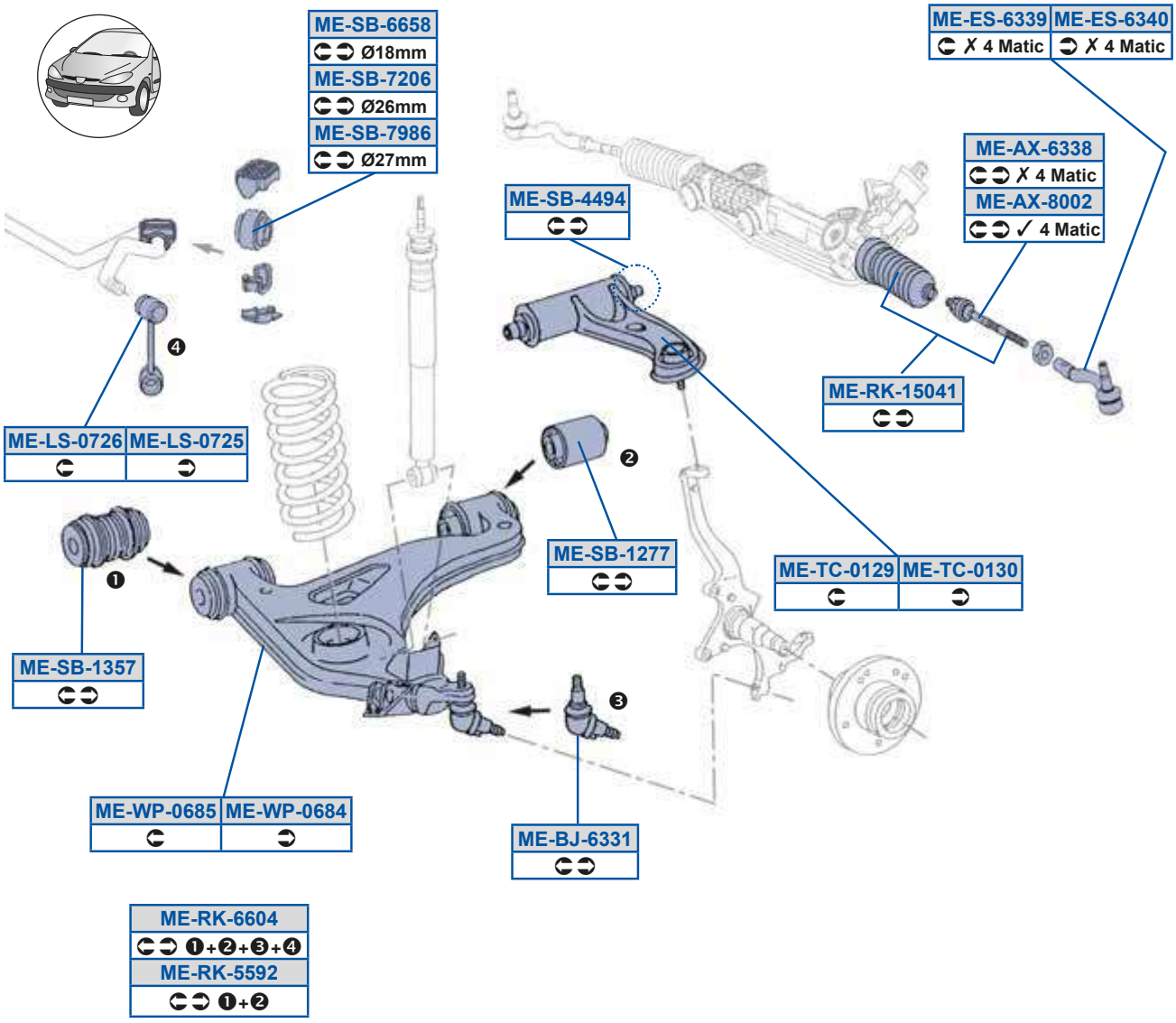

[Sc QSRSd5PS] k

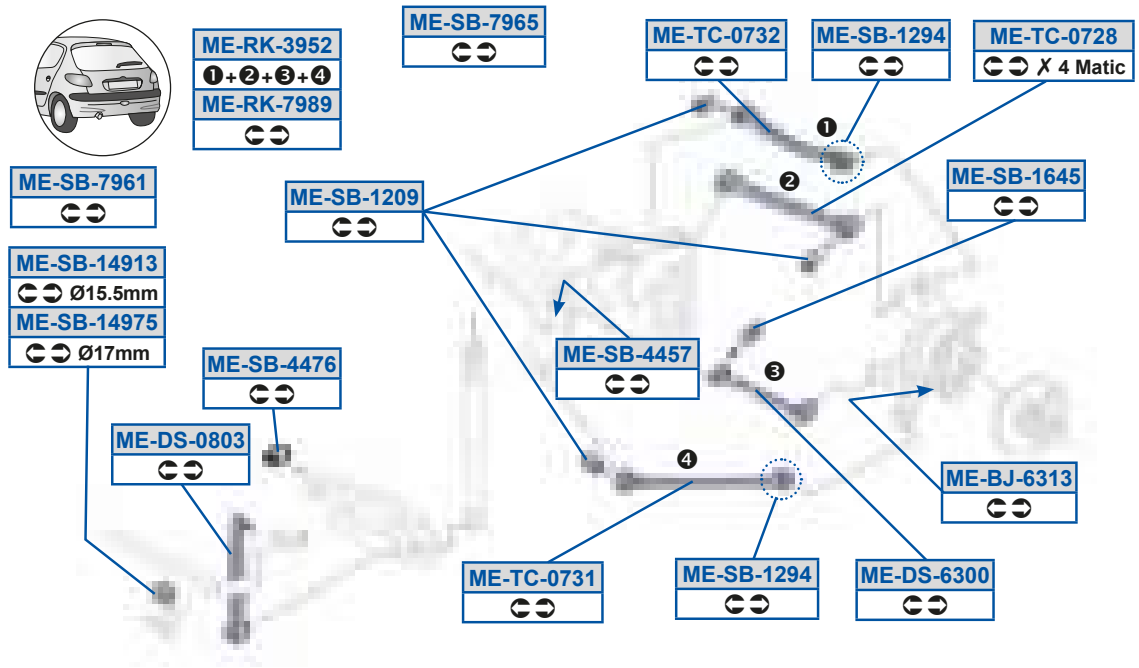

MOOG

[S5Oi 5DAAF
987AAF7B8C

[S5Zd58E>C
987A9799FG3987A97AEFG

[S5dP59>EE
987AAAD78B3987AAADF8B

[S5dP5BBGB
979AAAEE8B

[S5Oi 5F88>
987AAF888C

[S5Zd58E>D
987A9798FG3987A9799FG

[S5dP59>GB
89BAC9ACDC

[S5dP5DDCF
89BA9A9AFC389BA9ABGFC

[S5PX5DA9A
978AC9779E3997AC9799E

[S5cY59C8B9
987AAF7B8C

[S5dP59ACE
987AAACC8B

[S5dP5E>8D
987A9A8BFC

[S5PX5DAA9
979AAA779E3987AA777AC

[S5cY5AGC>
987AC7AF7D3987AC7AF7Do8

[S5dP59BG9A
89BA9D78F8

[S5dP5EGD9
987AC87CB9

[S5Rd58F8A
89BA9779FG

[S5cY5CCG>

[S5dP59BGEC
978A9D8CF8

[S5dP5EGDC
89GAC898B9

[S5Rd5DA88
89BAC778CA3978AC79GCA

[S5cY5DD8B
987AA778EC3987AA77BEC

[S5dP59DBC
89BAC9BADC3978AC9FEDC

[S5dP5EGFD
8B7A9A8GFC

[S5Sd5DAAG
987AAF7C8C

[S5cY5EGFG
8B7AC77FE738B7AC787E7

[S5dP5BBCE
987AC87FB9

[S5eQ589>G
979 AA7 A7 7E

[S5Sd5DAB8
987AAF7D8C

[S5dP59>8G
89BAC9ABDC389BAC9G7DC

[S5dP5BBED
89BAC9E7DC389BAC9FBDC

[S5eQ589A8
979 AA7 97 7E

[Sc QSRSd5PS] k

S5QZOdd 0h ; 981	8D7GC 8A78;	S5QZOdd e5[wx 0d; 981	8D7GD 8A78A

S5Qd# l>98n

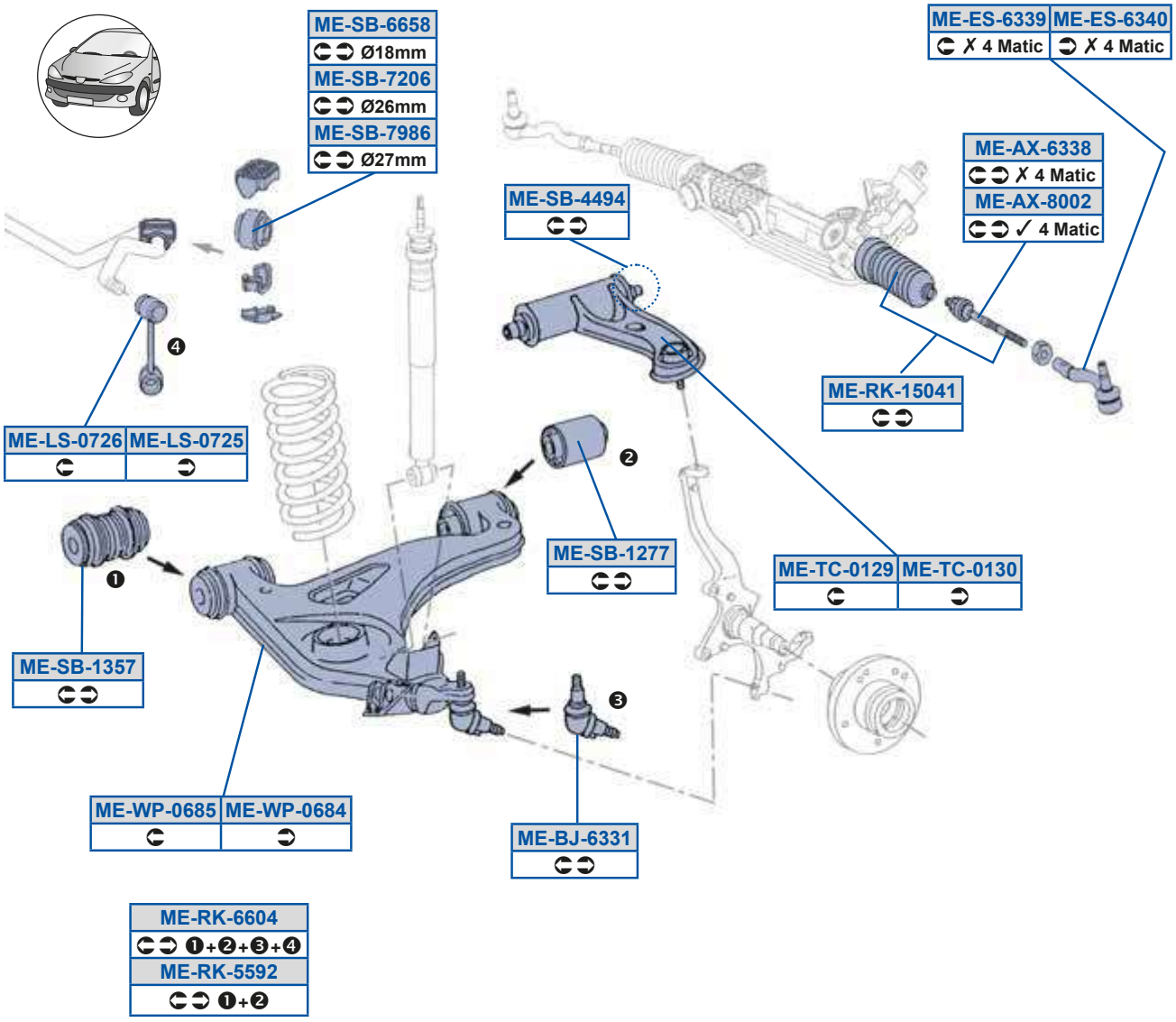

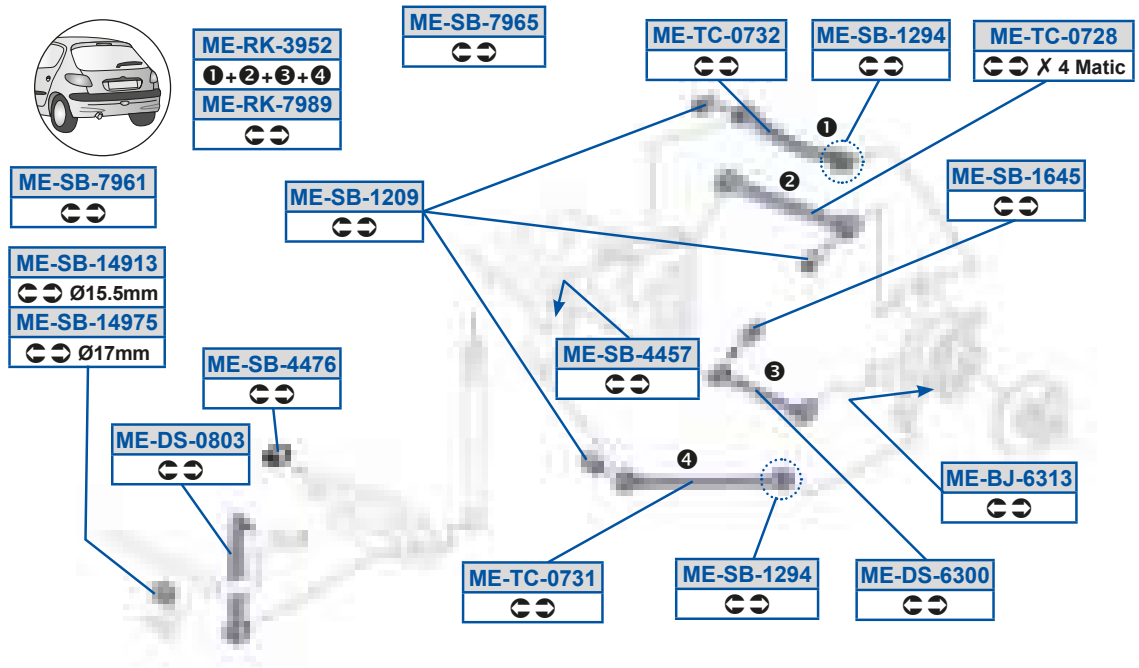

[Sc QSRSd5PS] k

MOOG

[S5eQ58E>F

978AC7BE7D3978AC7CD7D

[S5eQ58EA9

89BAC7789G3987AC7779G

[S5eQ58EA>

89BAC7E77D389BAC7E87D

[S5h a58DFB

987AA7AC7E3987AA7BC7E

[S5h a58DFC

987AA7AB7E3987AA7D87E

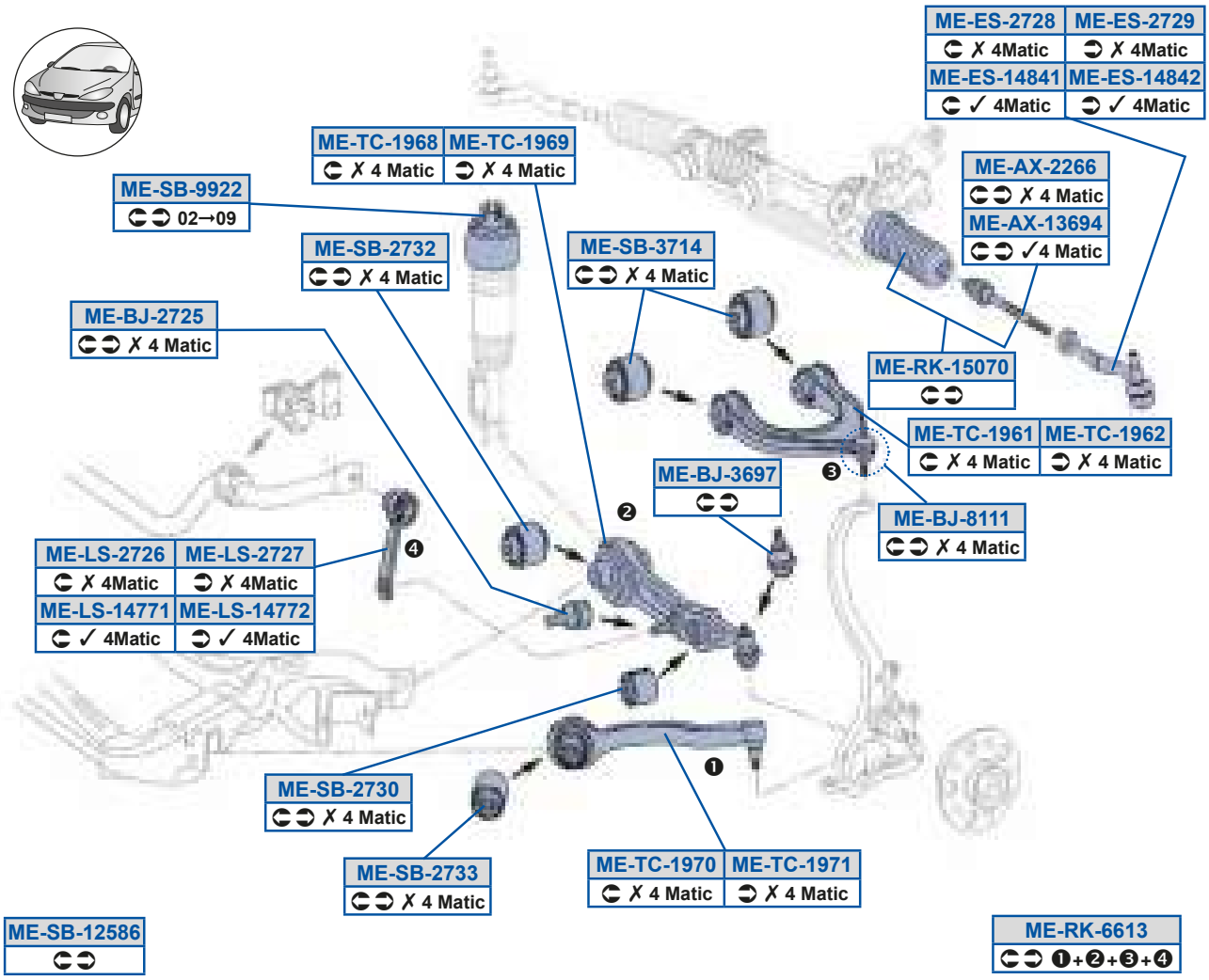
ME-ES-2728
✗ 4Matic
ME-ES-2729
✗ 4Matic
ME-ES-14841
✓ 4Matic
ME-ES-14842
✓ 4Matic
ME-TC-1968
✗ 4 Matic
ME-TC-1969
✗ 4 Matic
ME-SB-9922
02→09
ME-AX-2266
✗ 4 Matic
ME-AX-13694
✓4 Matic
ME-SB-2732
✗ 4 Matic
ME-SB-3714
✗ 4 Matic
ME-BJ-2725
✗ 4 Matic
ME-RK-15070
ME-TC-1961
✗ 4 Matic
ME-TC-1962
✗ 4 Matic
ME-BJ-3697
ME-BJ-8111
✗ 4 Matic
ME-LS-2726
✗ 4Matic
ME-LS-2727
✗ 4Matic
ME-LS-14771
✓ 4Matic
ME-LS-14772
✓ 4Matic
ME-SB-2730
✗ 4 Matic
ME-SB-2733
✗ 4 Matic
ME-TC-1970
✗ 4 Matic
ME-TC-1971
✗ 4 Matic
ME-SB-12586
ME-RK-6613
❶+❷+❸+❹

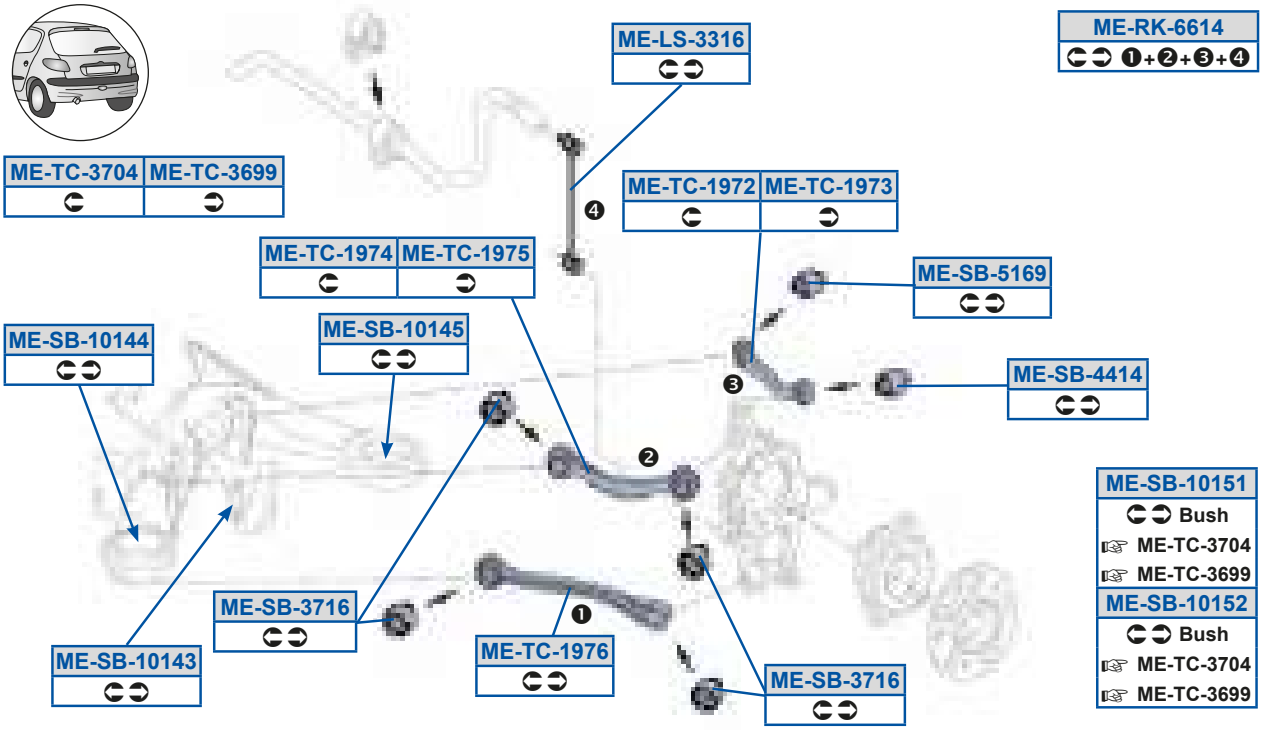
ME-RK-6614
❶+❷+❸+❹
ME-LS-3316
ME-TC-3704
ME-TC-3699
ME-TC-1972
ME-TC-1973
ME-TC-1974
ME-TC-1975
ME-SB-5169
ME-SB-10144
ME-SB-10145
ME-SB-4414
ME-SB-10151
Bush
ME-TC-3704
ME-TC-3699
ME-SB-10152
Bush
ME-TC-3704
ME-TC-3699
ME-SB-3716
ME-SB-10143
ME-TC-1976
ME-SB-3716

MOOG

[S5Oi 59ADGB
988AA79G7A3988AAF778C

[S5Oi 5>>DD
988AA79G7A3988AAF778C

[S5PX5>E>C
988A9A77DF3997A9A7ADF

[S5PX5ADGE
988AA779AC3988AA77BAC

[S5PX5F999
777AA7877E3988AA7GG7E

[S5Sd59BFB9
997AAF8A8C

[S5Sd59BFB>
997AAF8B8C

[S5Sd5>E>F
988AA7787A3988AA79A7A

[S5Sd5>E>G
988AA7797A3988AA79B7A

[S5Zd59BEE9
988A97BEFG

[S5Zd59BEE>
988A97BFFG

[S5Zd5>E>D
988A977GFG3988A97AGFG

[S5Zd5>E>E
988A9787FG3988A97AFFG

[S5Zd5AA9D
988A977FFG3988A97AAFG

[S5c Y59C8E8
988AA79G7A3988AAF778C

[S5c Y5DD9A

[S5c Y5DD9B

[S5dP5989BA
997AC979DC3997AC98ADC

[S5dP5989BB
988AC887B93988AC88AB9

[S5dP5989BC
9A7AC879B9

[S5dP5989C9
9A7AC77A9G /40

[S5dP5989C>
9A7AC77A9G /40

[S5dP59>CFD
988AAA9G8B

[S5dP5>EA8
988AAA8G8B

[S5dP5>EA>
988AAA888B

[S5dP5>EAA
988AAA878B3988AAA9C8B

[S5dP5AE9B
988AAA7F8B

[S5dP5AE9D
97BACA77BA397CAC97C7F

[S5dP5BB9B
988AC97FDC

[S5dP5C9DG
997AC9779E

[S5dP5GG>>
988A97779D

[S5eQ59GD9
988AA778AF3988AA7BA7E

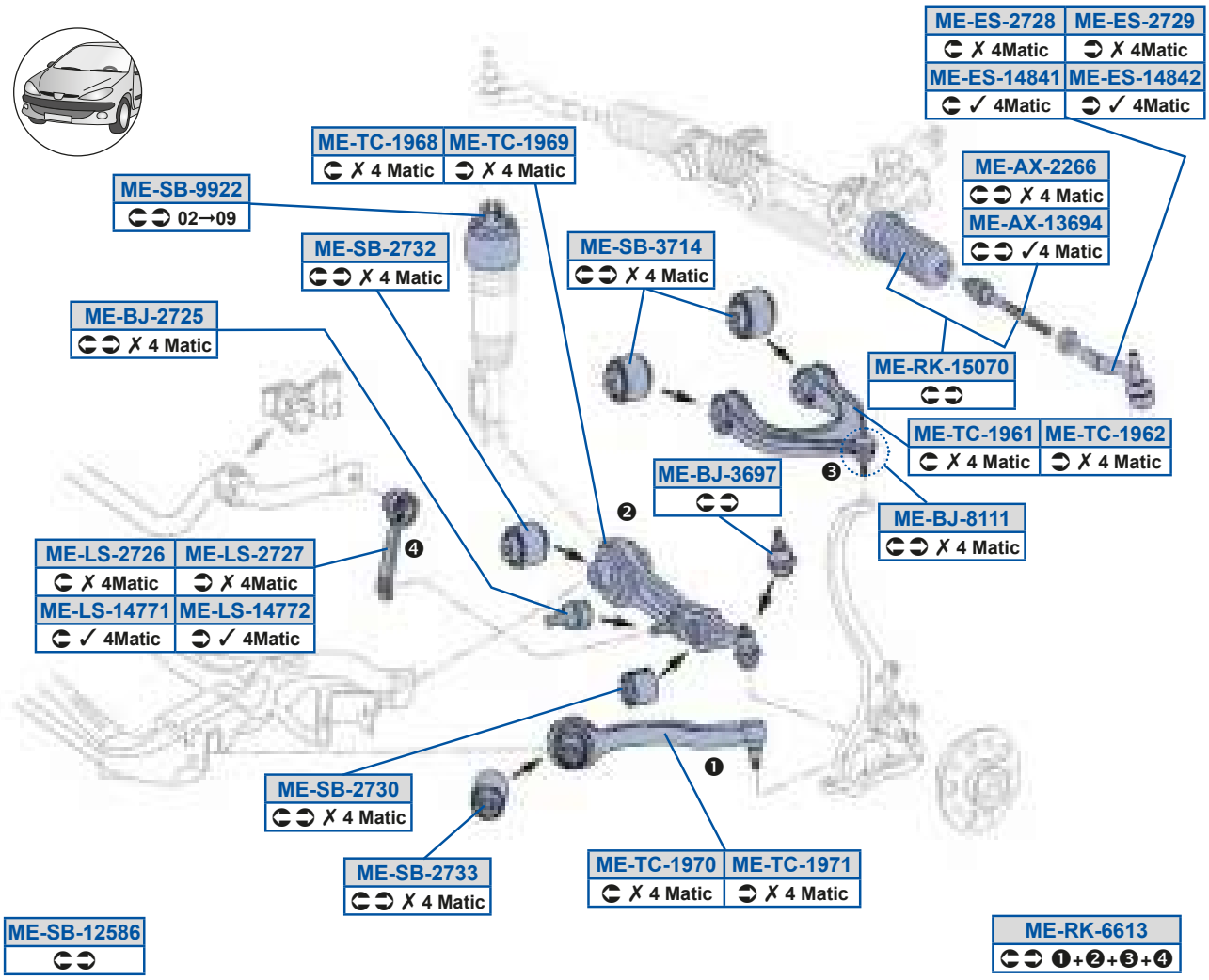
ME-ES-2728
✗ 4Matic
ME-ES-2729
✗ 4Matic
ME-ES-14841
✓ 4Matic
ME-ES-14842
✓ 4Matic
ME-TC-1968
✗ 4 Matic
ME-TC-1969
✗ 4 Matic
ME-SB-9922
02→09
ME-AX-2266
✗ 4 Matic
ME-AX-13694
✓4 Matic
ME-SB-2732
✗ 4 Matic
ME-SB-3714
✗ 4 Matic
ME-BJ-2725
✗ 4 Matic
ME-RK-15070
ME-TC-1961
✗ 4 Matic
ME-TC-1962
✗ 4 Matic
ME-BJ-3697
ME-BJ-8111
✗ 4 Matic
ME-LS-2726
✗ 4Matic
ME-LS-2727
✗ 4Matic
ME-LS-14771
✓ 4Matic
ME-LS-14772
✓ 4Matic
ME-SB-2730
✗ 4 Matic
ME-SB-2733
✗ 4 Matic
ME-TC-1970
✗ 4 Matic
ME-TC-1971
✗ 4 Matic
ME-SB-12586
ME-RK-6613
❶+❷+❸+❹

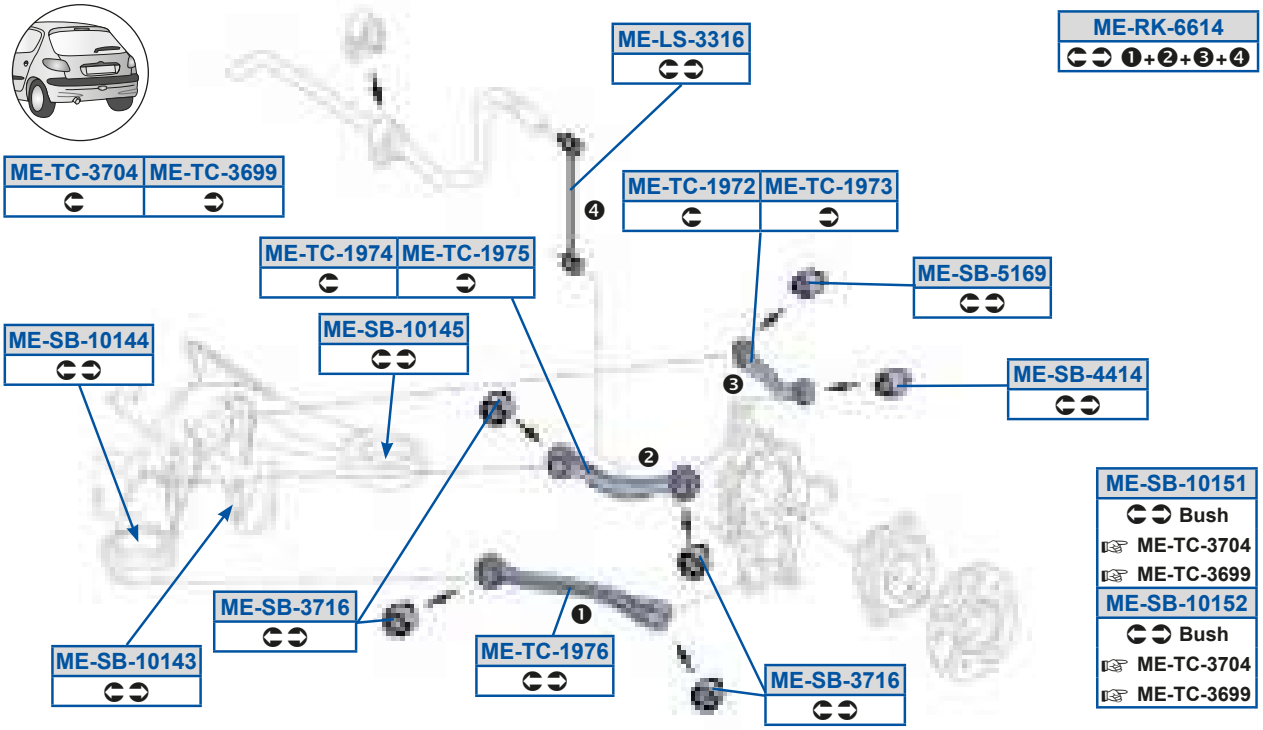
ME-RK-6614
❶+❷+❸+❹
ME-LS-3316
ME-TC-3704
ME-TC-3699
ME-TC-1972
ME-TC-1973
ME-TC-1974
ME-TC-1975
ME-SB-5169
ME-SB-10144
ME-SB-10145
ME-SB-4414
ME-SB-10151
Bush
ME-TC-3704
ME-TC-3699
ME-SB-10152
Bush
ME-TC-3704
ME-TC-3699
ME-SB-3716
ME-SB-10143
ME-TC-1976
ME-SB-3716

MOOG

[S5eQ59GD>
988AA7BB7E3988AA7DF7E

[S5eQ59GDF
988AA7F87E3988AA7G87E

[S5eQ59GDG
988AA7F97E3988AA7G97E

[S5eQ59GE8
988AA788883988AA78C88

[S5eQ59GE9
988AA789883988AA78D88

[S5eQ59GE>
9A7AC79E7D

[S5eQ59GEA
9A7AC79F7D

[S5eQ59GEB
9A7AC7AC7D

[S5eQ59GEC
9A7AC7AD7D

[S5eQ59GED
9A7AC7977D

[S5eQ5ADGG
9A7AC77B9G

[S5eQ5AE8B
9A7AC77A9G

[Sc QSRSd5PS] k

S5QZOdd 0h ; 9; 1	8978G	S5QZOdd Q x áu x 00; 8E1	89798
S5QZOdd Q x 00; 8E1	8978G	S5QZOdd e5[wx 0d; 9; 1	8F78G

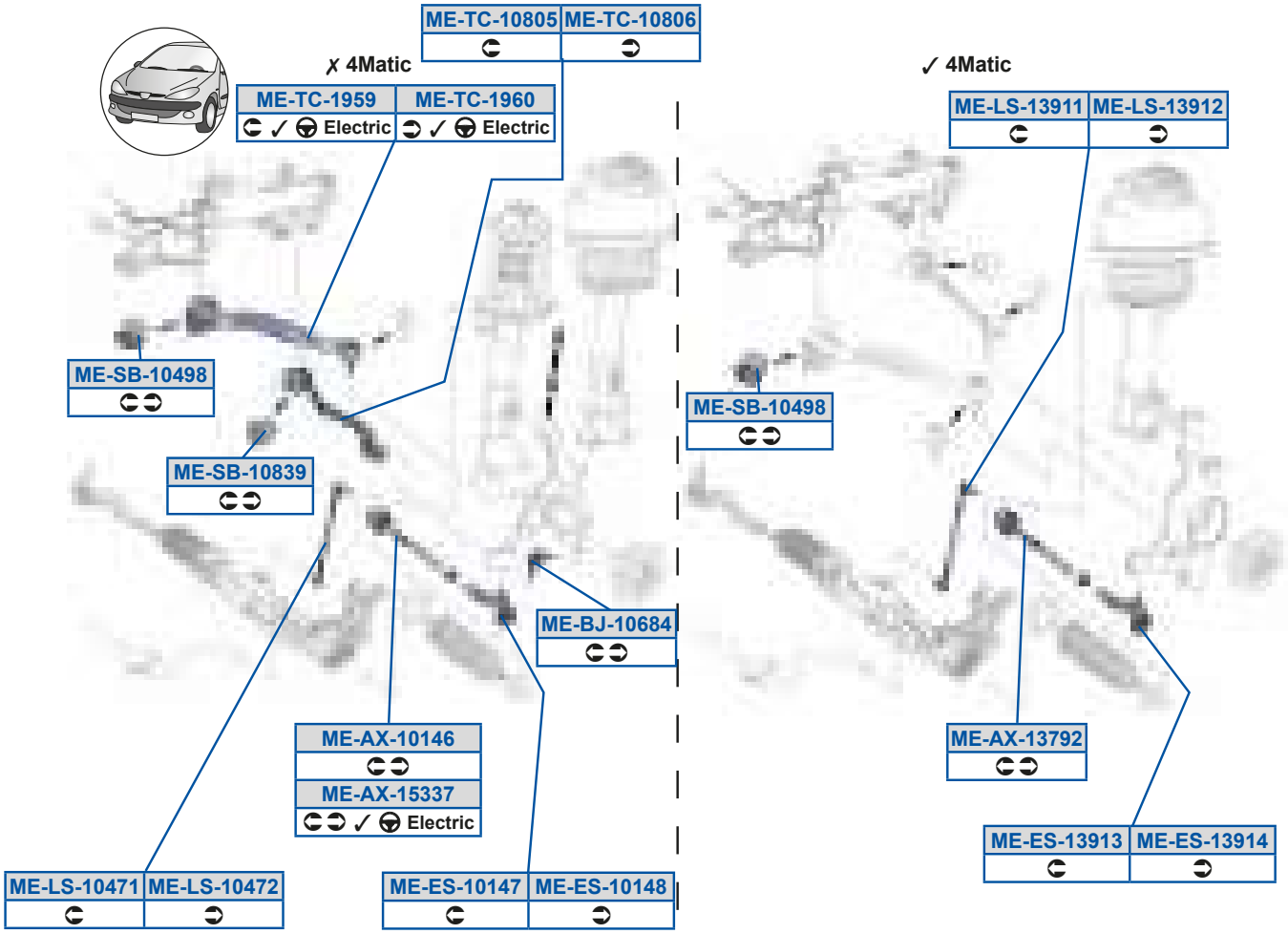

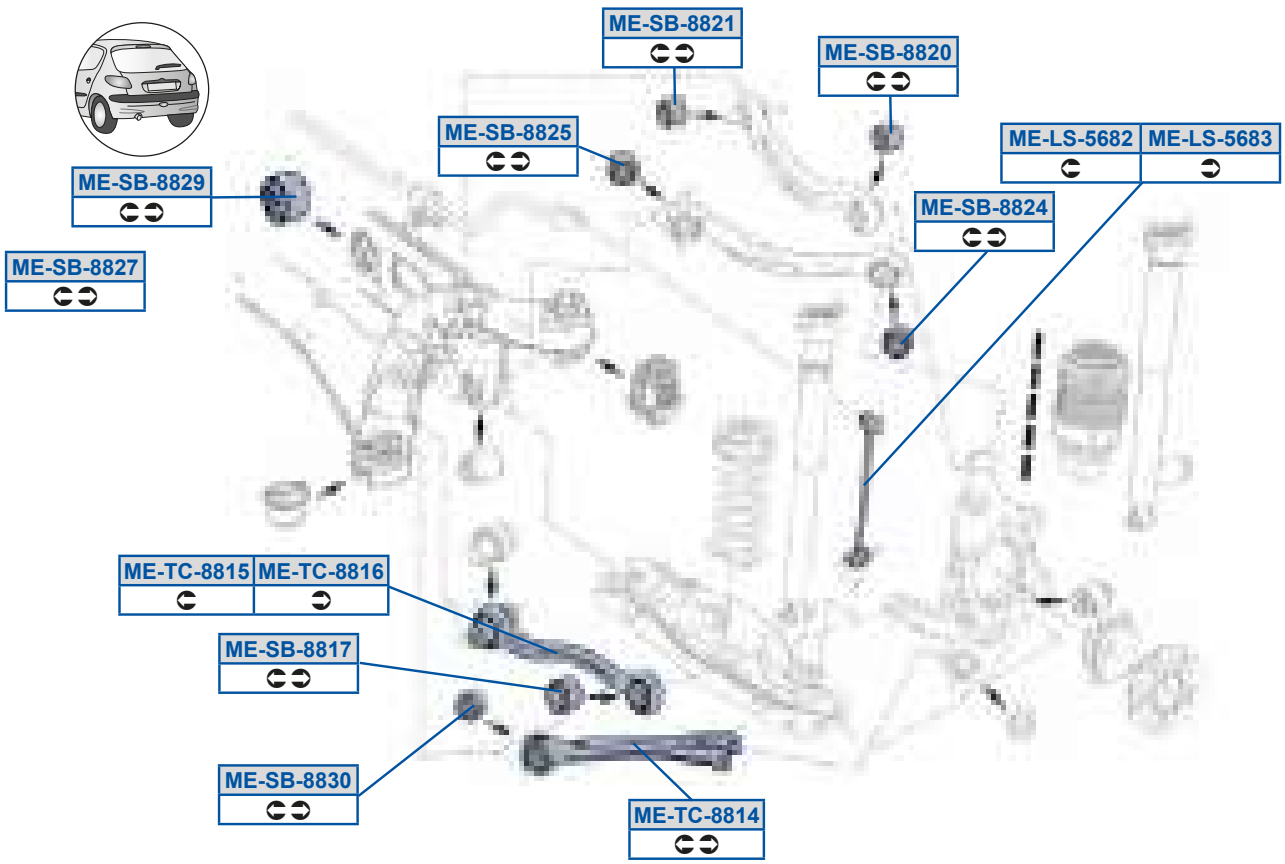

MOOG

[S5Oi 5989BD
989AA7987A

[S5Zd598BE9
989A9788FG

[S5dP5FF9E
97BAC77CCA /40

[S5eQ598F8C
989AA79G883989AA7AG77

[S5Oi 59AEG>
989AA79F7A

[S5Zd598BE>
989A9789FG

[S5dP5FF>8
97BAC78C7D /40

[S5eQ598F8D
989AA7A7883989AA7B777

[S5Oi 59CAAE
97EAA77C77

[S5Zd59AG99
989A979CFG

[S5dP5FF>9
97BAC78C7D /40

[S5eQ59GCG
97AAA77888397AAA78D88

[S5PX598DFB
989AA777AC3989AA778AC

[S5Zd59AG9>
989A979DFG

[S5dP5FF>B
97BAC7987D /40

[S5eQ59GD8
97AAA77988397AAA78E88

[S5Sd5989BE
989AA79A7A398FAA77A77

[S5Zd5CDF>
97BA977CFG

[S5dP5FF>C
97BAC7987D /40

[S5eQ5FF9B
97BAC79E7D

[S5Sd5989BF
989AA7997A398FAA77B77

[S5Zd5CDFA
97BA977BFG

[S5dP5FF>E
97B AC8 7A B9

[S5eQ5FF9C
97BAC77CCA

[S5Sd59AG9A
989AA79B7A3989BD7787C

[S5dP598BGF
989AAA778B

[S5dP5FF>G
97BAC87BB9

[S5eQ5FF9D
97BAC77DCA

[S5Sd59AG9B
989AA79E7A

[S5dP598FAG
989AA79G88 /40

[S5dP5FFA8
97BAC987DC397BAC987DCD

[Sc QSRSd5PS] k

UZO5QZOdd Ci 9CD1	9; 79A		

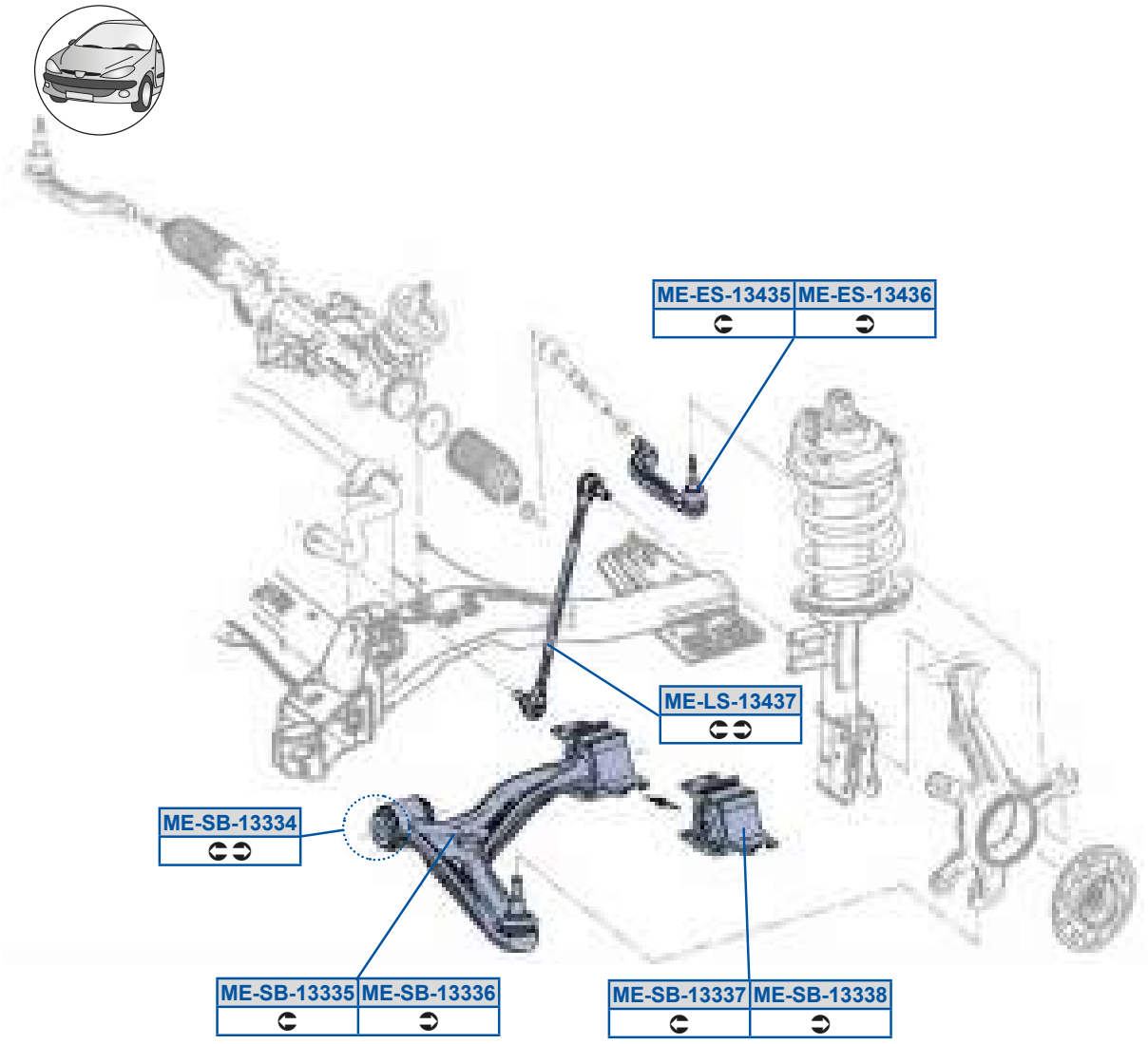

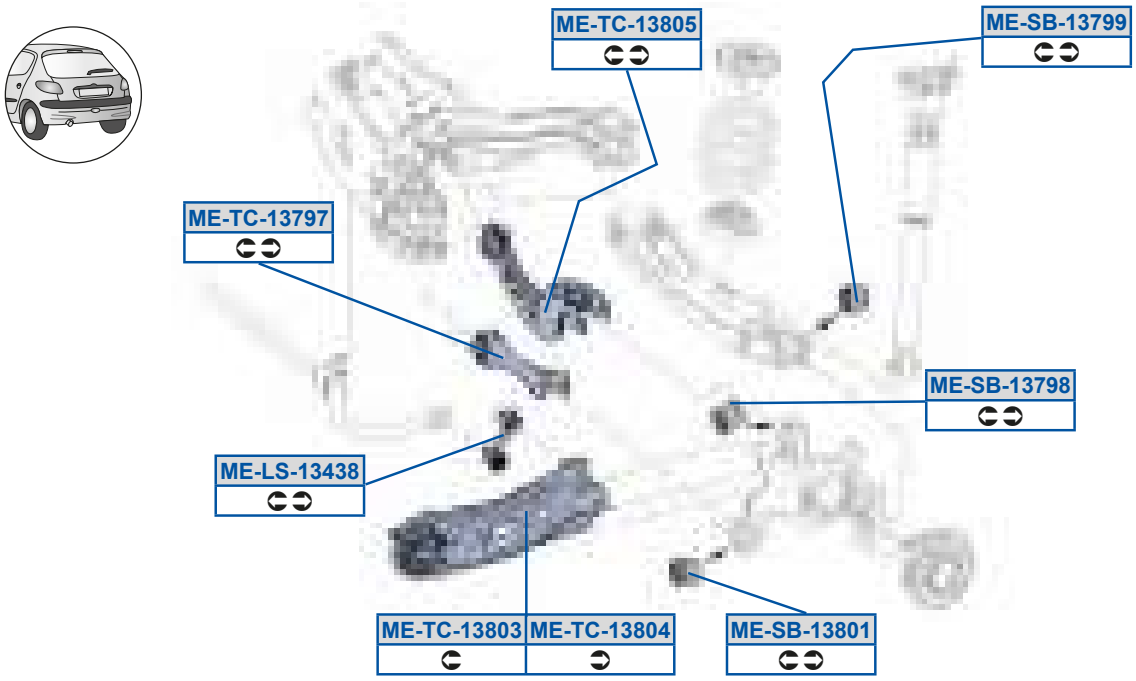

MOOG

[S5Sd59ABAC
9BDAA78E77

[S5dP59AEGG
9BDAC97GDC

[S5Sd59ABAD
9BDAA78F77

[S5dP59AF89
9BDAC979DC

[S5Zd59ABAE
9BDA977DFG

[S5eQ59AAAC
9BDAA78E7E39BDAA7BE77

[S5Zd59ABAF
9BDA977BFG39BDA977EFG

[S5eQ59AAAD
9BDAA78F7E39BDAA7BF77

[S5dP59AAAB
9BDAAA788B

[S5eQ59AEGE
9BDAC777CA

[S5dP59AAAE
9BDAAA778B39BDAAA7877

[S5eQ59AF8A
9BDAC77B7D

[S5dP59AAAF
9BDAAA797739BDAAA798B

[S5eQ59AF8B
9BDAC77C7D

[S5dP59AEGF
9BDAC978DC

[S5eQ59AF8C
9BDAC7877D

[Sc QSRSd5PS] k

UZQ 0i ; CA1	8D79C	UZQ Q x 0Q; CA1	8D79D

ME-LS-15299	ME-LS-15300
⊂	⊃

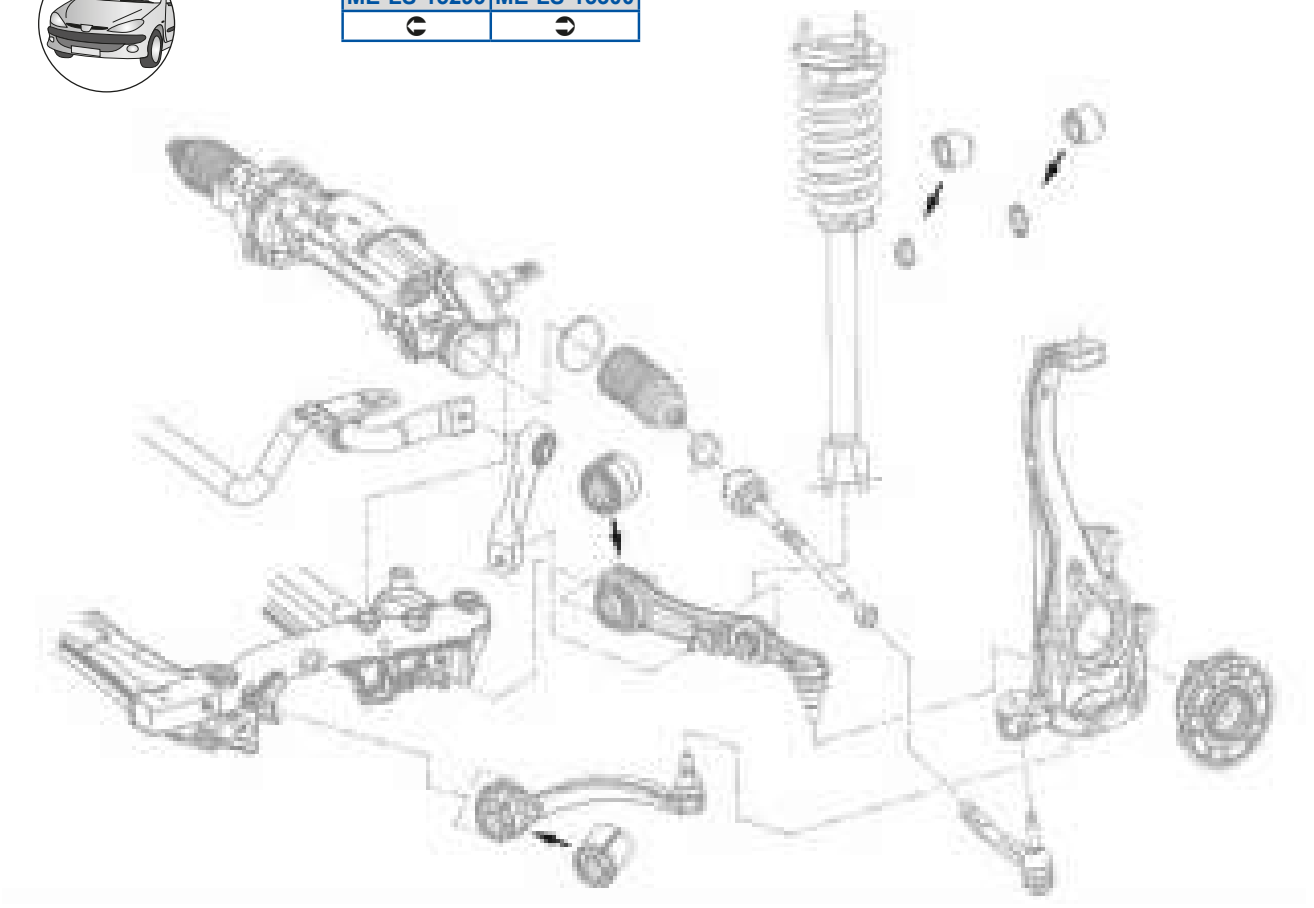

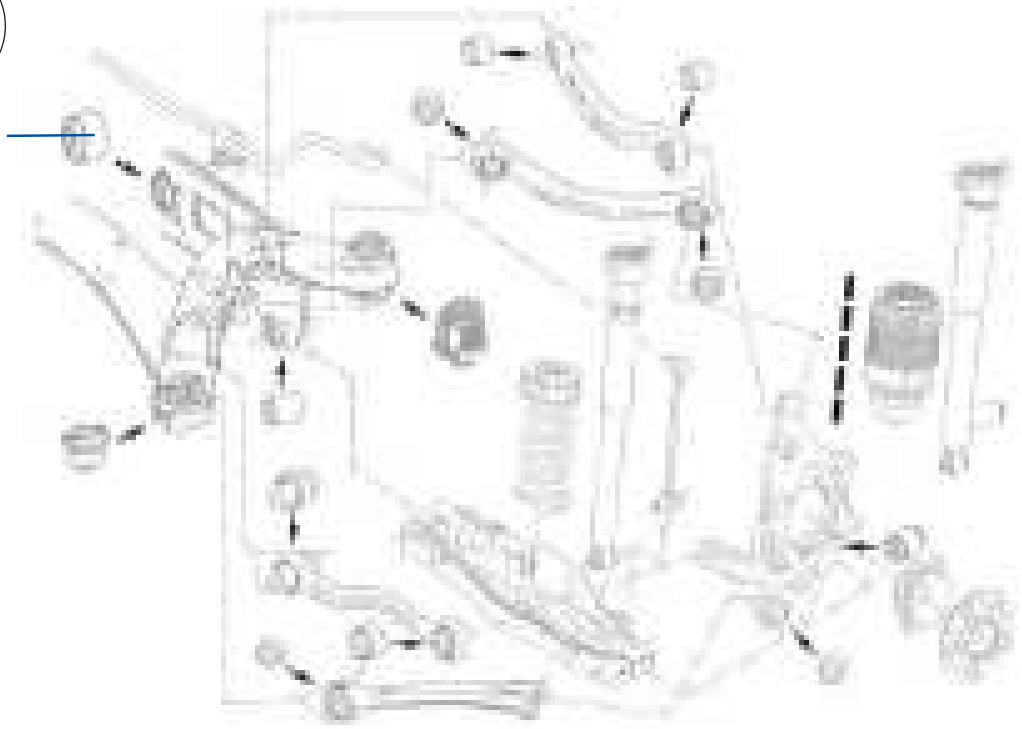

[S5Zd59C>GG

9CAA9A788E

[S5Zd59CA88

9CAA9A798E

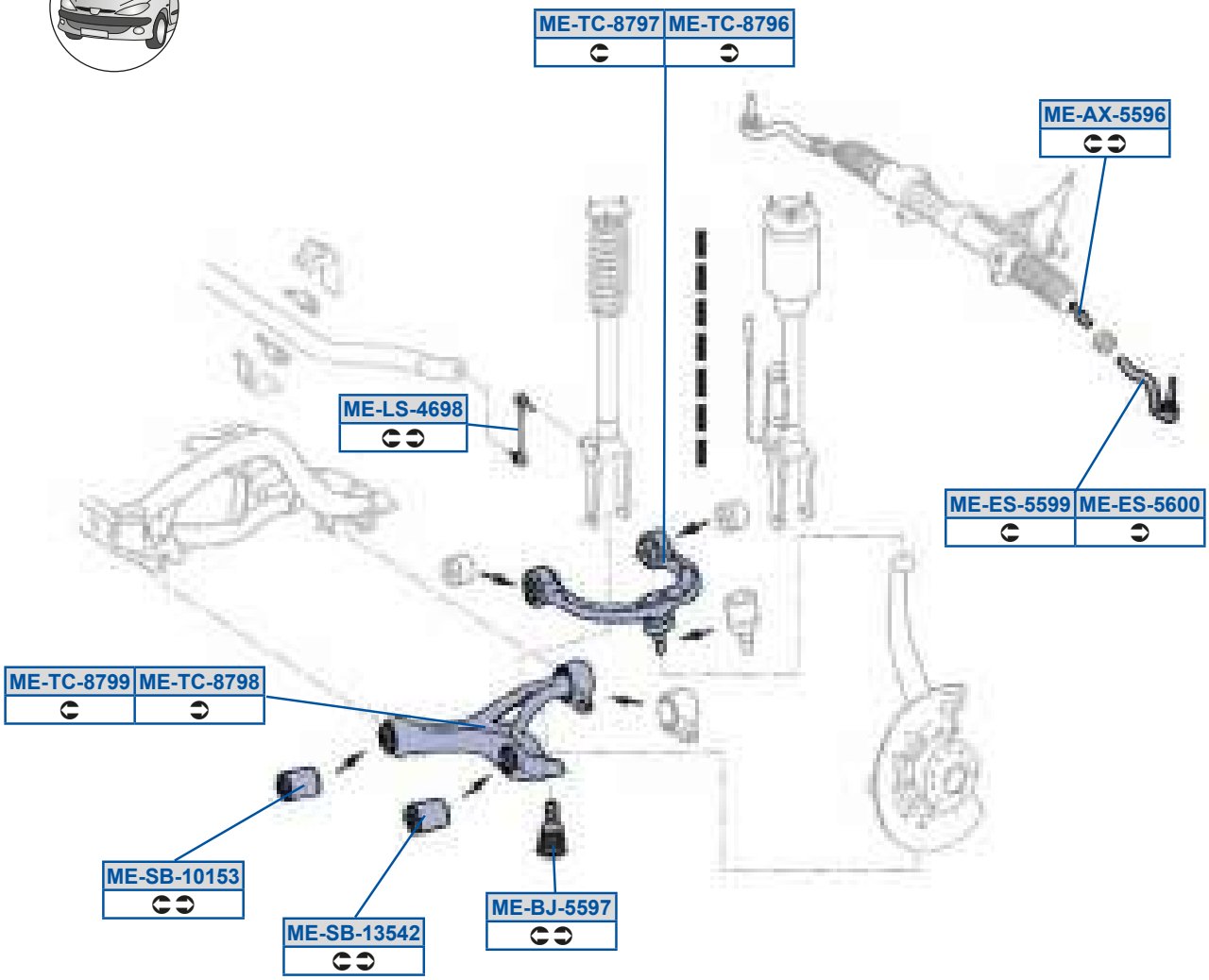
ME-TC-8797
ME-TC-8796
ME-AX-5596
ME-LS-4698
ME-ES-5599
ME-ES-5600
ME-TC-8799
ME-TC-8798
ME-SB-10153
ME-SB-13542
ME-BJ-5597

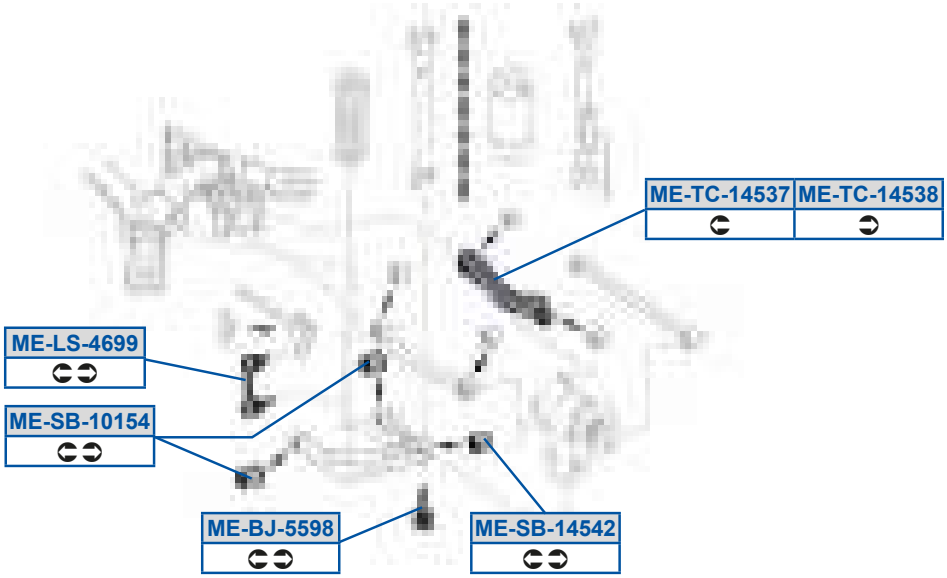
ME-TC-14537
ME-TC-14538
ME-LS-4699
ME-SB-10154
ME-BJ-5598
ME-SB-14542

[S5Oi 5CCGD
8DBBD7777C

[S5dP5989CB
8DBAC978DC

[S5eQ5FEGG
8DB AA7 AB7E38DBAA78E7E

[S5PX5CCGE
8DBAA77GAC

[S5dP59ACB>
8DBAAA7B8B

[S5PX5CCGF
8DBAC9789E38DBAC97A9E

[S5dP59BCB>
8DBA9D7DF838DDA9D79F8

[S5Sd5CCGG
8DBAA7887A39C8AA77E7A

[S5eQ59BCAE
8DBAC78A7D

[S5Sd5CD88
8DBAA7897A39C8AA77F7A

[S5eQ59BCAF
8DBAC78D7D

[S5Zd5BDGF
8DBA978AA938DBA9798A9

[S5eQ5FEGD
9C8AA77F7E

[S5Zd5BDGG
8DBA9789A9

[S5eQ5FEGE
9C8AA77E7E

[S5dP5989CA
8DBAAA7A8B

[S5eQ5FEGF
8DBAA78F7E38DBAA79D7E

[Sc QSRSd5PS] k

UZ5QZOdd Ci 9DD1	8E79;		

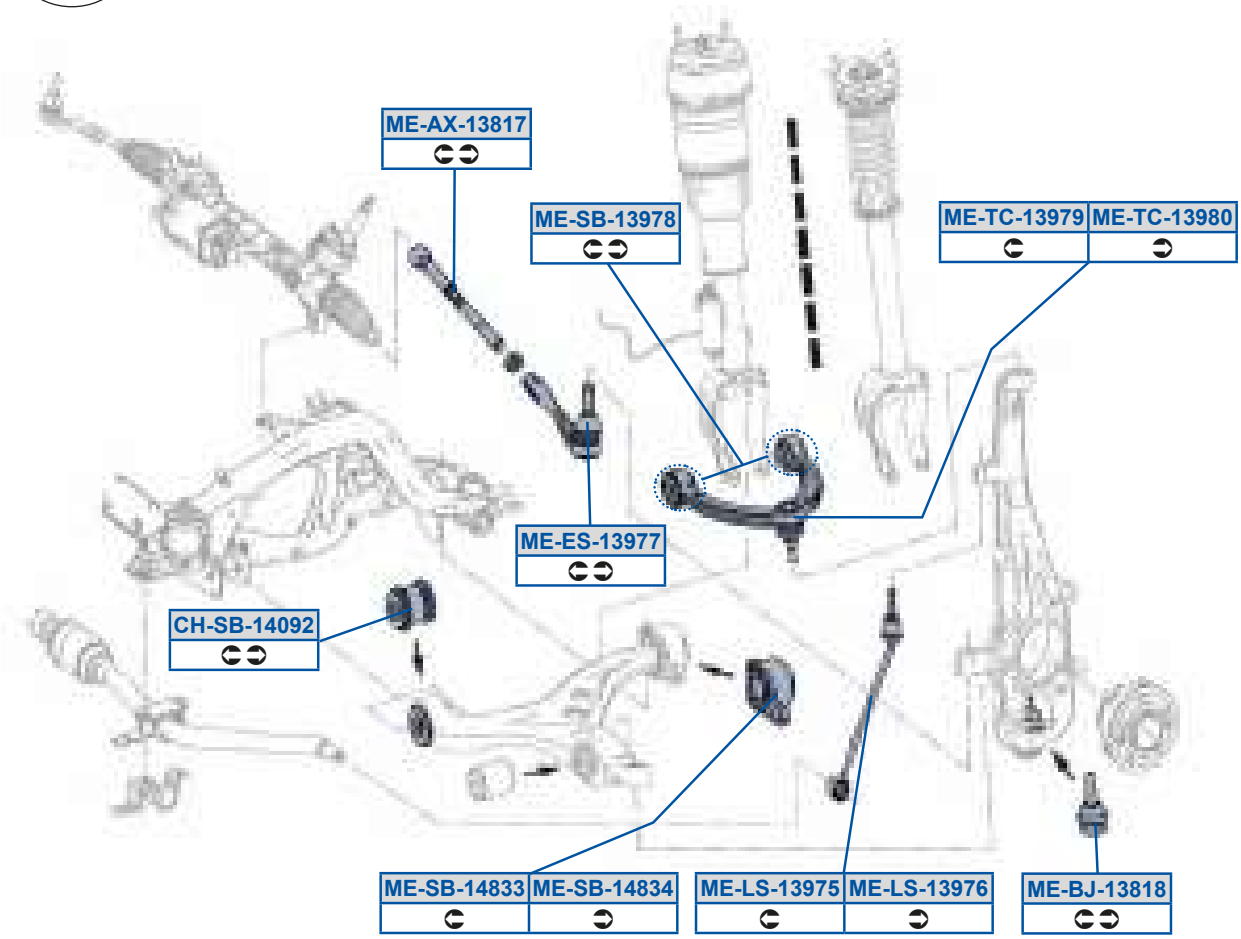

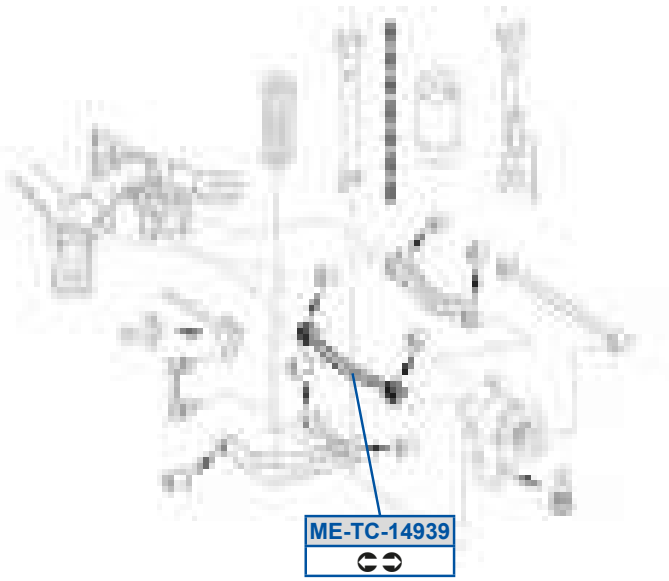

MOOG

QV5dP59B8G>
C8DF8CF00 /40

[S5dP59BFAB
8DBAA7AB7E /40

[S5Oi 59AF9E
8DDAAF7A8C

[S5eQ59AGEG
8DDAA78E7E

[S5PX59AF9F
8DDAA779AC

[S5eQ59AGF8
8DDAA78F7E

[S5Sd59AGEE
8DDAA77B7A

[S5eQ59BCAE
8DBAC78A7D

[S5Zd59AGEC
8DDA977EFG

[S5eQ59BGAG
8DDAC77A7D

[S5Zd59AGED
8DDA977FFG

[S5dP59AGEF
8DDAAA777738DDAAA7E8B

[S5dP59BFAA
8DBAA7AB7E /40

[Sc QSRSd5PS] k

UZY5QZOdd Ci ; 8B1	8D78F		

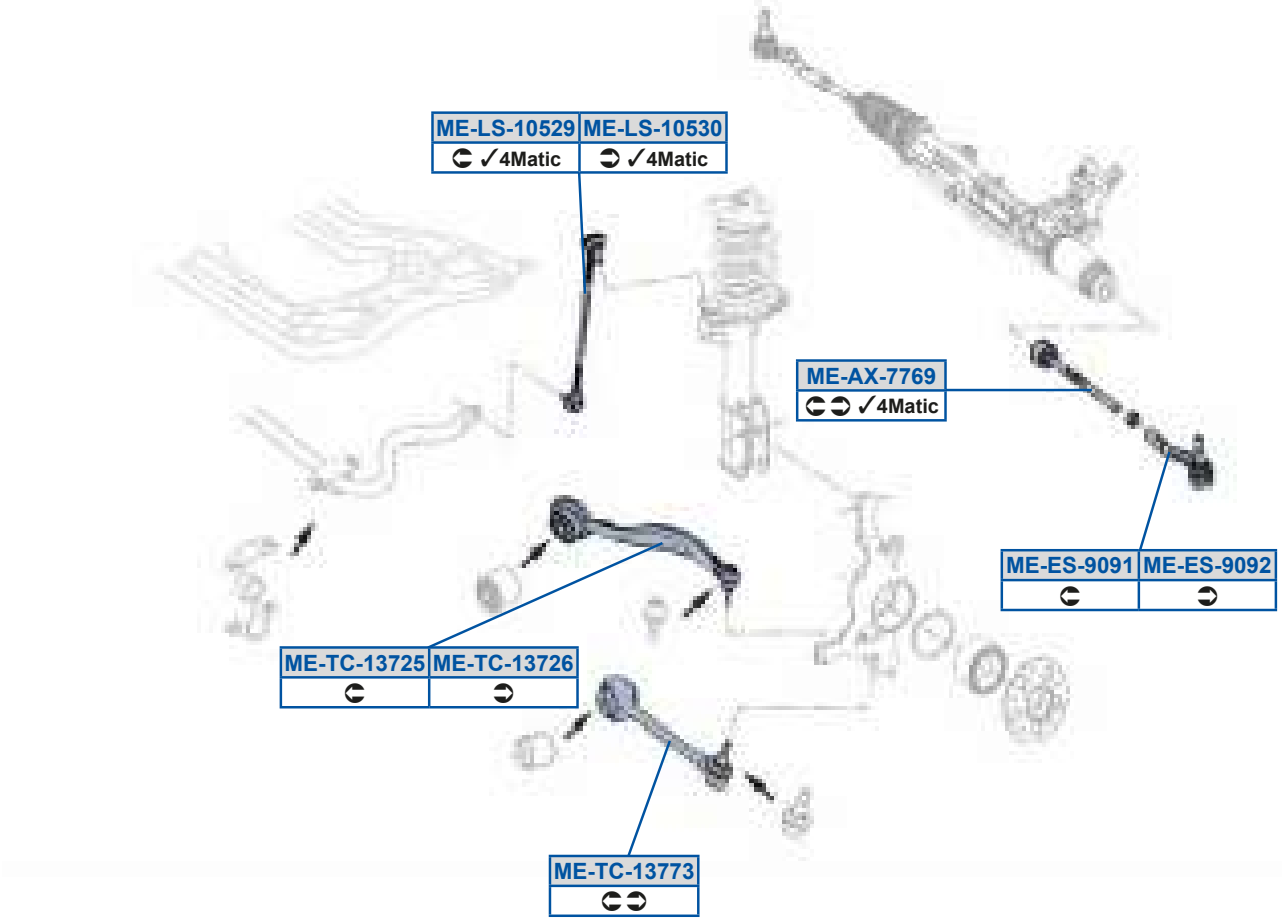

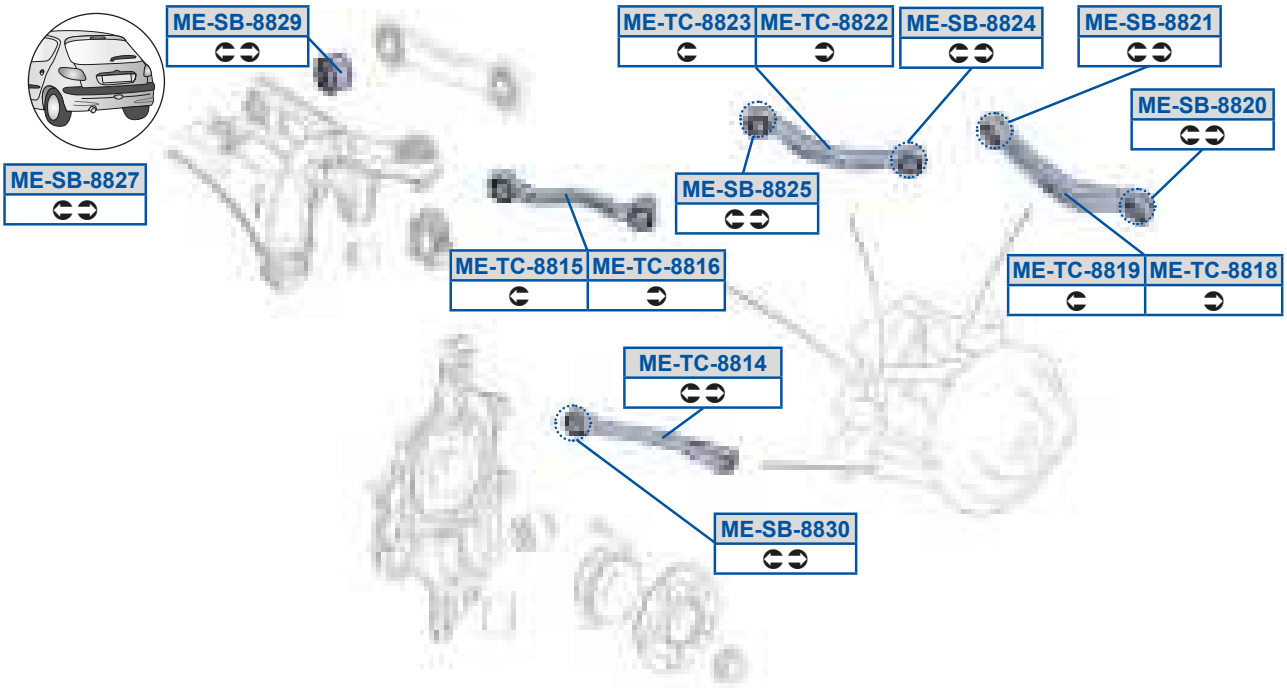

[Sc QSRSd5PS] k

MOOG

[S5Oi 59AEG>
989AA79F7A

[S5dP5FF>C
97BAC7987D /40

[S5eQ5FF9C
97BAC77CCA

[S5Sd5G8G9
97BAA78G7A

[S5dP5FF>E
97B AC8 7A B9

[S5eQ5FF9D
97BAC77DCA

[S5Sd5G8G>
97BAA7977A

[S5dP5FF>G
97BAC87BB9

[S5eQ5FF9F
97BAC78D7D

[S5Zd598C>G
97BA977EFG

[S5dP5FFA8
97BAC987DC397BAC987DCD

[S5eQ5FF9G
97BAC78C7D

[S5Zd598CA8
97BA9799FG

[S5eQ59AE>C
97BAA7F888

[S5eQ5FF>>
97BAC7997D397BAC97ADC

[S5dP5FF>8
97BAC78C7D /40

[S5eQ59AE>D
97BAA7F988

[S5eQ5FF>A
97BAC7987D

[S5dP5FF>9
97BAC78C7D /40

[S5eQ59AEEA
97BAA7F788

[S5dP5FF>B
97BAC7987D /40

[S5eQ5FF9B
97BAC79E7D

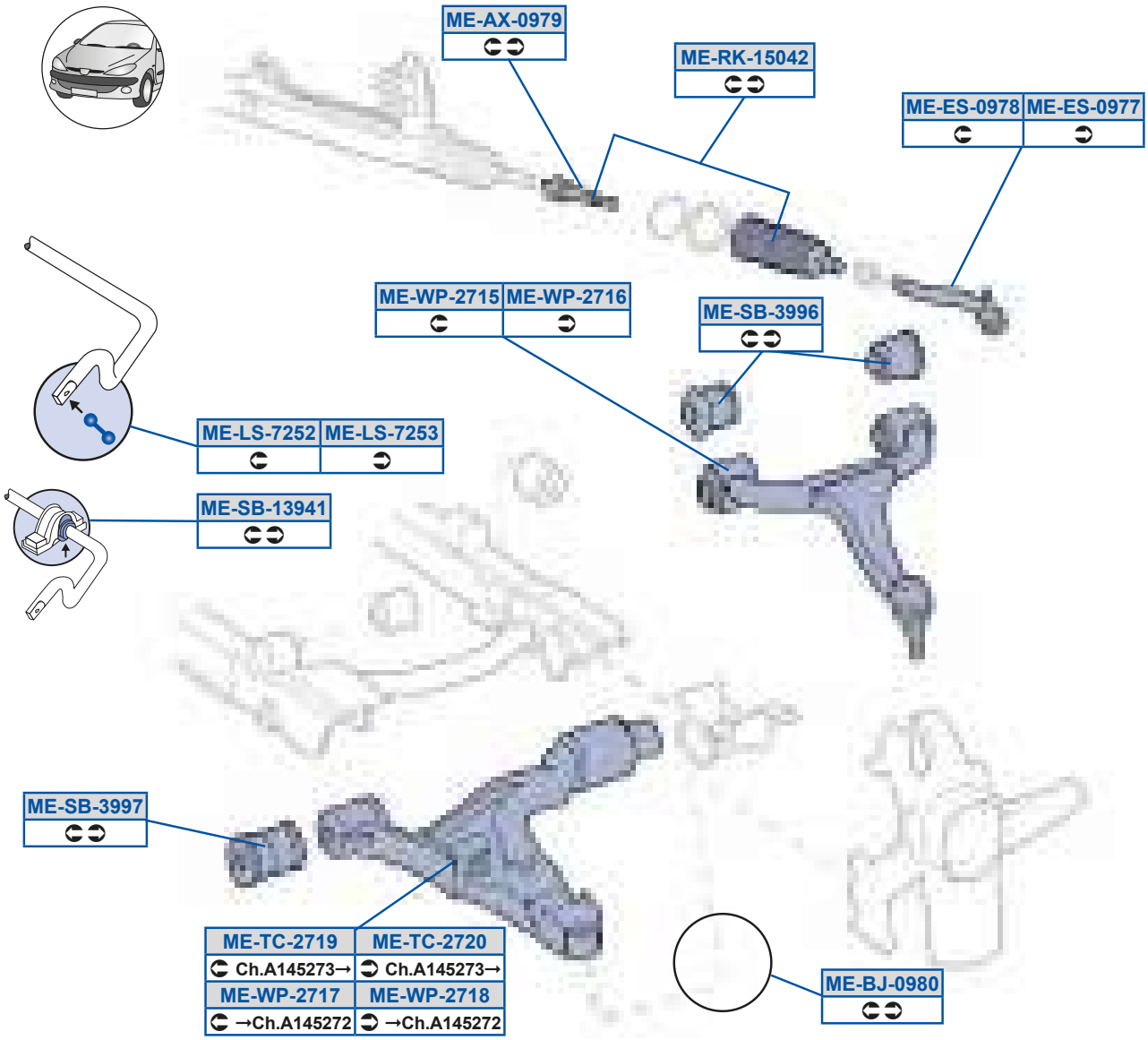
ME-AX-0979
ME-RK-15042
ME-ES-0978
ME-ES-0977
ME-WP-2715
ME-WP-2716
ME-SB-3996
ME-LS-7252
ME-LS-7253
ME-SB-13941
ME-SB-3997
ME-TC-2719
ME-TC-2720
Ch.A145273→
Ch.A145273→
ME-WP-2717
ME-WP-2718
→Ch.A145272
→Ch.A145272
ME-BJ-0980

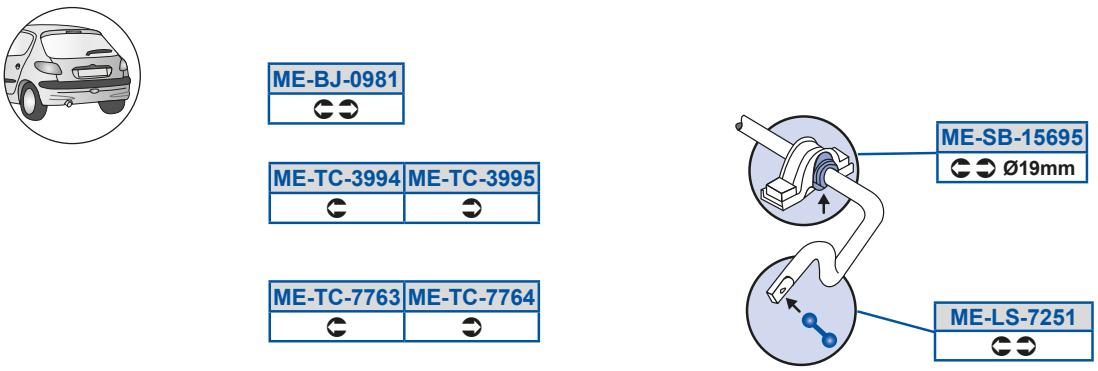
ME-BJ-0981
ME-TC-3994
ME-TC-3995
ME-TC-7763
ME-TC-7764
ME-SB-15695
Ø19mm
ME-LS-7251

[S5Oi 58GEG
8DAAAF798C

[S5c Y59C8B>
8DAAAF798C

[S5e Q5AGGC
8DAAC9787838DAAC97C78

[S5P X58GF8
8DAAA777AC38DAAA778AC

[S5d P59AGB9
8DAA9777BB38DAA9778BB

[S5e Q5EEDA
8DAAC777CA38DAAC77ACA

[S5P X58GF9
8DAAC7778A38DAAC7788A

[S5d P59CDGC
8DAA977788

[S5e Q5EEDB
8DAAC778CA38DAAC77BCA

[S5Sd 58GEE
8DAAA7777A38DAAA7797A

[S5d P5AGGD
8DAAA778EC

[S5h a5>E9C
8DAAAA7778

[S5Sd 58GEF
8DAAA7777A38DAAA7787A

[S5d P5AGGE
8DAAA777EC

[S5h a5>E9D
8DAAAA7878

[S5Zd 5E>C9
8DAA9777A9

[S5e Q5>E9G
8DAAA77F7E

[S5h a5>E9E
8DAAA77B7E

[S5Zd 5E>C>
8DAA9777G7

[S5e Q5>E>8
8DAAA77G7E

[S5h a5>E9F
8DAAA77C7E

[S5Zd 5E>CA
8DAA9778G7

[S5e Q5AGGB
8DAAC9777838DAAC97B78

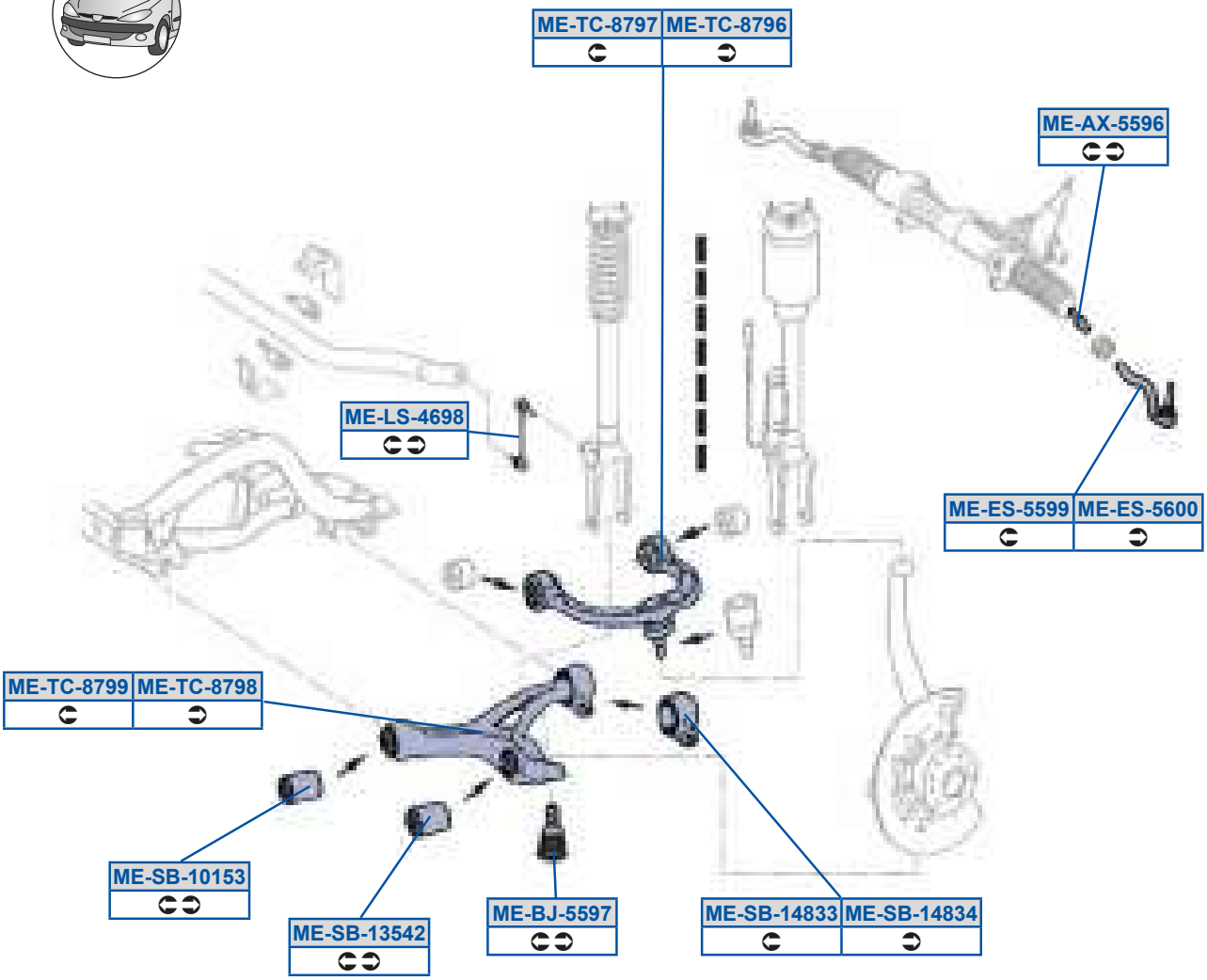
ME-TC-8797
ME-TC-8796
ME-AX-5596
ME-LS-4698
ME-ES-5599
ME-ES-5600
ME-TC-8799
ME-TC-8798
ME-SB-10153
ME-SB-13542
ME-BJ-5597
ME-SB-14833
ME-SB-14834

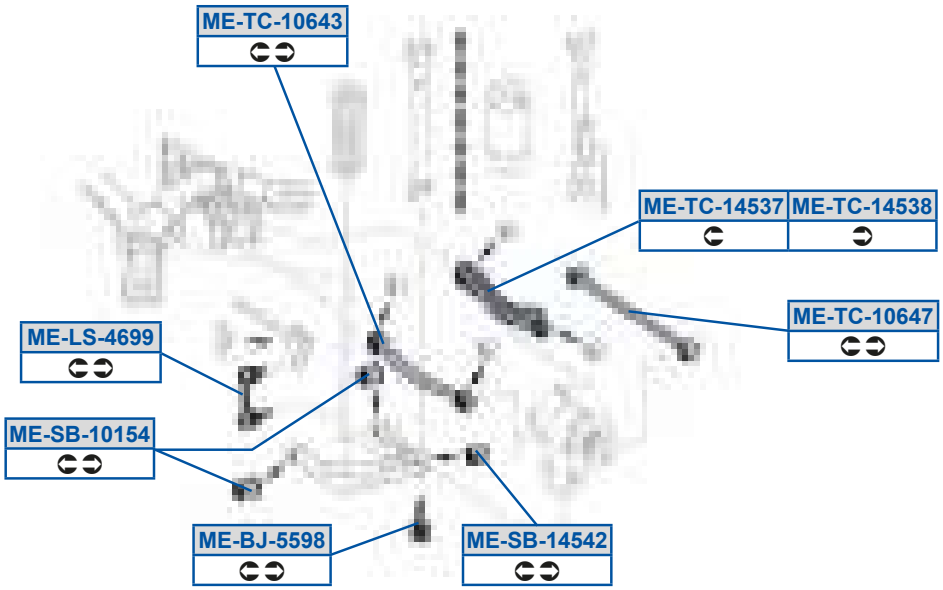
ME-TC-10643
ME-TC-14537
ME-TC-14538
ME-TC-10647
ME-LS-4699
ME-SB-10154
ME-BJ-5598
ME-SB-14542

MOOG

[S5Oi 5CCGD
8DBBD7777C

[S5dP5989CB
8DBAC978DC

[S5eQ59BCAF
8DBAC78D7D

[S5PX5CCGE
8DBAA77GAC

[S5dP59ACB>
8DBAAA7B8B

[S5eQ5FEGD
9C8AA77F7E

[S5PX5CCGF
8DBAC9789E38DBAC97A9E

[S5dP59BCB>
8DBA9D7DF838DDA9D79F8

[S5eQ5FEGE
9C8AA77E7E

[S5Sd5CCGG
8DBAA7887A39C8AA77E7A

[S5dP59BFAA
8DBAA7AB7E /40

[S5eQ5FEGF
8DBAA78F7E38DBAA79D7E

[S5Sd5CD88
8DBAA7897A39C8AA77F7A

[S5dP59BFAB
8DBAA7AB7E /40

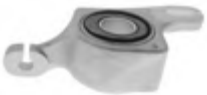

[S5eQ5FEGG
8DB AA7 AB7E38DBAA78E7E

[S5Zd5BDGF
8DBA978AA938DBA9798A9

[S5eQ598DBA
8DBAC78B7D

[S5Zd5BDGG
8DBA9789A9

[S5eQ598DBE
8DBAC777CA38DDAC777CA

[S5dP5989CA
8DBAAA7A8B

[S5eQ59BCAE
8DBAC78A7D

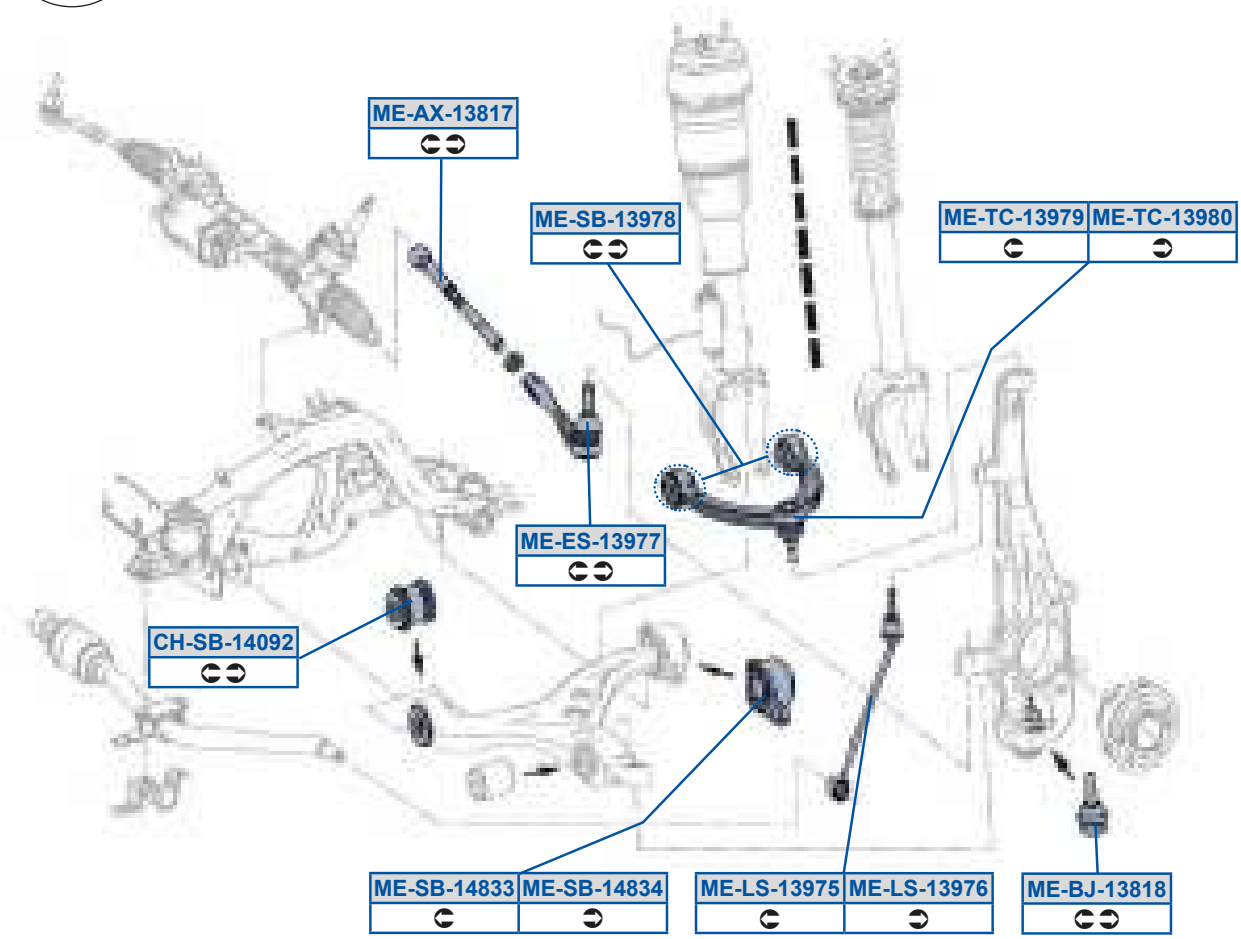
ME-AX-13817
ME-SB-13978
ME-TC-13979
ME-TC-13980
ME-ES-13977
CH-SB-14092
ME-SB-14833
ME-SB-14834
ME-LS-13975
ME-LS-13976
ME-BJ-13818

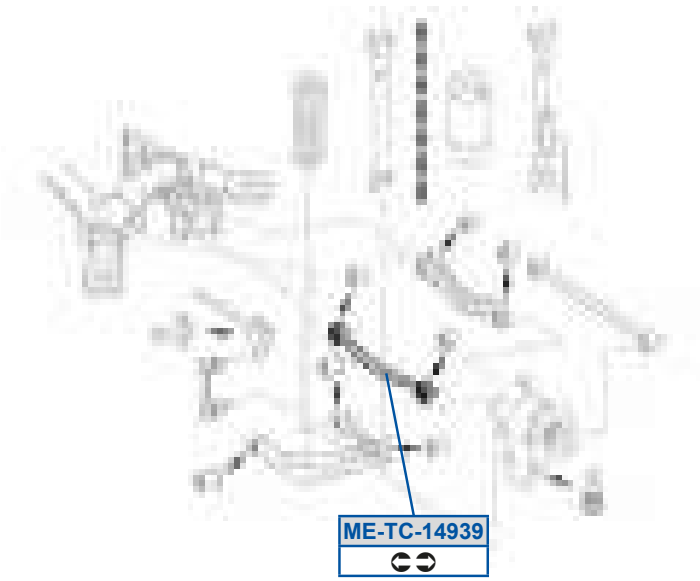
ME-TC-14939

MOOG

QV5dP59B8G>
C8DF8CF00 /40

[S5dP59BFAB
8DBAA7AB7E /40

[S5Oi 59AF9E
8DDAAF7A8C

[S5eQ59AGEG
8DDAA78E7E

[S5PX59AF9F
8DDAA779AC

[S5eQ59AGF8
8DDAA78F7E

[S5Sd59AGEE
8DDAA77B7A

[S5eQ59BGAG
8DDAC77A7D

[S5Zd59AGEC
8DDA977EFG

[S5Zd59AGED
8DDA977FFG

[S5dP59AGEF
8DDAAA777738DDAAA7E8B

[S5dP59BFAA
8DBAA7AB7E /40

[Sc QSRSd5PS] k

c5QZOdd 0h ; C94g; C91	8978D		

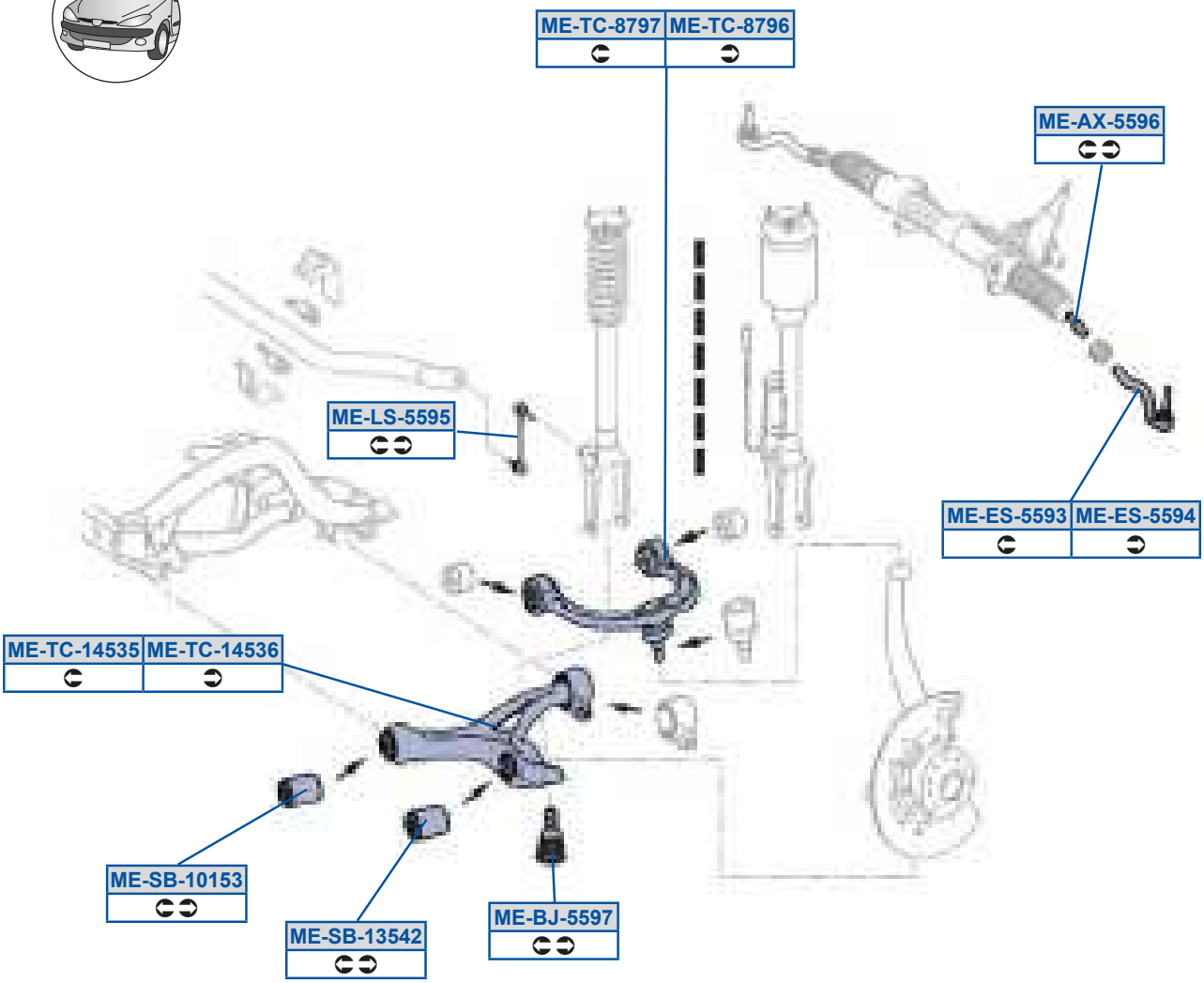

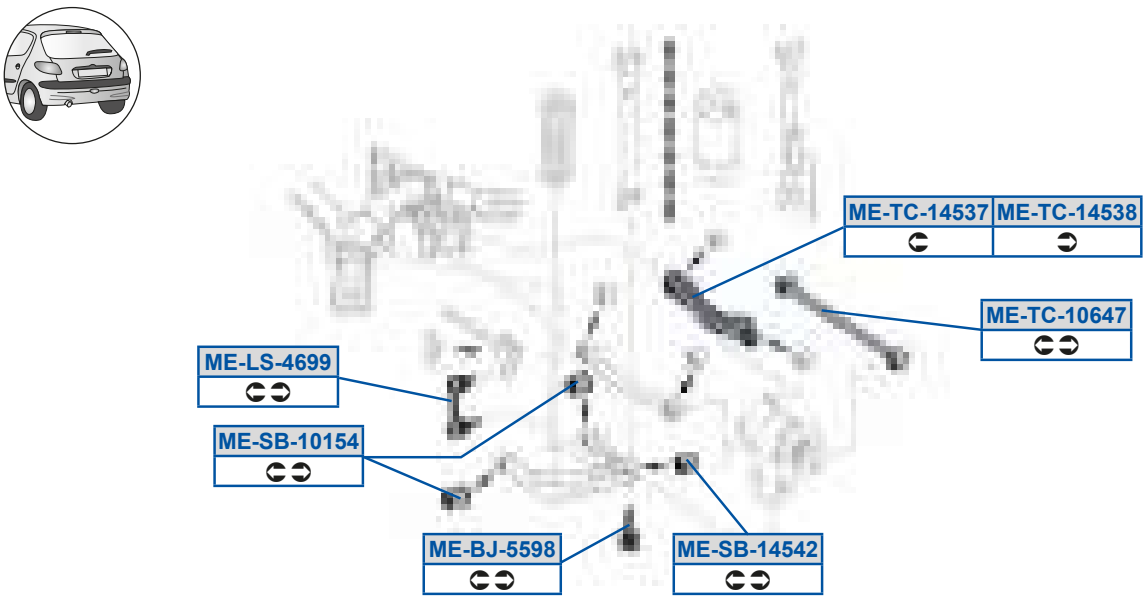

MOOG

[S5Oi 5CCGD
8DBBD7777C

[S5PX5CCGE
8DBAA77GAC

[S5PX5CCGF
8DBAC9789E38DBAC97A9E

[S5Sd5CCGA
8DBAA7887A39C8AA77E7A

[S5Sd5CCGB
8DBAA7897A39C8AA77F7A

[S5Zd5BDGG
8DBA9789A9

[S5Zd5CCGC
8DBA978AA938DBA9798A9

[S5dP5989CA
8DBAAA7A8B

[S5dP5989CB
8DBAC978DC

[S5dP59ACB>
8DBAAA7B8B

[S5dP59BCB>
8DBA9D7DF838DDA9D79F8

[S5eQ598DBE
8DBAC777CA38DDAC777CA

[S5eQ59BCAC
9C8AA7887E39C8AA78A7E

[S5eQ59BCAD
9C8AA7897E39C8AA78B7E

[S5eQ59BCAE
8DBAC78A7D

[S5eQ59BCAF
8DBAC78D7D

[S5eQ5FEGD
9C8AA77F7E

[S5eQ5FEGE
9C8AA77E7E

[Sc QSRSd5PS] k

d5QZOdd 0h ; ; 81	8978C 9; 78D	d5QZOdd 0h ; ; 91	8G78C 9; 79A
d5QZOdd Q x 0Q; 9D1	8C78D 9; 79A		

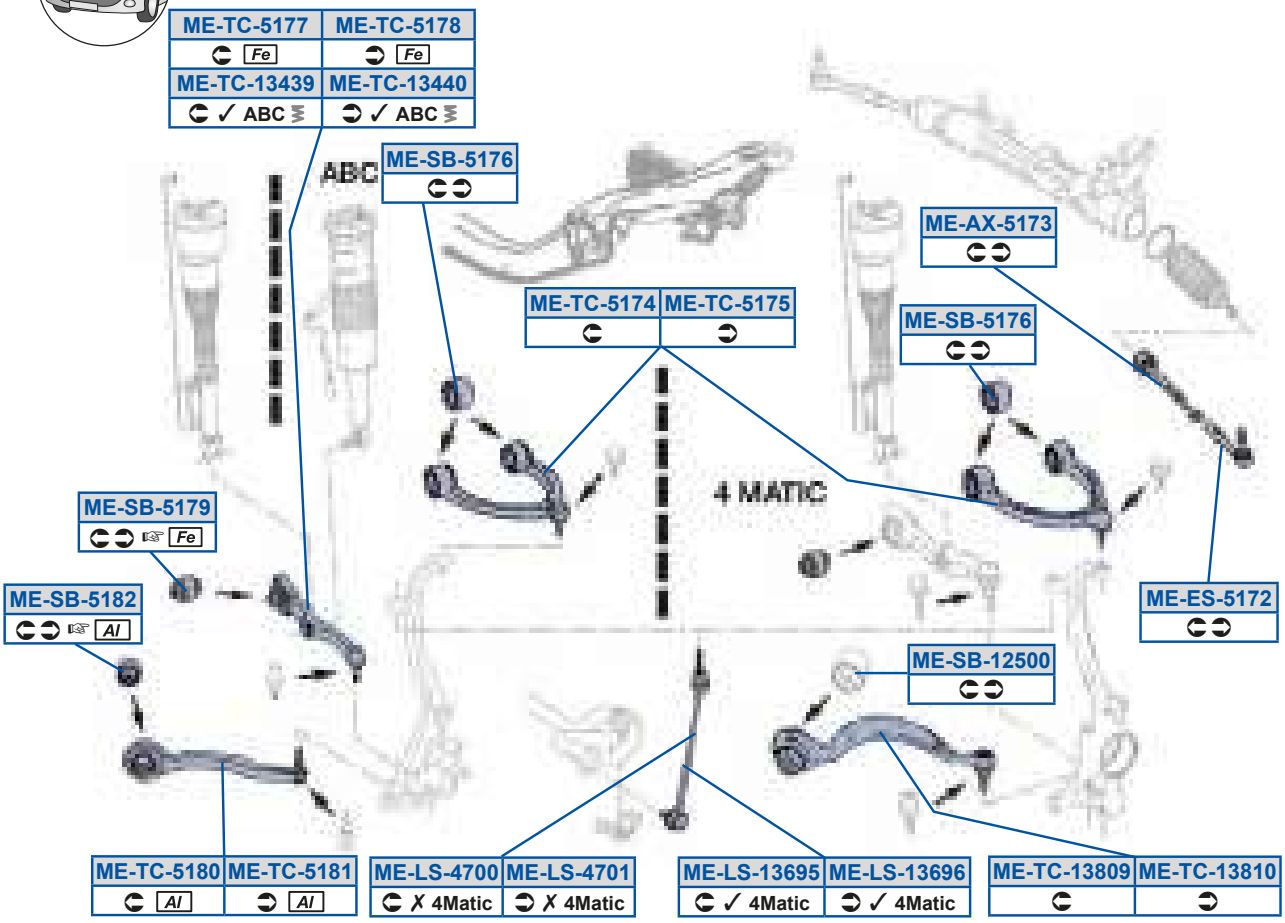

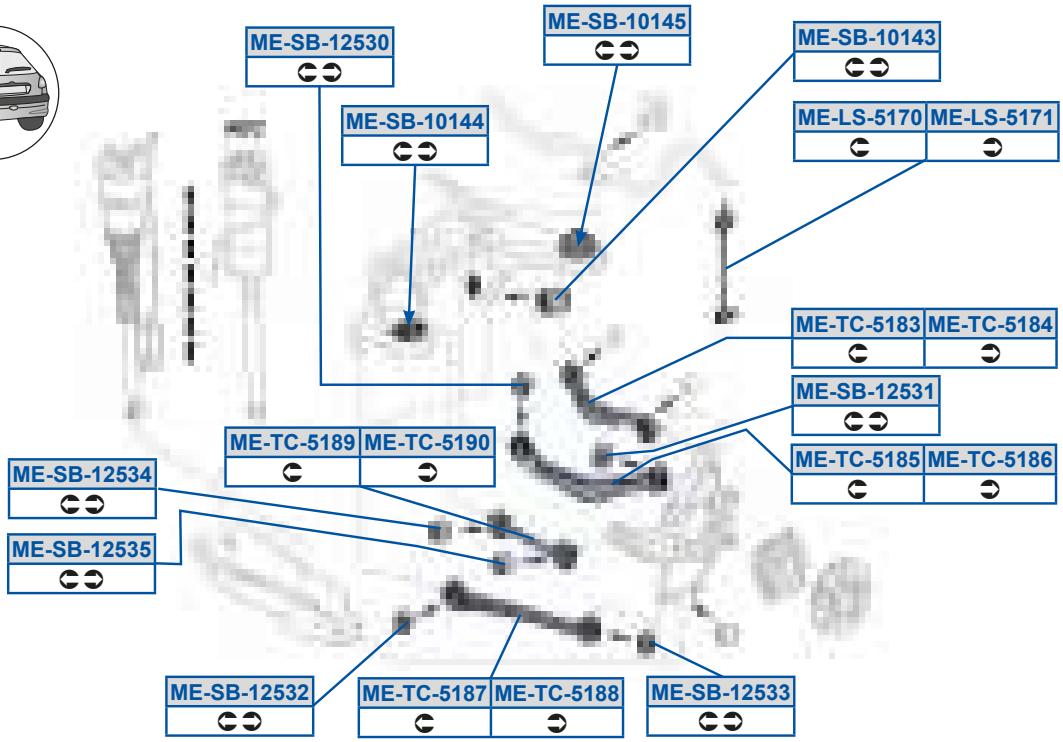

MOOG

[S5Oi 5C9EA
998AA78D7A

[S5dP5989BA
997AC979DC3997AC98ADC

[S5dP59>CAB
998AC998DC

[S5eQ59AF98
998AA7EF7E

[S5Sd5C9E>
998AA78C7A3998AA7AG7A

[S5dP5989BB
988AC887B93988AC88AB9

[S5dP59>CAC
998AC999DC

[S5eQ5C9EB
998AA77A7E3998AA7FG7E

[S5Zd59ADGC
998A978CFG

[S5dP5989BC
9A7AC879B9

[S5dP5C9ED
998AAA798B

[S5eQ5C9EC
998AA77B7E3998AA7G77E

[S5Zd59ADGD
998A978DFG

[S5dP59>C88
998AAA8G8B

[S5dP5C9EG
998AAA7E8B

[S5eQ5C9EE
998AA7DE7E3998AA7F87E

[S5Zd5BE88
998A9778FG

[S5dP59>CA8
998AC988DC

[S5dP5C9F>
998AAA7F8B

[S5eQ5C9EF
998AA7DF7E3998AA7F97E

[S5Zd5BE89
998A9779FG

[S5dP59>CA9
998AC989DC

[S5eQ59ABAG
998AA7FE7E

[S5eQ5C9F8
998AA79A883998AA7DA88

[S5Zd5C9E8
998A978GFG

[S5dP59>CA>
998AC98ADC

[S5eQ59ABB8
998AA7FF7E

[S5eQ5C9F9
998AA779B83998AA79B88

[S5Zd5C9E9
998A9799FG

[S5dP59>CAA
998AC98BDC

[S5eQ59AF8G
998AA7EE7E

[S5eQ5C9FA
998AC77B7D

d5QZOdd Oh ; ; 81	8978C 9; 78D	d5QZOdd Oh ; ; 91	8G78C 9; 79A
d5QZOdd Q x OQ; 9D1	8C78D 9; 79A		

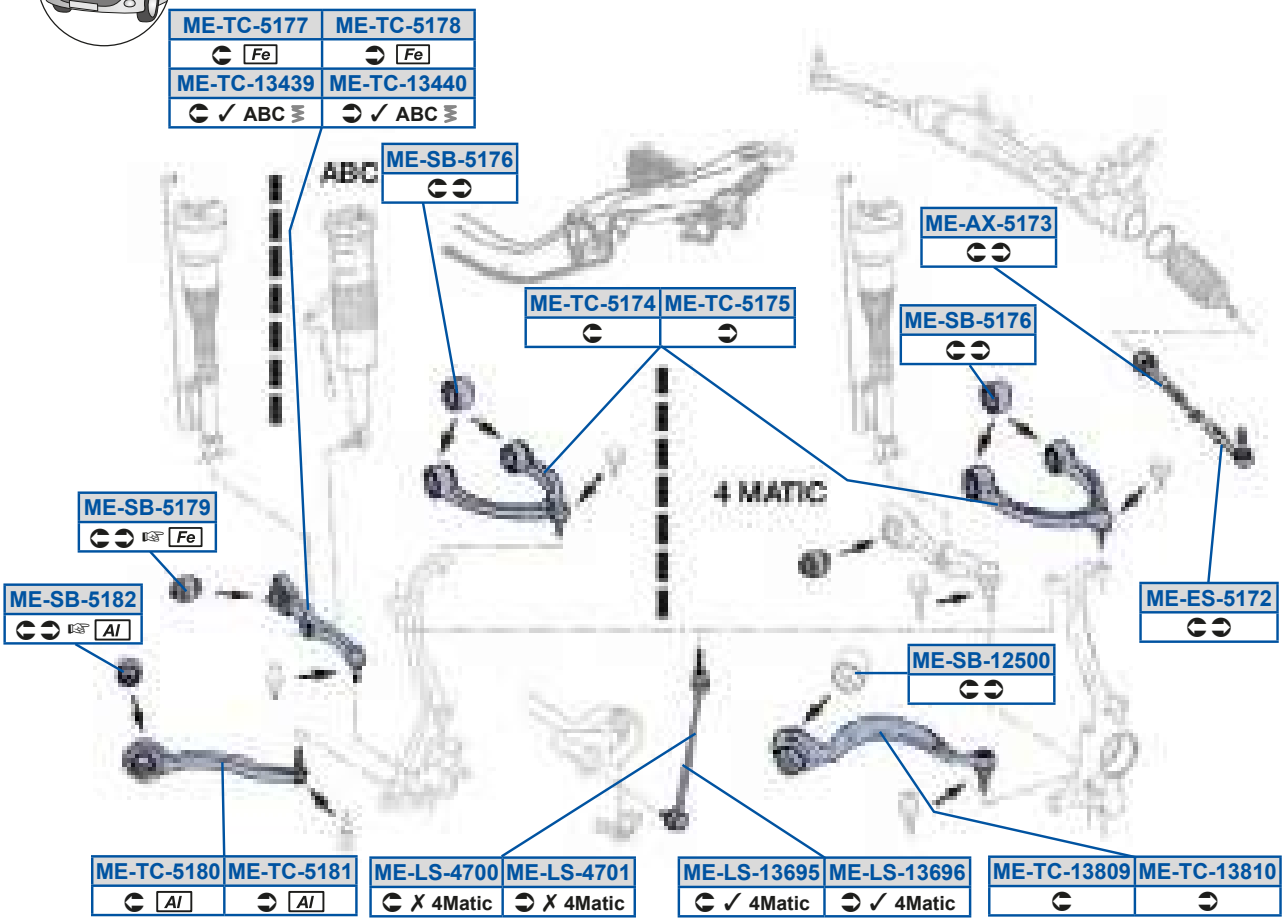

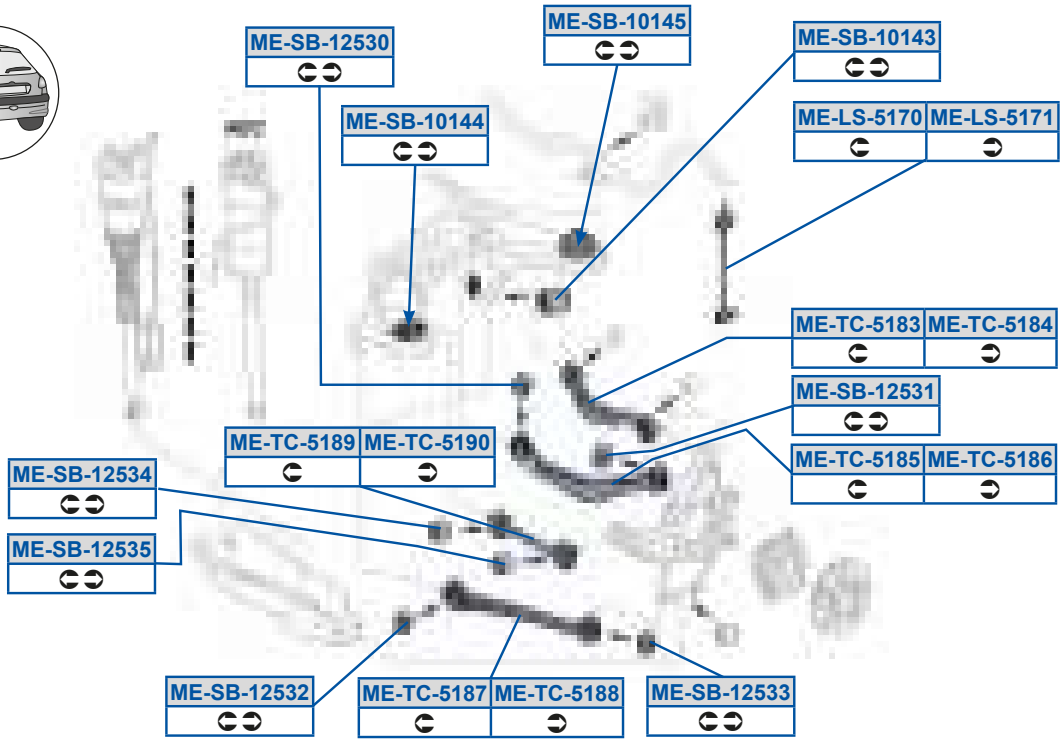

[S5eQ5C9FB
998AC77D7D

[S5eQ5C9FC
998AC7797D

[S5eQ5C9FD
998AC7877D

[S5eQ5C9FE
998AC77E7D

[S5eQ5C9FF
998AC77F7D

[S5eQ5C9FG
998AC788CA

[S5eQ5C9G8
998AC789CA

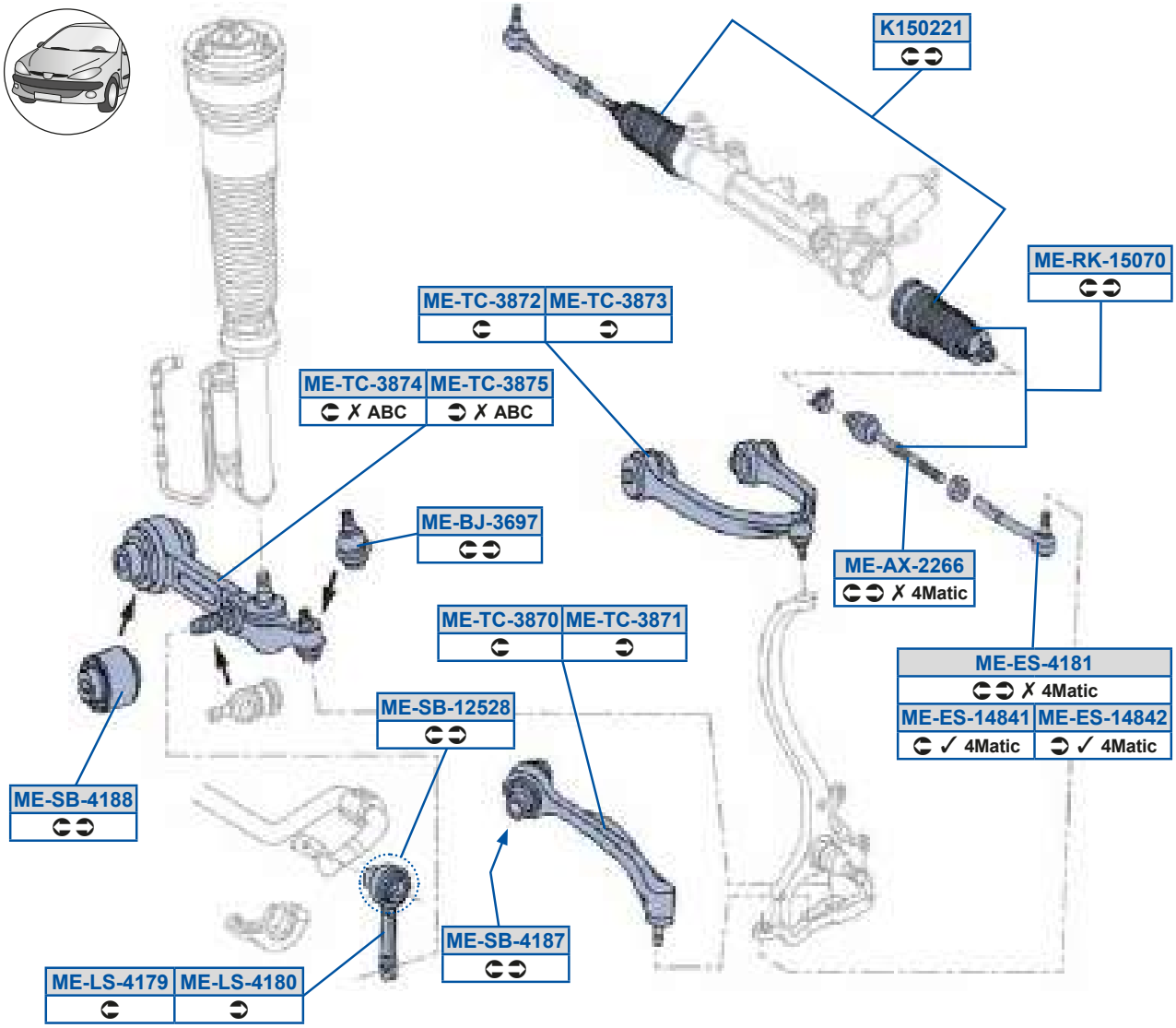
K150221
ME-RK-15070
ME-TC-3872
ME-TC-3873
ME-TC-3874
✗ ABC
ME-TC-3875
✗ ABC
ME-BJ-3697
ME-AX-2266
✗ 4Matic
ME-TC-3870
ME-TC-3871
ME-ES-4181
✗ 4Matic
ME-ES-14841
✓ 4Matic
ME-ES-14842
✓ 4Matic
ME-SB-12528
ME-SB-4188
ME-SB-4187
ME-LS-4179
ME-LS-4180

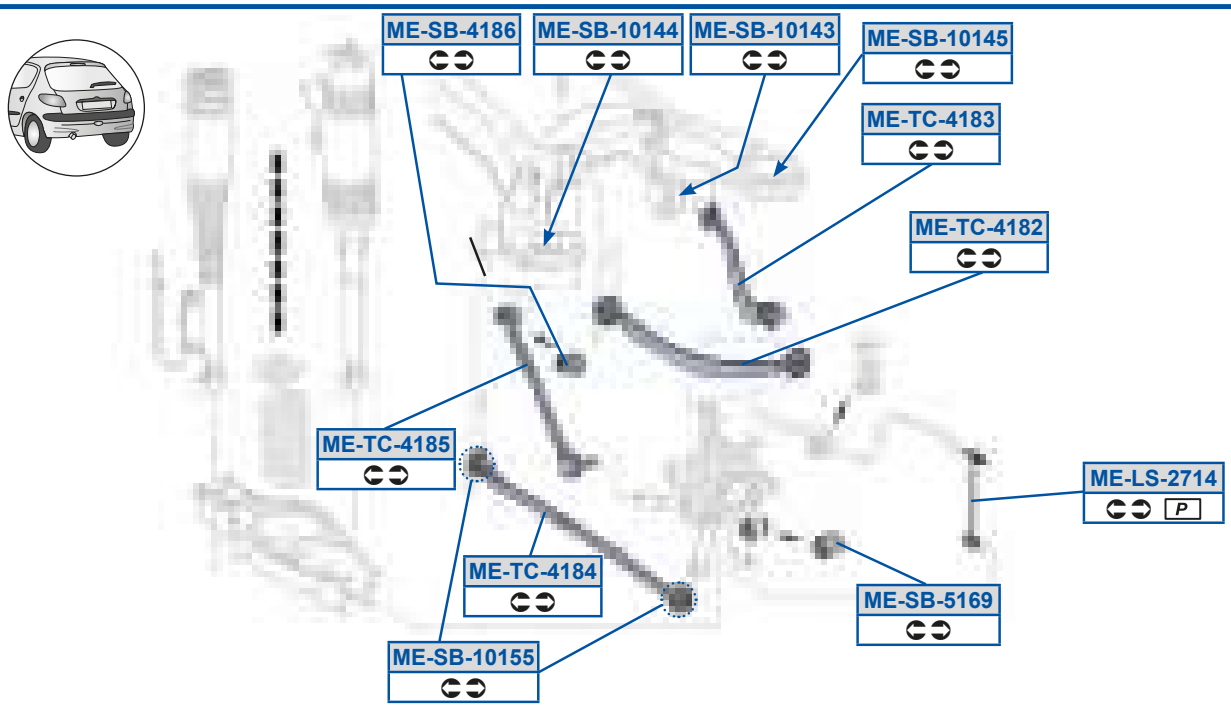
ME-SB-4186
ME-SB-10144
ME-SB-10143
ME-SB-10145
ME-TC-4183
ME-TC-4182
ME-TC-4185
ME-LS-2714
P
ME-TC-4184
ME-SB-5169
ME-SB-10155

MOOG

Y9C8>>9
997BDA79GD

[S5Zd5B9F8
997A978CFG3997A978DFG

[S5dP5B9FE
997AAA8F8B

[S5eQ5AFEC
997AA7EF7E3997AA7G77E

[S5Oi 5>>DD
988AA79G7A3988AAF778C

[S5cY59C8E8
988AA79G7A3988AAF778C

[S5dP5B9FF
997AA7FD7E3997AAA8E8B

[S5eQ5B9F>
997AC7997D

[S5PX5ADGE
988AA779AC3988AA77BAC

[S5dP5989BA
997AC979DC3997AC98ADC

[S5dP5C9DG
997AC9779E

[S5eQ5B9FA
997AC79B7D

[S5Sd59BFB9
997AAF8A8C

[S5dP5989BB
988AC887B93988AC88AB9

[S5eQ5AFE8
997AA78F883997AA7AA88

[S5eQ5B9FB
8B7AC7AB7D3997AC79D7D

[S5Sd59BFB>
997AAF8B8C

[S5dP5989BC
9A7AC879B9

[S5eQ5AFE9
997AA78E883997AA7AB88

[S5eQ5B9FC
997AC77BCA

[S5Sd5B9F9
997AAF7C8C3997AAF878C

[S5dP5989CC
8B7AC9BGDC

[S5eQ5AFE>
997AA78B7E3997AA7FA7E

[S5Zd5>E9B
8B7A977FFG38B7A97ACFG

[S5dP59>C>F
997A978CFG /40

[S5eQ5AFEA
997AA78C7E3997AA7FB7E

[S5Zd5B9EG
997A978CFG3997A978DFG

[S5dP5B9FD
997AC977DC

[S5eQ5AFEB
997AA7EE7E3997AA7FG7E

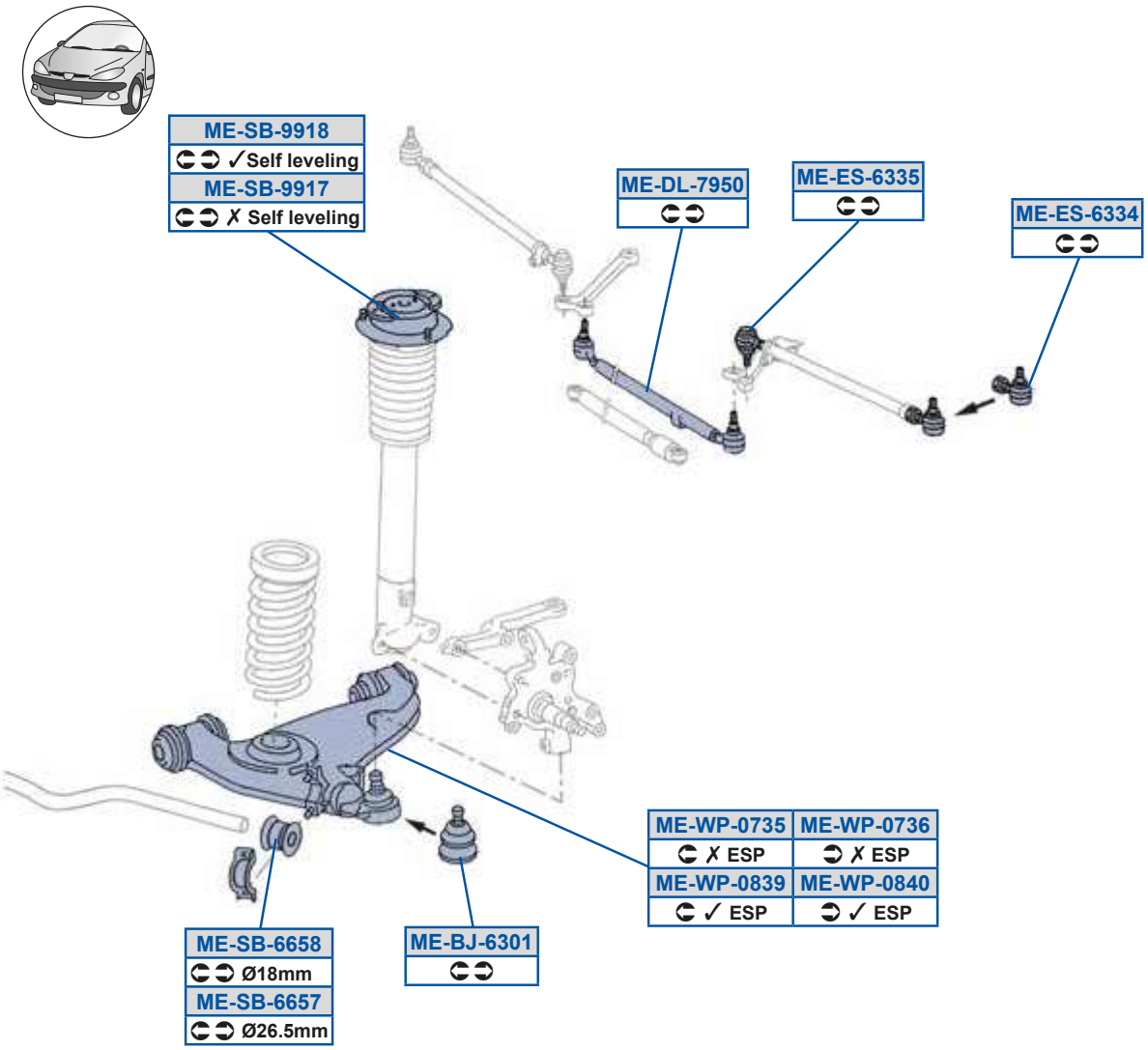
ME-SB-9918
✓Self leveling
ME-SB-9917
✗ Self leveling
ME-DL-7950
ME-ES-6335
ME-ES-6334
ME-WP-0735
✗ ESP
ME-WP-0736
✗ ESP
ME-WP-0839
✓ ESP
ME-WP-0840
✓ ESP
ME-SB-6658
Ø18mm
ME-SB-6657
Ø26.5mm
ME-BJ-6301

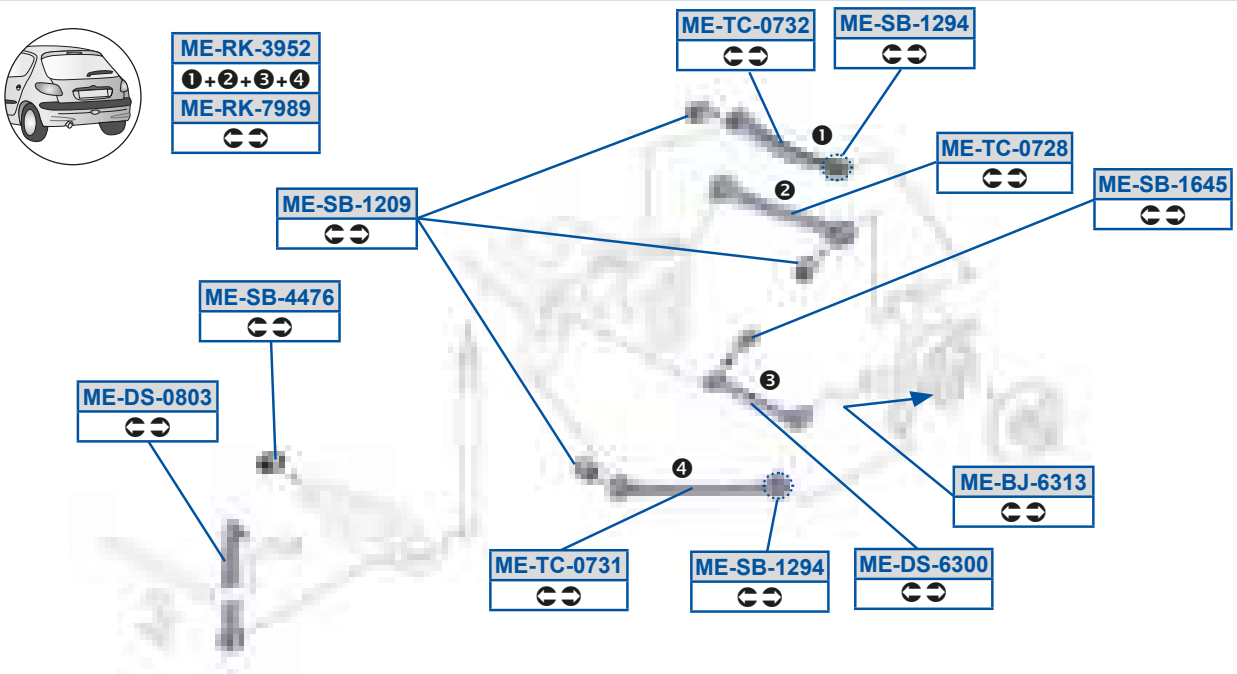
ME-RK-3952
❶+❷+❸+❹
ME-RK-7989
ME-TC-0732
ME-SB-1294
ME-TC-0728
ME-SB-1645
ME-SB-1209
ME-SB-4476
ME-DS-0803
ME-BJ-6313
ME-TC-0731
ME-SB-1294
ME-DS-6300

[S5PX5DA89
89BAAA789E389BAAA7A9E

[S5PX5DA9A
978AC9779E3997AC9799E

[S5RZ5EGC8
89GBD77B7C

[S5Rd58F8A
89BA9779FG

[S5Rd5DA88
89BAC778CA3978AC79GCA

[S5Sd5DAAB
778AA7CBAC38AA7CBAC

[S5Sd5DAAC
778AA7CCAC38AA7CCAC

[S5cY5AGC>
987AC7AF7D3987AC7AF7Do8

[S5cY5EGFG
8B7AC77FE738B7AC787E7

[S5dP59>8G
89BAC9ABDC389BAC9G7DC

[S5dP59>GB
89BAC9ACDC

[S5dP59DBC
89BAC9BADC3978AC9FEDC

[S5dP5BBED
89BAC9E7DC389BAC9FBDC

[S5dP5DDCE
89BA9A9BFC389BA9AB8FC

[S5dP5DDCF
89BA9A9AFC389BA9ABGFC

[S5dP5GG9E
978A977EBB3978A979BBB

[S5dP5GG9F

[S5eQ58E>F
978AC7BE7D3978AC7CD7D

[S5eQ58EA9
89BAC7789G3987AC7779G

[S5eQ58EA>
89BAC7E77D389BAC7E87D

[S5ha58EAC
89BAA7A77E

[S5ha58EAD
89BAA7A87E

[S5ha58FAG
89BAA7AB7E

[S5ha58FB8
89BAA7AC7E

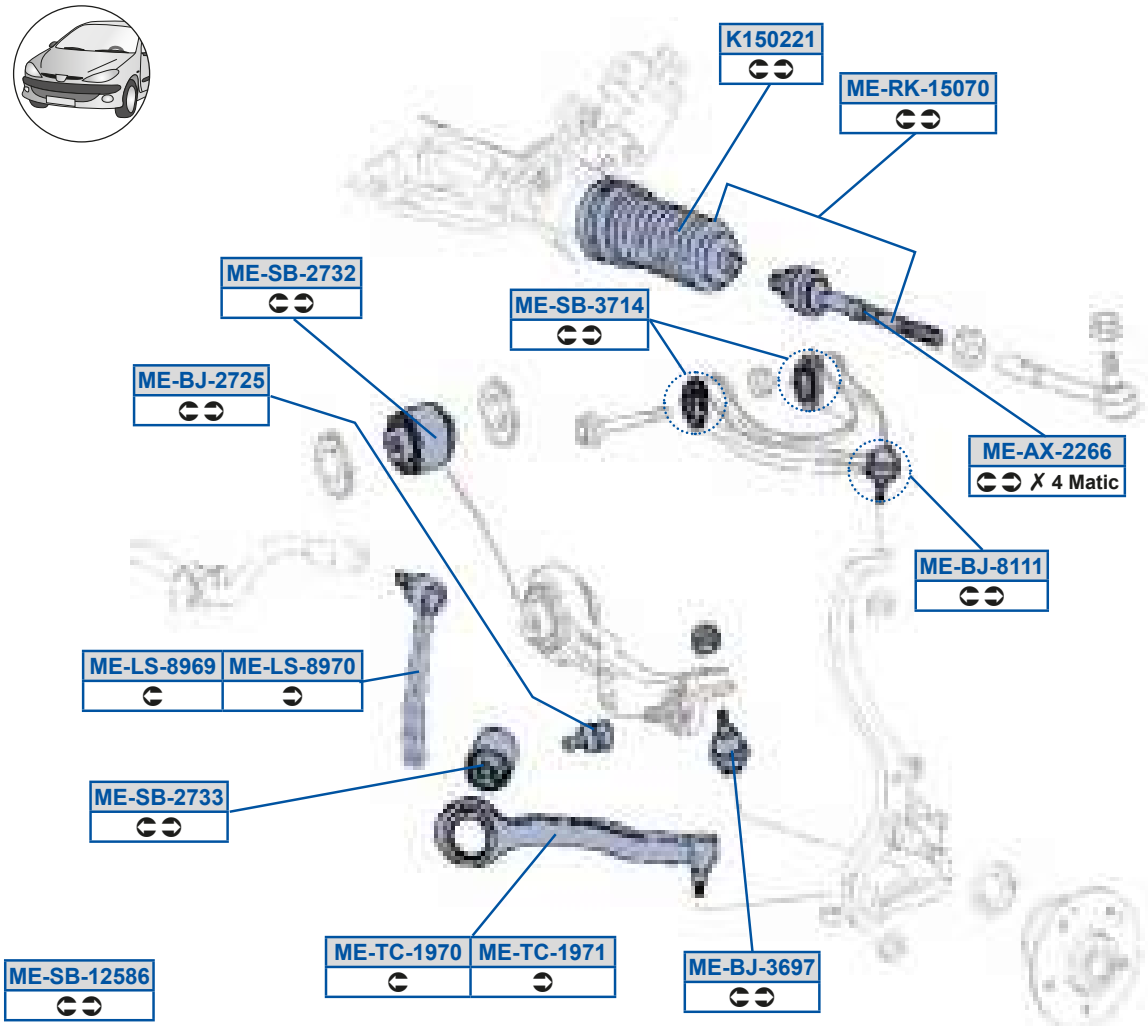
K150221
ME-RK-15070
ME-SB-2732
ME-SB-3714
ME-BJ-2725
ME-AX-2266
✗ 4 Matic
ME-BJ-8111
ME-LS-8969
ME-LS-8970
ME-SB-2733
ME-TC-1970
ME-TC-1971
ME-BJ-3697
ME-SB-12586

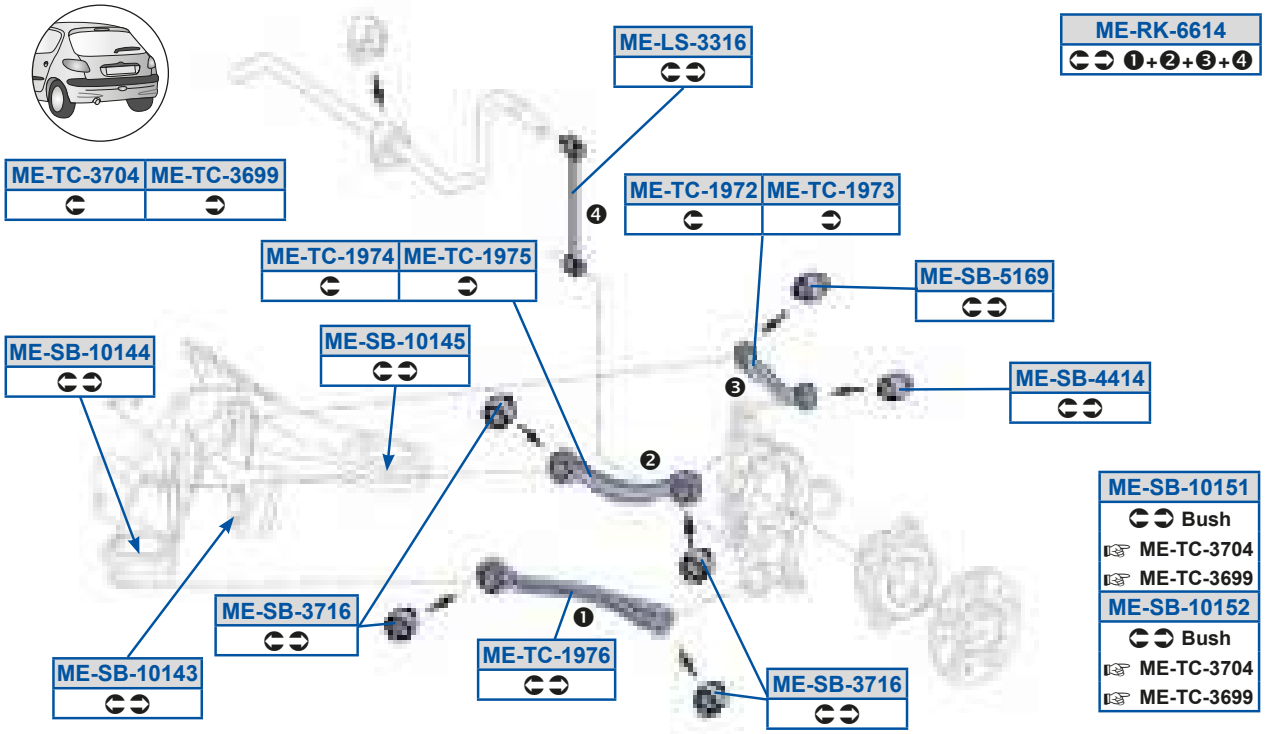
ME-LS-3316
ME-RK-6614
❶+❷+❸+❹
ME-TC-3704
ME-TC-3699
ME-TC-1972
ME-TC-1973
ME-TC-1974
ME-TC-1975
ME-SB-5169
ME-SB-10144
ME-SB-10145
ME-SB-4414
ME-SB-10151
Bush
ME-TC-3704
ME-TC-3699
ME-SB-10152
Bush
ME-TC-3704
ME-TC-3699
ME-SB-3716
ME-TC-1976
ME-SB-10143
ME-SB-3716

Y9C8>>9
997BDA79GD

[S5Oi 5>>DD
988AA79G7A3988AAF778C

[S5PX5>E>C
988A9A77DF3997A9A7ADF

[S5PX5ADGE
988AA779AC3988AA77BAC

[S5PX5F999
777AA7877E3988AA7GG7E

[S5Zd5AA9D
988A977FFG3988A97AAFG

[S5Zd5FGDG
9A7A977CFG

[S5Zd5FGE8
9A7A977DFG

[S5c Y59C8E8
988AA79G7A3988AAF778C

[S5c Y5DD9B

[S5dP5989BA
997AC979DC3997AC98ADC

[S5dP5989BB
988AC887B93988AC88AB9

[S5dP5989BC
9A7AC879B9

[S5dP5989C9
9A7AC77A9G /40

[S5dP5989C>
9A7AC77A9G /40

[S5dP59>CFD
988AAA9G8B

[S5dP5>EA>
988AAA888B

[S5dP5>EAA
988AAA878B3988AAA9C8B

[S5dP5AE9B
988AAA7F8B

[S5dP5AE9D
97BACA77BA397CAC97C7F

[S5dP5BB9B
988AC97FDC

[S5dP5C9DG
997AC9779E

[S5eQ59GE8
988AA788883988AA78C88

[S5eQ59GE9
988AA789883988AA78D88

[S5eQ59GE>
9A7AC79E7D

[S5eQ59GEA
9A7AC79F7D

[S5eQ59GEB
9A7AC7AC7D

[S5eQ59GEC
9A7AC7AD7D

[S5eQ59GED
9A7AC7977D

[S5eQ5ADGG
9A7AC77B9G

[S5eQ5AE8B
9A7AC77A9G

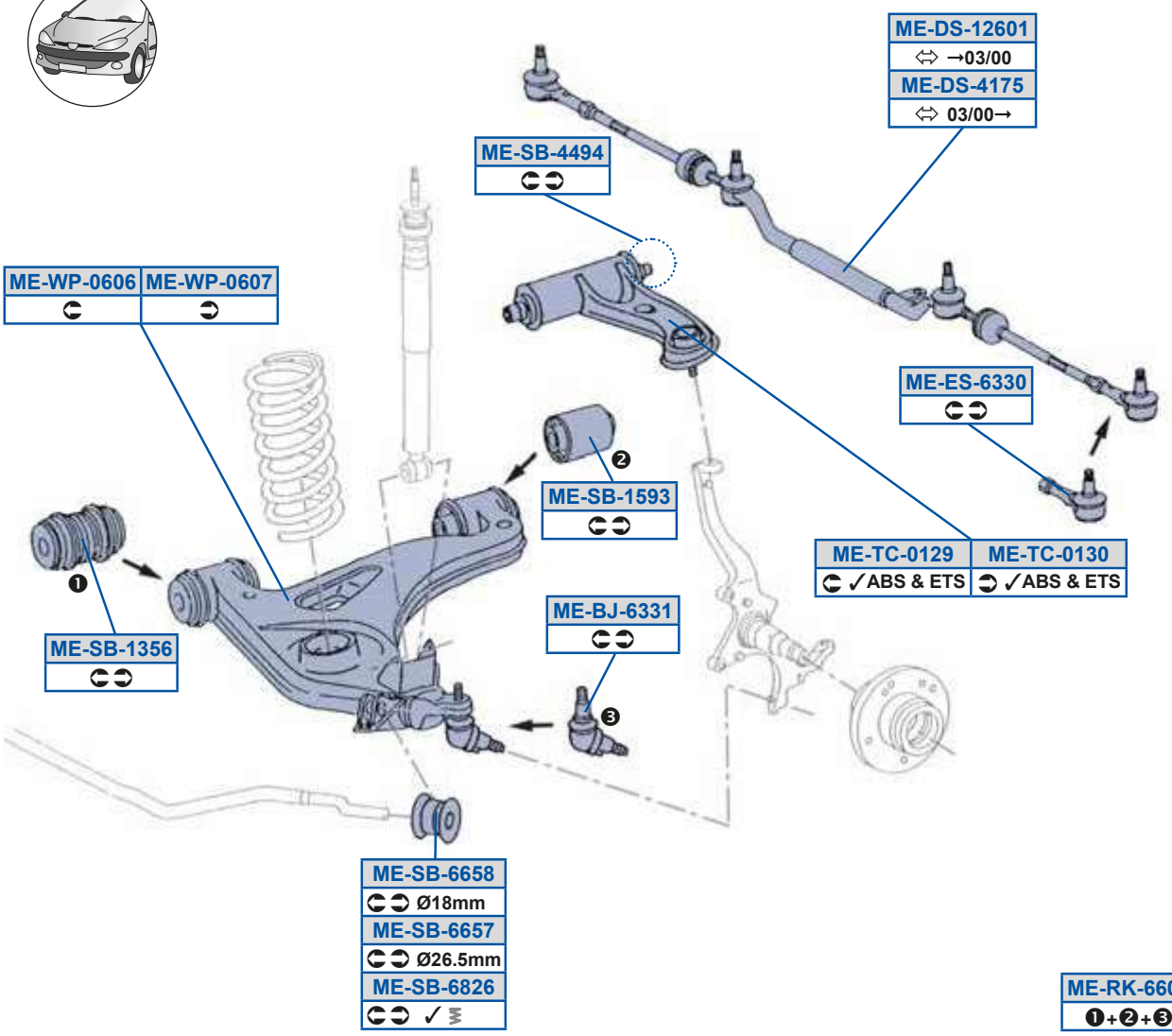
ME-DS-12601
⇔ →03/00
ME-DS-4175
⇔ 03/00→
ME-SB-4494
ME-WP-0606
ME-WP-0607
ME-ES-6330
ME-SB-1593
ME-TC-0129
✓ABS & ETS
ME-TC-0130
✓ABS & ETS
ME-BJ-6331
ME-SB-1356
ME-SB-6658
Ø18mm
ME-SB-6657
Ø26.5mm
ME-SB-6826
ME-RK-6603
❶+❷+❸

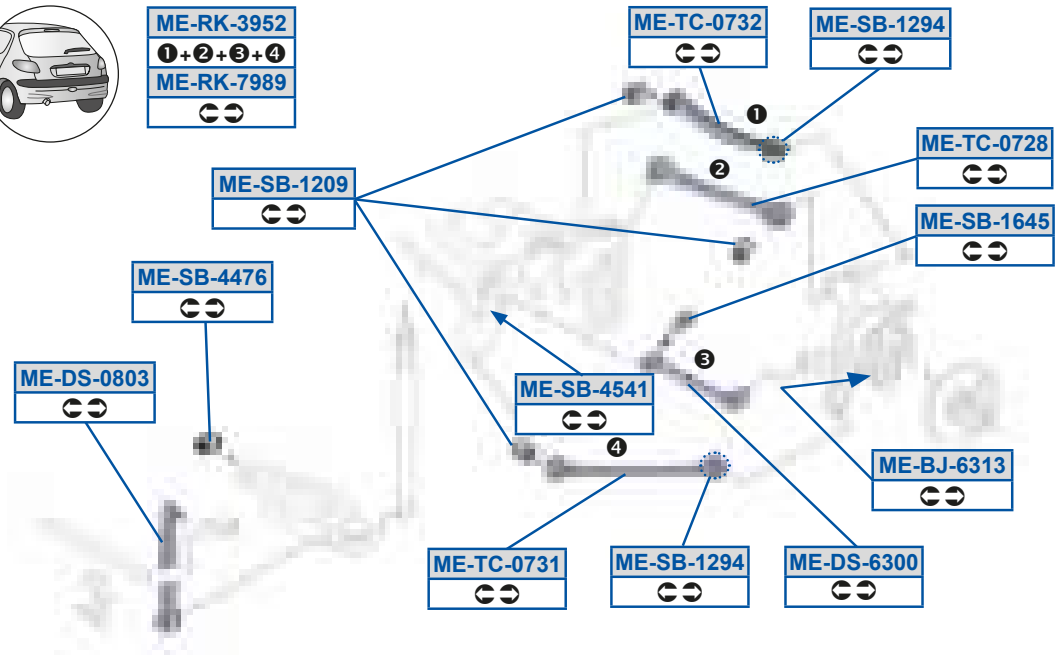
ME-RK-3952
❶+❷+❸+❹
ME-RK-7989
ME-TC-0732
ME-SB-1294
ME-TC-0728
ME-SB-1209
ME-SB-1645
ME-SB-4476
ME-DS-0803
ME-SB-4541
ME-BJ-6313
ME-TC-0731
ME-SB-1294
ME-DS-6300

[S5PX5DA9A
978AC9779E3997AC9799E

[S5PX5DAA9
979AAA779E3987AA777AC

[S5Rd58F8A
89BA9779FG

[S5Rd59>D89
8E7BDA778C

[S5Rd5B9EC
8E7BDA788C

[S5Rd5DA88
89BAC778CA3978AC79GCA

[S5Sd5DAA8
777AA7EBAC3778AA7EBAC

[S5cY5AGC>
987AC7AF7D3987AC7AF7Do8

[S5cY5DD8A

[S5cY5EGFG
8B7AC77FE738B7AC787E7

[S5dP59>8G
89BAC9ABDC389BAC9G7DC

[S5dP59>GB
89BAC9ACDC

[S5dP59ACD
979AAADE8B3979AAAFE8B

[S5dP59CGA
979AAADB8B3979AAAFB8B

[S5dP59DBC
89BAC9BADC3978AC9FEDC

[S5dP5BBED
89BAC9E7DC389BAC9FBDC

[S5dP5BBGB
979AAAEE8B

[S5dP5BCB9
89BAC77AB8389BAC7DB7F

[S5dP5DDCE
89BA9A9BFC389BA9AB8FC

[S5dP5DDCF
89BA9A9AFC389BA9ABGFC

[S5dP5DF>D
89BA9ACBFC

[S5eQ589>G
979 AA7 A7 7E

[S5eQ589A8
979 AA7 97 7E

[S5eQ58E>F
978AC7BE7D3978AC7CD7D

[S5eQ58EA9
89BAC7789G3987AC7779G

[S5eQ58EA>
89BAC7E77D389BAC7E87D

[S5ha58D8D
8E7AA7787E3979AA79D7E

[S5ha58D8E
8E7AA7797E3979AA79E7E

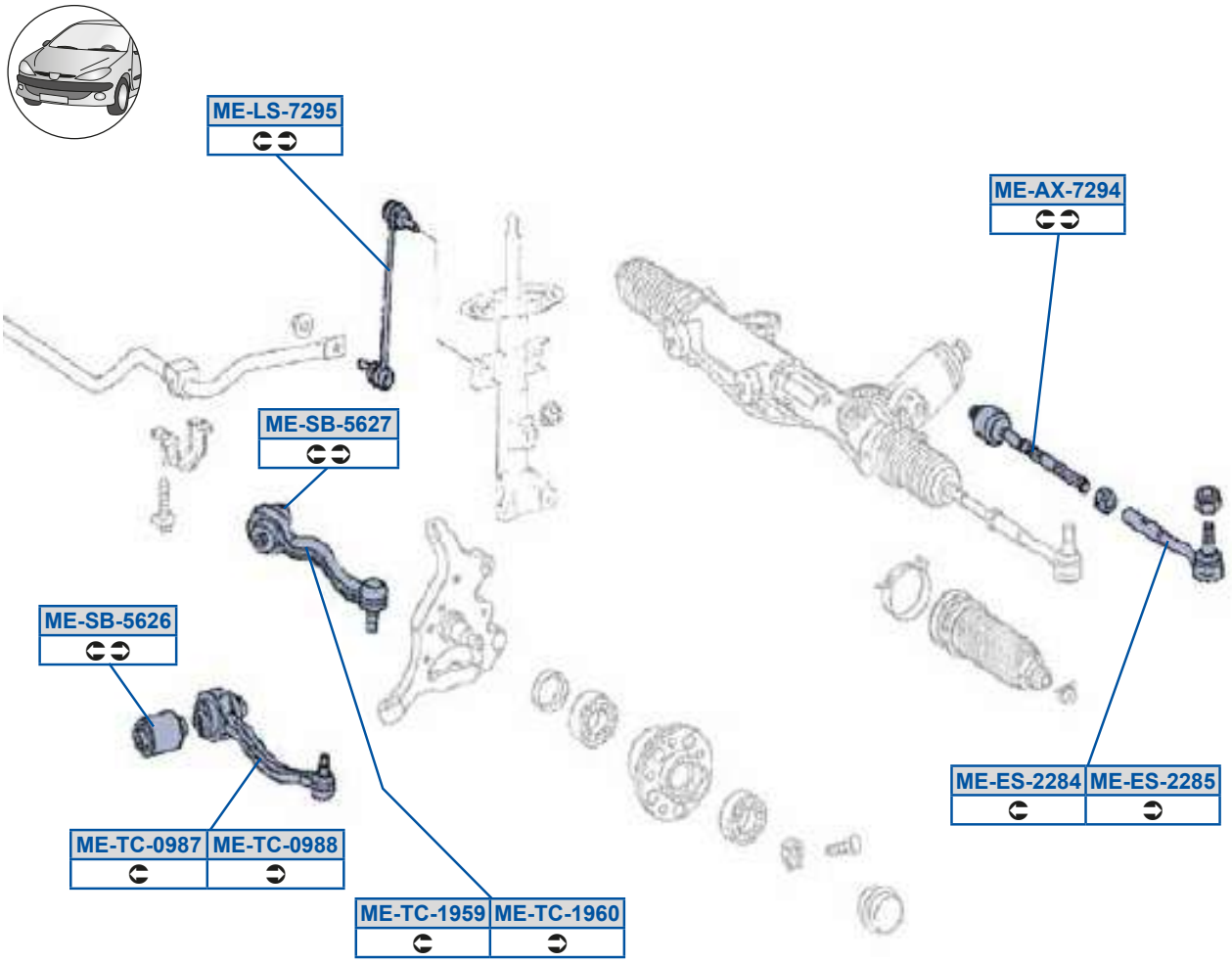

ME-SB-7965

ME-SB-10142

ME-SB-12505

[S5Oi 5E>GB
8E8AAF778C

[S5dP5EGDC
89GAC898B9

[S5Sd5>>FB
97AAA78G7A397AAA79A7A

[S5eQ58GFE
97AAA78G88397AAA7AA88

[S5Sd5>>FC
97AAA7977A397AAA79B7A

[S5eQ58GFF
97AAA79788397AAA7AB88

[S5Zd5E>GC
8E8A9A778E

[S5eQ59GCG
97AAA77888397AAA78D88

[S5dP5989B>
97AAC878B9

[S5eQ59GD8
97AAA77988397AAA78E88

[S5dP59>C8C
8E8AC878B9397AAC87EB9

[S5dP5CD>D
97AAAA7A8B397AAAA7G8B

[S5dP5CD>E
97AAAA798B397AAAA878B

dacWJeSc ;5 P 0G894G8;1	897GC 8C78D	dacWJeSc ;5 P 0G894G8;1	897GC 8C78D
dacWJeSc ;5 a t y 7QÉt é 0G894G8;1	897GC 8C78D	dacWJeSc A5 P 0G8A1	897GC 8C78D
dacWJeSc A5 P 0G8A1	897GC 8C78D	dacWJeSc A5 a t y 7QÉt é 0G8A1	897GC 8C78D
dacWJeSc B5 P 0G8B1	8;7GD 8C78D	dacWJeSc B5 P 0G8B1	8;7GD 8C78D
dacWJeSc B5 a t y 7QÉt é 0G8B1	8;7GD 8C78D	dacWJeSc C a t y 7QÉt é 0G8C1	8B789 8C78D
dacWJeSc R v 0G8C1	8B789		

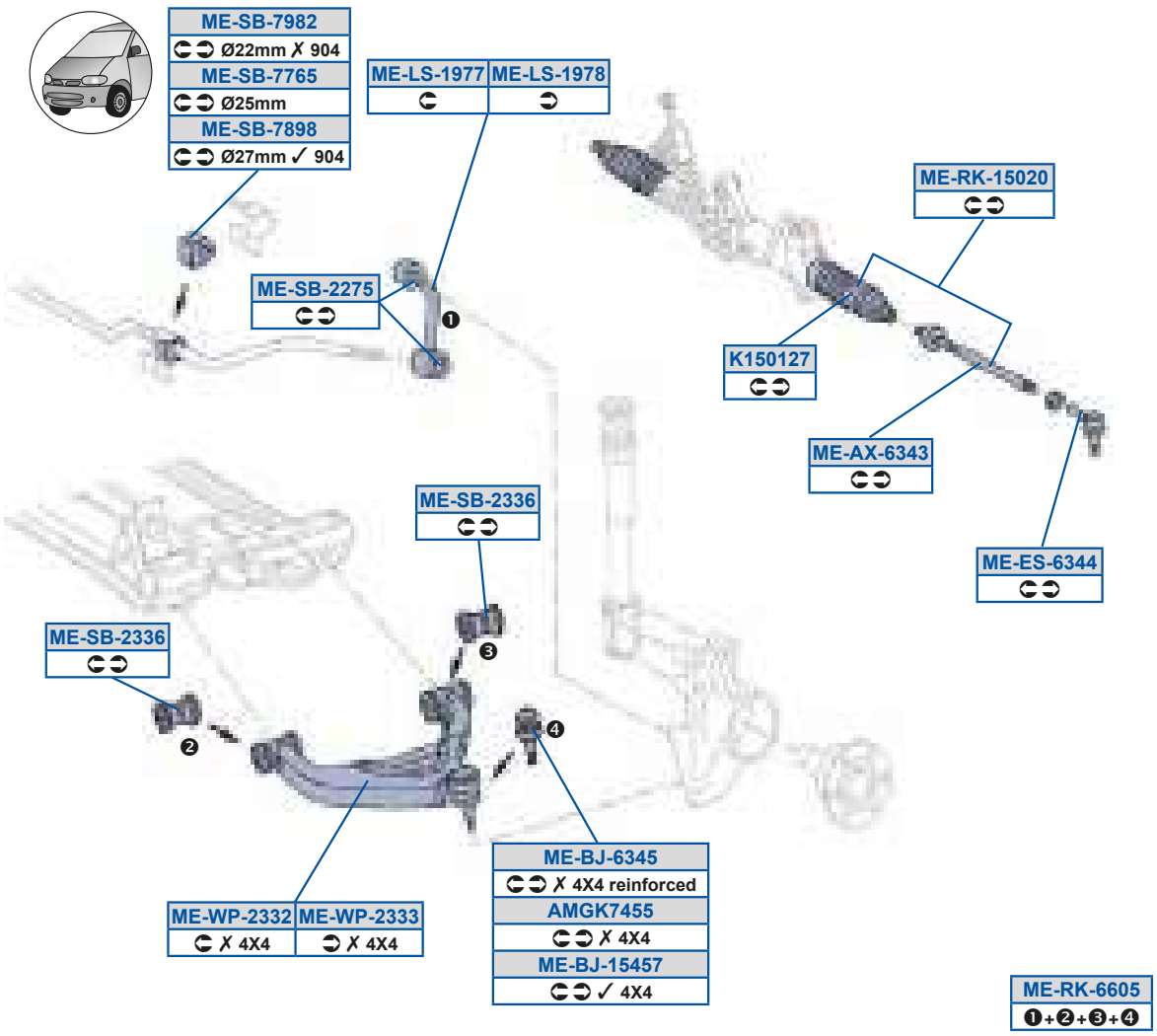

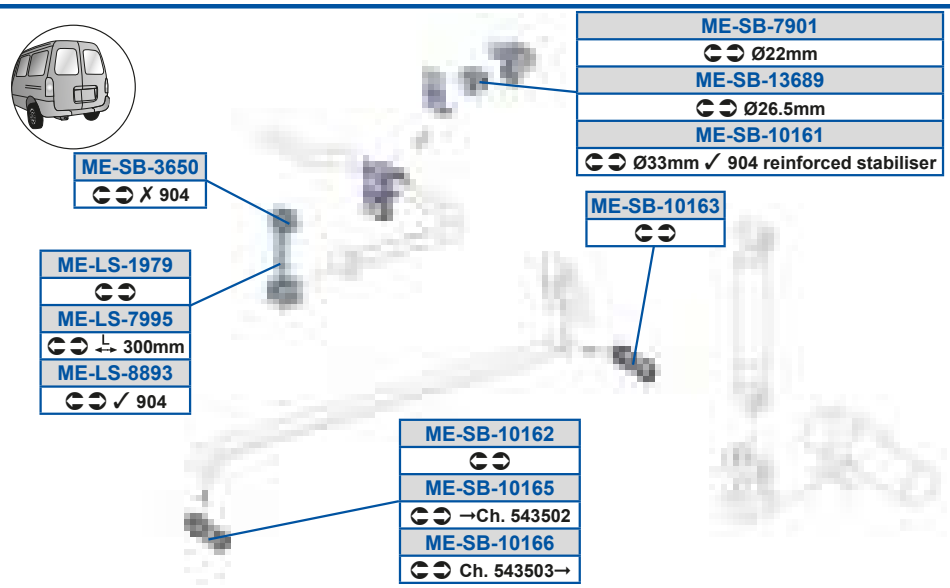

O[UYEBCC
G789997D9E3G78AAA7D9E

Y9C89>E
G78BD7CC77

[S5Oi 5DABA
G78BD778CC3G78BD779CC

[S5PX59CBCE
G78AAA8A9E

[S5PX5DABC
9R7B7EAD803G78AAA7D9E

[S5Sd5DABB
9R7B99F883G78BD777BF

[S5Zd59GEE
G78A9779FG

[S5Zd59GEF
G78A977AFG

[S5Zd59GEG
9R7C88A9G3G78A9777FG

[S5Zd5EGGC
G78A977DFG

[S5Zd5FFGA
C88FDGD003G78A977CFG

[S5c Y59C8>8
G78BD778CC3G78BD779CC

[S5c Y5DD8C

[S5dP5989D9
G7BA9D87F8

[S5dP5989D>
G78A9B78C7

[S5dP5989DA
G78A9B7AC7

[S5dP5989DC
777A9879C73777A987BC7

[S5dP5989DD
C88FE9G003D88A9B77C7

[S5dP59ADFG
G78A9D78F830G78A9D78F8

[S5dP5>>EC
G78A9A79FC

[S5dP5>AAD
9R7C888E83G78AAA798B

[S5dP5ADC8
D78A987AC7

[S5dP5EEDC
G7BA9A77FC

[S5dP5EFGF
G7BA9D7FF8

[S5dP5EG89
G78A9D77F8

[S5dP5EGF>
G78 A9A 78 FC

[S5h a5>AA>
9R7B7E7983G78AA78D7E

[S5h a5>AAA
G78AA78E7E3G78AA78G7E

dacWeSc A4C a t y 7QÉt é 0G8D1	8D78D	dacWeSc A4C5 P 0G8D1	8D78D
dacWeSc A4C5 P 0G8D1	8D78D	dacWeSc A4C5 a t y 7QÉt é 0G8D1	8D799
dacWeSc A5 P 0G8D1	8D78D	dacWeSc A5 P 0G8D1	8D78D
dacWeSc A5 a t y 7QÉt é 0G8D1	8D78D	dacWeSc B4D5 P 0G8D1	8D78D
dacWeSc B4D5 a t y 7QÉt é 0G8D1	8D78D	dacWeSc C5 P 0G8D1	8D78D
dacWeSc C5 P	8D78D	dacWeSc C5 a t y 7QÉt é 0G8D1	8D78D

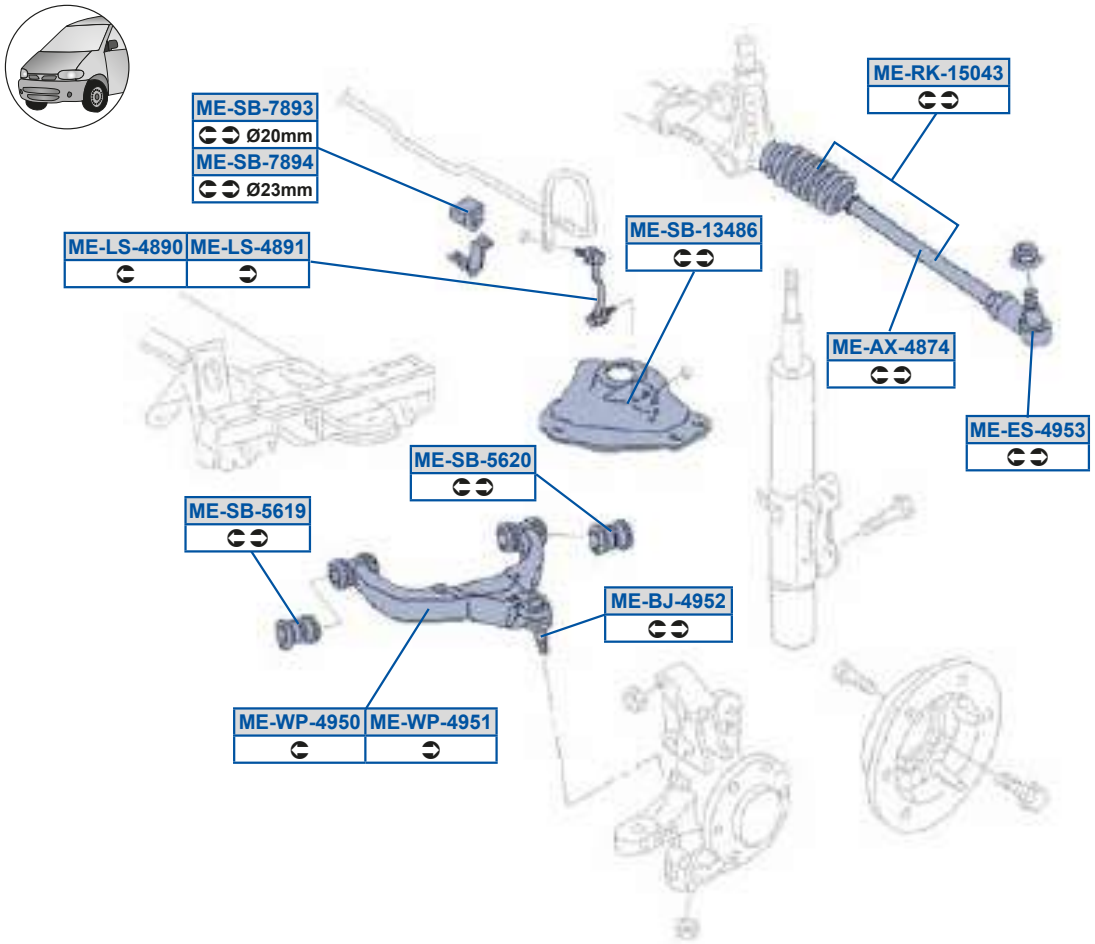

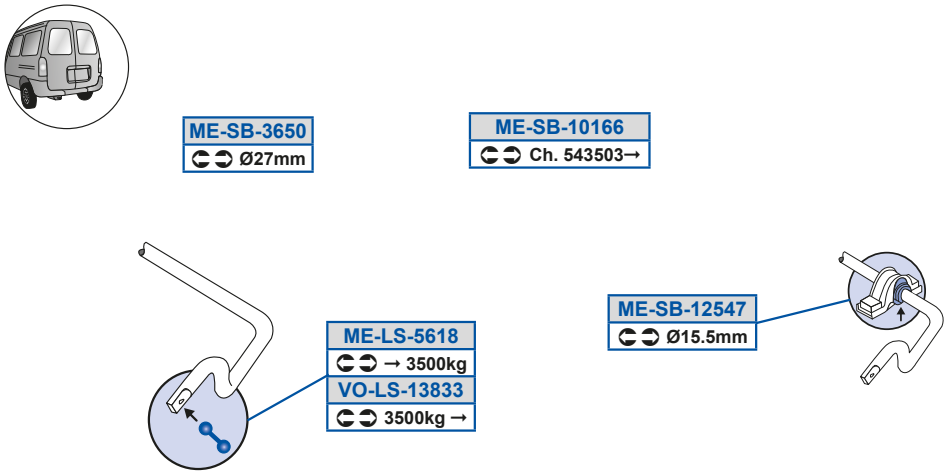

[S5Oi 5BFEB
G7DBD777CC3G7DBD778CC

[S5dP59>CBE
G7DA9D7AF83G7DA9D7EF8

[S5h a5BGC9
G7DAA7B87E

[S5PX5BGC>
G7DAA7B77E3G7DAA7B87E

[S5dP59ABFD
G7DA9A7C97

g_ 5Zd59AFAA
G7DA978BFG

[S5Sd5BGCA
G7DBD777BF3G7DBD778BF

[S5dP5ADC8
D78A987AC7

[S5Zd5BFG8
G7DA978EFG

[S5dP5CD9G
G7DAAA778B

[S5Zd5BFG9
G7DA978FFG

[S5dP5CD>8
G7DAAA788B

[S5Zd5CD9F
G78A977DFG3G7DA978AFG

[S5dP5EFGA
G7D A9A 8B FC

[S5c Y59C8BA
G7DBD777CC3G7DBD778CC

[S5dP5EFGB
G7DA9A8DFC

[S5dP5989DD
C88FE9G003D88A9B77C7

[S5h a5BGC8
G7DAA7B77E30G7DAA7B77E

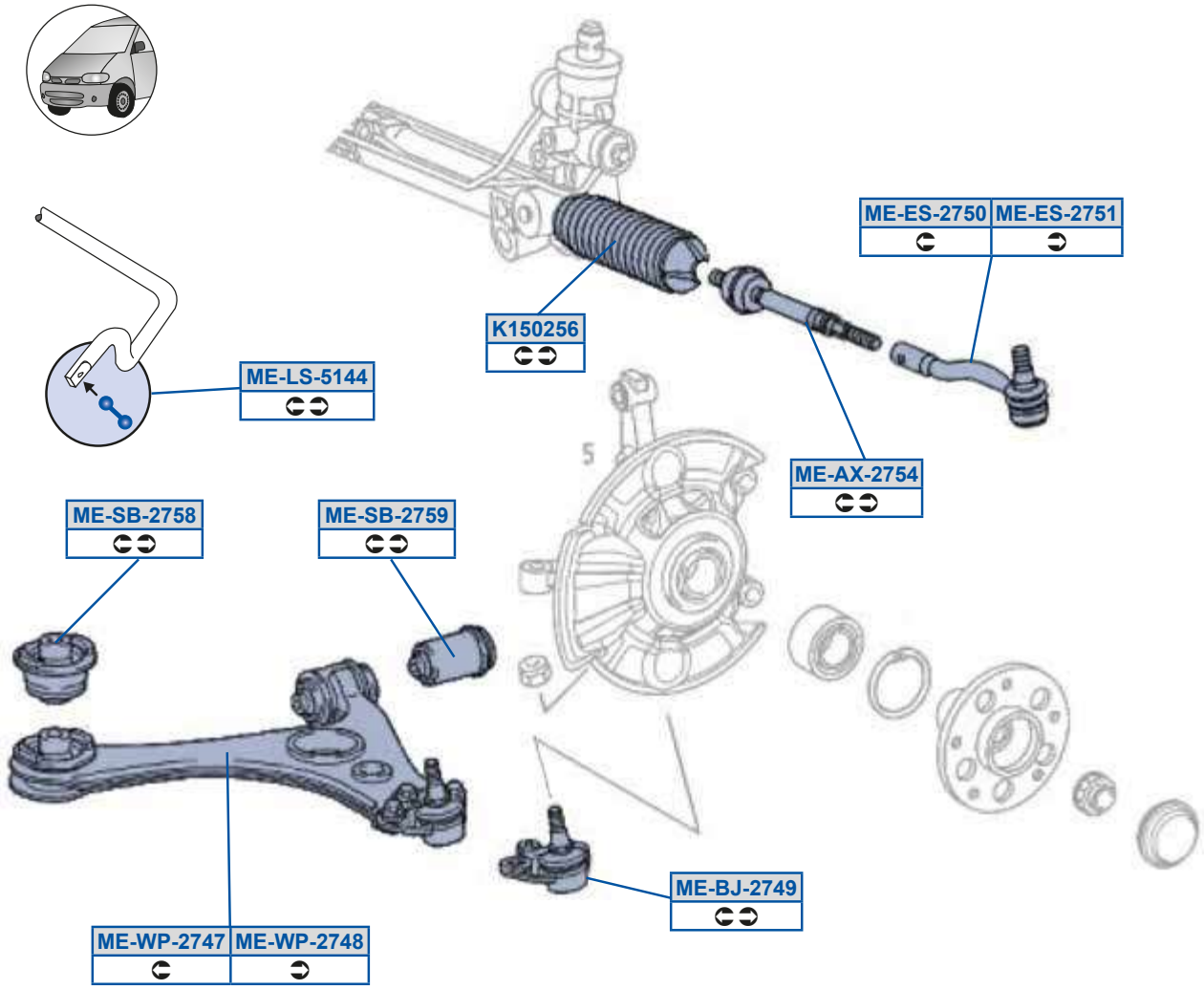
ME-ES-2750
ME-ES-2751
K150256
ME-LS-5144
ME-AX-2754
ME-SB-2758
ME-SB-2759
ME-BJ-2749
ME-WP-2747
ME-WP-2748

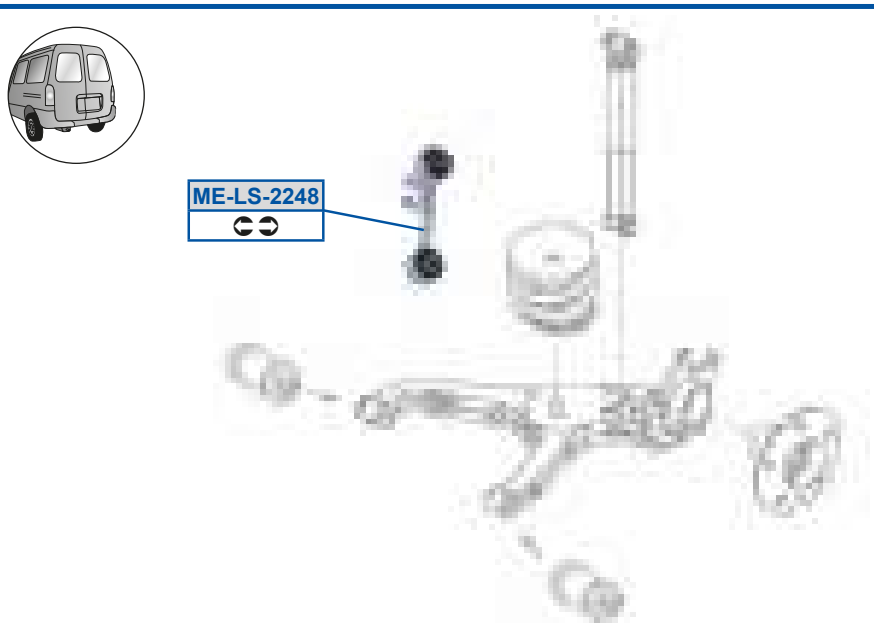
ME-LS-2248

Y9C8>CD
B8BBD77F77

[S5dP5>ECG
B8BAAA788B

[S5Oi 5>ECB
B8BAA777AC3B8BBD7797C

[S5h a5>EBE
B8BAA7777E3B8BAA77A7E

[S5PX5>EBG
B8BAAA779E3B8BAAA789E

[S5h a5>EBF
B8BAA7787E3B8BAA77B7E

[S5Sd5>EC8
B8BAAA79AC3B8BBD7777C

[S5Sd5>EC9
B8BAAA78AC3B8BBD7787C

[S5Zd5>>BF
DAFA9D778D3DAFA9D788D

[S5Zd5C9BB
B8BA9778FG3B8BA9779FG

[S5dP5>ECF
B8BAAA778B

[Sc QSRSd5PS] k

g5QZ0dd 0DAF7; 1	8; 7GD 8E78A	gW_ P 0DAF1	8A7GE 8E78A
gW_ P 0DAF1	8; 7GD 8E78A		

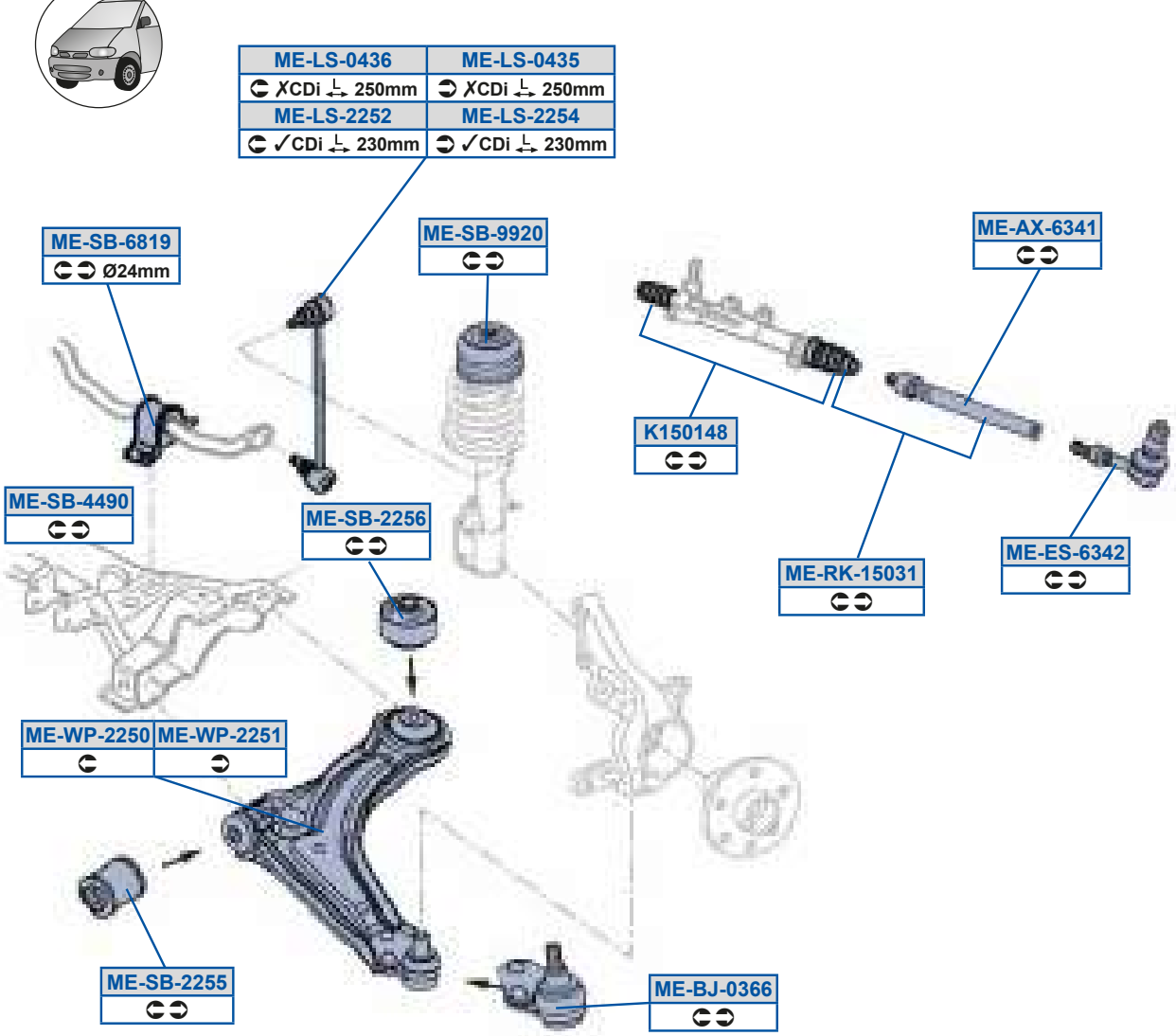

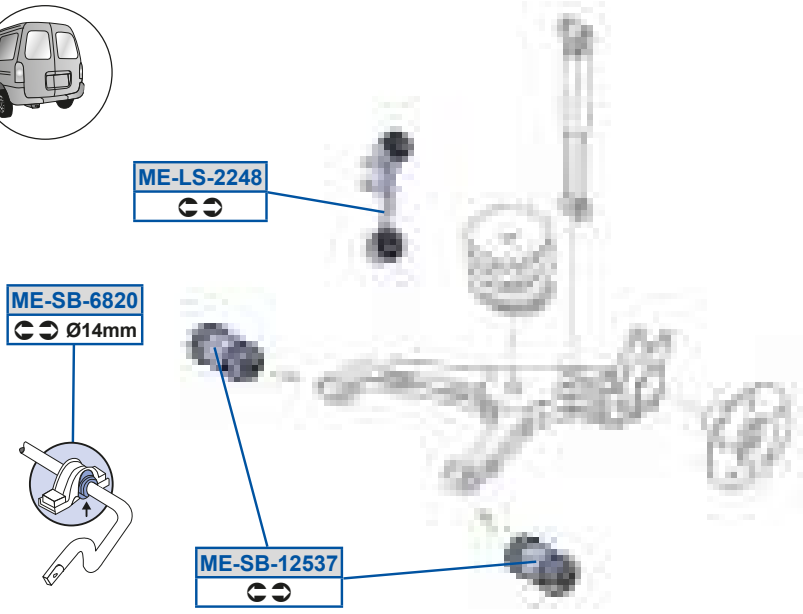

MOOG

Y9C89BF
G78BD977GD3G78BD979GD

[S5Zd5>>CB
DAFA9A7CDF

[S5dP5GG>8
DAFA9A7B97

[S5Oi 5DAB9
DAFBD777CC3DAFBD7797C

[S5c Y59C8A9
DAFBD777CC3DAFBD7797C

[S5h a5>>C8
DAFAA777873DAFAA77C87

[S5PX58ADD
DAFAA7779E3DAFAAA779E

[S5dP59>CAE
DAFAC97BC73DAFAC97DC7

[S5h a5>>C9
DAFAA778873DAFAA77D87

[S5Sd5DAB>
DAFBD777BF

[S5dP5>>CC
DAFAAA778B3DAGAAA798B

[S5Zd58BAC
DAFA9A7ADF

[S5dP5>>CD
DAFAAA7F8B

[S5Zd58BAD
DAFA9A79DF

[S5dP5BBG8
DAFA8E7A893DAFA8E7G89

[S5Zd5>>BF
DAFA9D778D3DAFA9D788D

[S5dP5DF9G
DAFA9A79FC

[S5Zd5>>C>
DAFA9A7BDF

[S5dP5DF>8
DAFA9D79F8

[Sc QSRSd5PS] k

gW_ P Ch DAG1	8G78A	gW_ P Ch DAG1	8G78A
gW_ 7[We_ P Ch DAG1	8D78B 8E78F		

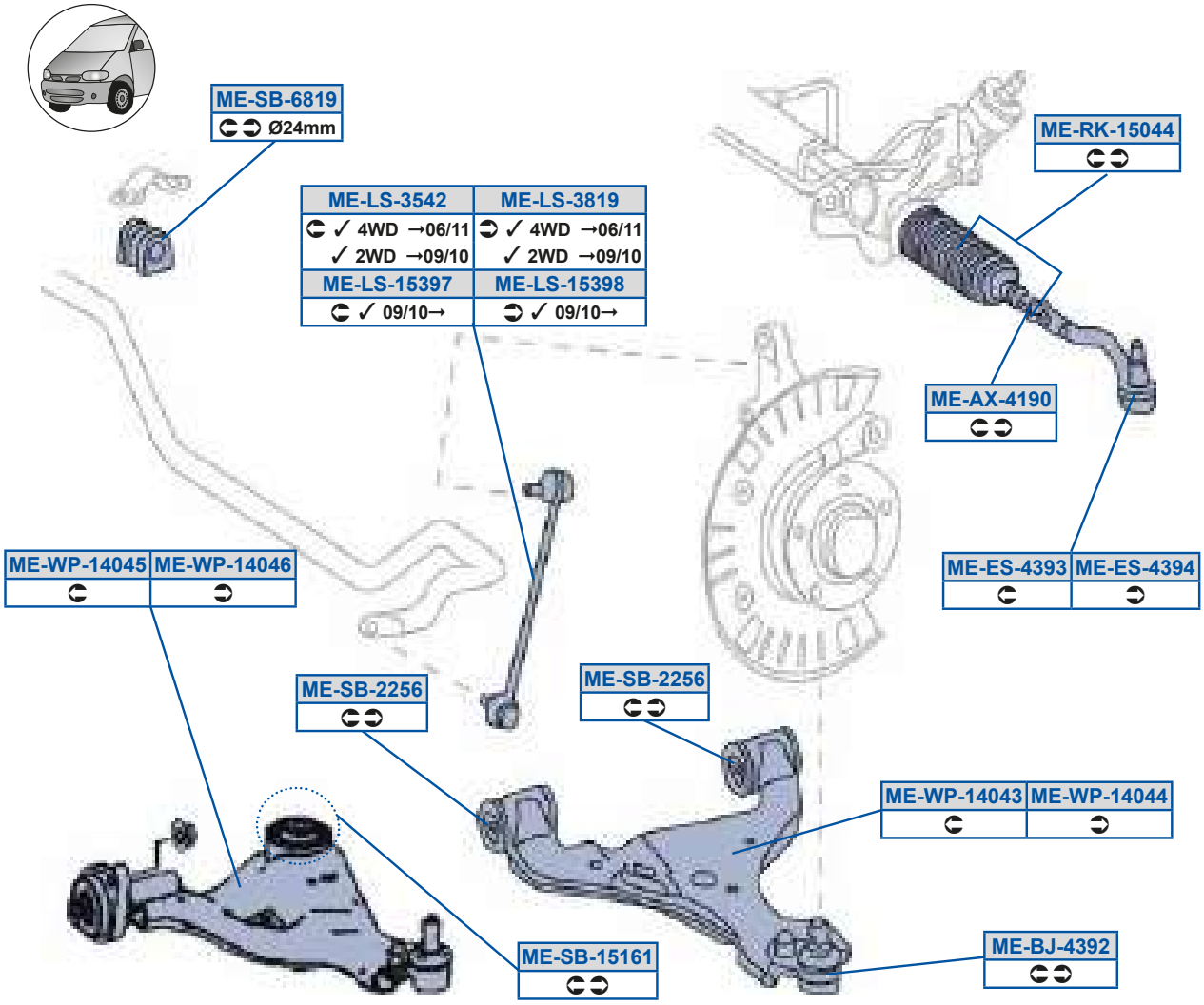

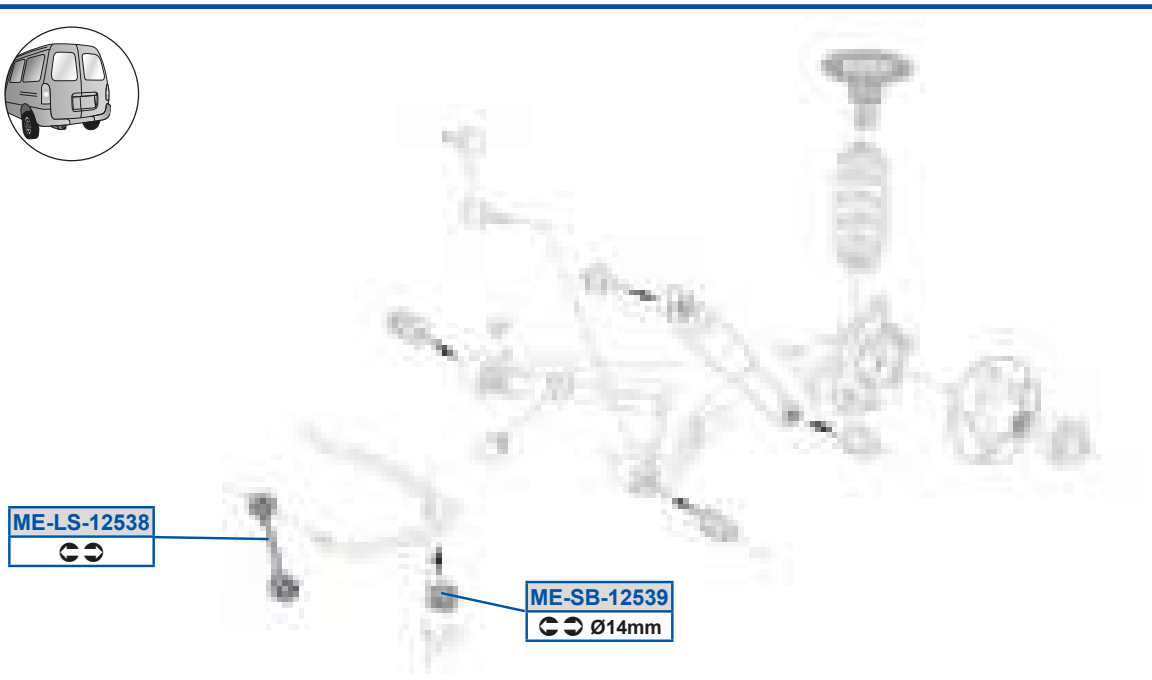

[S5Oi 5B9G8
DAGBD777CC3DAGBD779CC

[S5Zd5AF9G
DAGA9778FG3DAGA977AFG

[S5h a59B8BC
DAGAA7897E3DAGAA78B78

[S5PX5BAG>
DAGAAA799E

[S5c Y59C8BB
DAGBD777CC3DAGBD779CC

[S5h a59B8BD
DAGAA78A7E3DAGAA78C78

[S5Sd5BAGA
DAGBD777BF3DAGBD77BBF

[S5dP59>CAG
DAGA9D87F8

[S5Sd5BAGB
DAGBD77ABF3DAGBD77CBF

[S5dP59C9D9
DAGAAA7 8B3DAGAAA888B

[S5Zd59>CAF
DAGA9D798D3DAGA9D7D8D

[S5dP5>>CD
DAFAAA7F8B

[S5Zd59CAGE
DAGA977GFG

[S5dP5DF9G
DAFA9A79FC

[S5Zd59CAGF
DAGA9787FG

[S5h a59B8BA

[S5Zd5ACB>
DAGA9777FG3DAGA9779FG

[S5h a59B8BB

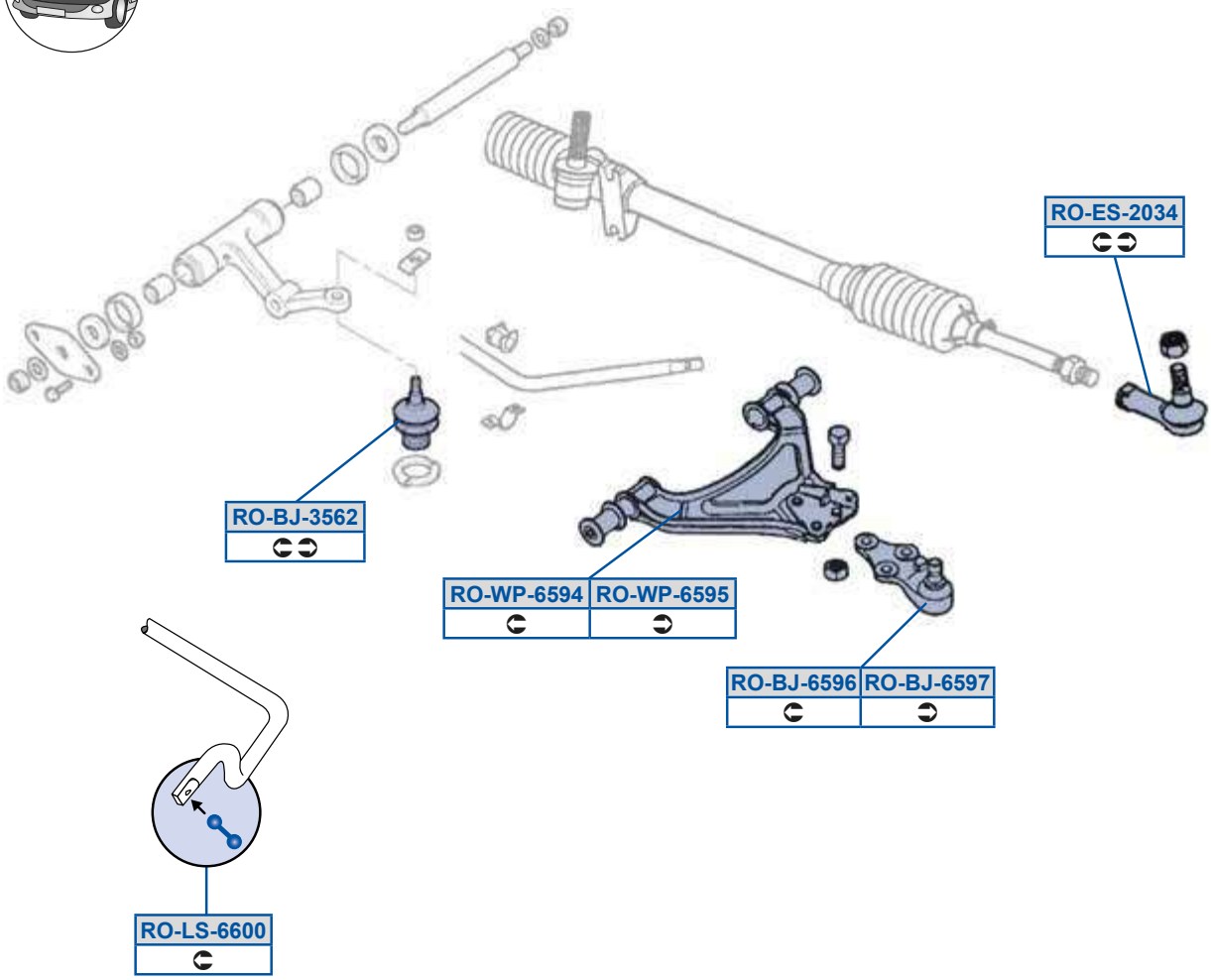
RO-ES-2034
RO-BJ-3562
RO-WP-6594
RO-WP-6595
RO-BJ-6596
RO-BJ-6597
RO-LS-6600

c_ 5PX5ACD>
UoX9CE

c_ 5PX5DCGD
UoXBGE

c_ 5PX5DCGE
UoXBGF

c_ 5Sd5>8AB
UoXF9E

c_ 5Zd5DD88
nPa 877888

c_ 5h a5DCGB
nPX8787E7

c_ 5h a5DCGC
nPX8787DG

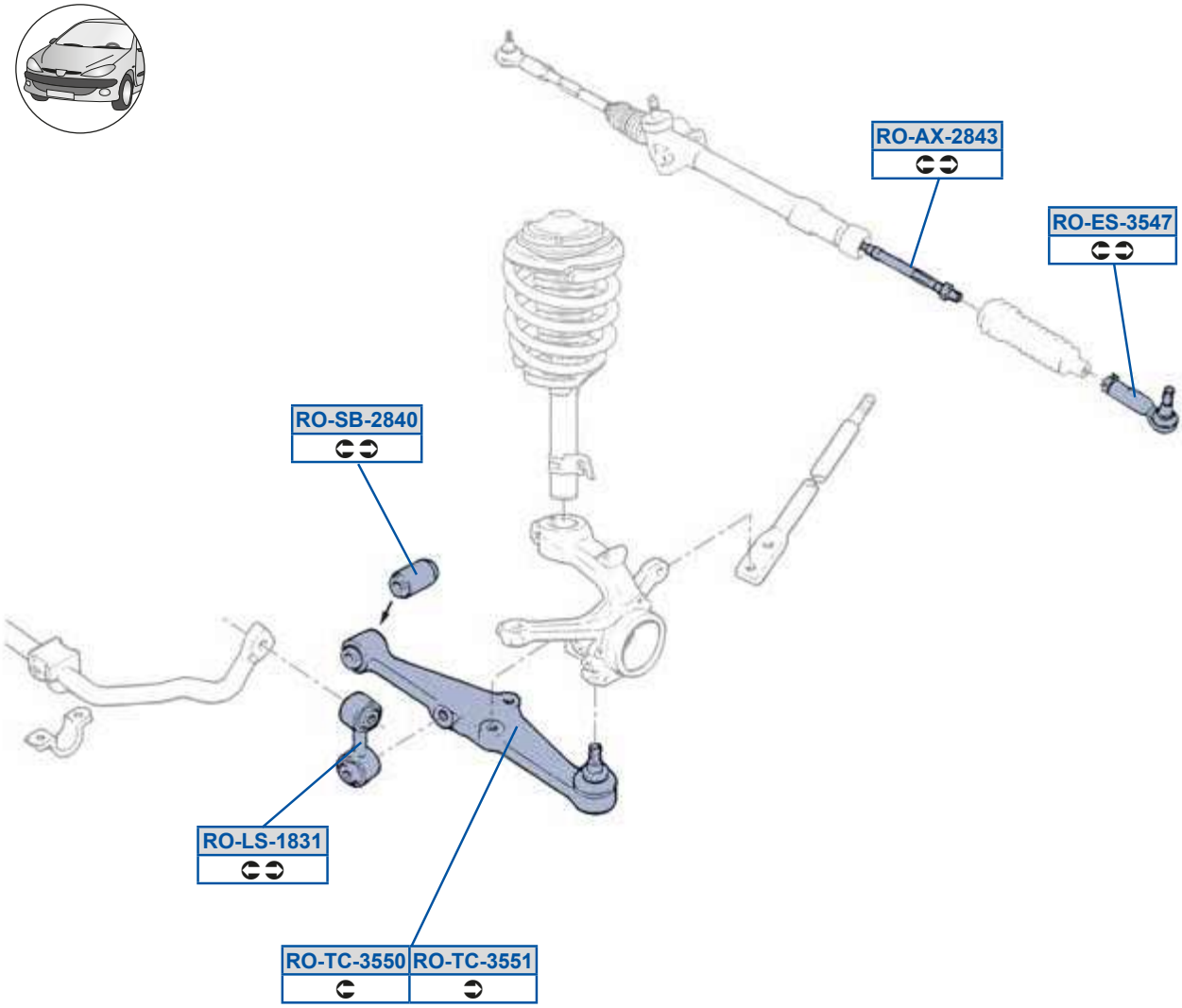
RO-AX-2843
RO-ES-3547
RO-SB-2840
RO-LS-1831
RO-TC-3550
RO-TC-3551

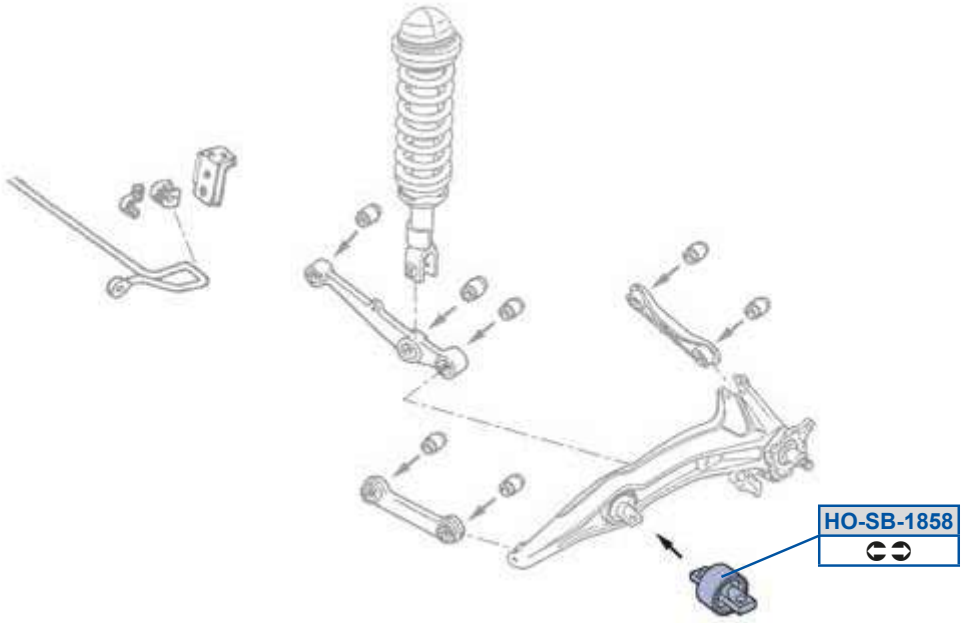
HO-SB-1858

V_5dP59FCF
nU 8777E

c_5Oi 5>FBA
Uo 88E7

c_5Sd5ACBE
UoX87883I XP877897

c_5Zd59FA9
SUi 8DD9

c_5dP5>FB8
SUi 8DEA

c_5eQ5ACC8
UoX9FD

c_5eQ5ACC9
UoX9FE

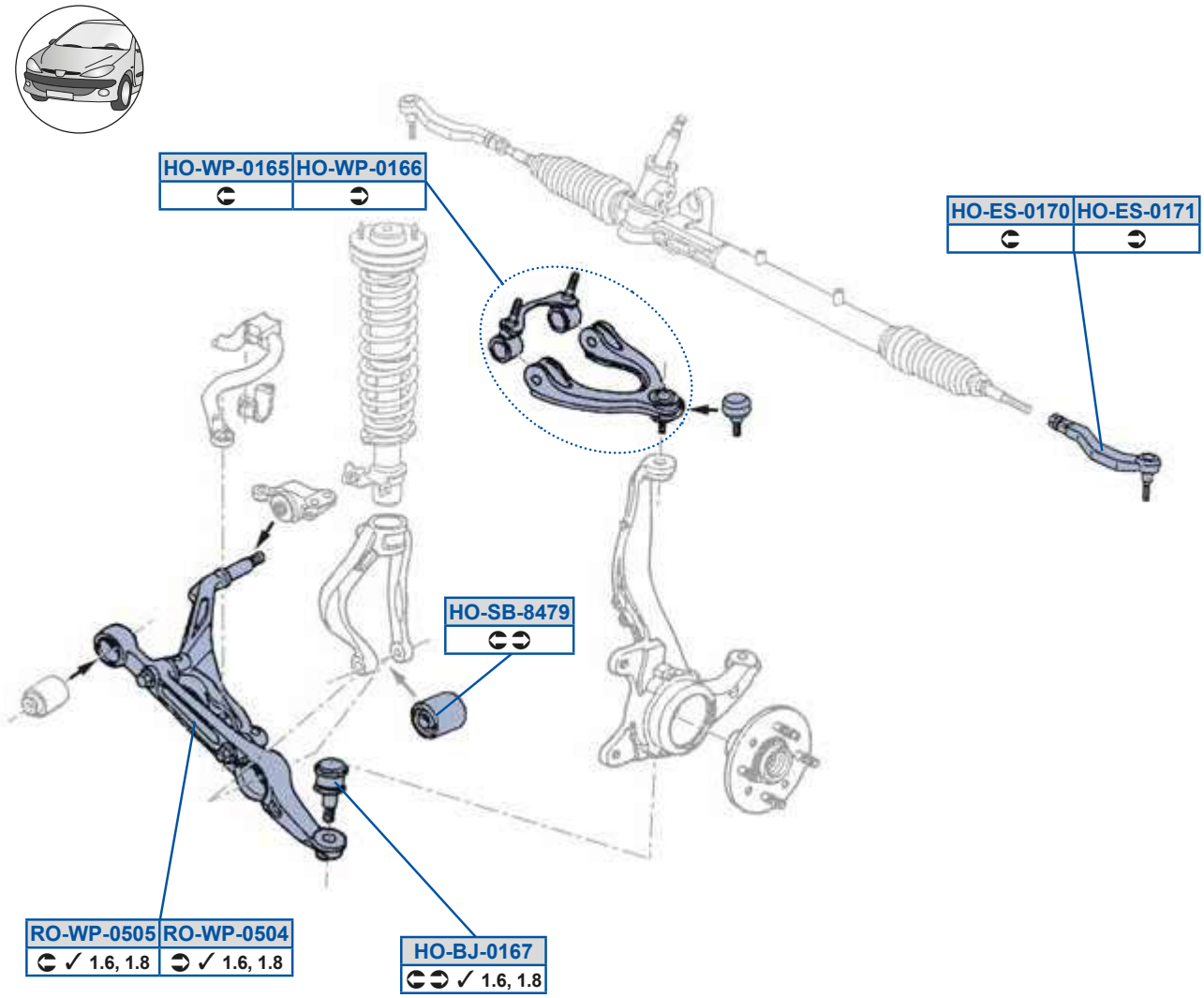
HO-WP-0165
HO-WP-0166
HO-ES-0170
HO-ES-0171
HO-SB-8479
RO-WP-0505
RO-WP-0504
✓ 1.6, 1.8
✓ 1.6, 1.8
HO-BJ-0167
✓ 1.6, 1.8

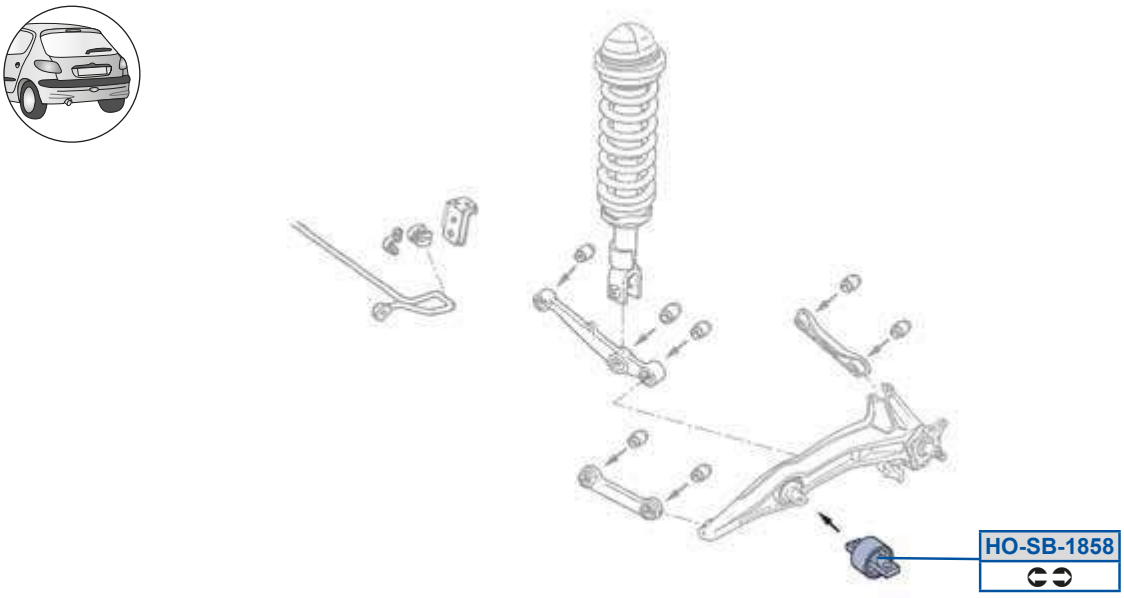
HO-SB-1858

V_5PX589DE
UoXBGG

V_5Sd589E8
UoXBGC

V_5Sd589E9
UoXBGD

V_5dP59FCF
nU 8777E

V_5dP5FBEG
nP 877DF7

V_5h a589DC
UoXBFC

V_5h a589DD
UoXBFD

c_5h a58C8B
UoXFAC

c_5h a58C8C
UoXFAD

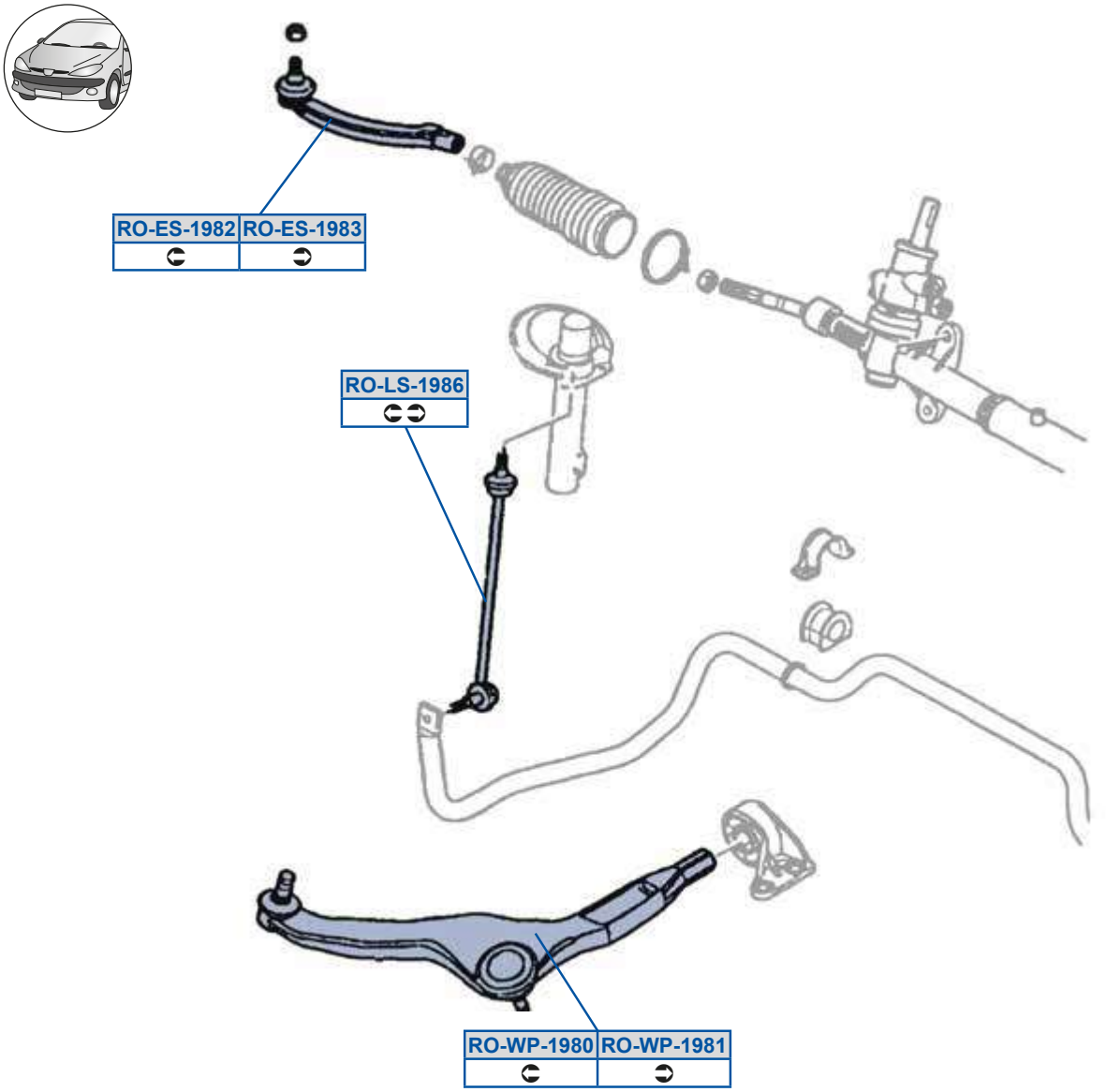
RO-ES-1982
RO-ES-1983
RO-LS-1986
RO-WP-1980
RO-WP-1981

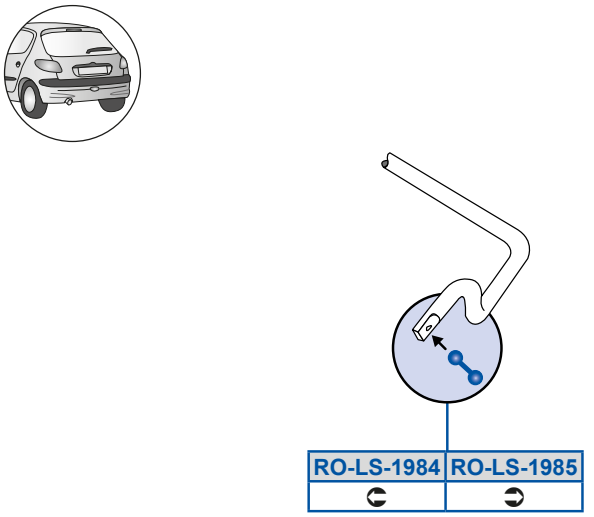
RO-LS-1984
RO-LS-1985

c_ 5Sd59GF>
UoXFEE3I XP8778G7

c_ 5Sd59GFA
UoXFEF3I XP8778F7

c_ 5Zd59GFB
nUR877CE8

c_ 5Zd59GFC
nUR877CD8

c_ 5Zd59GFD
nPa 8779B7

c_ 5h a59GF8
UoX8778

c_ 5h a59GF9
UoX8777

[WW

[WWOc C84c CA1	8D789 8G78D	[WWQ x éu x Oc C; 1	8E78B 9978E

[z zOWl c C84c C>4c CAn

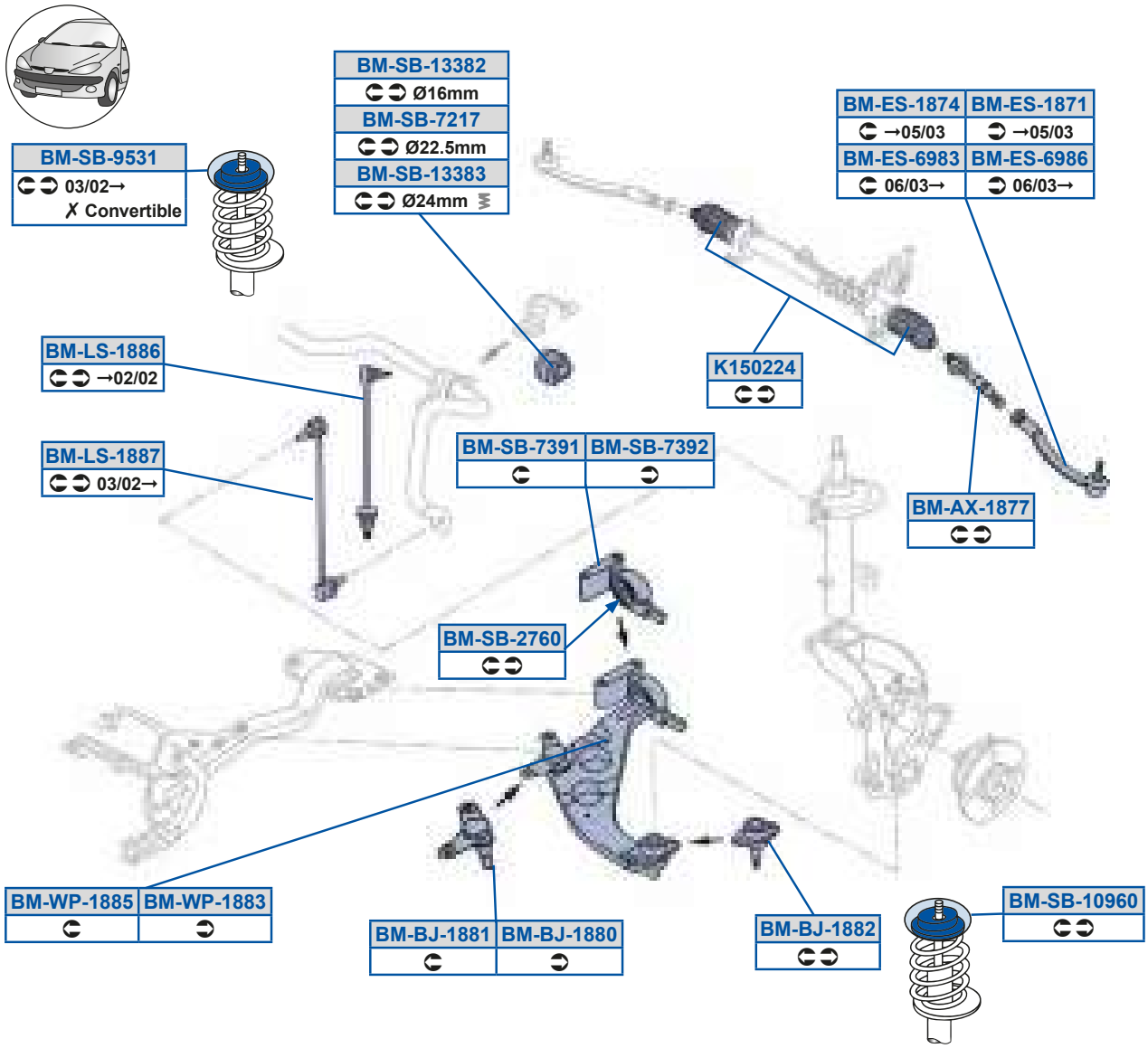

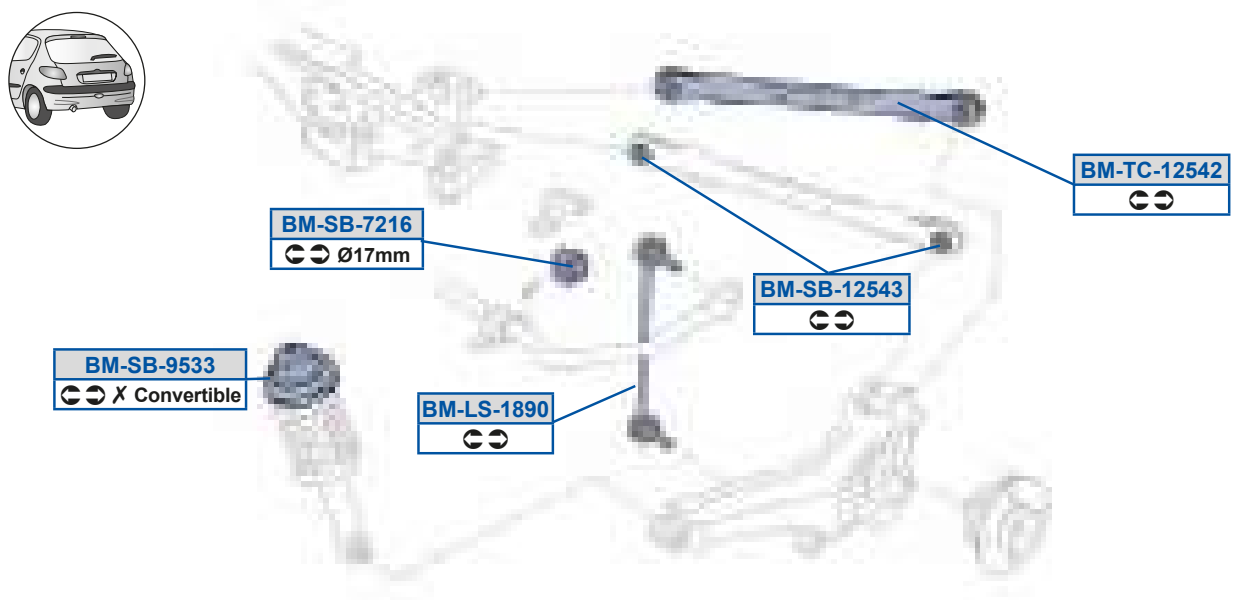

[WW

MOOG

P[5Oi 59FEE
A988DECBCDAB /40

P[5Zd59FFD
A8AC8C7EGFG

P[5dP5E>9D
AACCDECD8C8

P[5h a59FFC
A889B78CE7E3A889DECDGFG

P[5PX59FF8
A887DEEGBAF3A889DECAGG9

P[5Zd59FFE
A8ACDECGCAE3A8ACDEEFFA8

P[5dP5E>9E
A8ACDECE8BD

Y9C8>>B
A98ADECDECE

P[5PX59FF9
A887DEEGBAE3A889DECAGG8

P[5Zd59FG8
AAC7DEE9EFG3AAC7DEF88AA

P[5dP5EAG9
A889DECECD8

P[5PX59FF>
A889DECDA7G3A889DEFABBA

P[5dP598GD8
A8A7DECFA7G

P[5dP5EAG>
A889DECECD9

P[5Sd59FE9
A998DECBCDD

P[5dP59>CBA
AAA98BG77FC /40

P[5dP5GCA9
A8AADECGBGF

P[5Sd59FEB
A998DECBCDC

P[5dP59AAF>
A8ACDECE7DG

P[5dP5GCAA
AAC9DECB89A

P[5Sd5DGFA
A98ADED8CCG

P[5dP59AAFA
A8AC8C7EGGA3A8ACDECBF87

P[5eQ59>CB>
AAA98BG77FC3AAA9DED77CB

P[5Sd5DGFD
A988DED8CD7

P[5dP5>ED8
A889DECECC8

P[5h a59FFA
A889B78CE7F3A889DECAGG7

[WW

[WWOc CD1	8G78D 9979A	[WWQZf P[O] Oc CC1	9878E 8D79B
[WWQZf PgO] Oc CC1	9; 79; 8D79B	[WWQ x áu x Oc CE1	9978E 8D79C

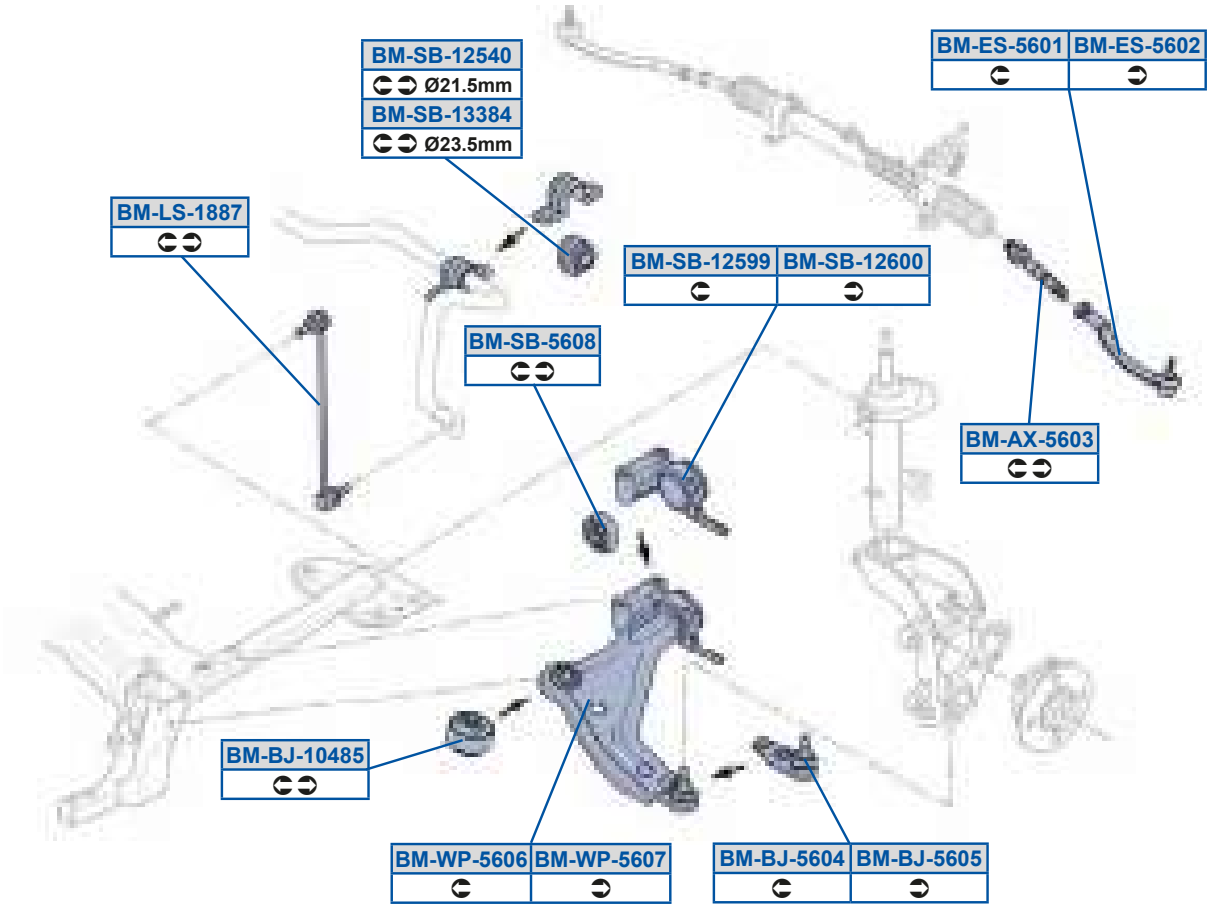

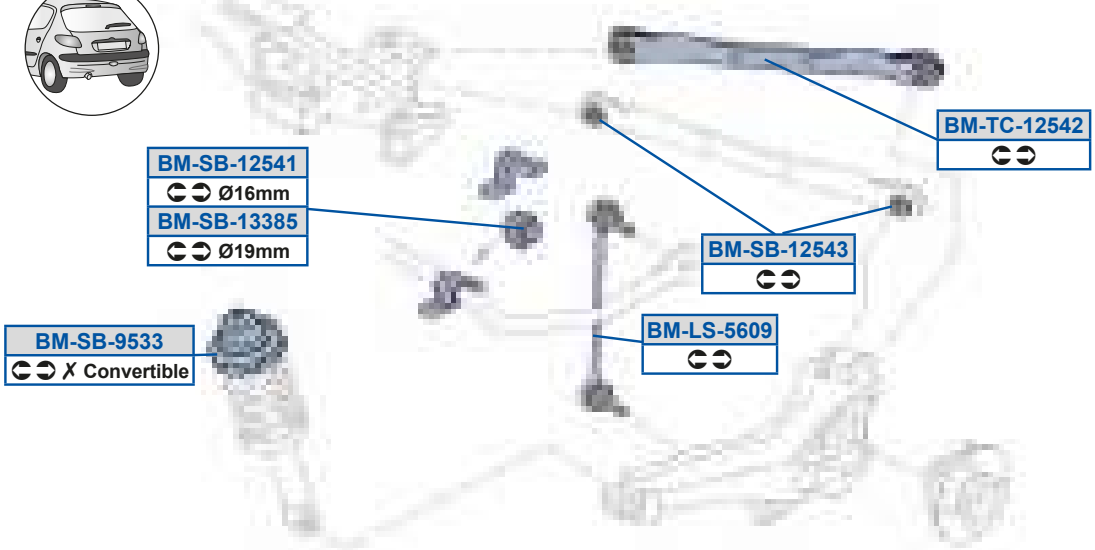

P[5Oi 5CD8A
A889B7BFD9F /40

P[5dP59>CB8
A8ACDEE9FBA

P[5dP5GCAA
AAC9DECB89A

P[5PX598BFC
A889DEE9A7C

P[5dP59>CB9
AACCDECBF9A

P[5eQ59>CB>
AAA98BG77FC3AAA9DED77CB

P[5PX5CD8B
A889B7BFD9G3A889DEE9A7A

P[5dP59>CBA
AAA98BG77FC /40

P[5h a5CD8D
A889B7BFD9E3A889DEE9A78

P[5PX5CD8C
A889B7BFDA73A889DEE9A7B

P[5dP59>CGG
A889DEE99AD

P[5h a5CD8E
A889B7BFD9F3A889DEE9A79

P[5Sd5CD89
A987DEEFBAE

P[5dP59>D88
A889DEE99AC

P[5Sd5CD8>
A987DEEFBAF

P[5dP59AAFB
A8ACDEE9FBB

P[5Zd59FFE
A8ACDECGCAE3A8ACDEEFFA8

P[5dP59AAFC
AACCDEE9EFF

P[5Zd5CD8G
AAC7DEE9EFG3AAC7DEF88AA

P[5dP5CD8F
A889DEDECA7

[WW

[WWOTCC1	8G79A	[WWOTCD1	8B79A
[WWQZf P[O] OTCB1	9979B	[WWQ x éu x OTCE1	9979B

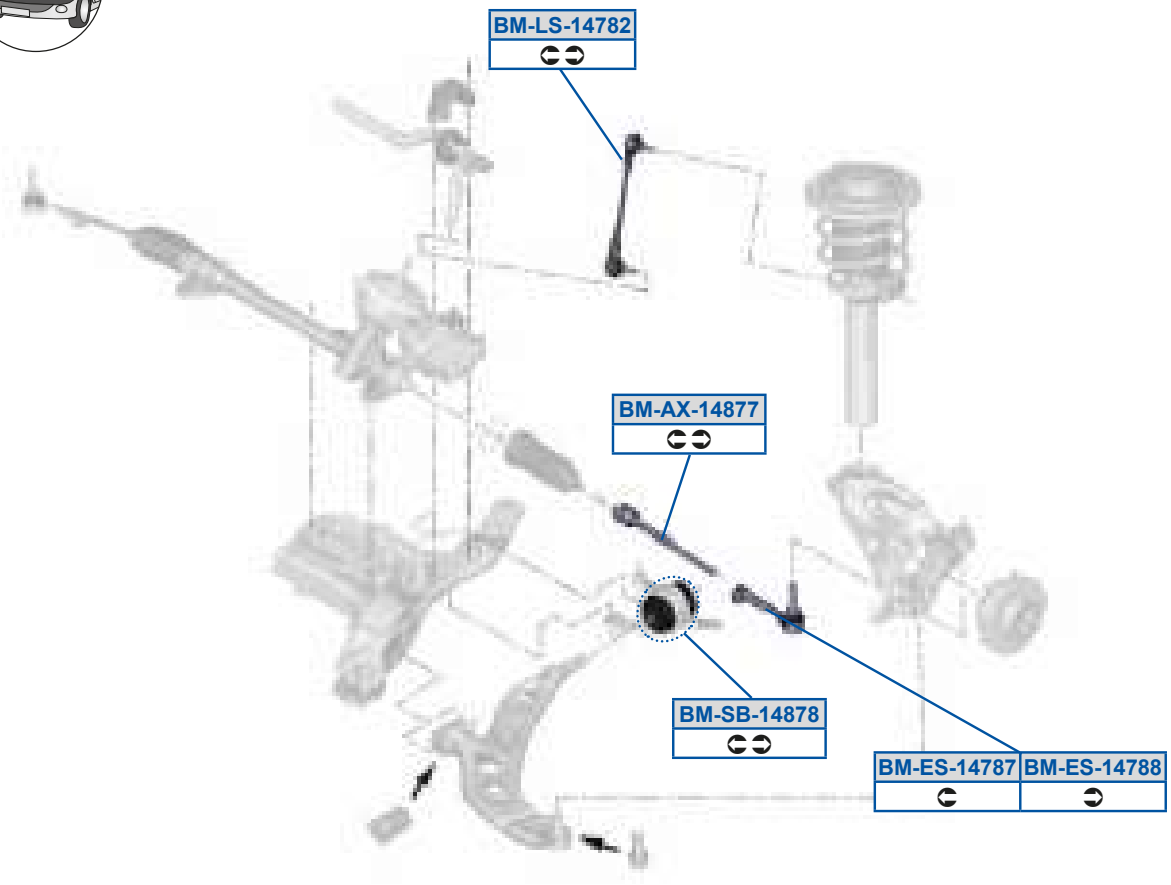

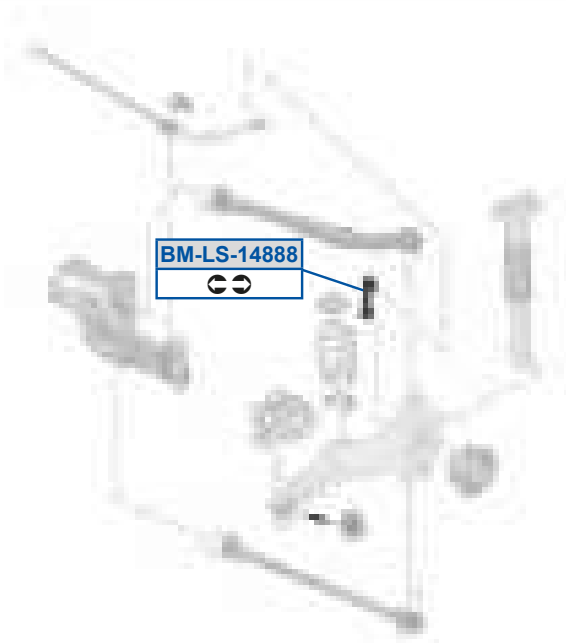

P[5Oi 59BFEE

A9 87 D FDE B7B /40

P[5Sd59BEFE

P[5Sd59BEFF

A987DFCBEAE

P[5Zd59BEF>

A8A7DFD9FDA

P[5Zd59BFFF

AAC7DFD9FDC

P[5dP59BFEF

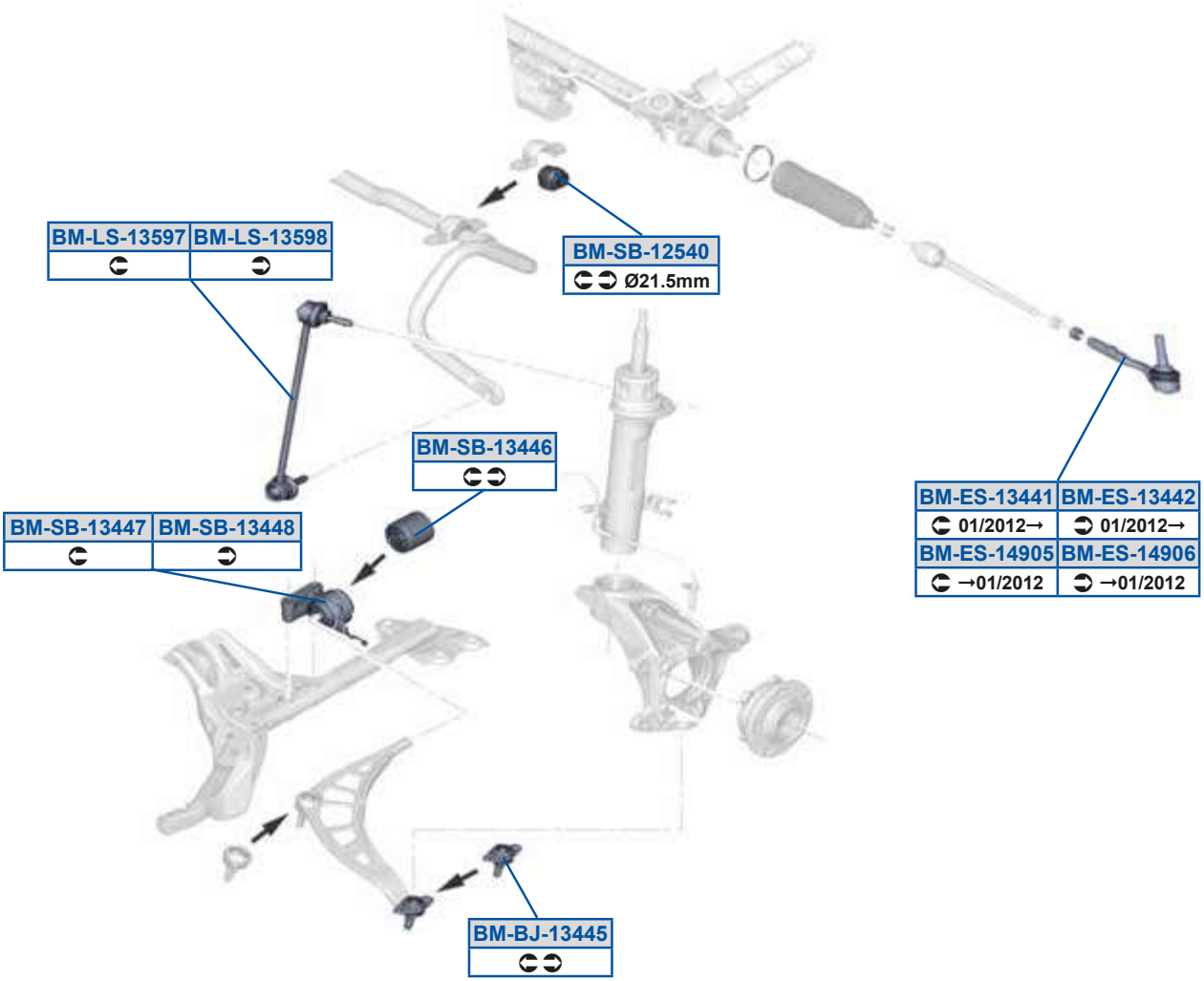
BM-LS-13597
BM-LS-13598
BM-SB-12540
Ø21.5mm
BM-SB-13446
BM-SB-13447
BM-SB-13448
BM-ES-13441
01/2012→
BM-ES-13442
01/2012→
BM-ES-14905
→01/2012
BM-ES-14906
→01/2012
BM-BJ-13445

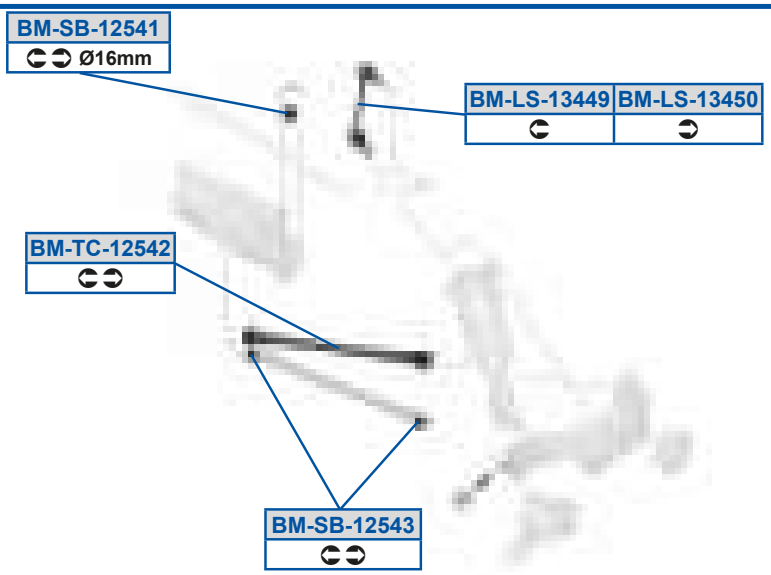
BM-SB-12541
Ø16mm
BM-LS-13449
BM-LS-13450
BM-TC-12542
BM-SB-12543

P[5PX59ABBC
A887GF7ADD9

P[5Zd59ACGF
A8ACGF7DAC9

P[5Sd59ABB9
A987GF7FFAG

P[5dP59>CB8
A8ACDEE9FBA

P[5Sd59ABB>
A987GF7FFB7

P[5dP59>CB9
AACCDECBF9A

P[5Sd59BG8C
A987GF7CCC8

P[5dP59>CBA
AAA98BG77FC /40

P[5Sd59BG8D
A987GF7CCC9

P[5dP59ABBD
A889GF7ADD93A889GF7AEFF

P[5Zd59ABBG
AAC7GF7AC8C

P[5dP59ABBE
A889GF7ABGE

P[5Zd59ABC8
AAC7GF7AC8D

P[5dP59ABBF
A889GF7ABGF

P[5Zd59ACGE
A8ACGF7DAC8

P[5eQ59>CB>
AAA98BG77FC3AAA9DED77CB

[Wdf PWVW

Odi OUOrhr1	89798	Odi gt OUOrhr1	8D798

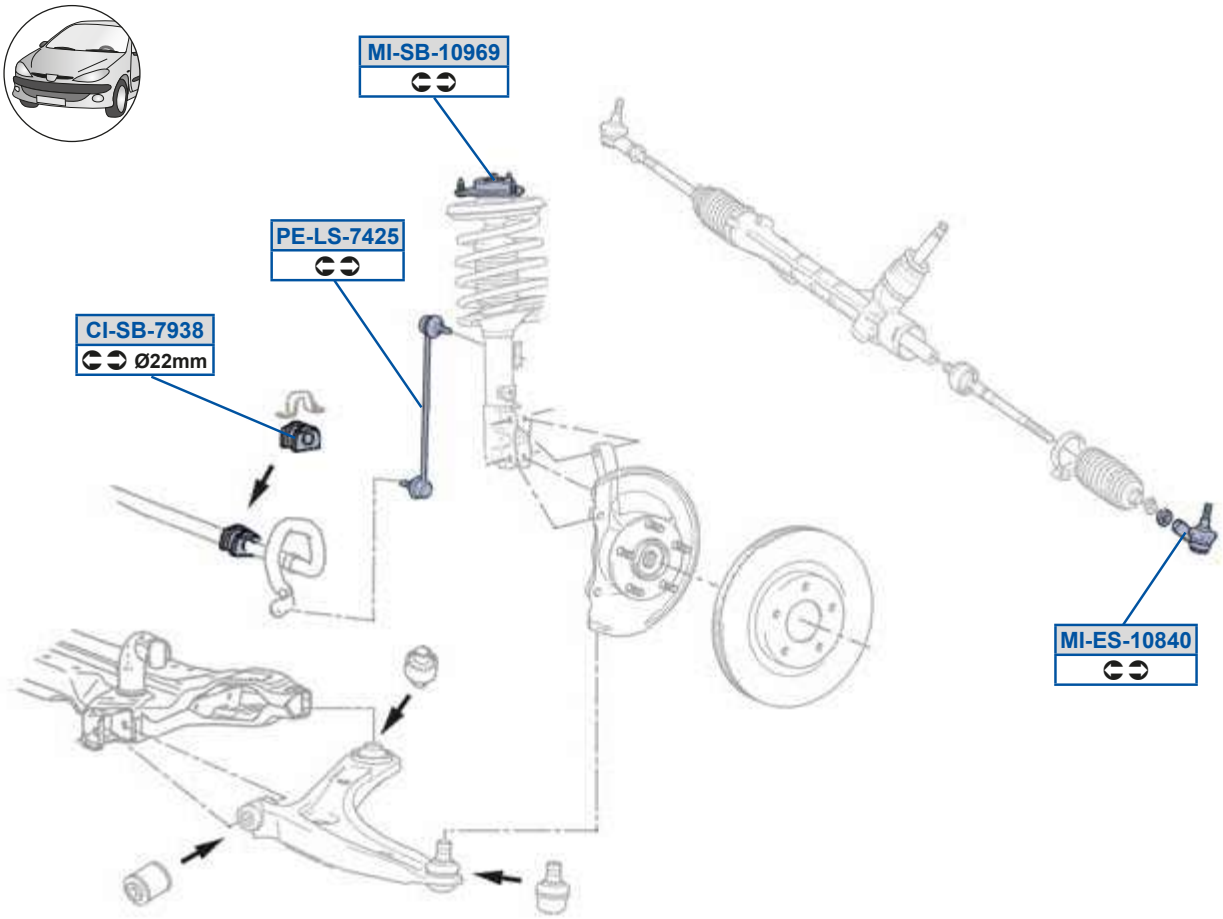

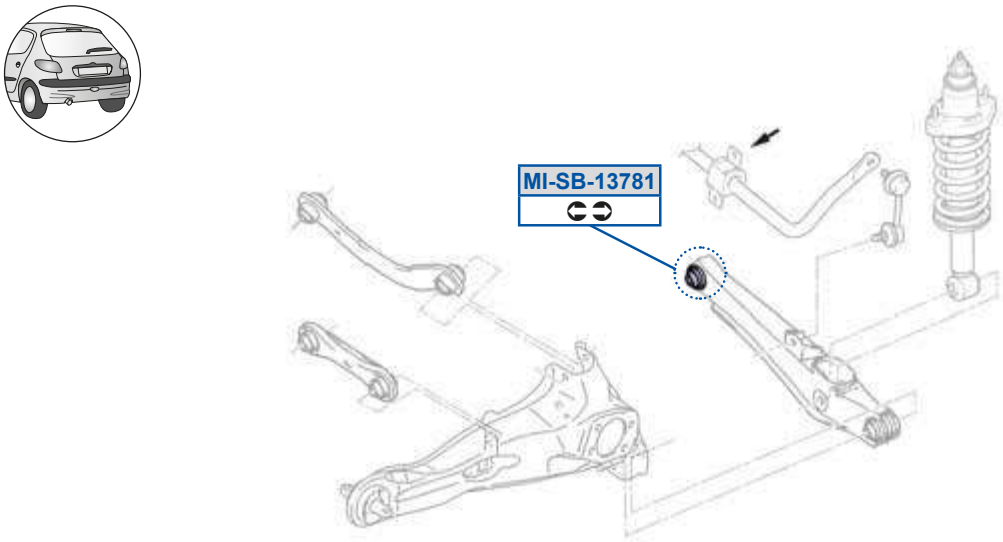

MOOG

QV5dP5EGAF

B7CD07EG

[V5Sd598FB8

BB9907C9

[V5dP598GDG

a d878AE9

[V5dP59AEF9

a d877887

aS5Zd5EB>C

a d878ADF

[Wdf PWVW

QOcWd[0 0ROr 1	8E7GC 8D78D	QOcWd[0 dt 0ROr 1	8G7GD 8D78D

Qr z r

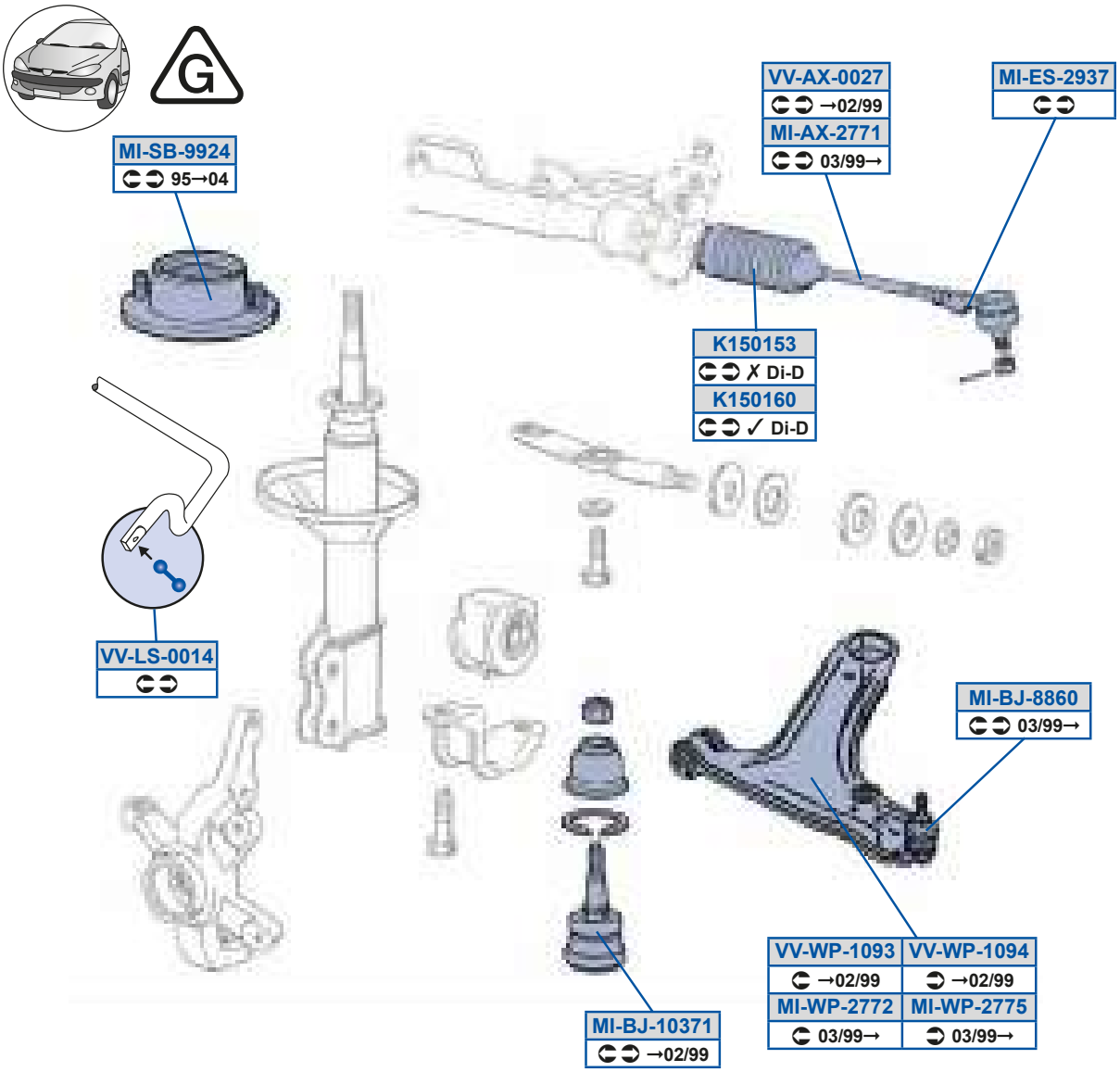

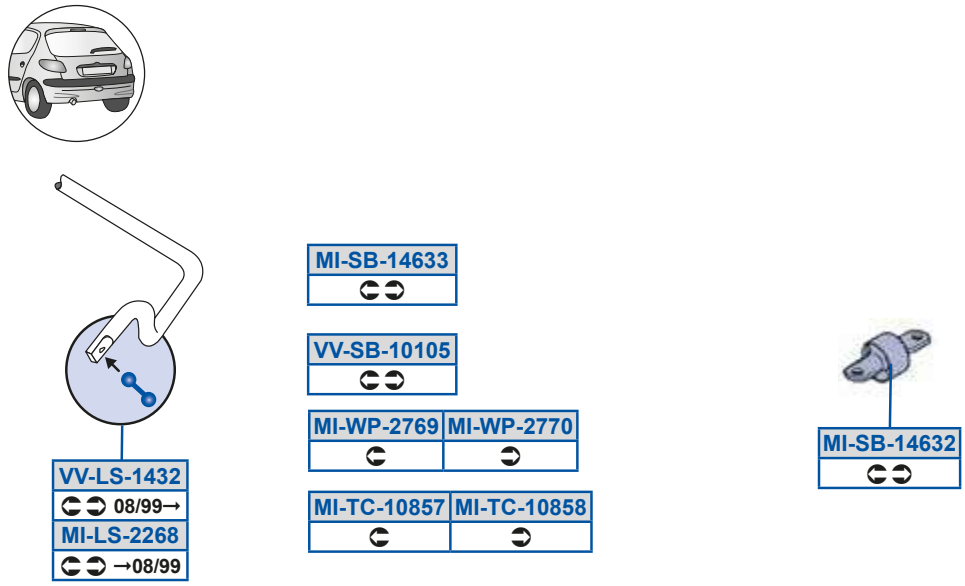

MOOG

Y9C89CA
AABCEGD

[V5dP59BDAA
a n8A7BEG /403a n8A7BF7 /40

gg5Oi 588>E
a n9BBG78

Y9C89D8
a n9BBG79

[V5dP5GG>B
a n8A8B97

gg5Zd5889B
a n8A8DF73a n9E988D

[V5OI 5>EE9
a nB7A79E

[V5eQ598FCE
a PF7G9993a PG87FB9

gg5Zd59BA>
a FFBACG3a n9E988F

[V5PX598AE9
0 A88DGG3a P9B8FFA

[V5eQ598FCF
a PF7G99A3a nBG8ABF

gg5dP59898C
a n8797DA

[V5PX5FFD8
a nG88CDG /403a nG88CE7 /40

[V5h a5>EDG
a PF7G9973a nBG8ABC

gg5h a598GA
a d8AAD8E3a n8EGBEG

[V5Sd5>GAE
BB99O79F3a PC9E8DG

[V5h a5>EE8
a PF7G9983a nBG8ABD

gg5h a598GB
a d8AAD8F3a n8EGBF7

[V5Zd5>>DF
a PF7GACB3a n9E988E

[V5h a5>EE>
a n9GE9B83a nG88CE7

[V5dP59BDA>
a n8A7BEG /403a n8A7BF7 /40

[V5h a5>EEC
a n9GE9B93a nG88CDG

[Wdf PWVW

Q_Ze g 0QXr 4Qar 1	8G7GC 8G78A		

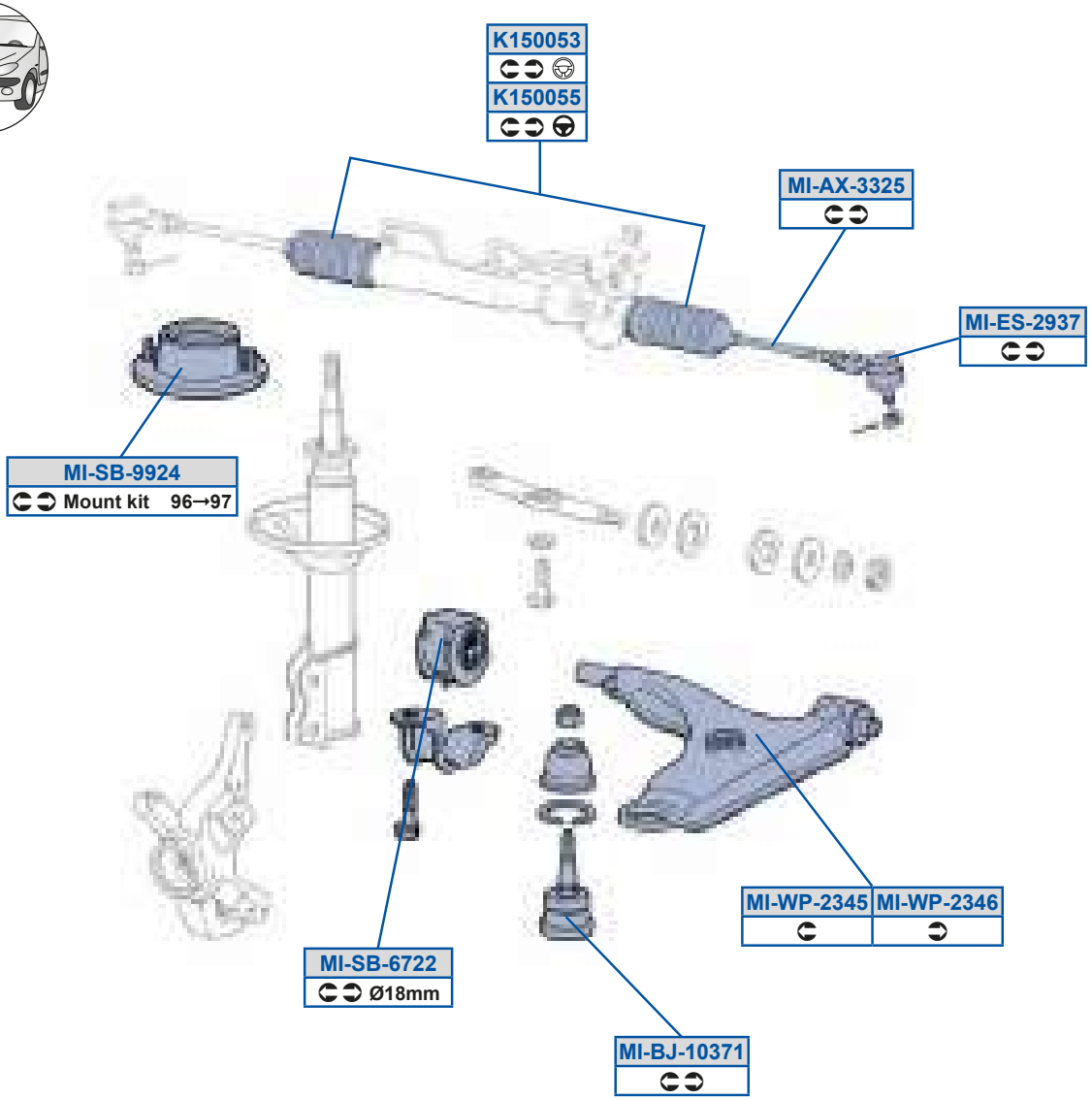

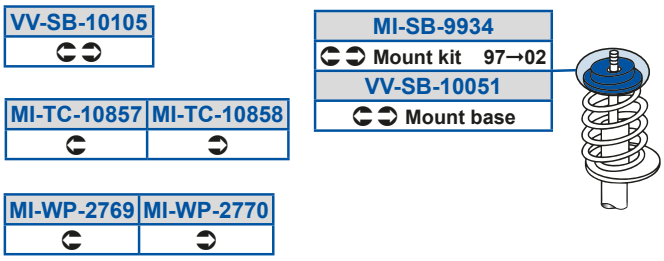

Y9C88CA
BCCACGE9783a PABEADB

Y9C88CC
a PAC7CF83a PC78E88

[V5OI 5AA>C
a PG87GAB3a PG87GD8

[V5PX598AE9
O A88DGG3a P9B8FFA

[V5Sd5>GAE
BB99O79F3a PC9E8DG

[V5dP5DE>>
a n8E8BB8

[V5dP5GG>B
a n8A8B97

[V5dP5GGAB
a P9B9ACF3a PAAFD8F

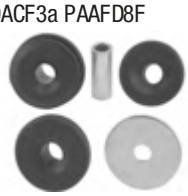

[V5eQ598FCE
a PF7G9993a PG87FB9

[V5eQ598FCF
a PF7G99A3a nBG8ABF

[V5h a5>ABC
a n9B8AB8

[V5h a5>ABD
a n9B8AB9

[V5h a5>EDG
a PF7G9973a nBG8ABC

[V5h a5>EE8
a PF7G9983a nBG8ABD

gg5dP5988C9

gg5dP59898C
a n8797DA

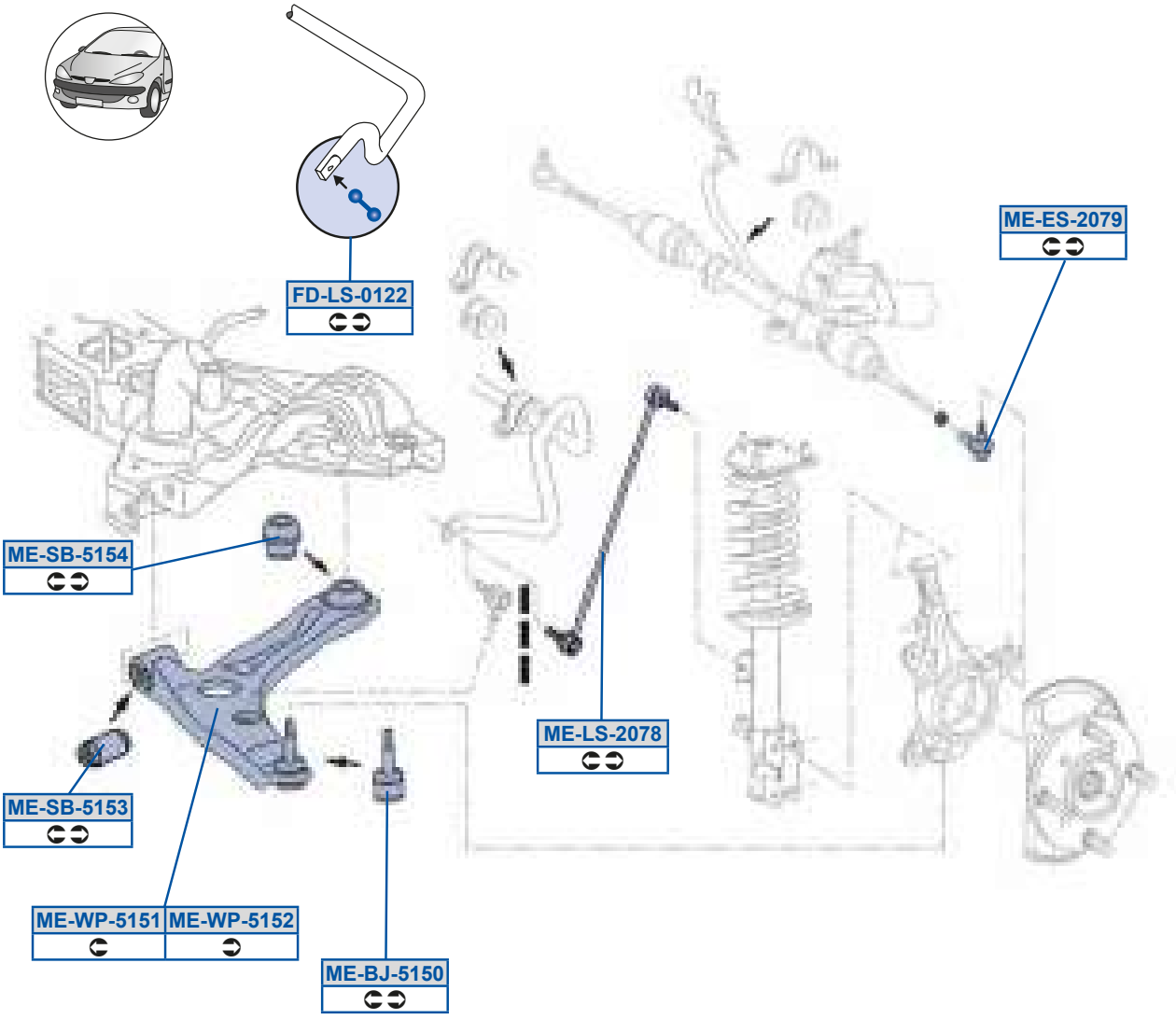
FD-LS-0122
ME-ES-2079
ME-SB-5154
ME-LS-2078
ME-SB-5153
ME-WP-5151
ME-WP-5152
ME-BJ-5150

MOOG

TR5Zd589>>
B7CD07C9

[S5PX5C9C8
B78A08ACo83B78A08ADo8

[S5Sd5>8EG
a d8FD89B3a nGEED7D

[S5Zd5>8EF
BCBA9777873a nGD8BEE

[S5dP5C9CA
a d8FD98E /403a d8FD98F /40

[S5dP5C9CB
a d8FD98E /403a d8FD98F /40

[S5h a5C9C9
B78A08AC3BCBA78G7E

[S5h a5C9C>
B78A08AD3B78A08C7

[Wdf PWVW

UOZO] e g 0SCr 04SEr 04SFr 01	997G;	987GD	UOZO] e g dt 0SCr 04SEr 04SFr 01	997G;	8F7GD
UOZO] e gWS t x0SOr 1	8G7GD	9878A	UOZO] e gWdt 0SOr 1	8G7GD	9878B

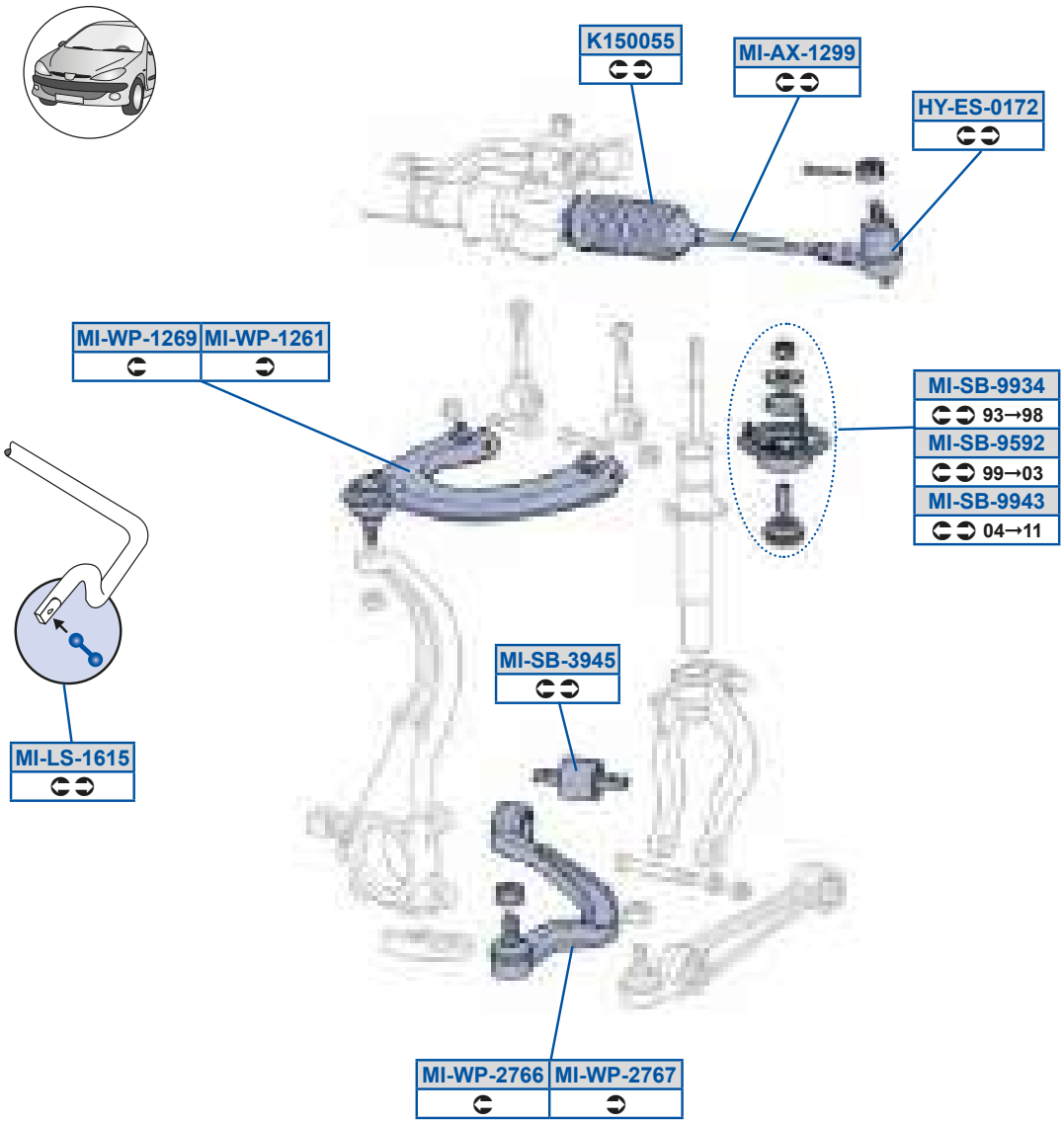

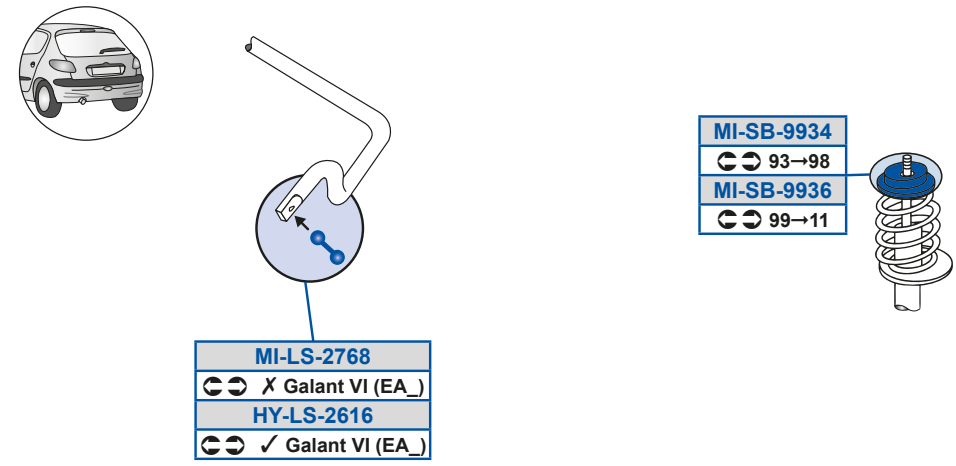

MOOG

Vj 5Sd589E>

CDFE97AE7873a P8G9BGG

Vj 5Zd5>D9D

B7CD078G3a PDA8FG7

Y9C88CC

a PAC7CF83a PC78E88

[V5Oi 59>GG

a PB7AFE93a PGBGABA

[V5Zd59D9C

B7CD079D3a PFG9GF8

[V5dP5AGBC

a PG89C89

[V5dP5GCG>

a PG89C89

[V5dP5GGAD

a PFE8EBF3a PG87FFE

[V5dP5GGBA

[V5h a59>D9

a PG89C7D3a n8D9F7B

[V5h a59>DG

a PG89C7C3a n8D9F7A

[V5h a5>EDD

a PG89C883a n8D9CF8

[V5h a5>EDE

a PG89C893a n8D9CF9

UOZZ_aSc OXY5891	8G7GF 9; 78A		

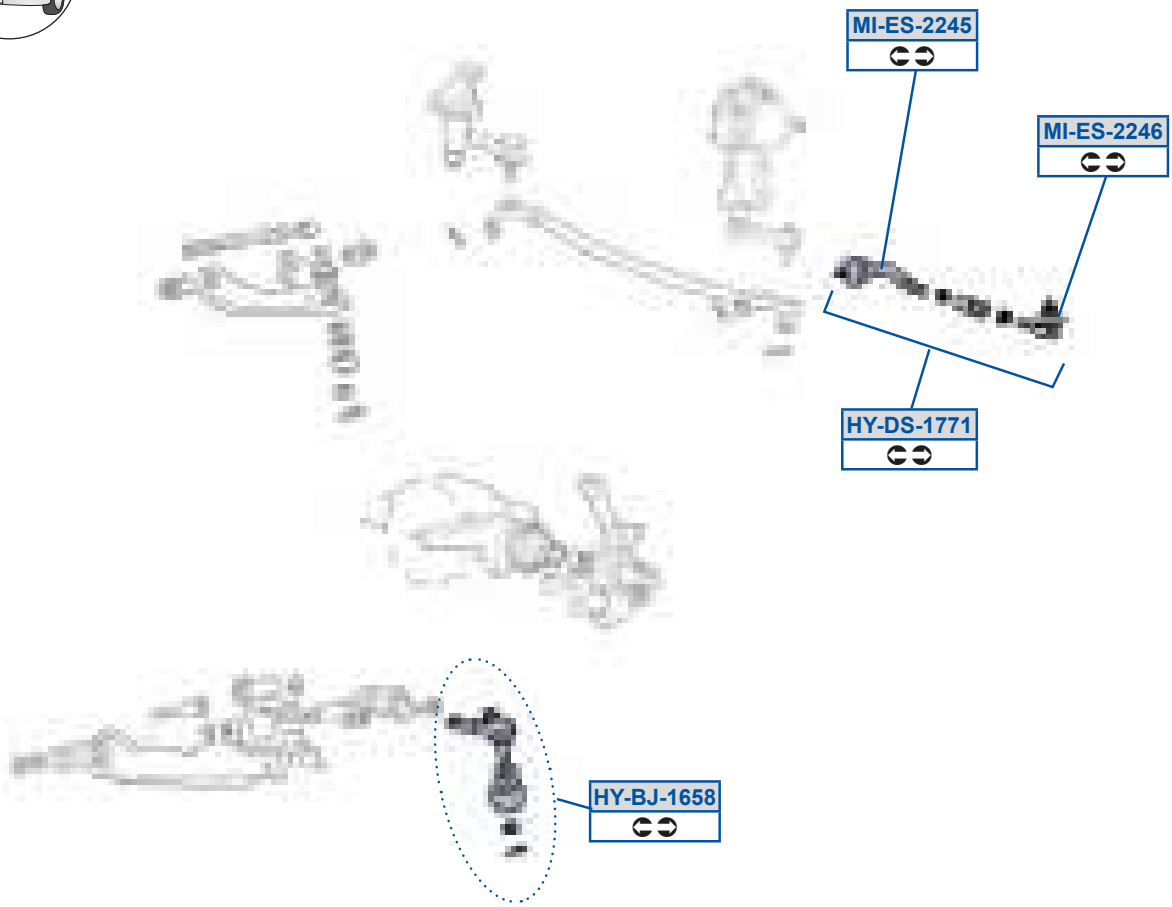

[Wdf PWVW

MOOG

Vj 5PX59DCF

VP9898773VP989977

Vj 5Rd59EE9

a P9BAB9C0

[V5Sd5>>BC

a P9B897D3a PA8CEED

[V5Sd5>>BD

a P9B88E83a PA8CEEC

[Wdf PWVW

Z ; 88 0YAr e4Y; r e4Y9r e4Y8r e1	897FD	987GD	Z ; 88 a t 67QÉt 60YAr e4Y8r e4Y9r e4Y; r e1	897FD	987GD

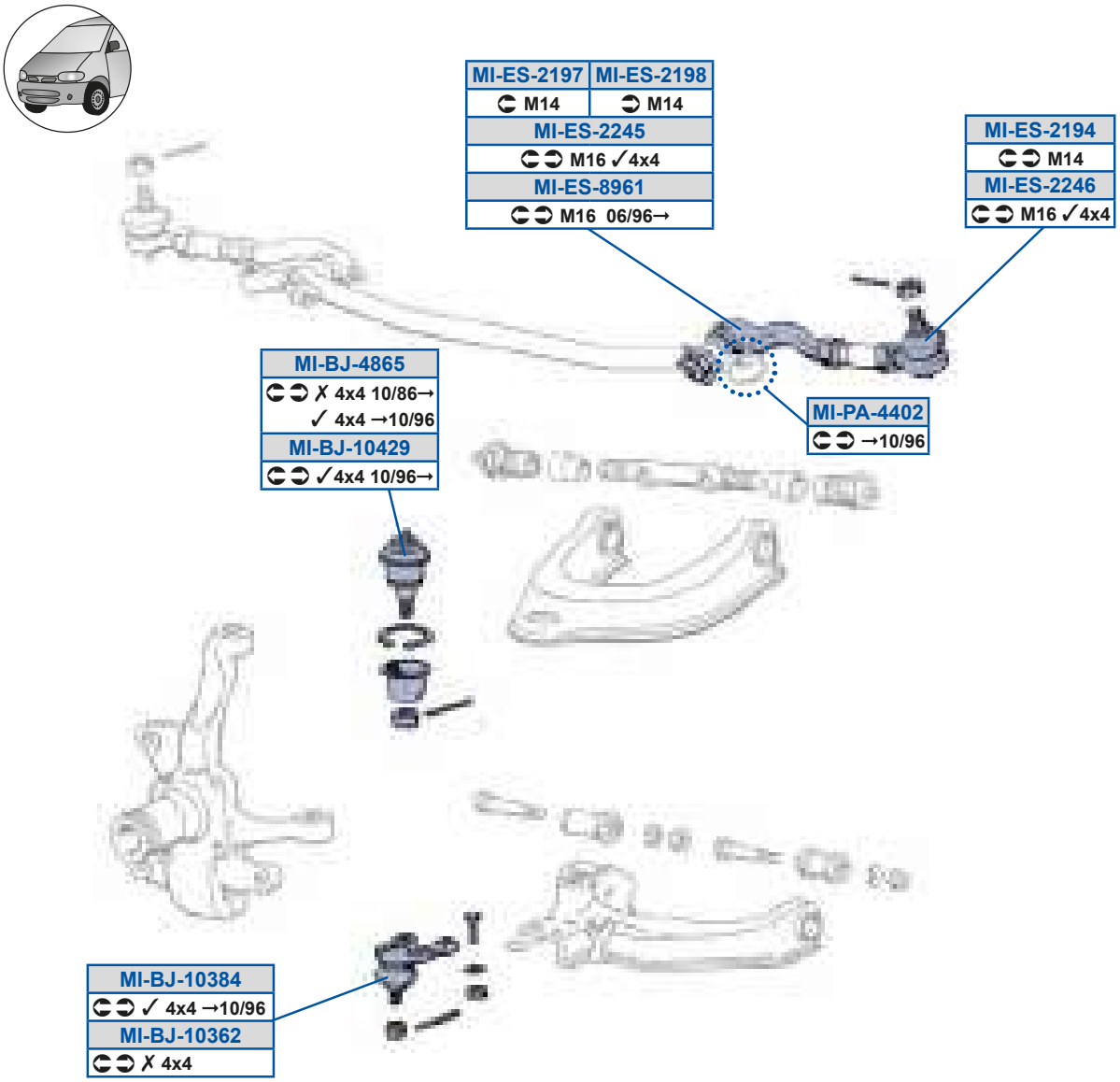

Z>88 0897 9GFD 5L 9879GGD1

[Wdf PWVW

MOOG

[V5PX598AFB
a P8EDA7F

[V5PX5BFDC
a PC9EC8878

[V5Sd5>9GB
CDF87887773a O8CGD8B

[V5Sd5>9GE
a P7ED77A3a P7EDDDA

[V5Sd5>9GF
a P7ED77B3a P7EDDDB

[V5a O5BB8>
a P9B8B9A

[V5df PWVW Z>88 03979GFD5L 9879GGD1

Z ; 88 0YEr e4YDr e1	897GD 9; 78E	Z ; 88 a t y 7QÉt é 0YDr e4YEr e1	897GD 9; 78D

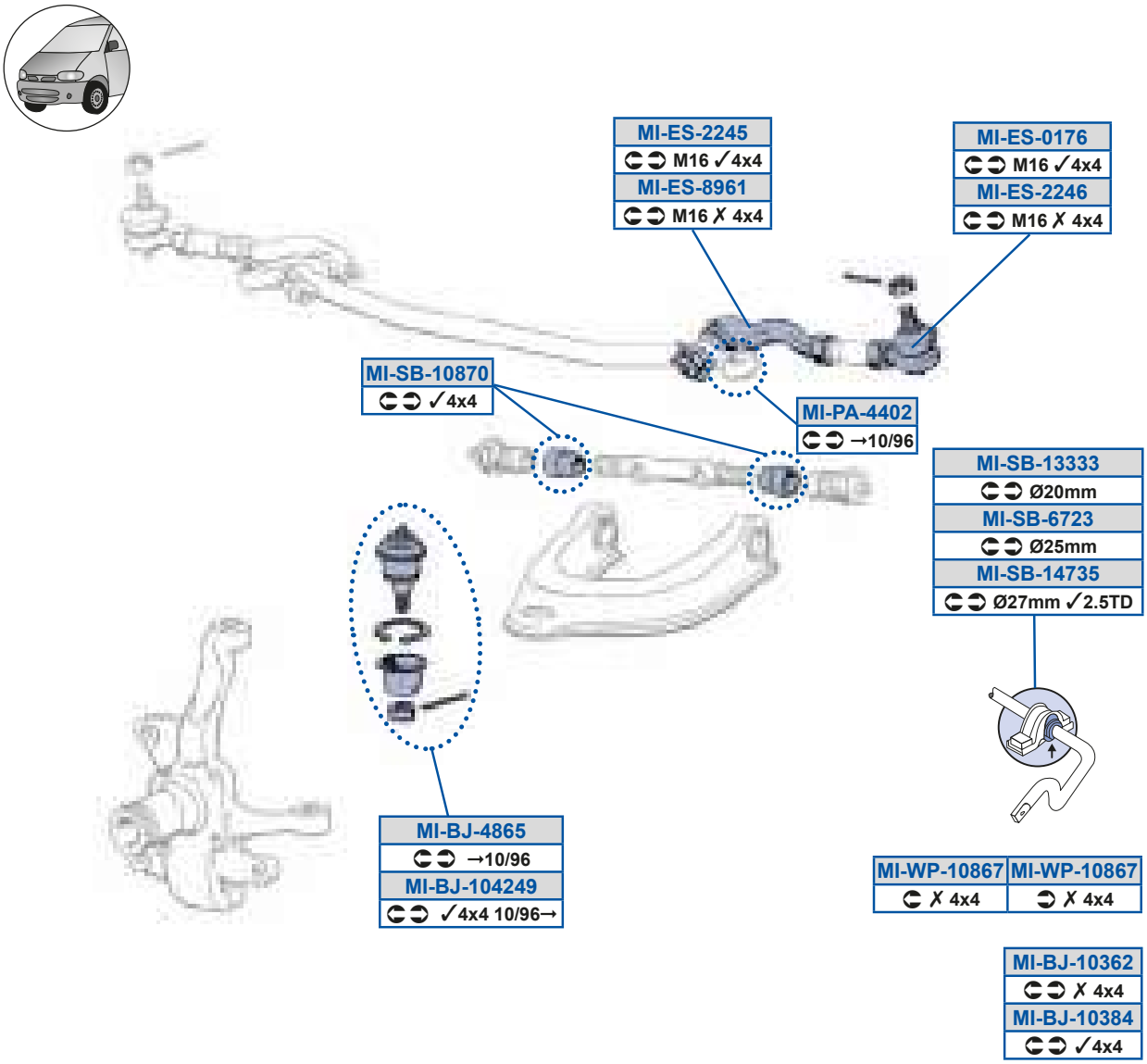

[V5PX598AD>
a P8ECF893a P8ED9EA

[V5a O5BB8>
a P9B8B9A

[V5PX598AFB
a P8EDA7F

[V5dP598FE8
a nGG99CD

[V5PX598B>BG
a PFD7F9G3a PFD7FA7

[V5dP59AAAA
a n8C7EDE

[V5PX5BFDC
a PC9EC8878

[V5dP59BEAC
a n8C8A9E

[V5Sd589ED
a PFA87BA3a n9GD9EC

[V5h a598FDE
a n9B879C3a n9GD79E

[V5Sd5>>BC
a P9B897D3a PA8CEED

[V5h a598FDF
a n9B879D3a n9GD79F

[V5Sd5>>BD
a P9B88E83a PA8CEEC

[V5Sd5FGD9
a n9B87A8

[V5df PWVW Z>88 03979GGD5L 9>7>88E1

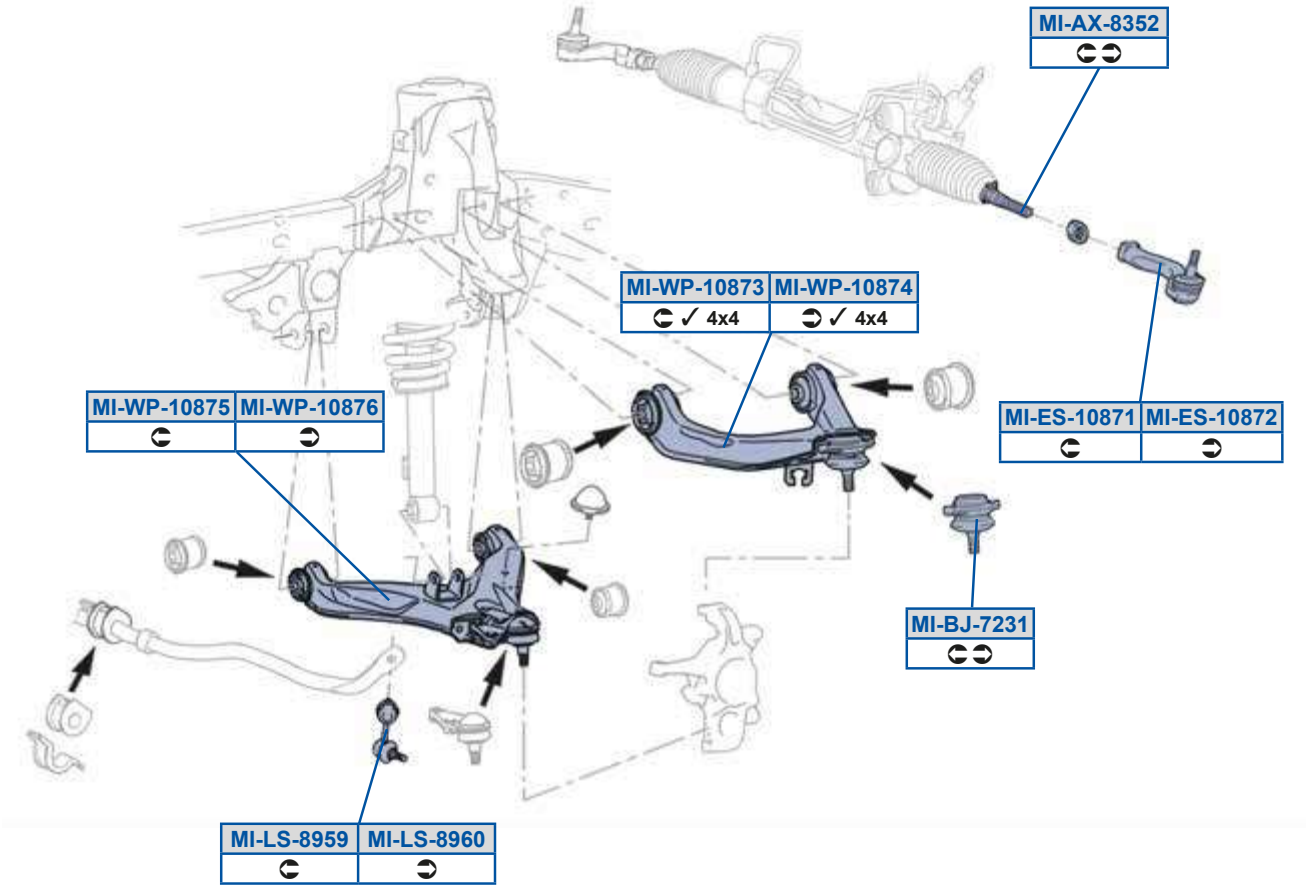
MI-AX-8352
MI-WP-10873
MI-WP-10874
✓ 4x4
✓ 4x4
MI-WP-10875
MI-WP-10876
MI-ES-10871
MI-ES-10872
MI-BJ-7231
MI-LS-8959
MI-LS-8960

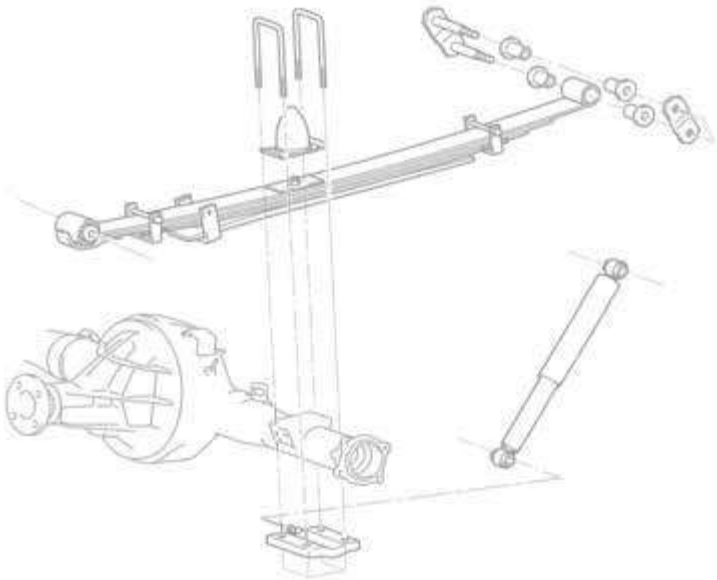

MOOG

[V5OI 5FAC>
BB8708EA

[V5PX5E>A9
B787078C3B787079G

[V5Sd598FE9
BB99077G3a nC7F8AC

[V5Sd598FE>
BB9907873BB9907GE

[V5Zd5FGCG
a nGG9A7G

[V5Zd5FGD8
a nGG9A87

[V5h a598FEA
B787078A3B787087A

[V5h a598FEB
B787078B3B787087B

[V5h a598FEC
B78A07FE3B78A0A9G

[V5h a598FED
B78A07FF3B78A0AA7

[Wdf PWVW

Z A88 P 0a8r h 4a9r h 1	997FD	8G79A	Z A88 P 0a8r h 4a9r h 4a; r h 1	997FD	8C78B
Z A88 WWP 0a8r h 4a9r h 4a; r h 1	8D7GB	8C78A	Z A88 a t y 7QÉt é 0a9r e 1	8B7GB	8B788

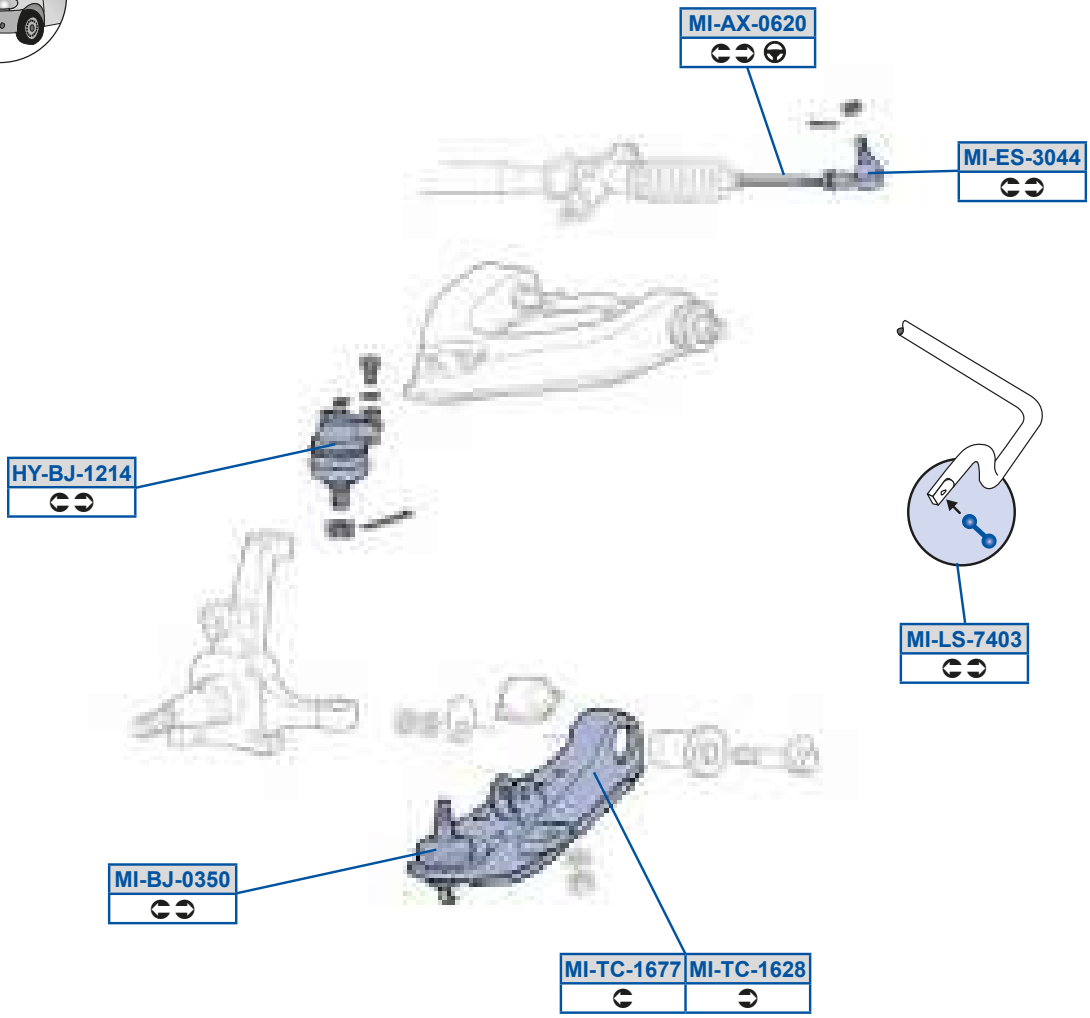

MOOG

Vj 5PX59>9B
a PC9EABG3a PC9EAC7

[V5Oi 58D>8
a P9DD8C93a PA8C8D7

[V5PX58AC8
a PC9EAFA3a PC9EAFA78

[V5Sd5A8BB
a PABECGG3a PC9EDC7

[V5Zd5EB8A
a PC9EAFC

[V5eQ59D>F
CGF78F3a PC9EAFA

[V5eQ59DEE
a PC9EAFB3a PCGF78E

Z A88 P 0a8r h 4a9r h 4a; r h 1	997FD 8C78B	Z A88 WMP 0a8r g4a9r g4ar ; g1	997FD 8C78A

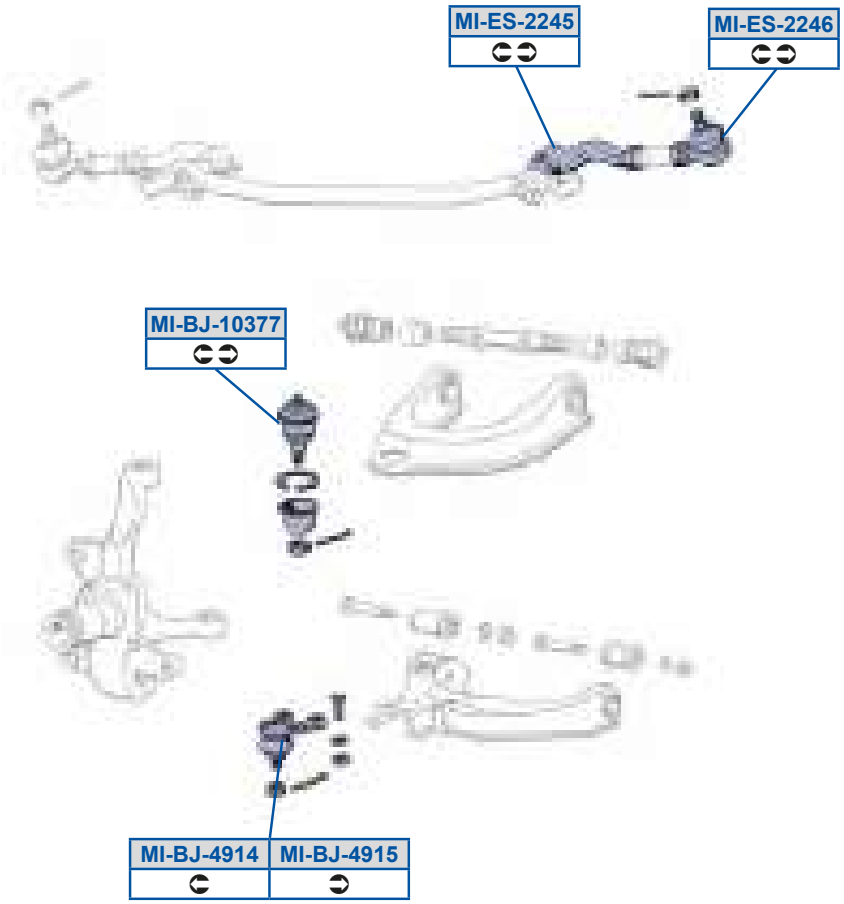

MOOG

[V5PX598AEE
a P8EDA7G3a P9B88CC

[V5PX5BG9B
a PC9EAC8

[V5PX5BG9C
a PC9EAC9

[V5Sd5>>BC
a P9B897D3a PA8CEED

[V5Sd5>>BD
a P9B88E83a PA8CEEC

[Wdf PWVW

Z0] QSc g 0QPr 04QRr 04QSr 01	8D7G; 9; 7GD	Z0] QSc g Q x 0QQ1	8G7G; 8E7GD
Z0] QSc g d t é h t' 0QPr h 4QRr h 1	8G7G; 9878A	Z0] QSc gW0QX5Qar 1	8G7GC 8F78A

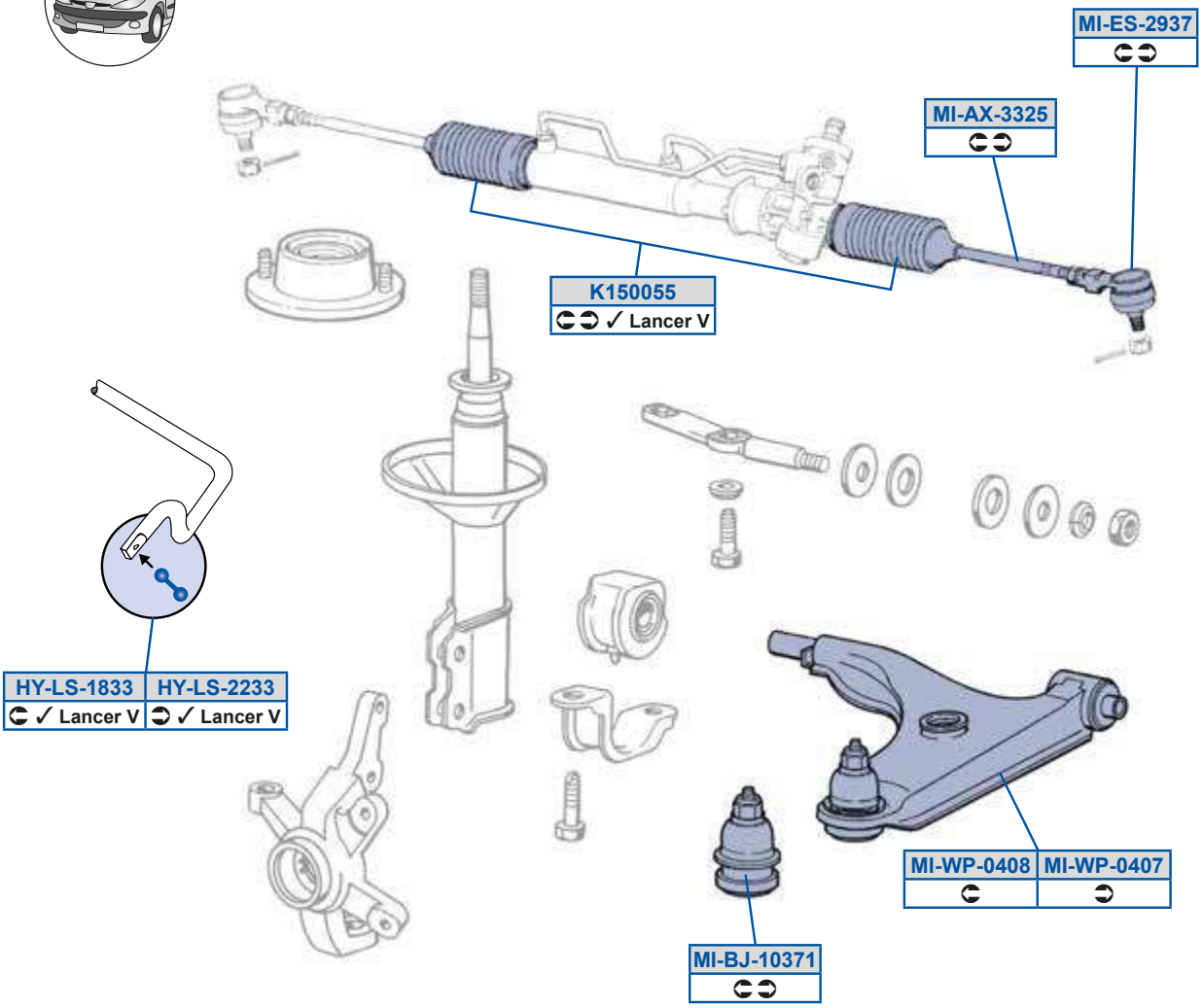

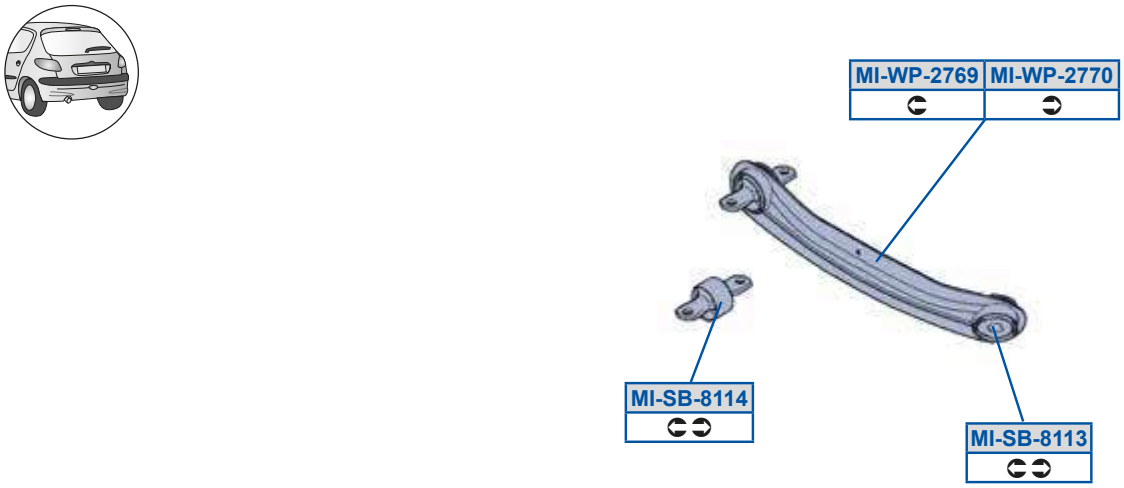

MOOG

[V5Oi 5AA>C
a PG87GAB3a PG87GD8

[V5PX598AE9
O A88DGG3a P9B8FFA

[V5Sd5>GAE
BB99079F3a PC9E8DG

[V5dP5F99A
a PF7G997 /403a PF7G998 /40

[V5dP5F99B
a PF7G997 /403a PF7G998 /40

[V5h a58B8E
a PG7E88D3a PG7E8DB

[V5h a58B8F
a PG7E88C3a PG7E8DA

[V5h a5>EDG
a PF7G9973a nBG8ABC

[V5h a5>EE8
a PF7G9983a nBG8ABD

[Wdf PWVW

Z0] QSc gWQdr 04Qer 01	8D788	Z0] QSc gWS t x QdrH 4QerH 1	8G78A 9878F
Z0] QSc dt QdrH 01	8A788		

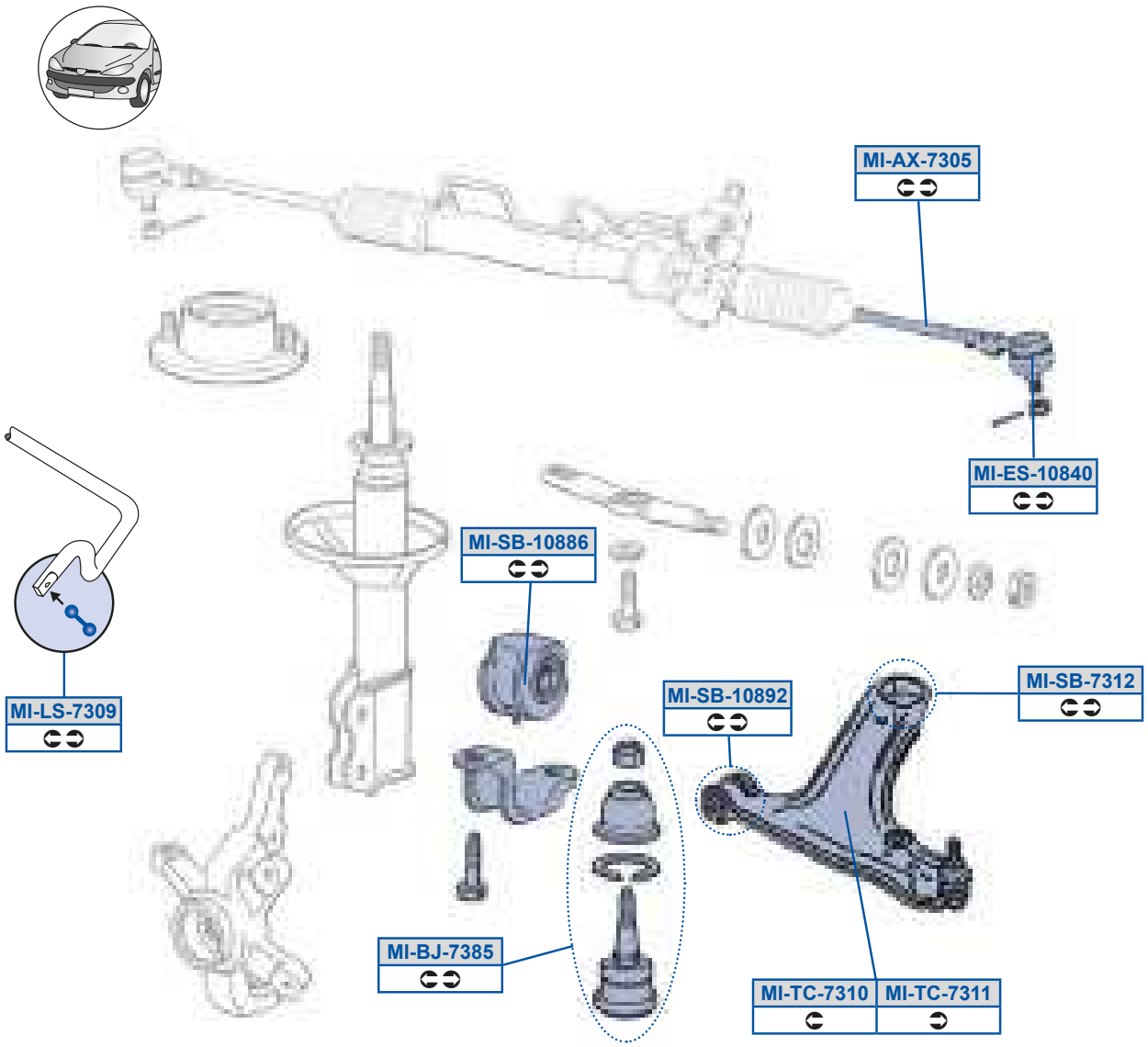

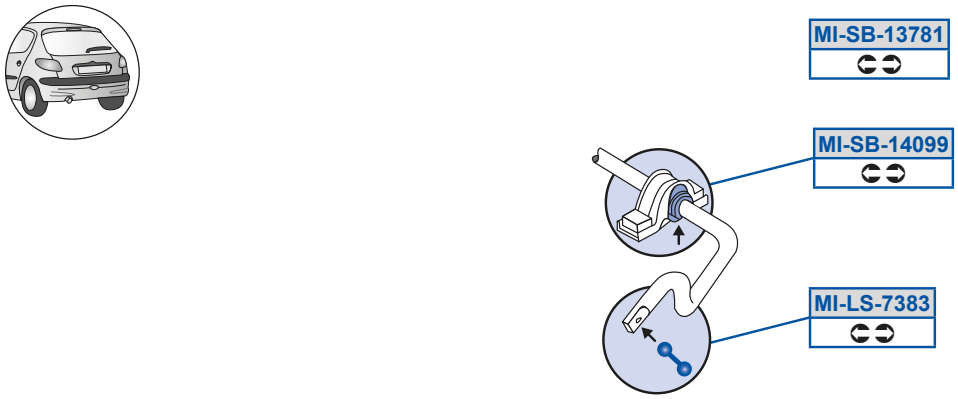

MOOG

[V5OI 5EA8C
BB9907CD3BB9907EF

[V5PX5EAFC
a nB7AB8G3a nB7AB97

[V5Sd598FB8
BB9907C9

[V5Zd5EA8G
B7CD08D83a n9B8ABG

[V5Zd5EAFA
B7CD07AE3a nB7AEE8

[V5dP598FFD
a d8779C7

[V5dP598FG>
a nB7AB8G /403a nB7AB97 /40

[V5dP59AEF9
a d877887

[V5dP59B8GG
a nCFGDAE

[V5dP5EA9>

[V5eQ5EA98
B78A09CC3B78A09EA

[V5eQ5EA99
B78A09CD3B78A09EB

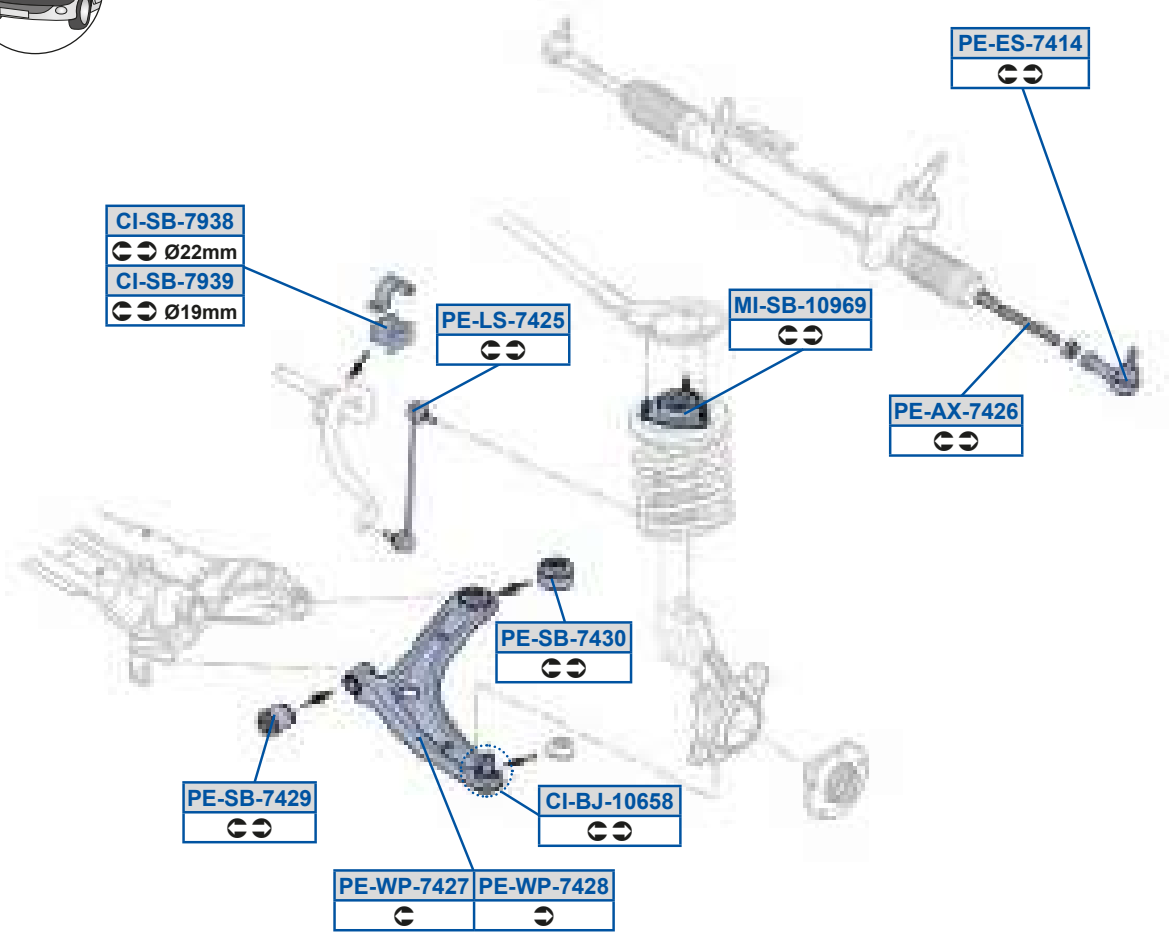
PE-ES-7414
CI-SB-7938
Ø22mm
CI-SB-7939
Ø19mm
PE-LS-7425
MI-SB-10969
PE-AX-7426
PE-SB-7430
PE-SB-7429
CI-BJ-10658
PE-WP-7427
PE-WP-7428

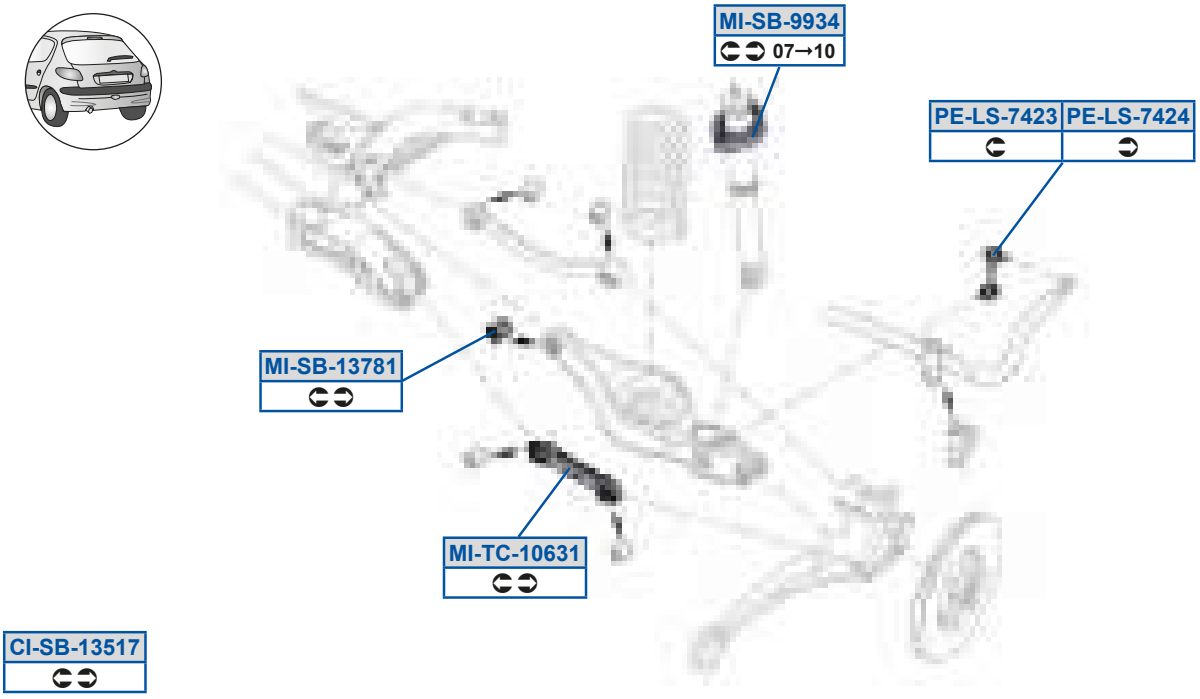
MI-SB-9934
07→10
PE-LS-7423
PE-LS-7424
MI-SB-13781
MI-TC-10631
CI-SB-13517

QV5PX598DCF
B78A077873B78A077G

aS5Oi 5EB>D
BB990789

aS5h a5EB>F
B78A07873B78A09F9

QV5dP59AC9E
B897089C

aS5Sd5EB9B
BB99078F3BB9907C9

QV5dP5EGAF
B7CD07EG

aS5Zd5EB>A
B8CD078B

QV5dP5EGAG
C8E9CF

aS5Zd5EB>B
a d8FB8GB

[V5dP598GDG
a d878AE9

aS5Zd5EB>C
a d878ADF

[V5dP59AEF9
a d877887

aS5dP5EB>G
B78A077G3B78A0787

[V5dP5GGAB
a P9B9ACF3a PAAFD8F

aS5dP5EBA8
B78A077G3B78A0787

[V5eQ598DA9
B88E077E

aS5h a5EB>E
B78A077G3B78A09F8

[Wdf PWVW

aOXSc_ QZOddWQ 0g; r h 1	8D78;	aOXSc_ WWQgAr h 4g; r h 4gBr h 1	9; 7G8 987GG
aOXSc_ WWQt t e 0g; r h 4gBr h 1	9; 7G8 8B788	aOXSc_ da_ce WOYEr 4YGr 1	8G7GD
aOXSc_ da_ce gO] WOYG81	9; 7GG 8978F		

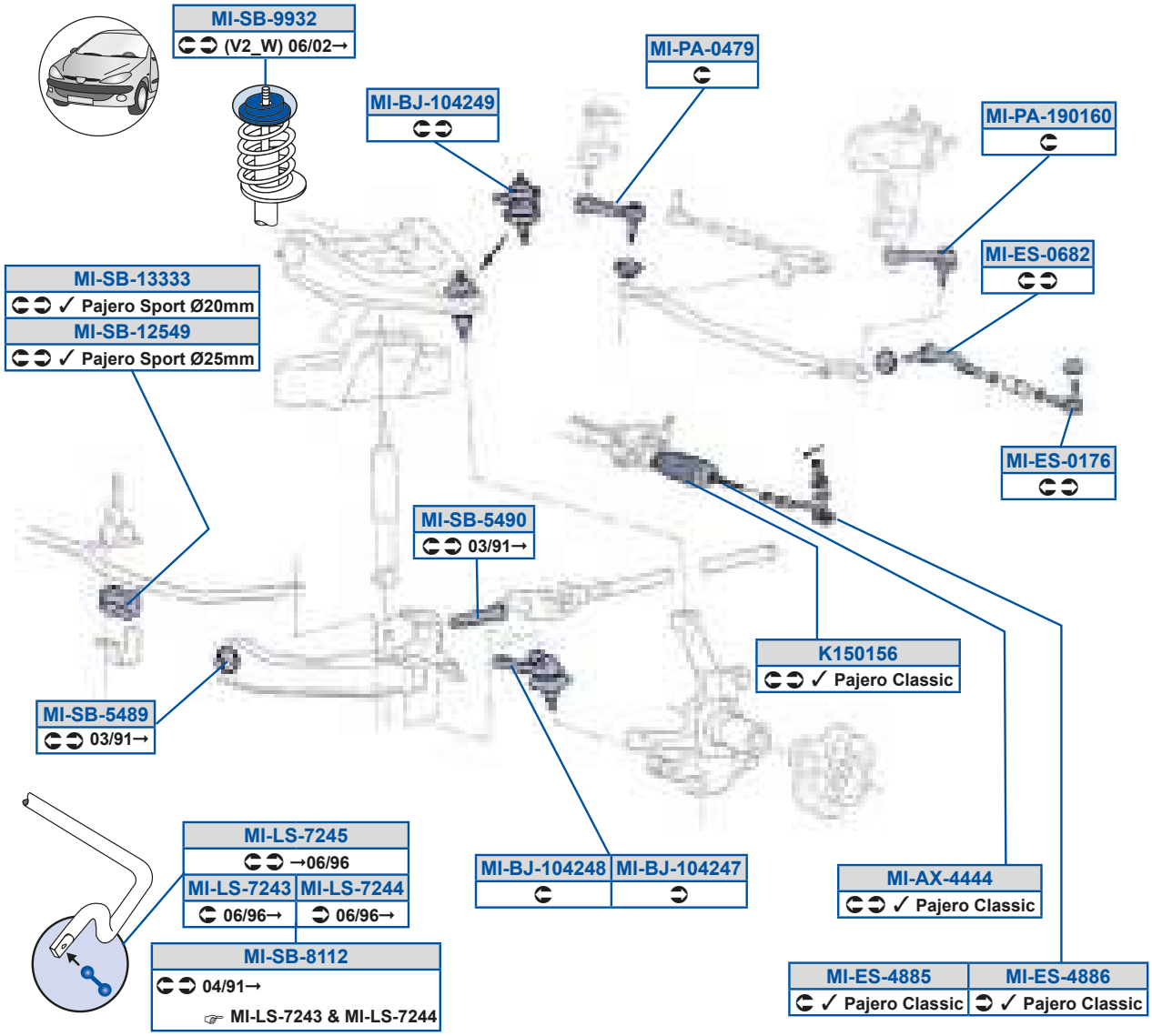

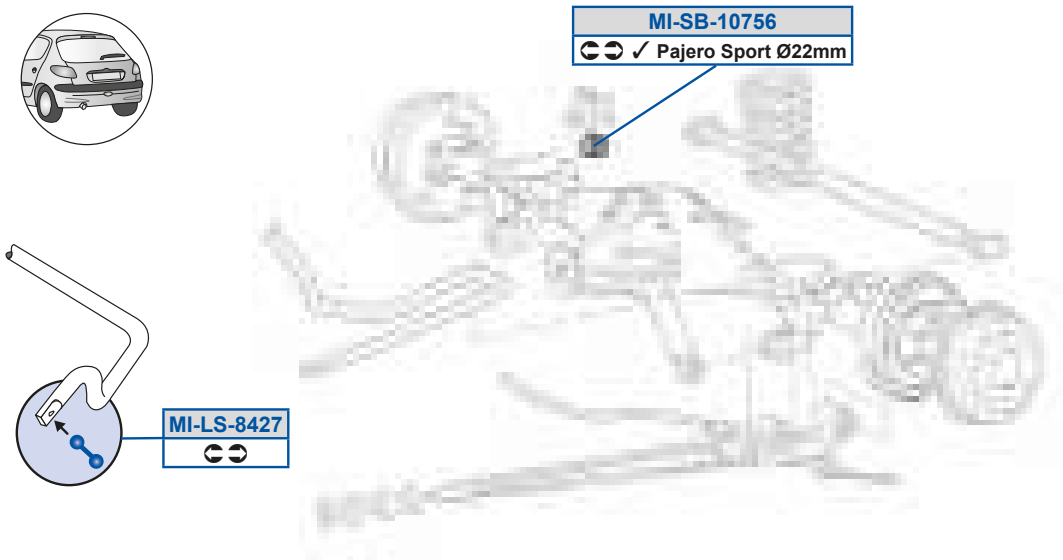

MOOG

Y9C89CD
a nC879E83a nC879E9

[V5Sd5BFFD
BB9907873a nC7F8AD

[V5dP59AAAA
a n8C7EDE

[V5Oi 5BBBB
a nC879DE

[V5Zd5E>BA
a n8A9CC83a n9DEFED

[V5dP5GGA>
a nACA9883a nAEBCBD

[V5PX598B>BE
a PFA87AF3a n9GD9E7

[V5Zd5E>BB
a n8A9CC93a n9DEFEE

[V5PX598B>BF
a PFA87AE3a n9GD9DG

[V5Zd5FB>E
a PCGF7GF3a nABBD9B

[V5PX598B>BG
a PFD7F9G3a PFD7FA7

[V5aO58BEG
a PFA87B9

[V5Sd589ED
a PFA87BA3a n9GD9EC

[V5aO59G89D8
a PFA87B7

[V5Sd58DF>
a PFA87BB

[V5dP598ECD
a PAAFCGB3a n9DEDFB

[V5Sd5BFFC
BB99077G3a nC7F8AC

[V5dP59>CBG
a n8C8A9D3a n9DEDBG

[V5df PWVW ar'v WV9GG9 5L >88815d 7Qyr év xv 7Qé zt

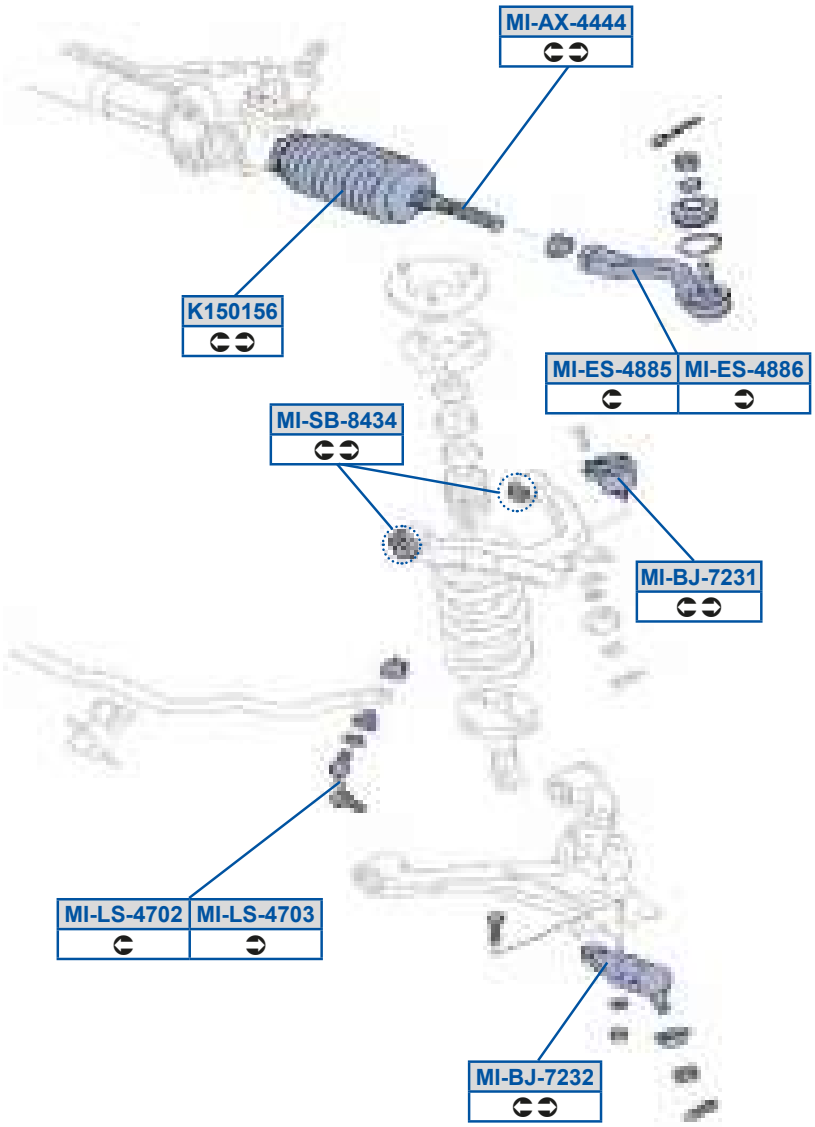
MI-AX-4444
K150156
MI-ES-4885
MI-ES-4886
MI-SB-8434
MI-BJ-7231
MI-LS-4702
MI-LS-4703
MI-BJ-7232

MI-BJ-7233

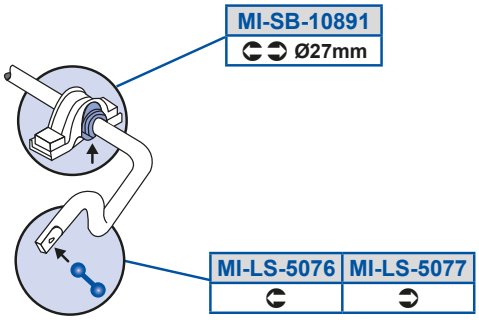
MI-SB-10891
Ø27mm
MI-LS-5076
MI-LS-5077

Y9C89CD
a nC879E83a nC879E9

[V5Zd5BE8A
B7CD087C3a P9DEFED

[V5Oi 5BBBB
a nC879DE

[V5Zd5C8ED
B7CD08883a nB8F7C9

[V5PX5E>A9
B787078C3B787079G

[V5Zd5C8EE
B7CD08893a nB8F7CA

[V5PX5E>A>
B78A07G73B78A07GF

[V5dP598FG9
a nCGB9F9

[V5PX5E>AA
a nC7F8A7

[V5dP5FBAB
B787 07AE /40

[V5Sd5BFFC
BB99077G3a nC7F8AC

[V5Sd5BFFD
BB9907873a nC7F8AD

[V5Zd5BE8>
B7CD087D3a P9DEFEE

[Wdf PWVW

aOXSc_ Wy OgFrh 4gGrh 1	8; 78E	aOXSc_ Wy gt OgG84gF84gFrg1	8; 78E
aOXSc_7dV_Uf] Wy OgFrh 4gGrh 1	9978D	aOXSc_7dV_Uf] gt OgG84gF81	9978D

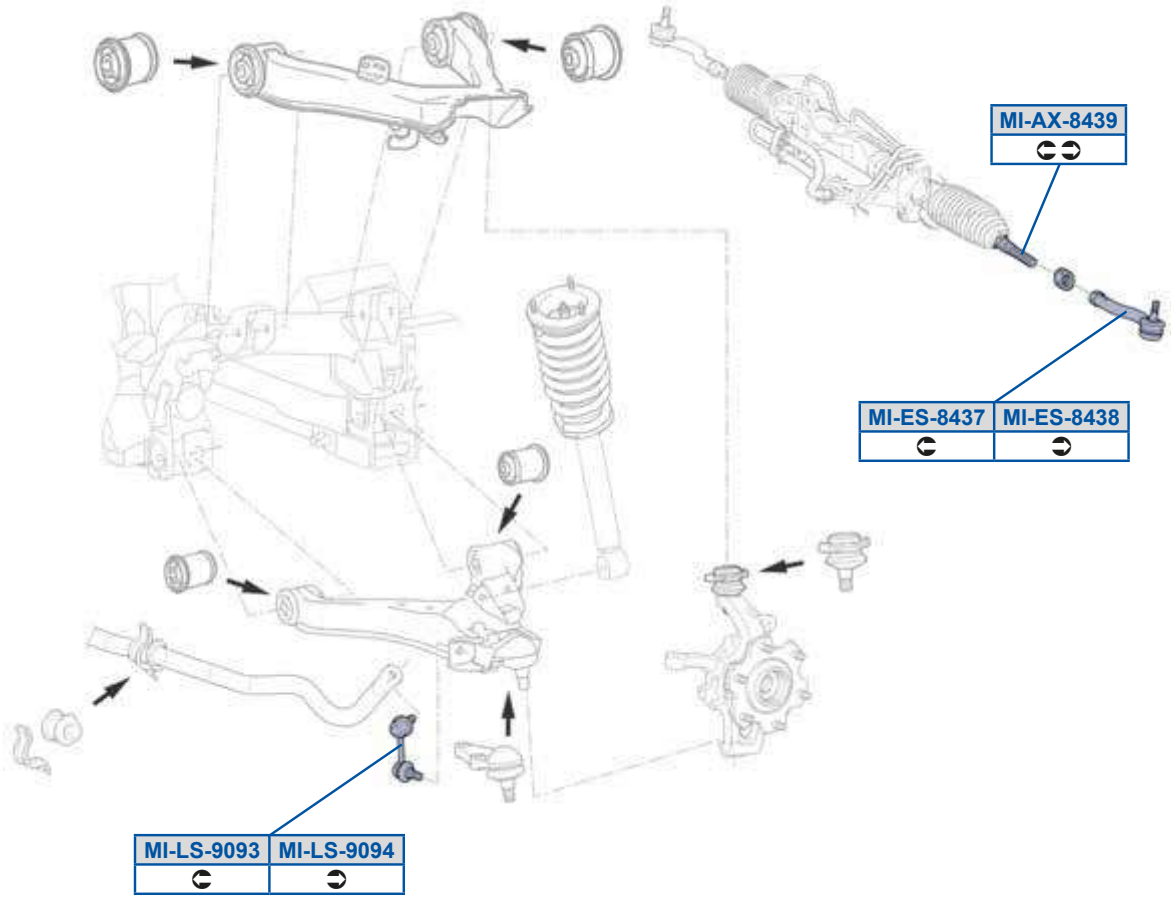

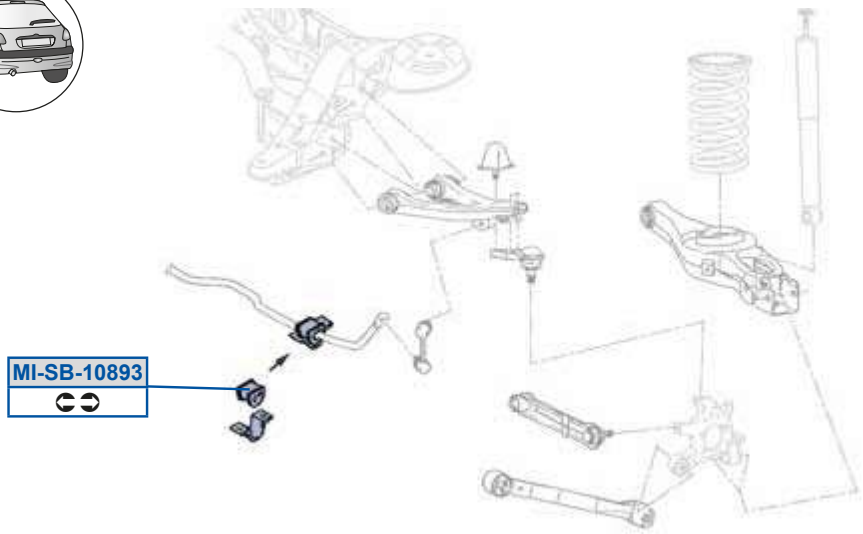

MOOG

[V5Oi 5FBAG
BB9907AD

[V5Sd5FBAE
BB9907AE

[V5Sd5FBAF
BB9907AF

[V5Zd5G8GA
B7CD08AA3a nGG98G8

[V5Zd5G8GB
B7CD08AB3a nGG98G9

[V5dP598FGA
B8CD07B8

[Vdf PWVW ar'v Vg 0-88E 5L1

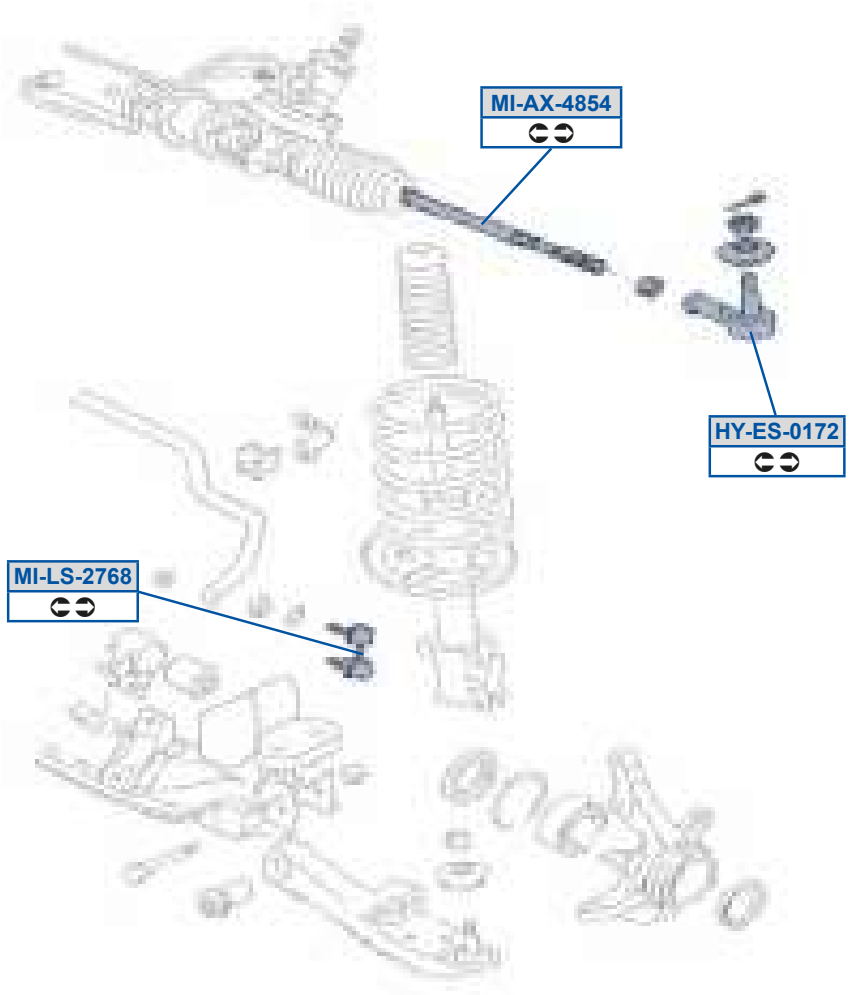
MI-AX-4854
HY-ES-0172
MI-LS-2768

Vj 5Sd589E>

CDFE97AE7873a P8G9BGG

[V5Oi 5BFCB

a nBBF9CC

[V5Zd5>EDF

B7CD078B3a PC8FFG9

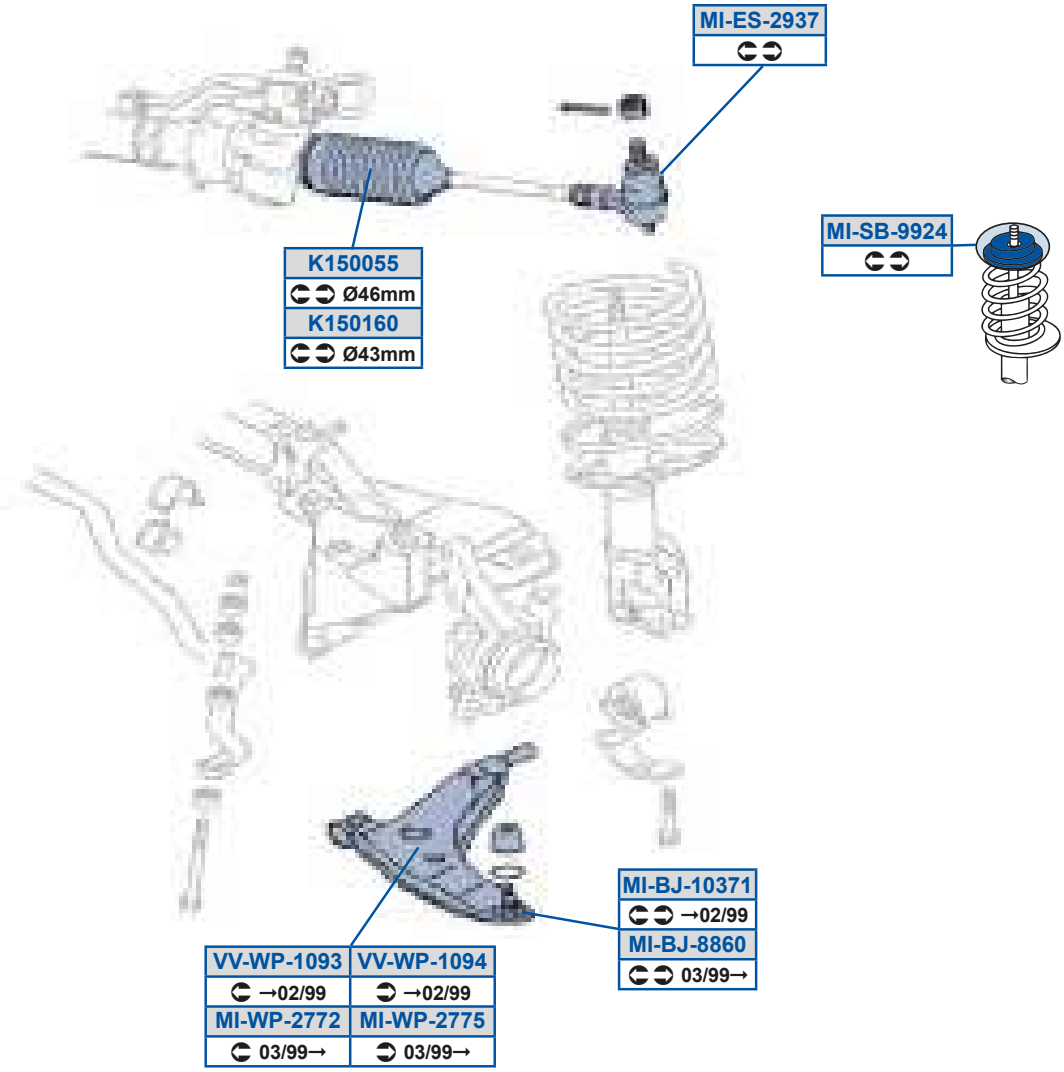

MI-SB-14632

VV-SB-10105

MI-TC-10857	MI-TC-10858

[Wdf PWVW

Y9C88CC
a PAC7CF83a PC78E88

Y9C89D8
a n9BBG79

[V5PX598AE9
0 A88DGG3a P9B8FFA

[V5PX5FFD8
a nG88CDG /403a nG88CE7 /40

[V5Sd5>GAE
BB99079F3a PC9E8DG

[V5dP59BDA>
a n8A7BEG /403a n8A7BF7 /40

[V5dP5GG>B
a n8A8B97

[V5eQ598FCE
a PF7G9993a PG87FB9

[V5eQ598FCF
a PF7G99A3a nBG8ABF

[V5h a5>EE>
a n9GE9B83a nG88CE7

[V5h a5>EEC
a n9GE9B93a nG88CDG

gg5dP59898C
a n8797DA

gg5h a598GA
a d8AAD8E3a n8EGBEG

gg5h a598GB
a d8AAD8F3a n8EGBF7

daOQS cf]] Sc 0] Dr h 1	8F7GG 8F78;	daOQS h OU_] 0] Gr h 4] Fr h 1	987GF 9; 78B

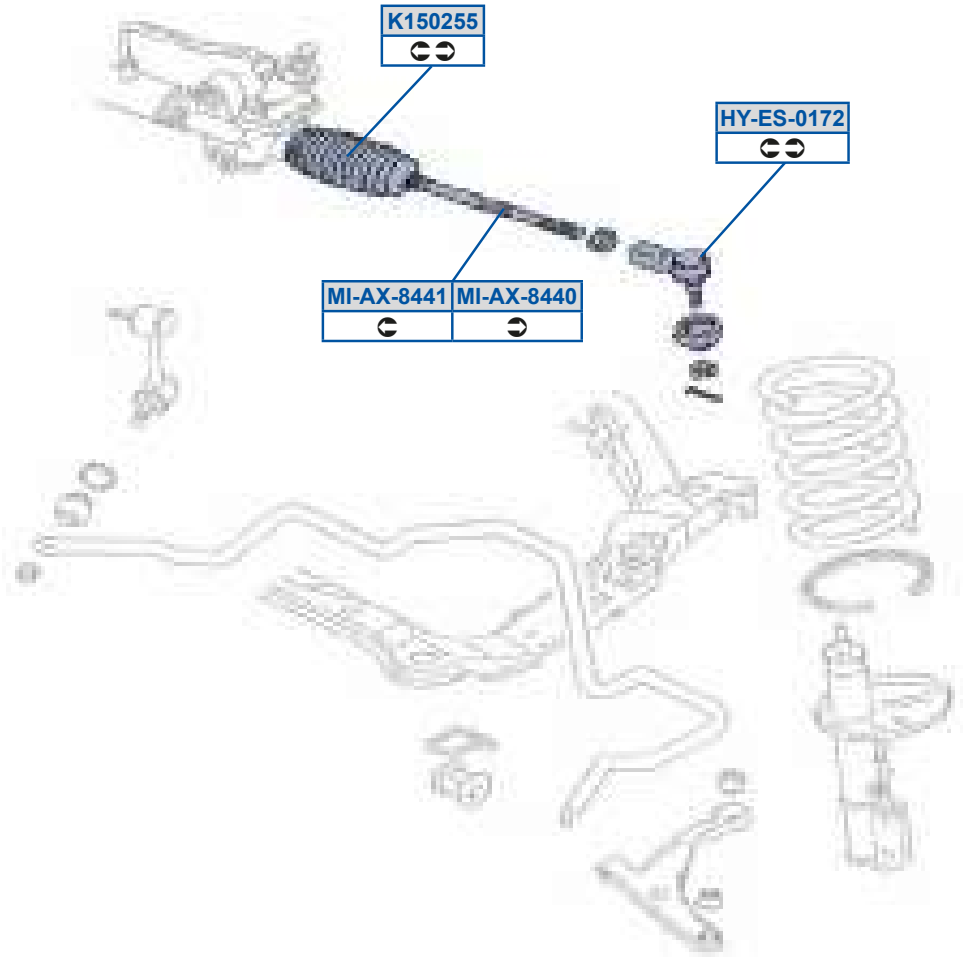

d rtv h rx 5d rtv c v 0GG5L1

Vj 5Sd589E>

CDFE97AE7873a P8G9BGG

Y9C8>CC

a nBCC7GA

[V5Oi 5FBB8

a nBCC7G9

[V5Oi 5FBB9

a nBCC7G8

] WdO]

OZ[Sc O W] 9C1	8E7GC 8E788	OZ[Sc O W/t vÉut v O] 9C1	8E7GC 8A788

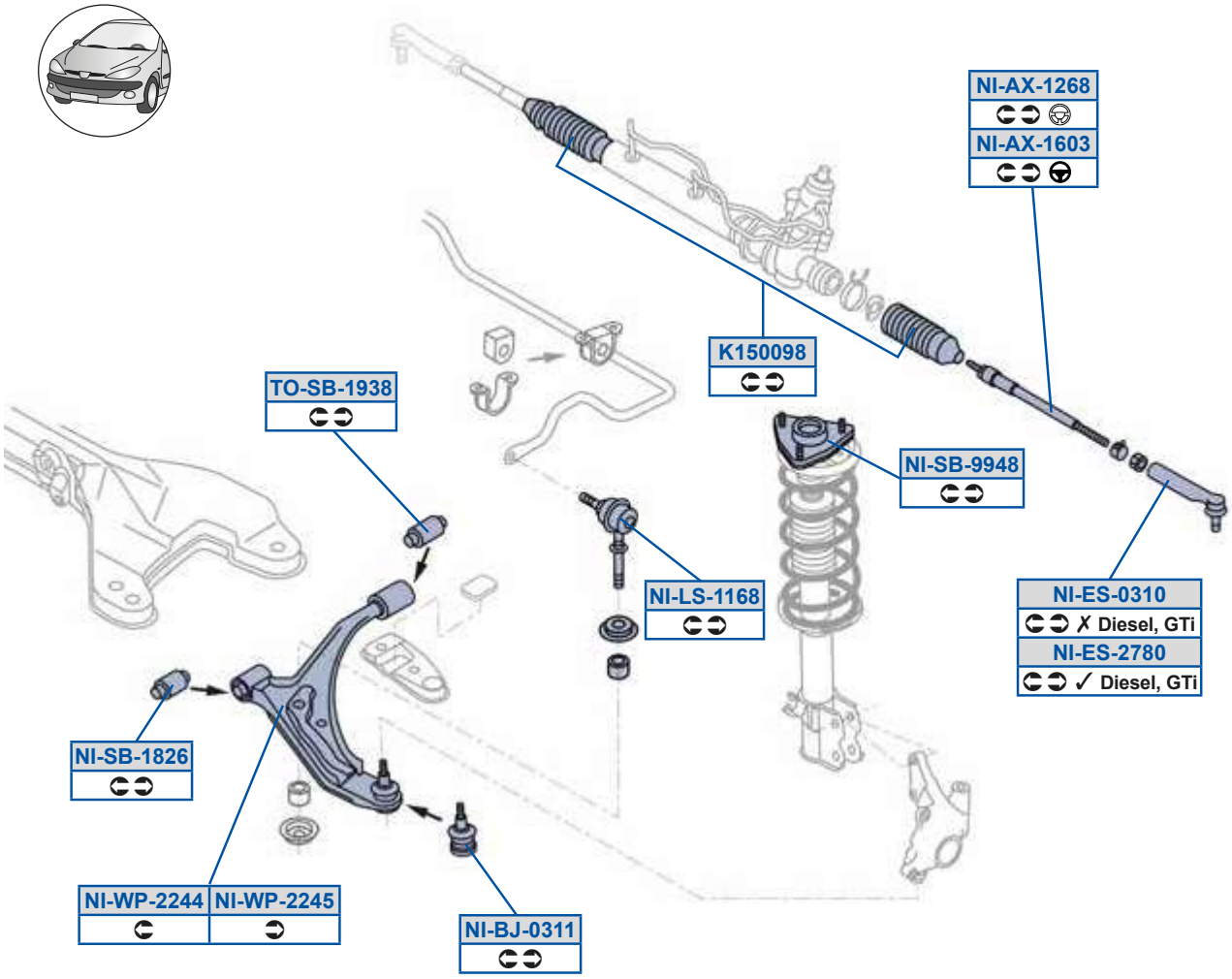

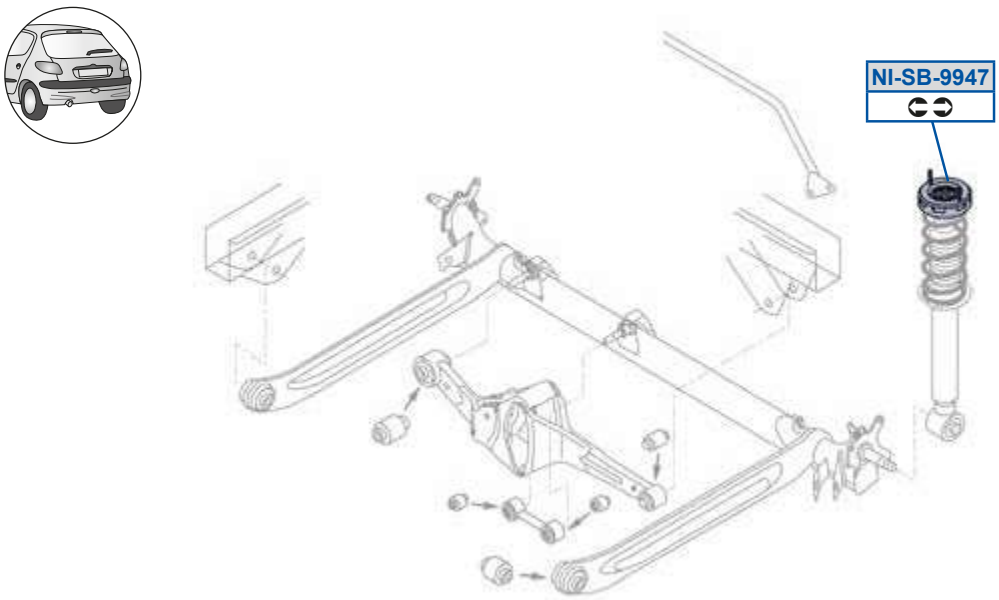

MOOG

Y9C88GF
BF97A7S79C3BF97AB8P9E

] W5dP5GGBE
CD98ED8Z87

] W5OI 59>DF
BFC98C7B773BFC98C7 77

] W5dP5GGBF
CBA97C7 89

] W5OI 59D8A
BF988a 99C3BF988a 9CC

] W5h a5>>BB
CBC787a 7873CBC787a 797

] W5PX58A99
B78D7777783B78D77a 787

] W5h a5>>BC
CBC777a 7873CBC777a 797

] W5Sd58A98
BFC977a 79C3BFC97C7 9C

e_ 5dP59GAF
CBCE77a 797

] W5Sd5>EF8
BFC977Q79C3BFC977a 7FC

] W5Zd599DF
CBD8FC7X973CBD8FC7 77

] W5dP59F>D
CBCD7C7O77

OZ[ScO WOj 9D1	8D788	OZ[ScO WWt vÉut v Oj 9D1	89788

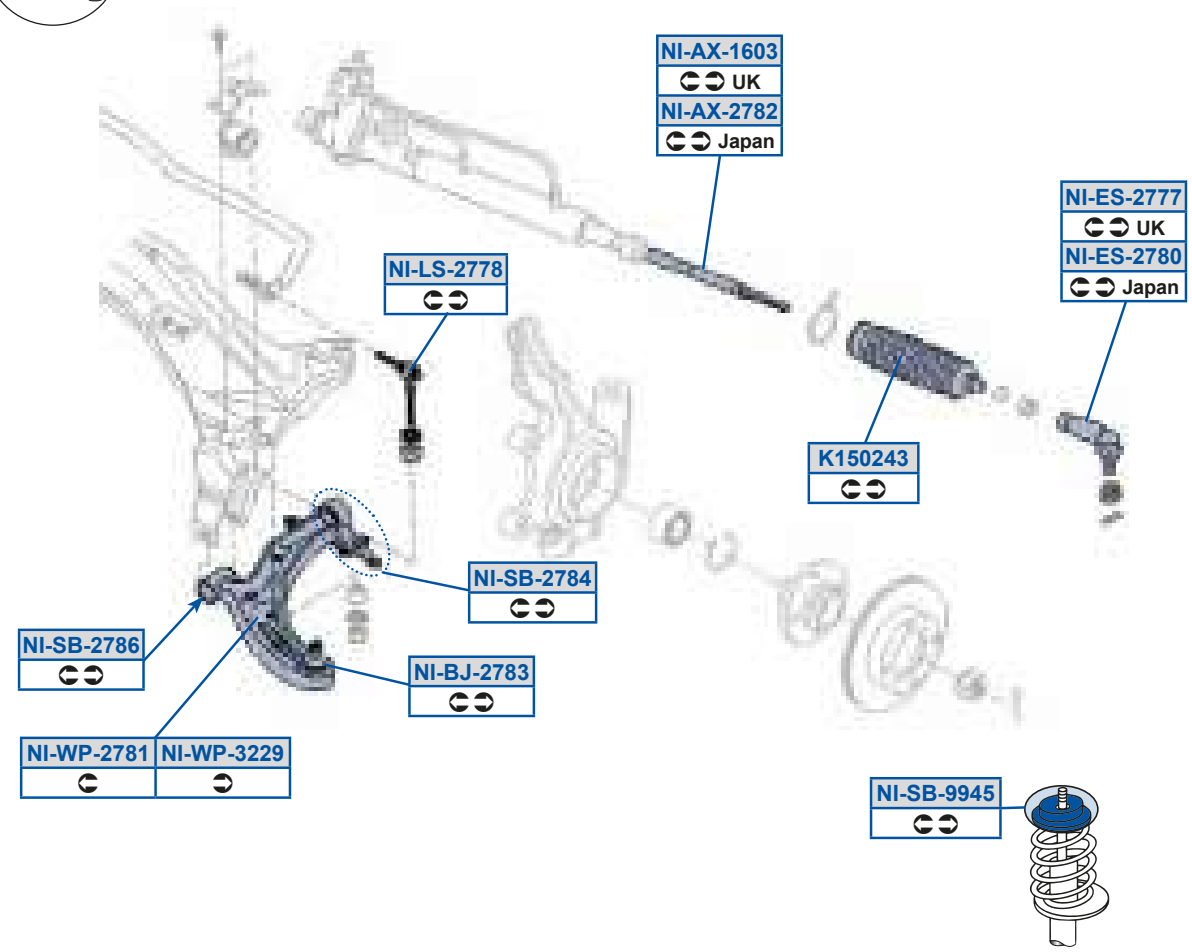

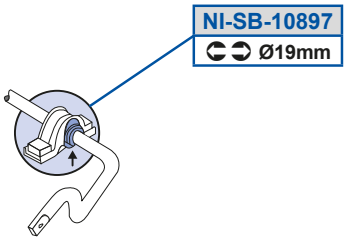

Y9C8>BA
BF97AO D773BF97APa B77

] W5dP5>EFB
CBC77Pa B87 /40

] W5OI 59D8A
BF988a 99C3BF988a 9CC

] W5dP5>EFD
CBC77Pa B87 /40

] W5OI 5>EF>
BFC98Ba C773BFC98Ba C9E

] W5dP5GGBC
CBA97Ba F77

] W5PX5>EFA
B78D7Ba B773B78D7Ba B87

] W5h a5>EF9
CBC78Ba B773CBC78Ba B87

] W5Sd5>EEE
BFC97Pa B9C

] W5h a5A>>G
CBC77Ba B773CBC77Ba B87

] W5Sd5>EF8
BFC977Q79C3BFC977a 7FC

] W5Zd5>EEF
CBD8FBa B77

] W5dP598FGE
CBD8ABa B973CBD8AB 777

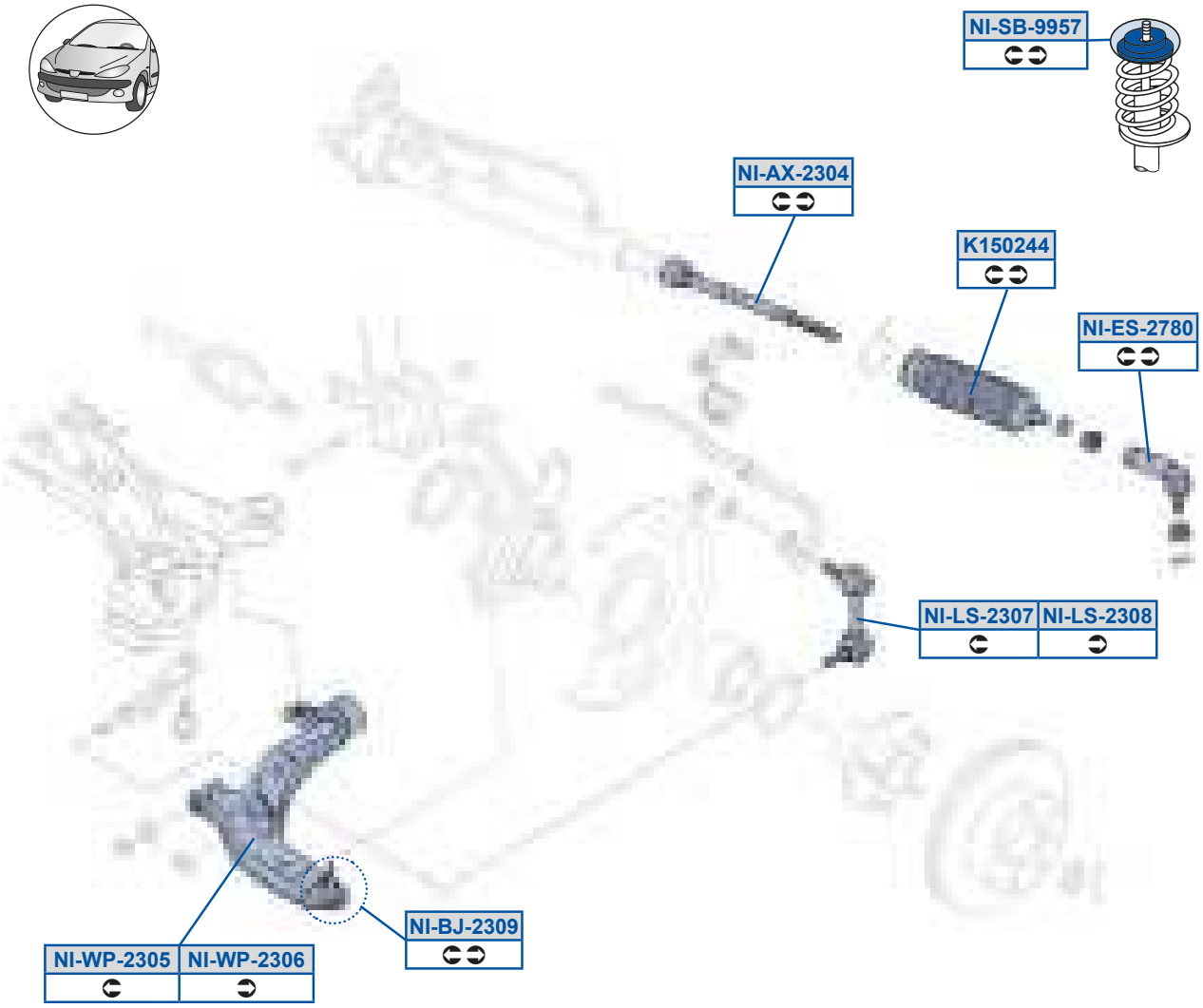
NI-SB-9957
NI-AX-2304
K150244
NI-ES-2780
NI-LS-2307
NI-LS-2308
NI-BJ-2309
NI-WP-2305
NI-WP-2306

Y9C8>BB
BF97ABa C9C3BF97ABa C9D

] W5Oi 5>A8B
BFC98Bu7773BFC98Bu7FC

] W5PX5>A8G
B78D79 777

] W5Sd5>EF8
BFC977Q79C3BFC977a 7FC

] W5Zd5>A8E
CBDDFBu777

] W5Zd5>A8F
CBD8FBu777

] W5dP5GGCE
CBA97OuE78

] W5h a5>A8C
CBC78Bu7793CBC78Bu789

] W5h a5>A8D
CBC77Bu7793CBC77Bu789

WeScdeOc P Ó E81	8B78;	WeScdeOc P Ó E81	8B78;
WeScdeOc a t y 7QÉt é	8F78A		

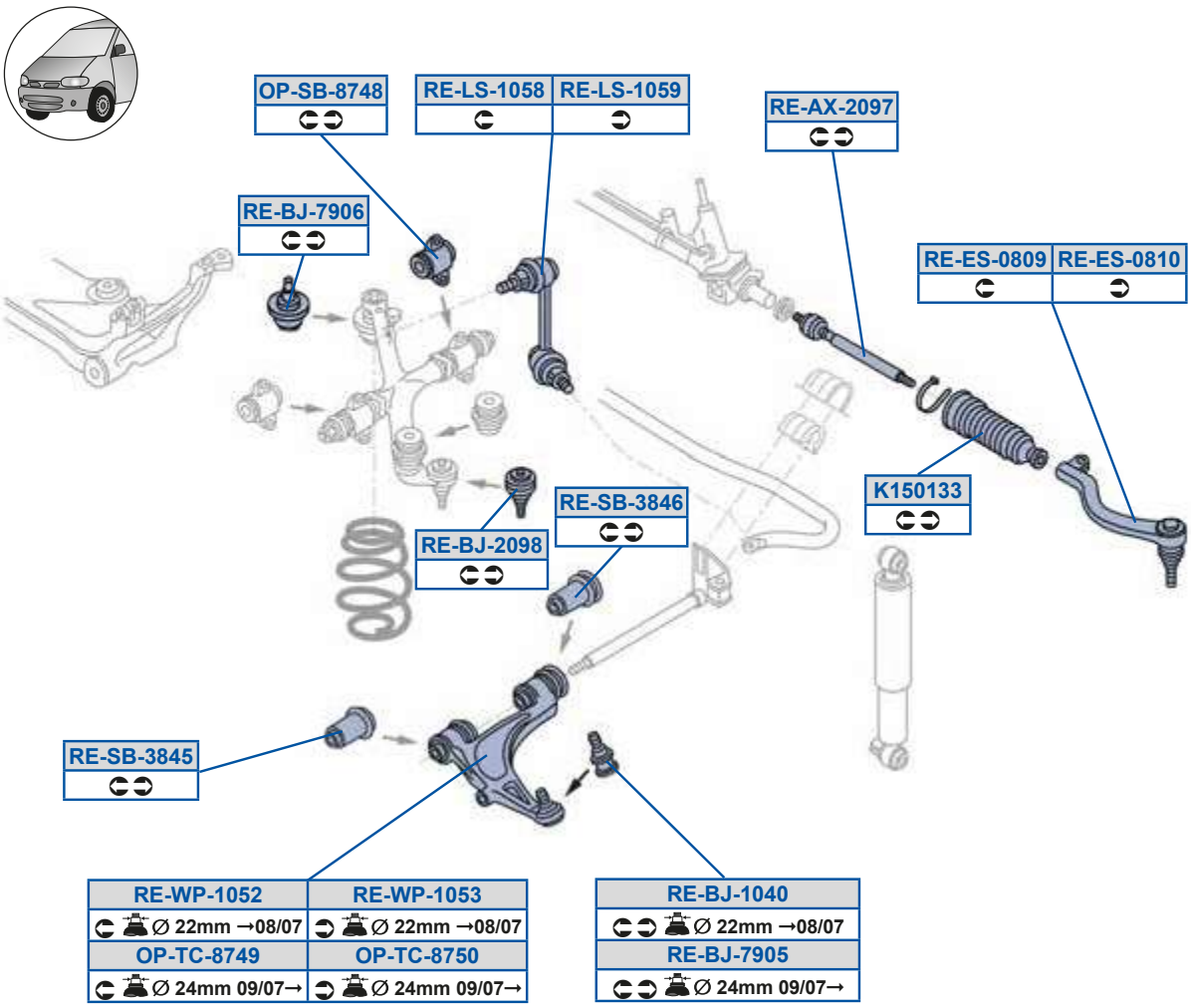

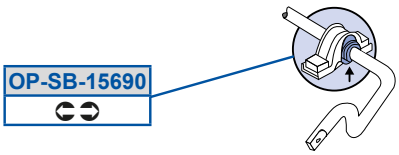

Y9C89AA
D79CAE79A8

_ a5dP59CDG8
CDA8C77I 00

_ a5dP5FEBF
CBBC777I 00

_ a5eQ5FEBG
CBC7877I 7S3F977EC79EA

_ a5eQ5FEC8
CBC7777I 7S3F977EC79EB

c S5Oi 5>8GE
BFC9877I 7P3BFC9877I 0T

c S5PX598B8
B78D7777OQ3B78D7777OR

c S5PX5>8GF
B78D777I 0P

c S5PX5EG8C
B78D777I 7P

c S5PX5EG8D
B788777I 003B788777I 0P

c S5Sd58F8G
BFC9777I 0V

c S5Sd58F98
BFC9777I 0X

c S5Zd598CF
CBD8D77I 7Q3CBD8D77I 0P

c S5Zd598CG
CBD8F77I 703CBD8F77I 7Q

c S5dP5AFBC
BC777GC3CBB9A77I 00

c S5dP5AFBD
BC777GB3CBCE777I 00

c S5h a598C>
CBC7877I 7Q3CBC7877I 0Q

c S5h a598CA
CBC7777I 7Q3CBC7777I 0Q

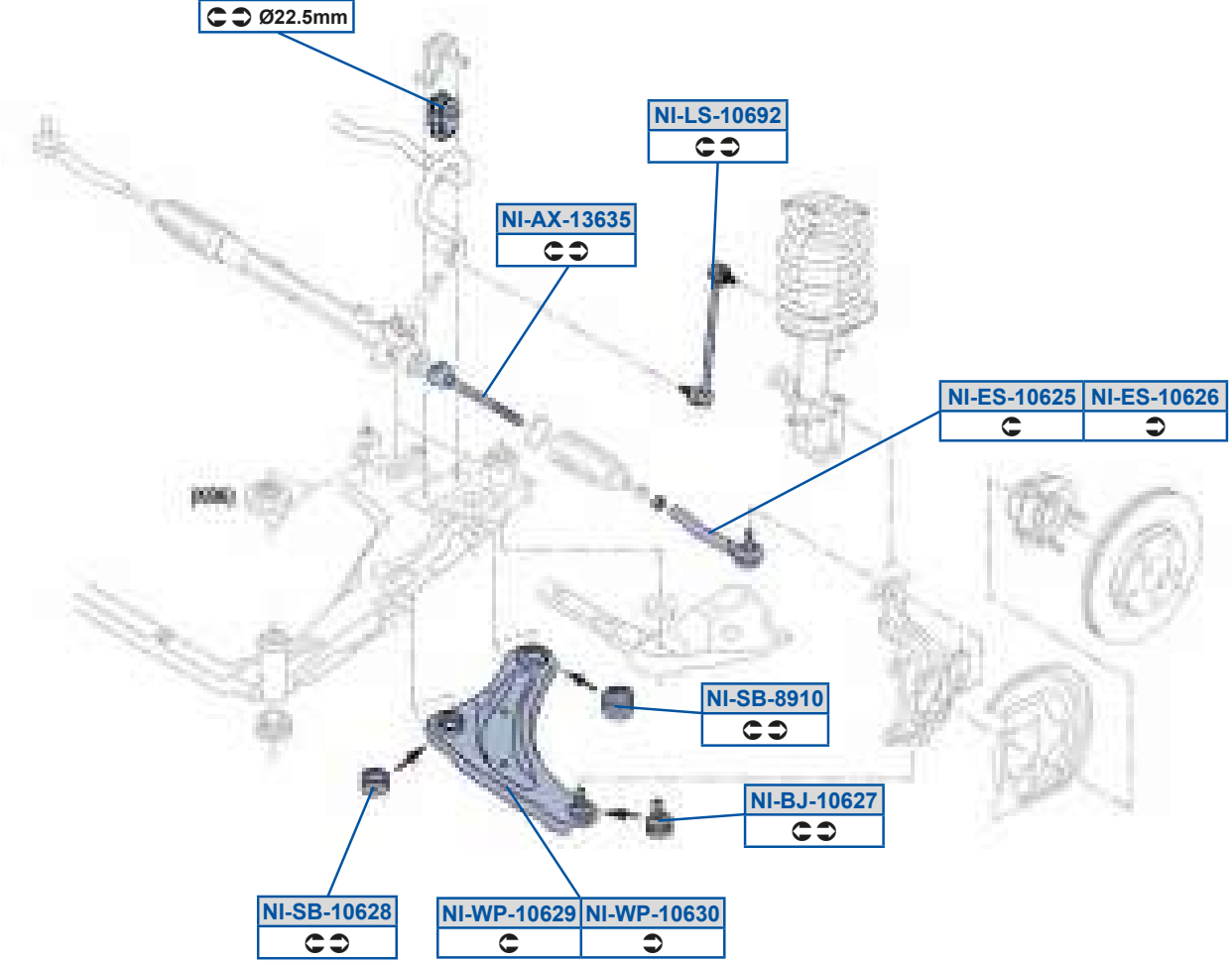
NI-SB-13699
Ø21mm
NI-SB-10702
Ø22.5mm
NI-LS-10692
NI-AX-13635
NI-ES-10625
NI-ES-10626
NI-SB-8910
NI-BJ-10627
NI-SB-10628
NI-WP-10629
NI-WP-10630

4x2

4x4

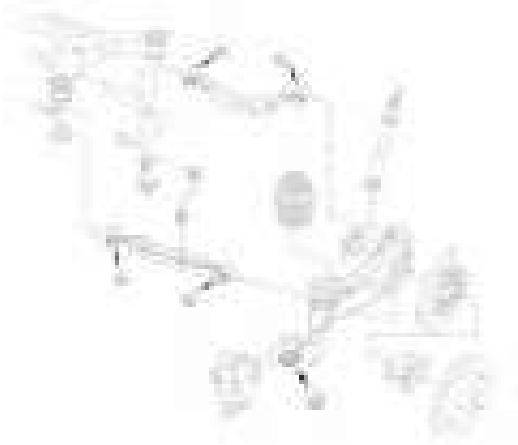

] V5Oi 59ADAC
RFC988Y070

] V5dP5FG98
CBC77XR777 /40

] V5PX598D>E
CBC778Y07P /40

] V5h a598D>G
CBC788Y0703CBC788Y07P

] V5Sd598D>C
RFDB78Y070

] V5h a598DA8
CBC778Y0703CBC778Y07P

] V5Sd598D>D
RFC978Y070

] V5Zd598DG>
CBD8FQ 770

] V5dP598D>F
CBC778Y07P /40

] V5dP598E8>
CBD8AXR7A0

] V5dP59ADGG
CBD8AXR7B0

Yf PWeOc Ci ED1	8F78A 9878G	Yf PWeOc P	8F78A

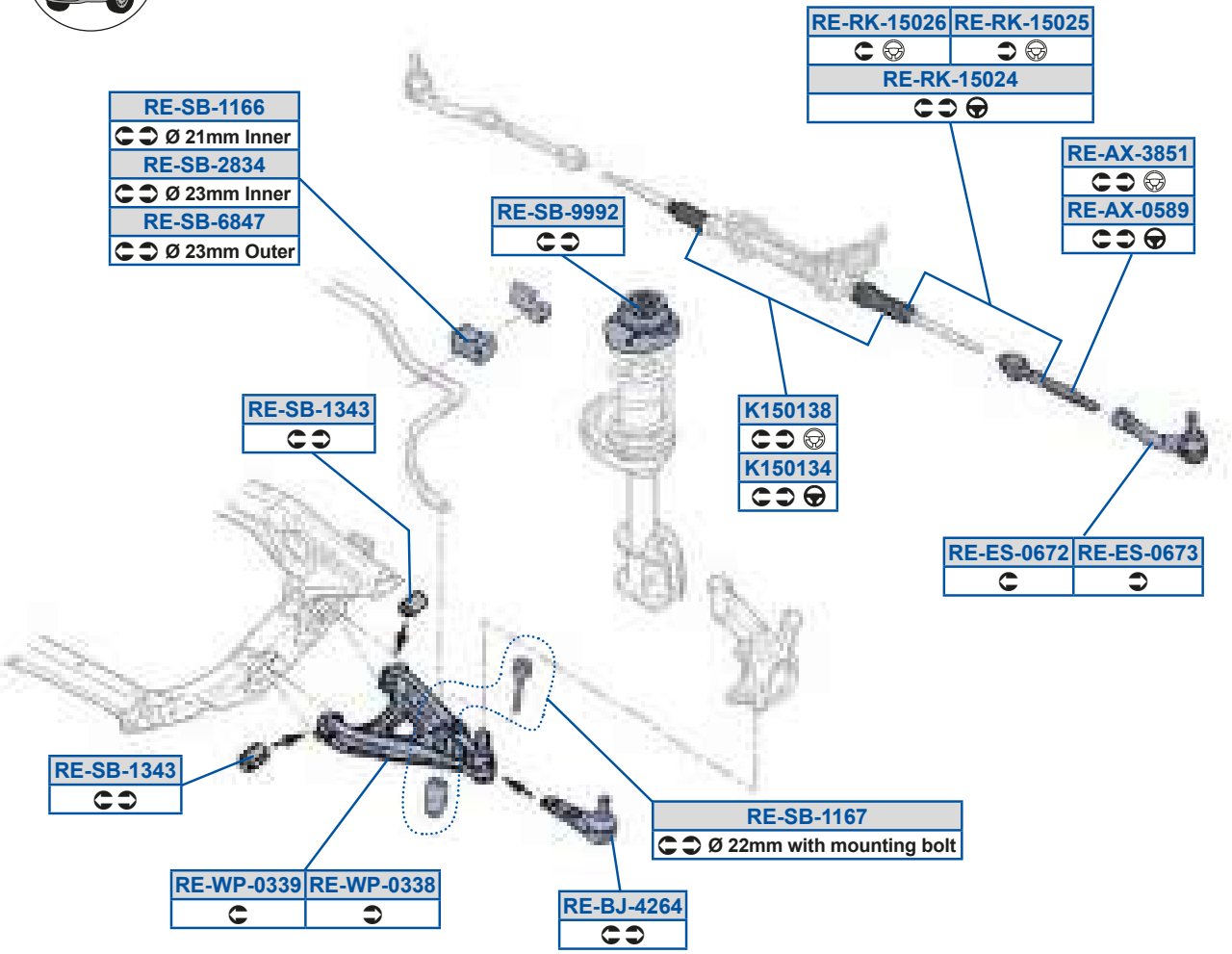

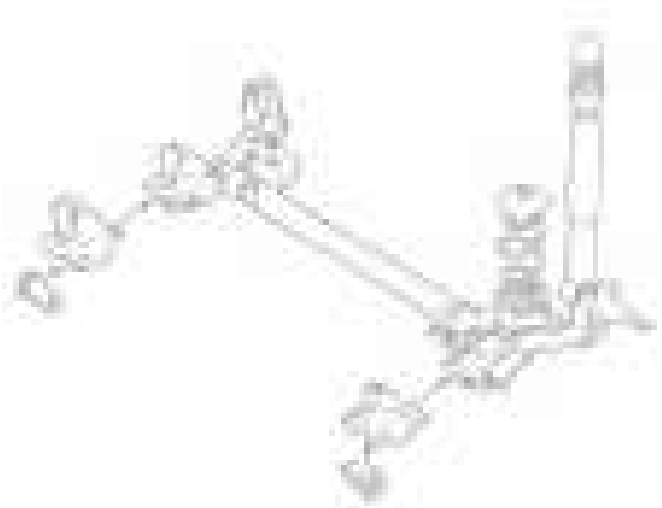

MOOG

Y9C89AB
BF97A77I 00

Y9C89AF
D77779CBGE

c S5Oi 58CFG
BFC9877I 0U

c S5Oi 5AFC9
BFC9877I 00

c S5PX5B>DB
CBC7877I 0V

c S5Sd58DE>
BFC9777I 0d3BFDB70 D79

c S5Sd58DEA
BFC9777I 0i 3BFC970 D79

c S5cY59C8>B
BFC9877I 0U

c S5cY59C8>C
BFC9877I 00

c S5cY59C8>D
BFC9877I 00

c S5dP599DD
CBD8A477I 0R

c S5dP599DE
CBD8D77I 00

c S5dP59ABA
CBCD777I 0P

c S5dP5>FAB
EE 77 FAC G9G

c S5dP5DFBE
F9778C7ECG

c S5dP5GGG>
CBA077A77n

c S5h a58AAF
CBC7777I 7a 3CBC7777I 80

c S5h a58AAG
CBC7877I 7U3CBC7877I 7Z

] WdO]

[Oi W O 7 [Oi W O bi W OOA; 1	897GC 8F788	[Oi W O bi OOA; 1	8A7GB 8F788
[Oi W O d t é h t'	987GE 9; 788		

[r z r bi 0 9879GGB 5L 8F7>8881

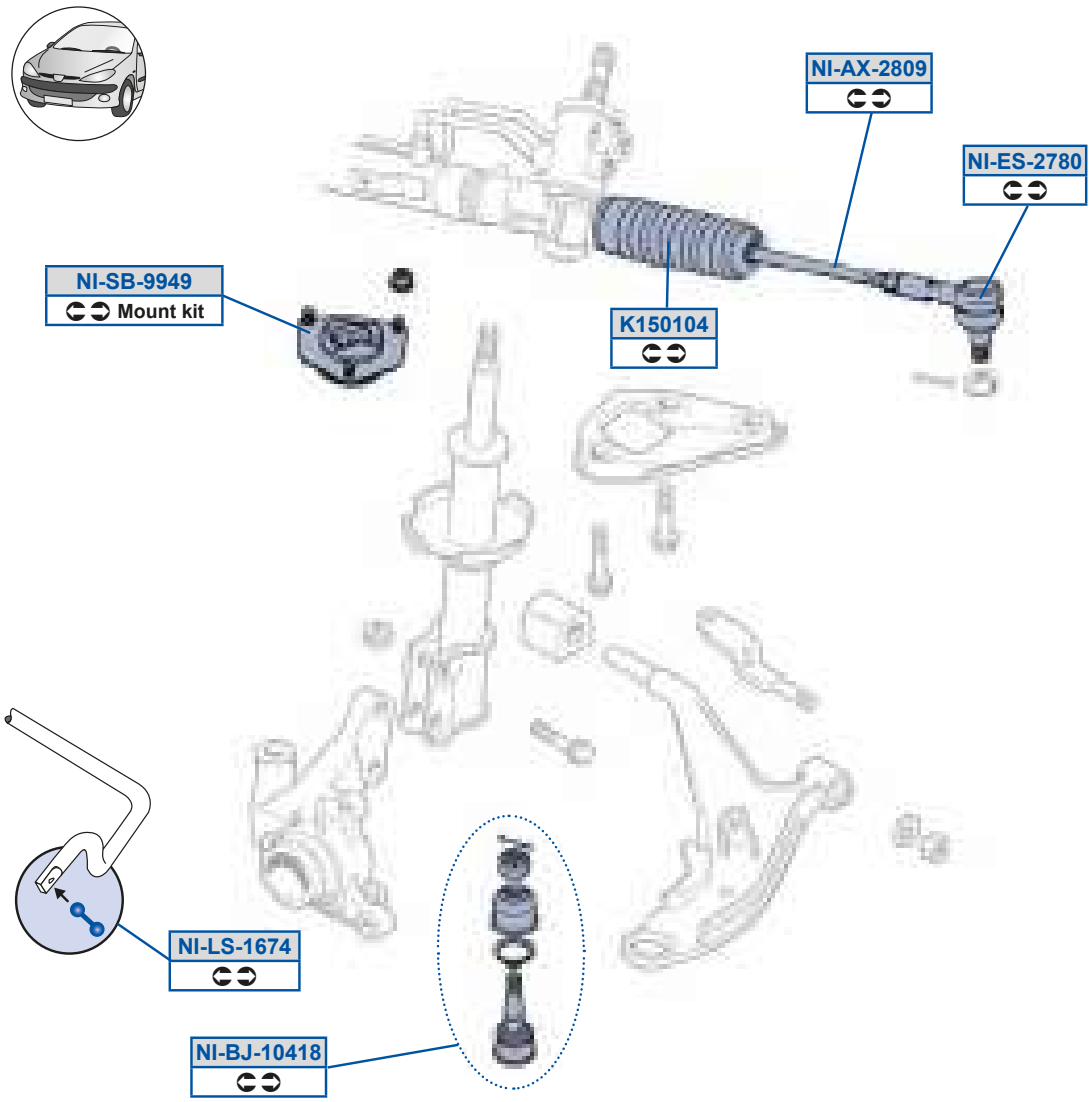

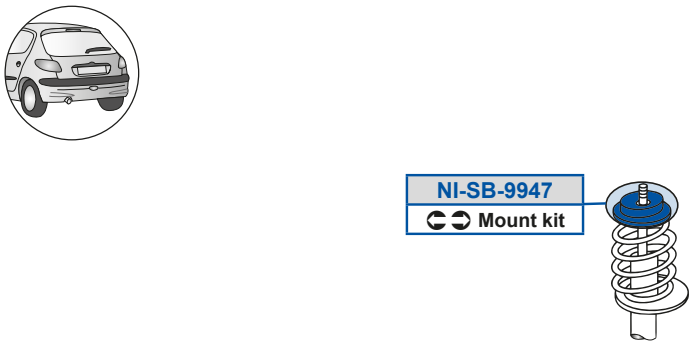

] WdO]

MOOG

Y9C898B
BF97A7S79C

] W5Oi 5>F8G
BFC977Q79C3BFC987Q77C

] W5PX598B9F
B78D778S9C3B78D7E7X77

] W5Sd5>EF8
BFC977Q79C3BFC977a 7FC

] W5Zd59DEB
CBD8F7S7773CBD8FeS777

] W5dP5GGBE
CD98ED8Z87

] W5dP5GGBG
CBA9CA8u78

] WdO]

[WQc O Q3 Q 0Y9; 1	8F78C	[WQc O WWOY9; 1	8978A 8D798

[zt r IY9>n0-88A 5L1

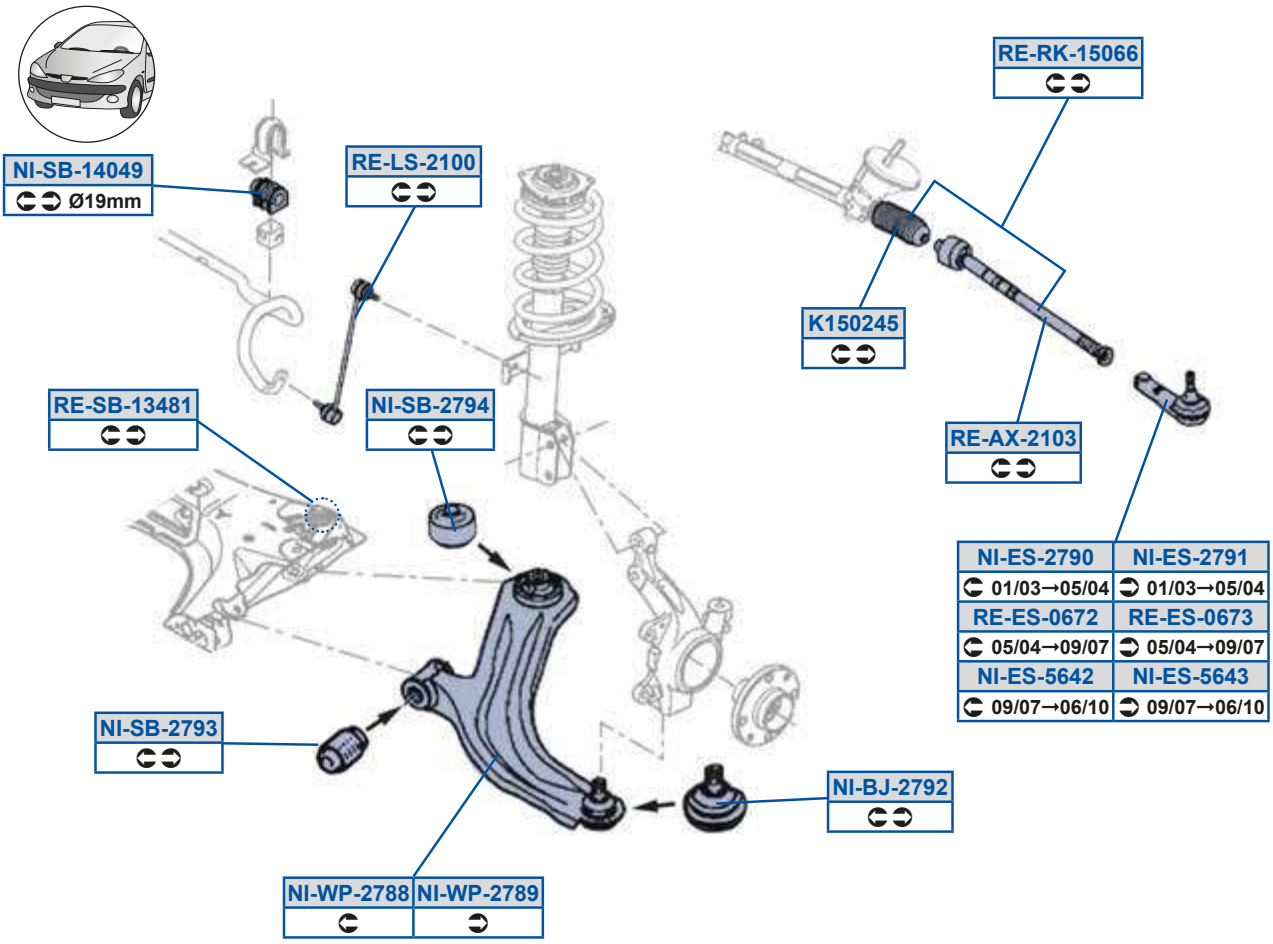

] WdO]

MOOG

Y9C8>BC
BF97A0 D77

] V5dP5>EGB
CBCE70 D773F9778FACE7

c S5dP59ABF9

] V5PX5>EG>
B78D70 777

] V5h a5>EFF
CBC780 D773CBC780 D7P

] V5Sd5>EG8
BFDB70 D77

] V5h a5>EFG
CBC770 D773CBC770 D7P

] V5Sd5>EG9
BFC970 D77

c S5Oi 5>98A
EE78 BEC FB8

] V5Sd5CDB>
BFD9E8uD803BFDBE8uD80

c S5Sd58DE>
BFC9777l 0d3BFDB70 D79

] V5Sd5CDBA
BFC9E8uD803BFDBE8uD80

c S5Sd58DEA
BFC9777l 0i 3BFC970 D79

] V5dP59B8BG
CBD8A40 D79

c S5Zd5>988
CBD8FGu7703CBD8F0 D77

] V5dP5>EGA
CBCD70 D77

c S5c Y59C8DD
EE78 BEC FB8

[WQc O Wg 0Y9A1	8C798		

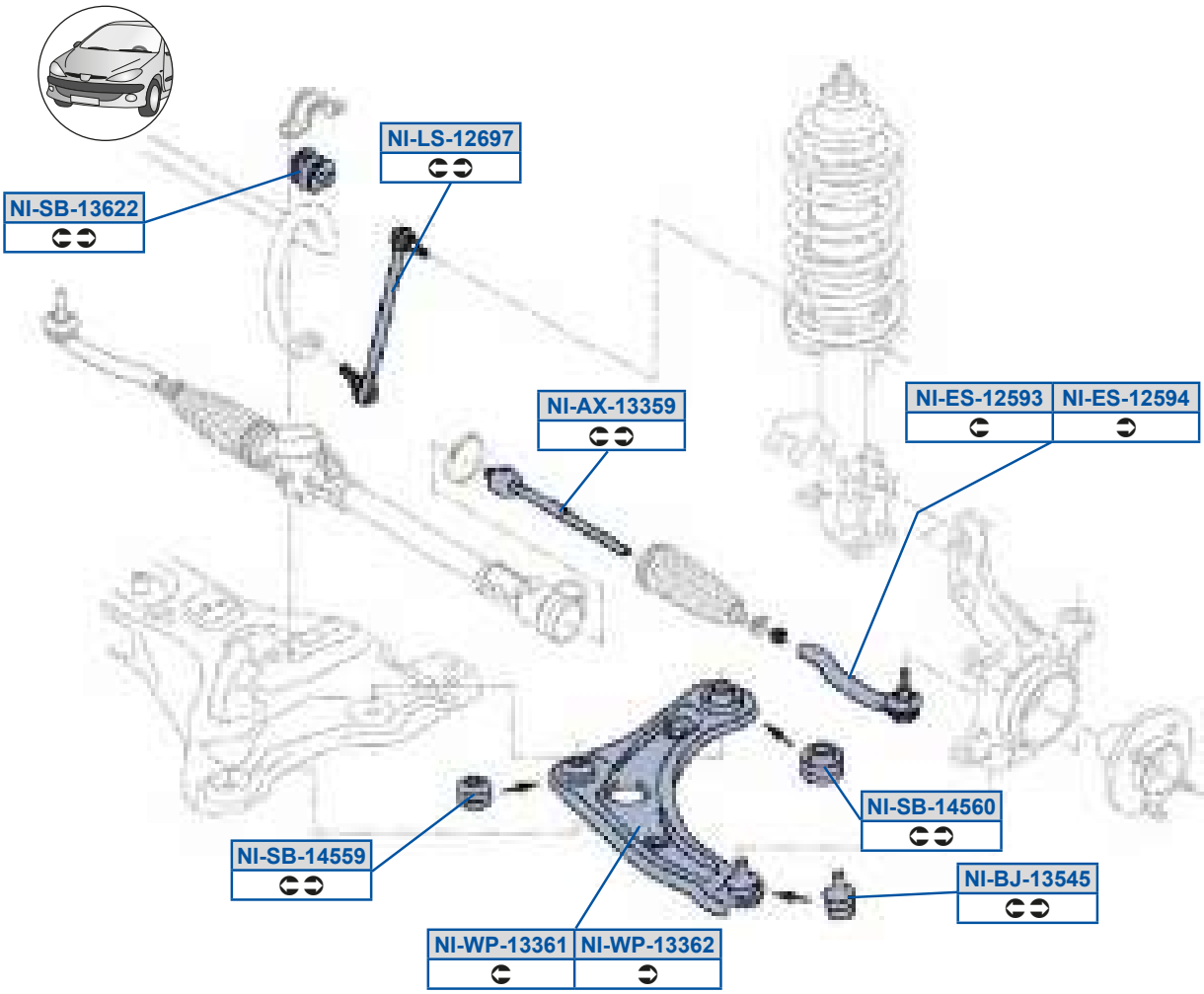

MOOG

] V5OiA59AACG
RFC988V07O3RFC988VX7O

] V5PX59ACBC
CBC77 8V07Q /40

] V5Sd59>CGA
RFDB78V07O

] V5Sd59>CGB
RFC978V07O

] V5Zd59>DGE
CBD8F8TS7O3CBD8FGu77O

] V5dP59AD>>
CBD8A8V07O

] V5dP59BCCG
CBC778V07Q /40

] V5dP59BCD8
CBC778V07Q /40

] V5hA59AAD9
CBC788V07Q3CBC788V0C0

] V5hA59AAD>
CBC778V07Q3CBC778V0C0

[zt r IY9An0>898 5L1

] WdO]

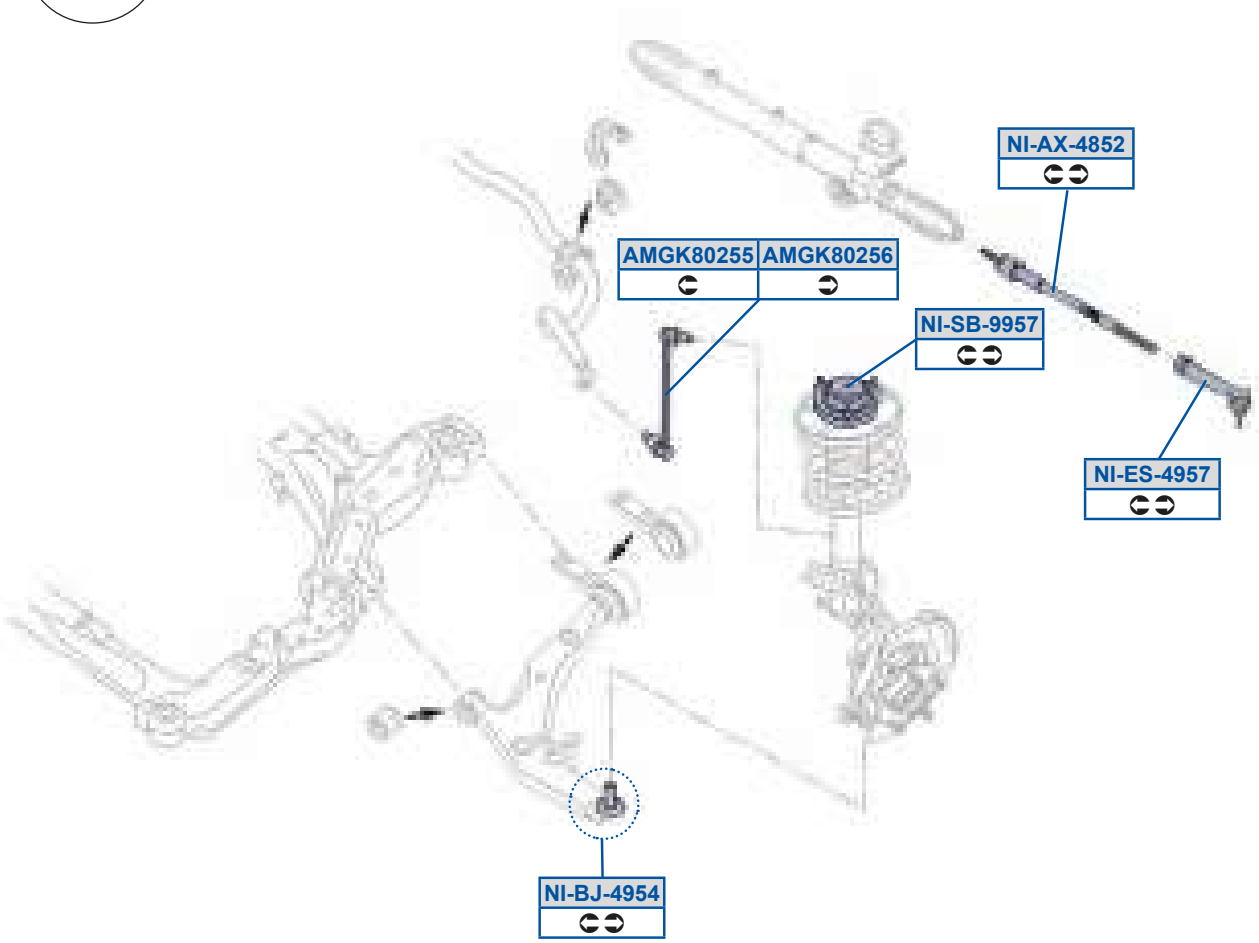
NI-AX-4852
AMGK80255
AMGK80256
NI-SB-9957
NI-ES-4957
NI-BJ-4954

O[UYF8>CC
CBDDFQ0777

O[UYF8>CD
CBD8FQ07773CBD8FQY777

] V8Oi 5BFC>
BFC98QP79C3BFC98QP79D

] V8PX5BGCB
CBC77QQB70 /40

] V8Sd5BGCE
BFC97QP79C3RFC97QP79C

] V8dP5GGCE
CBA97OuE78

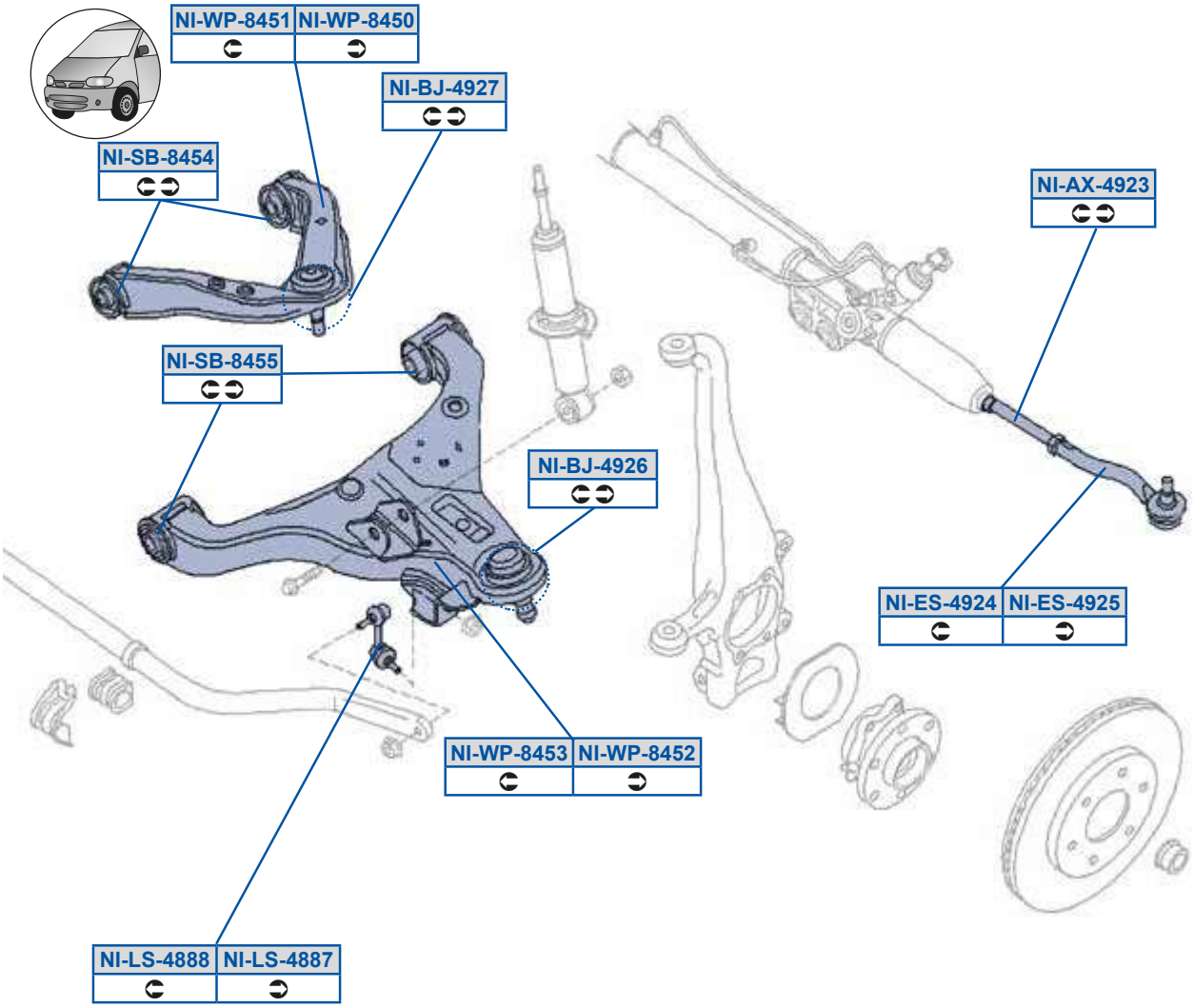
NI-WP-8451
NI-WP-8450
NI-BJ-4927
NI-SB-8454
NI-AX-4923
NI-SB-8455
NI-BJ-4926
NI-ES-4924
NI-ES-4925
NI-WP-8453
NI-WP-8452
NI-LS-4888
NI-LS-4887

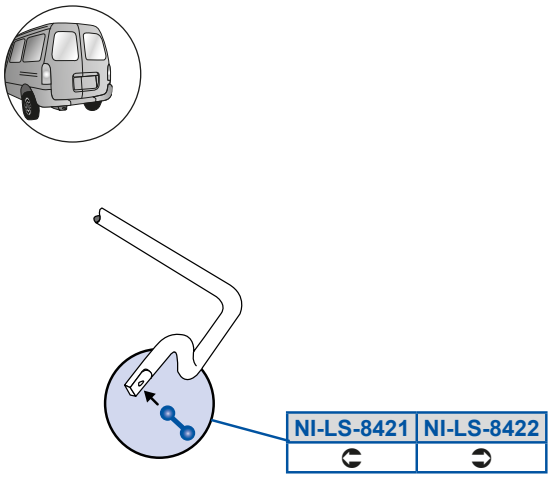
NI-LS-8421
NI-LS-8422

] V5Oi 5BG>A
BFC98SO777

] V5Zd5FB>>
CD9D8SOC77

] V5PX5BG>D
CBC77SPA77 /40

] V5dP5FBCB
BCBC9BSPA70 /40

] V5PX5BG>E
CBC9BSPA77 /40

] V5dP5FBCC
CBC77SPA80 /40

] V5Sd5BG>B
BFC97SO78X3BFDB7SO78X

] V5h a5FBC8
CBC9BSPA70

] V5Sd5BG>C
BFDB7SO78X

] V5h a5FBC9
CBC9CSPA70

] V5Zd5BFFE
CBD8FSO787

] V5h a5FBC>
CBC77SPA773CBC77SPA80

] V5Zd5BFFF
CBDDFSO7873CBDDFSPA70

] V5h a5FBCA
CBC78SPA773CBC78SPA80

] V5Zd5FB>9
CD9D8SOC87

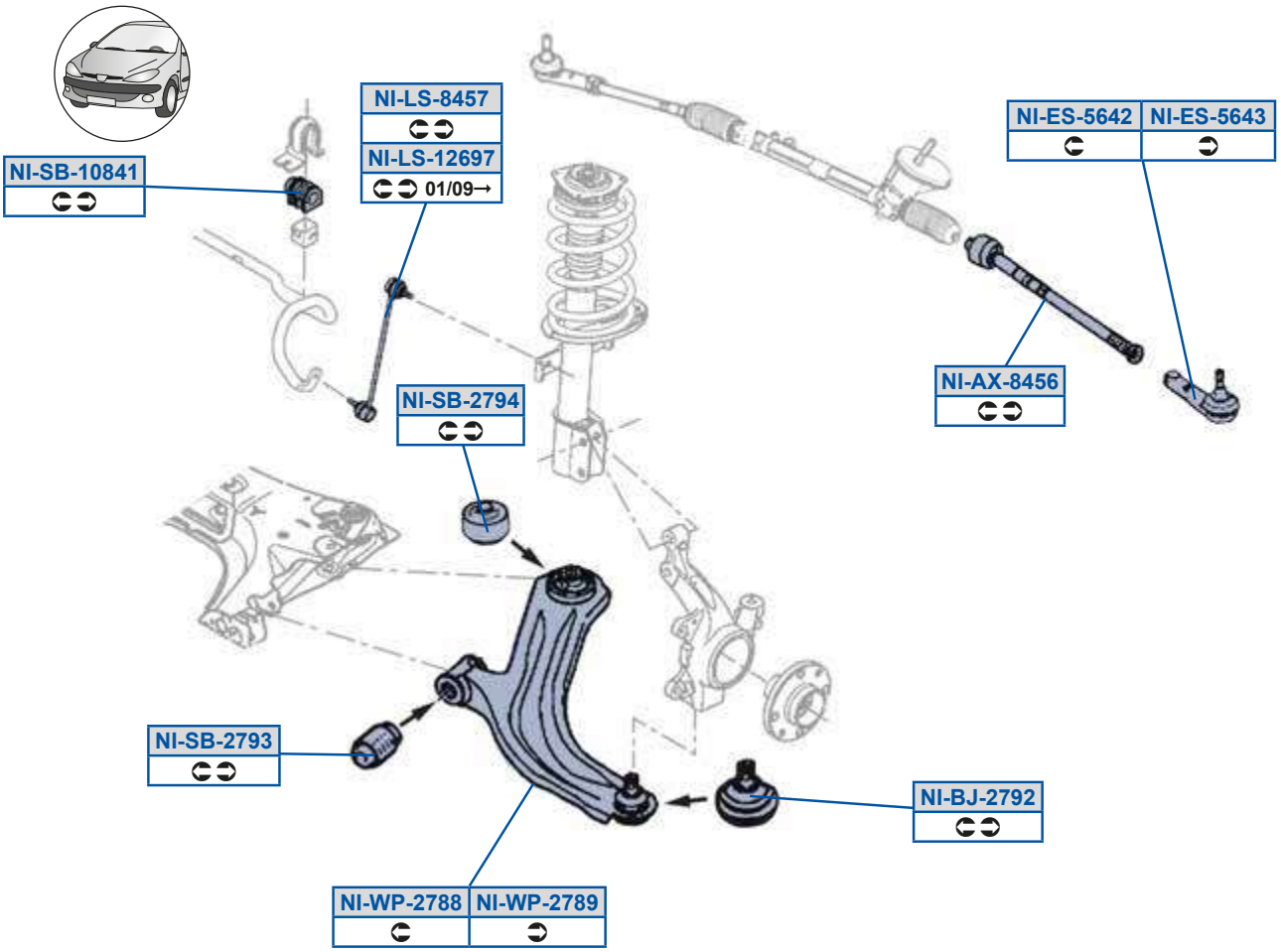
NI-LS-8457
NI-LS-12697
01/09→
NI-SB-10841
NI-ES-5642
NI-ES-5643
NI-AX-8456
NI-SB-2794
NI-SB-2793
NI-BJ-2792
NI-WP-2788
NI-WP-2789

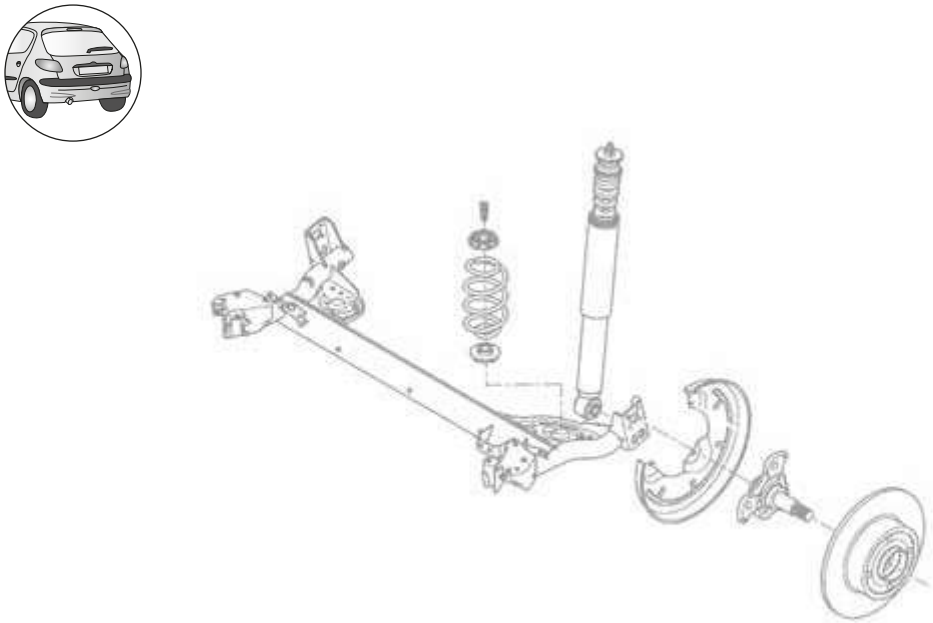

] V5Oi 5FBCD
BFC98Au79C

] V5dP5>EGB
CBCE70 D773F9778FACE7

] V5PX5>EG>
B78D70 777

] V5h a5>EFF
CBC780 D773CBC780 D7P

] V5Sd5CDB>
BFD9E8uD803BFDBE8uD80

] V5h a5>EFG
CBC770 D773CBC770 D7P

] V5Sd5CDBA
BFC9E8uD803BFDBE8uD80

] V5Zd59>DGE
CBD8F8TS703CBD8FGu770

] V5Zd5FBCE
CBD8FGu770

] V5dP598FB9
CBD8AGu777

] V5dP5>EGA
CBCD70 D77

] WdO]

] gB88 P	99799	] gB88 P	99799 8G79D
] gB88 a t y 7QÉt é	99799		

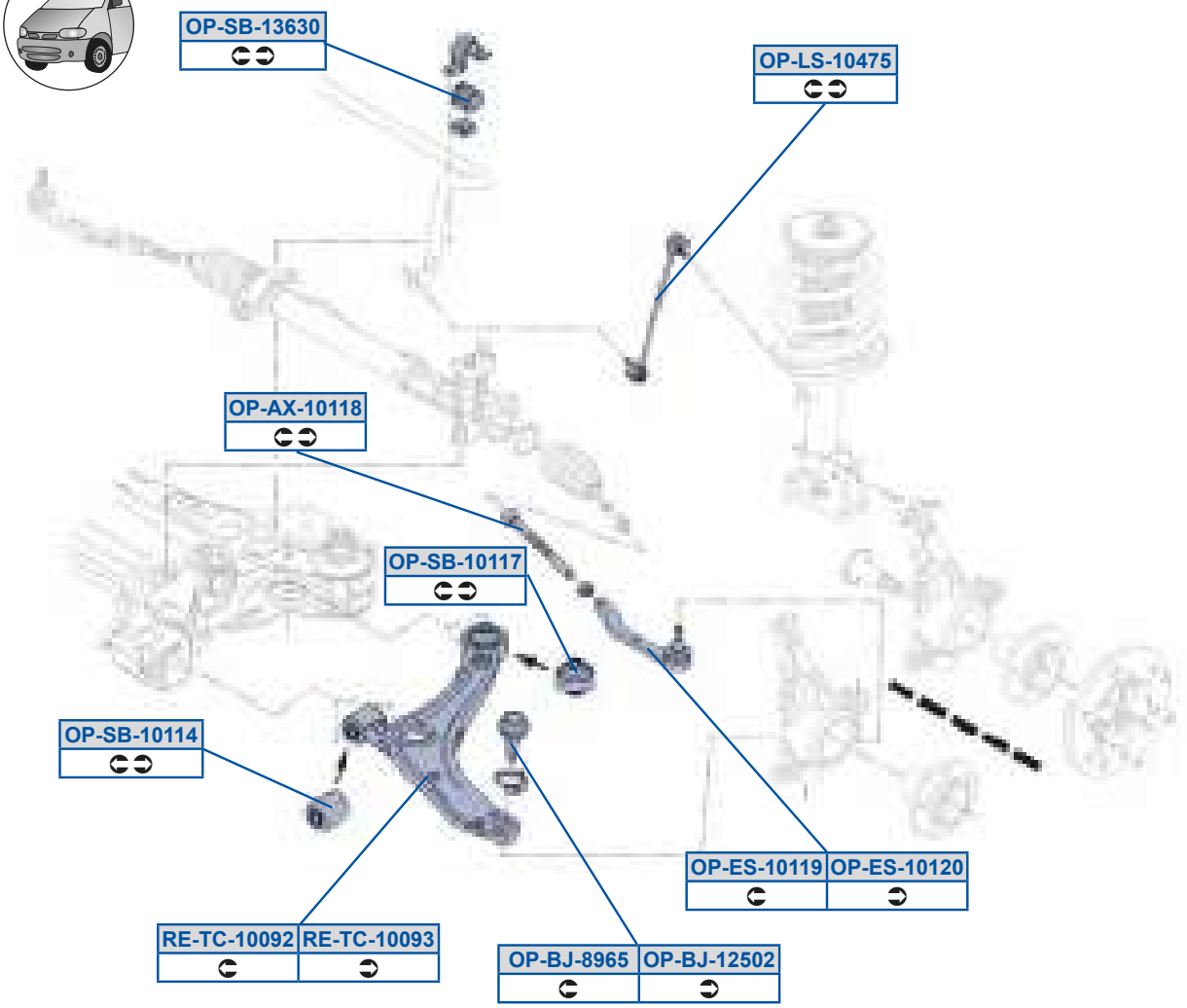

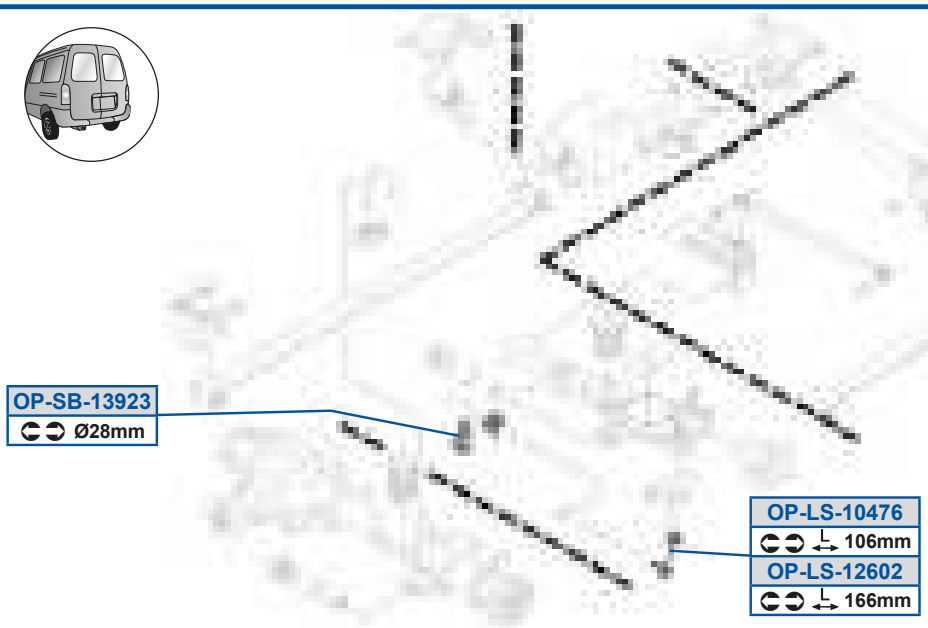

MOOG

_ a5Oi 59899F
BFC9877I 7S3BFC9877I 7SoY

_ a5dP59899B
F977DFFFE8 /40

_ a5PX59>C8>
F977DFFFEE

_ a5dP59899E
F977DFFFE8 /40

_ a5PX5FGDC
F977DFFFEE

_ a5dP59ADA8
CBD8A89CAn

_ a5Sd59899G
BFC9777I 7T3BFC97DEA7n

_ a5dP59AG>A
CDA8C77I 7P

_ a5Sd5989>8
BFC9777I 7S3BFC977EF7n

c S5eQ5988G>
F977DFFFEC

_ a5Zd598BEC
BB8G9G8

c S5eQ5988GA
F977DFFFE8

_ a5Zd598BED
BB8GA7B

_ a5Zd59>D8>
BB97GCB3CD9D877I 7P

aOeVTWRSc 0cC91	8978C	aOeVTWRSc WWOcC91	8978C

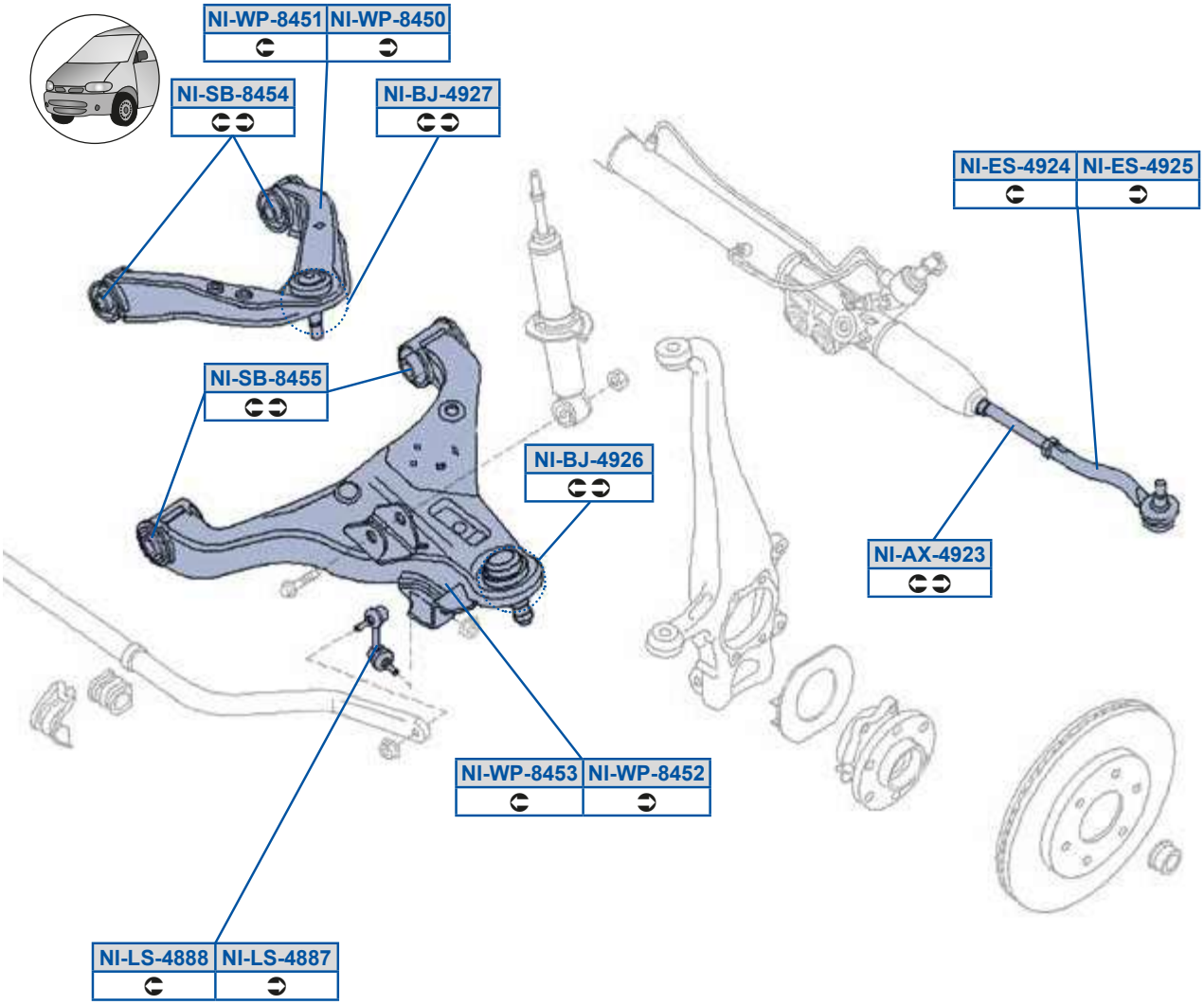

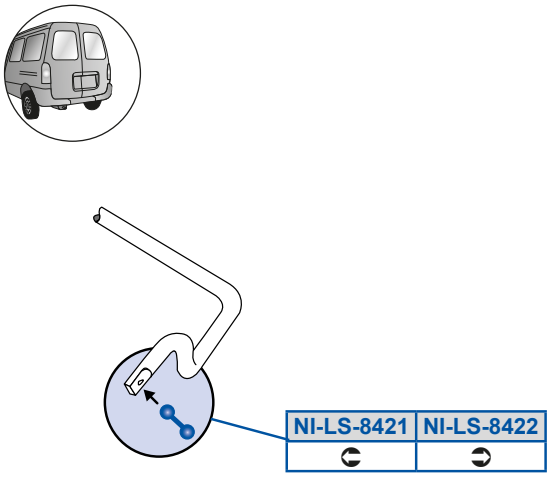

MOOG

] V5Oi 5BG>A
BFC98SO777

] V5Zd5FB>>
CD9D8SOC77

] V5PX5BG>D
CBC77SPA77 /40

] V5dP5FBCB
BCBC9BSPA70 /40

] V5PX5BG>E
CBC9BSPA77 /40

] V5dP5FBCC
CBC77SPA80 /40

] V5Sd5BG>B
BFC97SO78X3BFDB7SO78X

] V5h a5FBC8
CBC9BSPA70

] V5Sd5BG>C
BFDB7SO78X

] V5h a5FBC9
CBC9CSPA70

] V5Zd5BFFE
CBD8FSO787

] V5h a5FBC>
CBC77SPA773CBC77SPA80

] V5Zd5BFFF
CBDDFSO7873CBDDFSPA70

] V5h a5FBCA
CBC78SPA773CBC78SPA80

] V5Zd5FB>9
CD9D8SOC87

] WdO]

aWQY f a OR; ; 1	897GE 9; 798		

a z t Ë f IR>>n03>79GGF 5L1

] WdO]

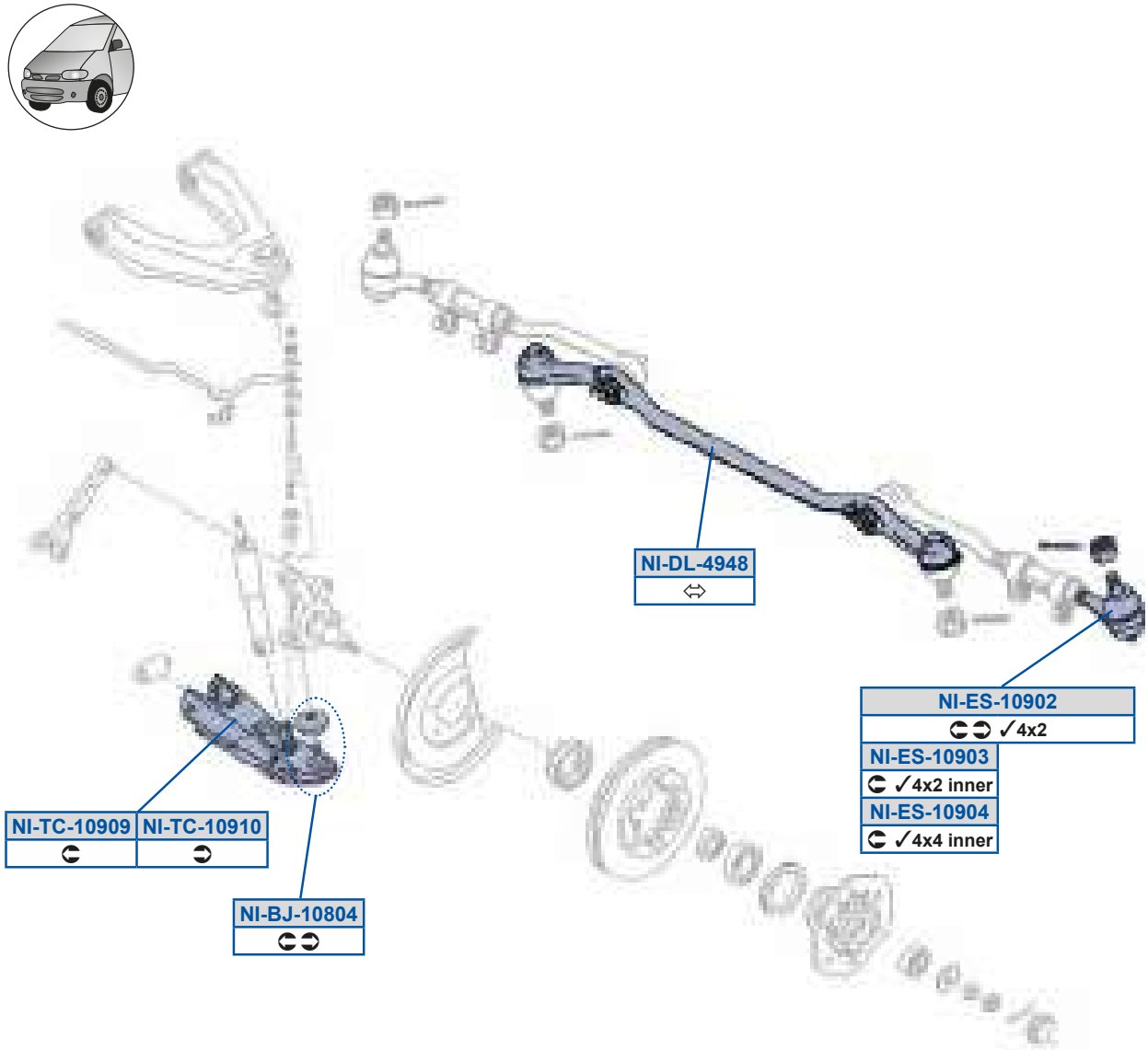

] V5PX598F8B
B78D79oD78

] V5RZ5BGBF
BFCD7AoC9C

] V5Sd598G8>
BFC979oB973BFC979oBFC

] V5Sd598G8A
BFC989oBFC3RFC98 YG8O

] V5Sd598G8B
BFCE7AoC9C3RFCE7 YG7O

] V5eQ598G8G
CBC7A9oBFC

] V5eQ598G98
CBC799oBFC

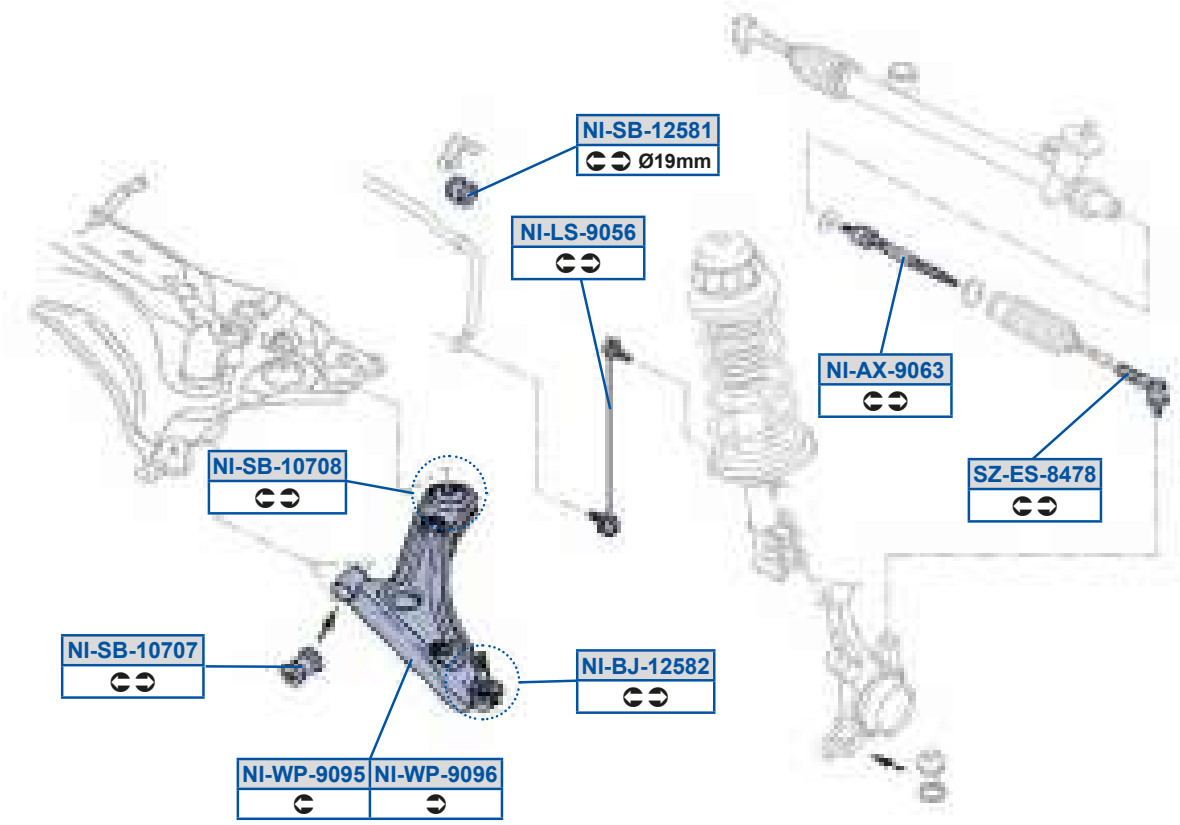
NI-SB-12581
Ø19mm
NI-LS-9056
NI-AX-9063
SZ-ES-8478
NI-SB-10708
NI-SB-10707
NI-BJ-12582
NI-WP-9095
NI-WP-9096

] V5Oi 5G8DA
BFC87BO77Q3BFFA7a DFY77

] V5PX59>CF>
CBC9GBO77O

] V5Zd5G8CD
B9B97a DFY773CBD8DBO77P

] V5dP598E8E
BCCA7a DFY773CBB9ABO77P

] V5dP598E8F
BC978a DFY77 /40

] V5dP59>CF9
B9BA8a DFY773CBD8Ba BO77P

] V5h a5G8GC
CBCA7BO77R

] V5h a5G8GD
CBC9GBO77R

dk5Sd5FBEF
BFC97BO77P3BFF87DAX77

acW OdeOc P Ol FA1	8G78;	acW OdeOc P Ol FA1	8A789

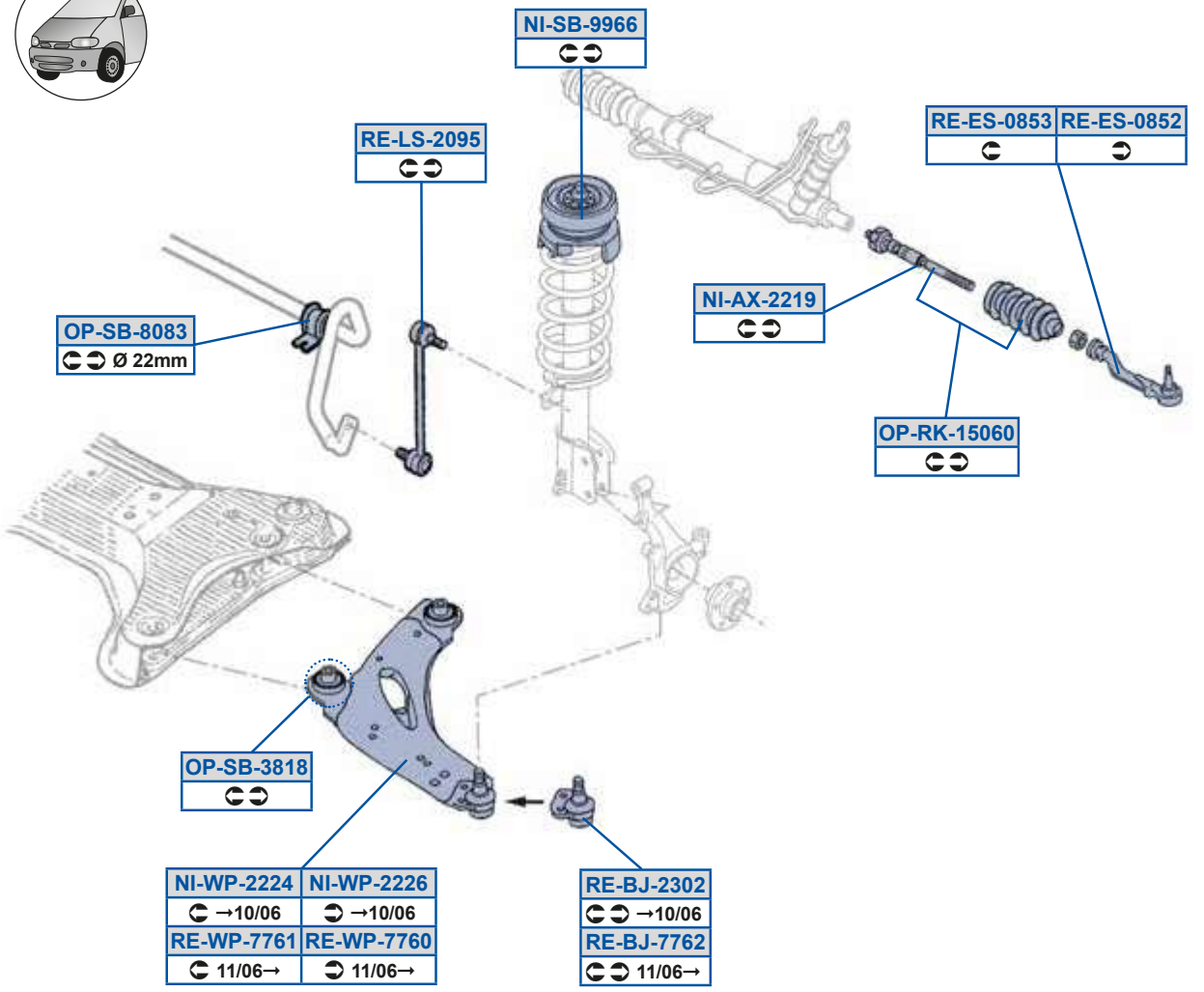

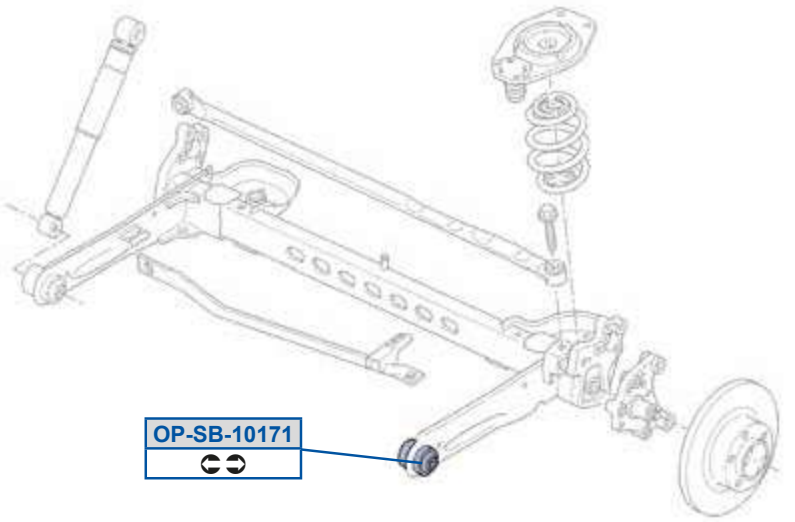

] V6Oi 5>>9G
BFC9777I 0a 3EE78BEAAAA

c S5PX5>A8>
CBC7977I 703CBC7977I 7P

] V6dP5GGDD
CBA9777I 003EE7897EBG8

c S5PX5EED>
B78D777I 70

] V6h a5>>>B
CBC7A77I 703CBC7A77I 7P

c S5Sd58FC>
BFC9777I 0Z

] V6h a5>>>D
CBC7977I 703CBC7977I 7P

c S5Sd58FCA
BFC9777I 0Y

_ a5cY59C8D8
BFC9777I 0a 3EE78BEAAAA

c S5Zd5>8GC
CBD8D777I 703CBD8D777I 0Q

_ a5dP5989E9
CCBDD477I 00

c S5h a5EED8
CBC7977I 703CBC7977I 7Q

_ a5dP5AF9F
F9777BGD9B

c S5h a5EED9
CBC7A77I 703CBC7A77I 7P

_ a5dP5F8FA
BB 7F G7C

] WdO]

acW[ScO 0a991	8D7GD 9; 789	acW[ScO P xt 0h a991	8D7GD 9; 789
acW[ScO Vt vÉut v 0a991	8D7GD 8E78;		

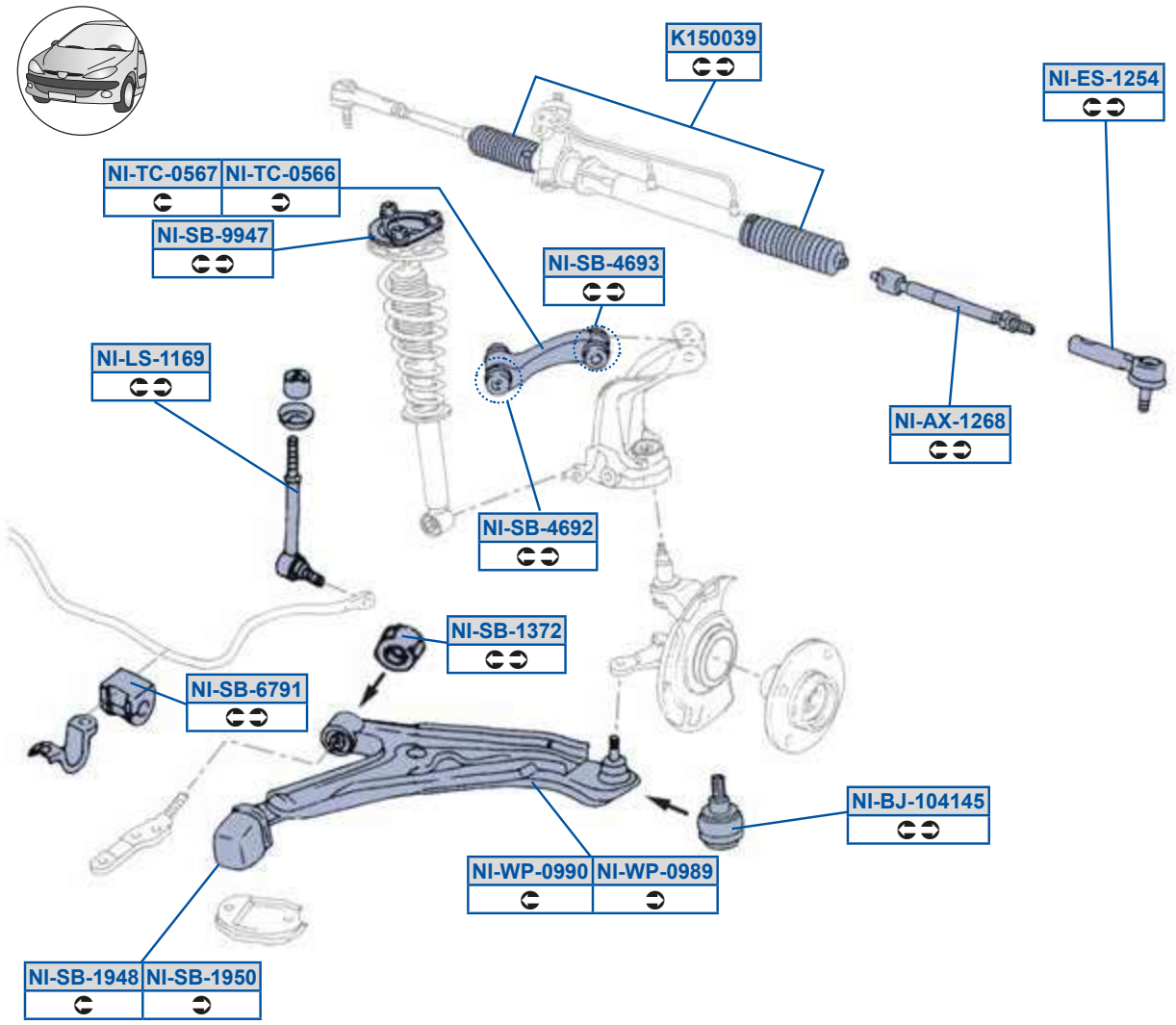

Sedan (P11)

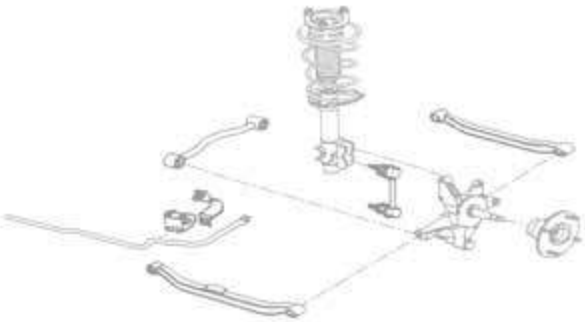

Estate (WP11)

Y9C88AG
9E8D783BF97A G79C

] W5dP5BDG>
CBCB8G7X79

] W5OI 59>DF
BFC98C7B773BFC98C7 77

] W5dP5BDGA
CBCBCG7X77

] W5PX598B9BC
B78D7C70773B78D7C7X9C

] W5dP5DEG9
CD9BAGAX77

] W5Sd59>CB
BFC977a 79C3BFC97E9 9C

] W5dP5GGBE
CD98ED8Z87

] W5Zd599DG
CBD8F9T7873CBD8FC7X88

] W5eQ58CDD
CBC9B9T7873CBC9BFDX78

] W5dP59AE>
CBC779TG773CBC789TC77

] W5eQ58CDE
CBC9C9T7873CBC9CFDX78

] W5dP59GBF
CBC9BFDX87 /40

] W5h a58GFG
CBC779TC77

] W5dP59GC8
CBC9BFDX87 /40

] W5h a58GG8
CBC789TC77

] WdO]

acW Sc0 0a9; 1	8978;	acW Sc0 S t x 0h a9; 1	8978;
acW Sc0 Vt vÉut v 0a9; 1	8978;		

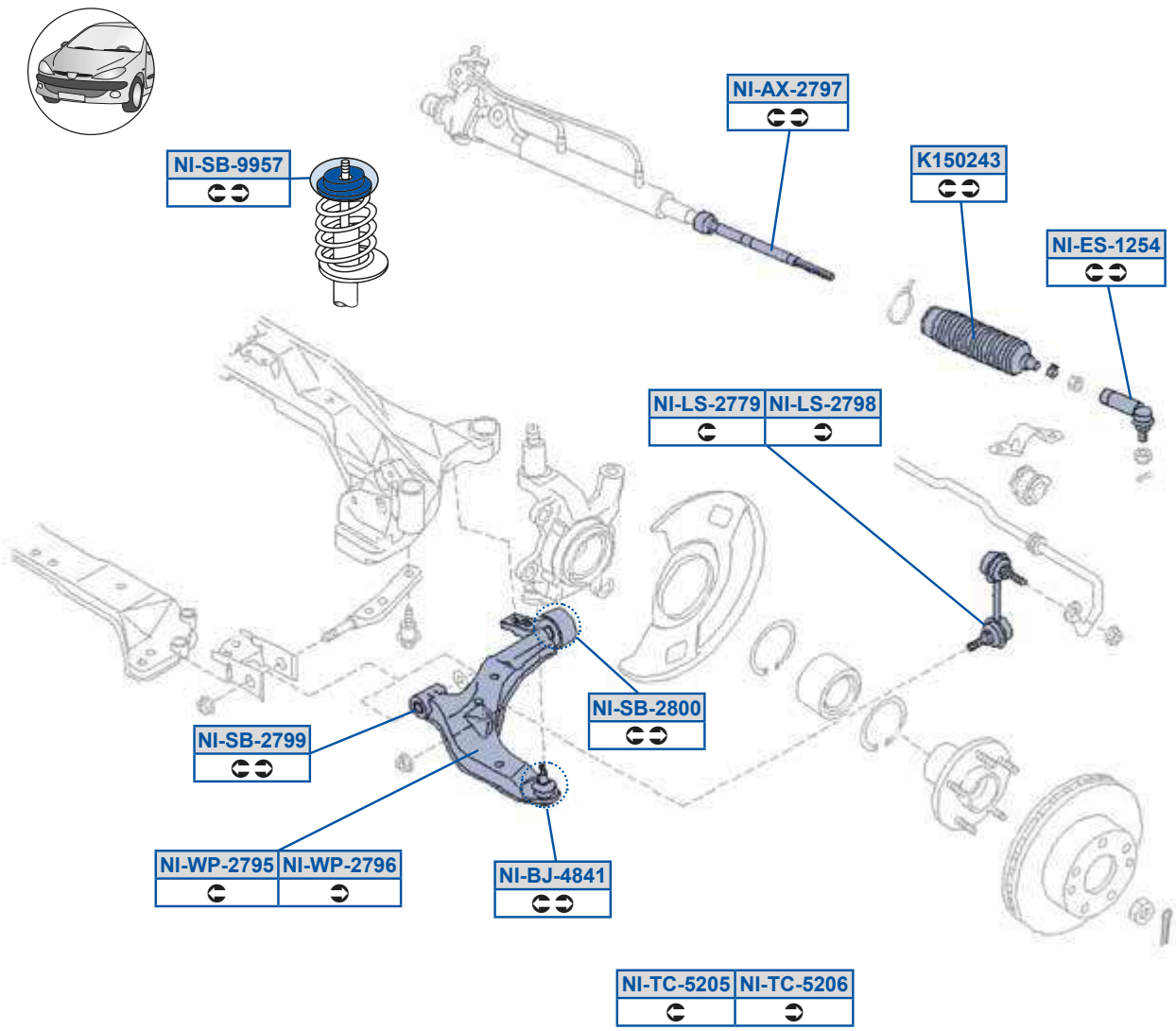

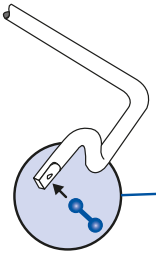

NI-LS-5735
→10/02
NI-LS-10160
10/02→

MOOG

Y9C8>BA
BF97A0 D773BF97APa B77

] W5dP5>EGG
CBC780 D7C /40

] W5OI 5>EGE
BG778P09873BG778P0987oY

] W5dP5>F88
CBC780 D7C /40

] W5PX5BFB9
CBC770 D7D /40

] W5dP5GGCE
CBA970uE78

] W5Sd59>CB
BFC977a 79C3BFC97E9 9C

] W5eQ5C>8C
CBC9C0 D773CBC9C0 D78

] W5ZD5989D8
CD9D80 D873CD9D80 D88

] W5eQ5C>8D
CBC9B0 D773CBC9B0 D78

] W5ZD5>EEG
CBDDF0u7773CBDDFP0A70

] W5h a5>EGC
CBB780 D703CBC780 D77

] W5ZD5>EGF
CBD8F0u7773CBD8FP0A70

] W5h a5>EGD
CBC770 D773CBC770 D7C

] W5ZD5CEAC
CD9D87S777

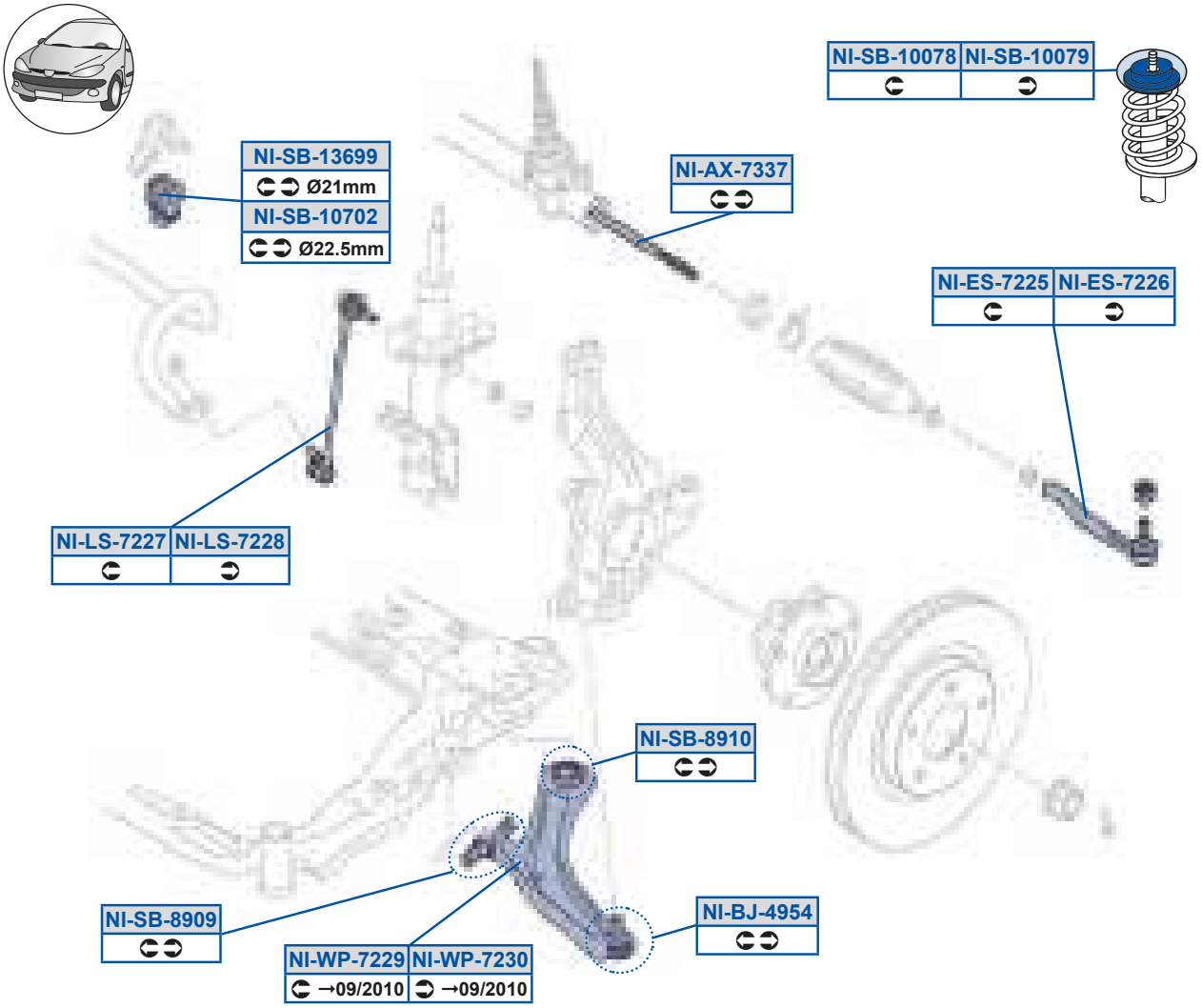
NI-SB-10078
NI-SB-10079
NI-SB-13699
Ø21mm
NI-SB-10702
Ø22.5mm
NI-AX-7337
NI-ES-7225
NI-ES-7226
NI-LS-7227
NI-LS-7228
NI-SB-8910
NI-SB-8909
NI-WP-7229
→09/2010
NI-WP-7230
→09/2010
NI-BJ-4954

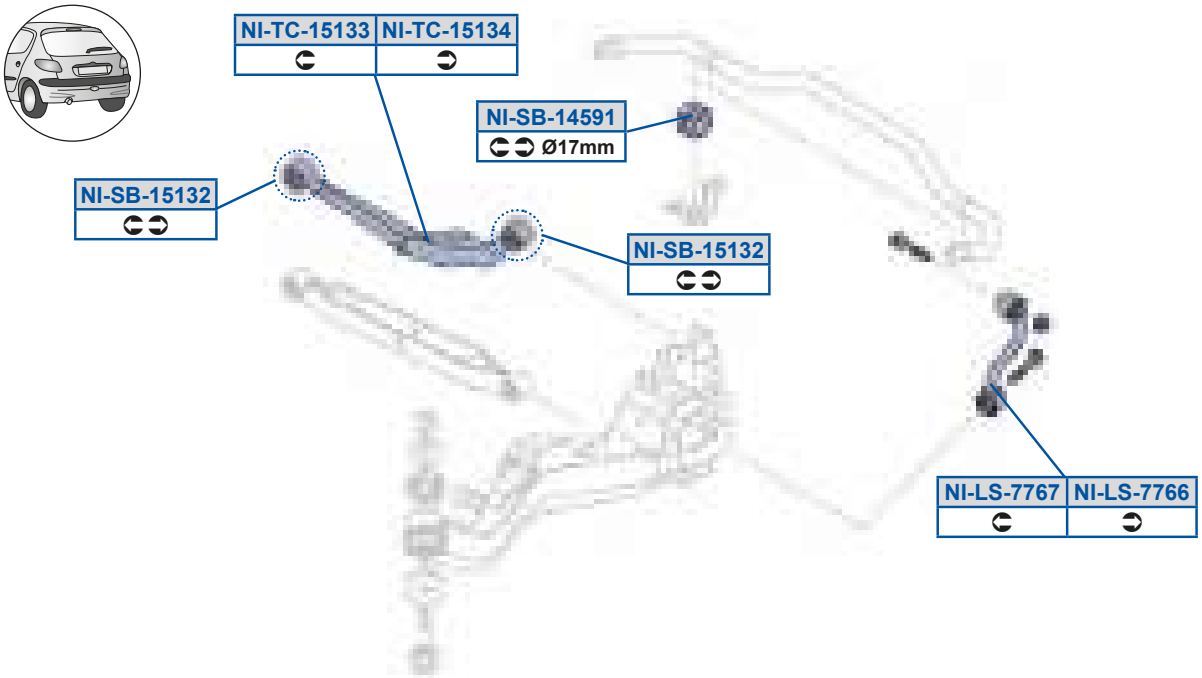
NI-TC-15133
NI-TC-15134
NI-SB-14591
Ø17mm
NI-SB-15132
NI-SB-15132
NI-LS-7767
NI-LS-7766

] V5Oi 5EAAE
BF778XRG77 /403RFC98XR77P

] V5dP5988EF
CBA98XU78P

] V5eQ59C9AA
CC898XR77P

] V5PX5BGCB
CBC77QQB70 /40

] V5dP5988EG
CBA97XU78P

] V5eQ59C9AB
CC897XR77P

] V5Sd5E>>C
BFDBEXR7803RFDB7XU770

] V5dP598E8>
CBD8AXR7A0

] V5h a5E>>G
CBC78PP7703CBC78PnA70

] V5Sd5E>>D
BFC9EXR7803RFS97XU770

] V5dP59ADGG
CBD8AXR7B0

] V5h a5E>A8
CBC77PP7703CBC77PnA70

] V5Zd5E>>E
CBDDF800703CBDDF8007S

] V5dP59BCG9
CBD8AXR8E0

] V5Zd5E>>F
CBD8F800703CBD8F8007S

] V5dP59C9A>
CC897XR77P /40

] V5Zd5EEDD
CCD8FXR7703CCD8FX 77P

] V5dP5FG8G
CBC77XR777 /40

] V5Zd5EEDE
CCD8GXR7703CCD8GX 77P

] V5dP5FG98
CBC77XR777 /40

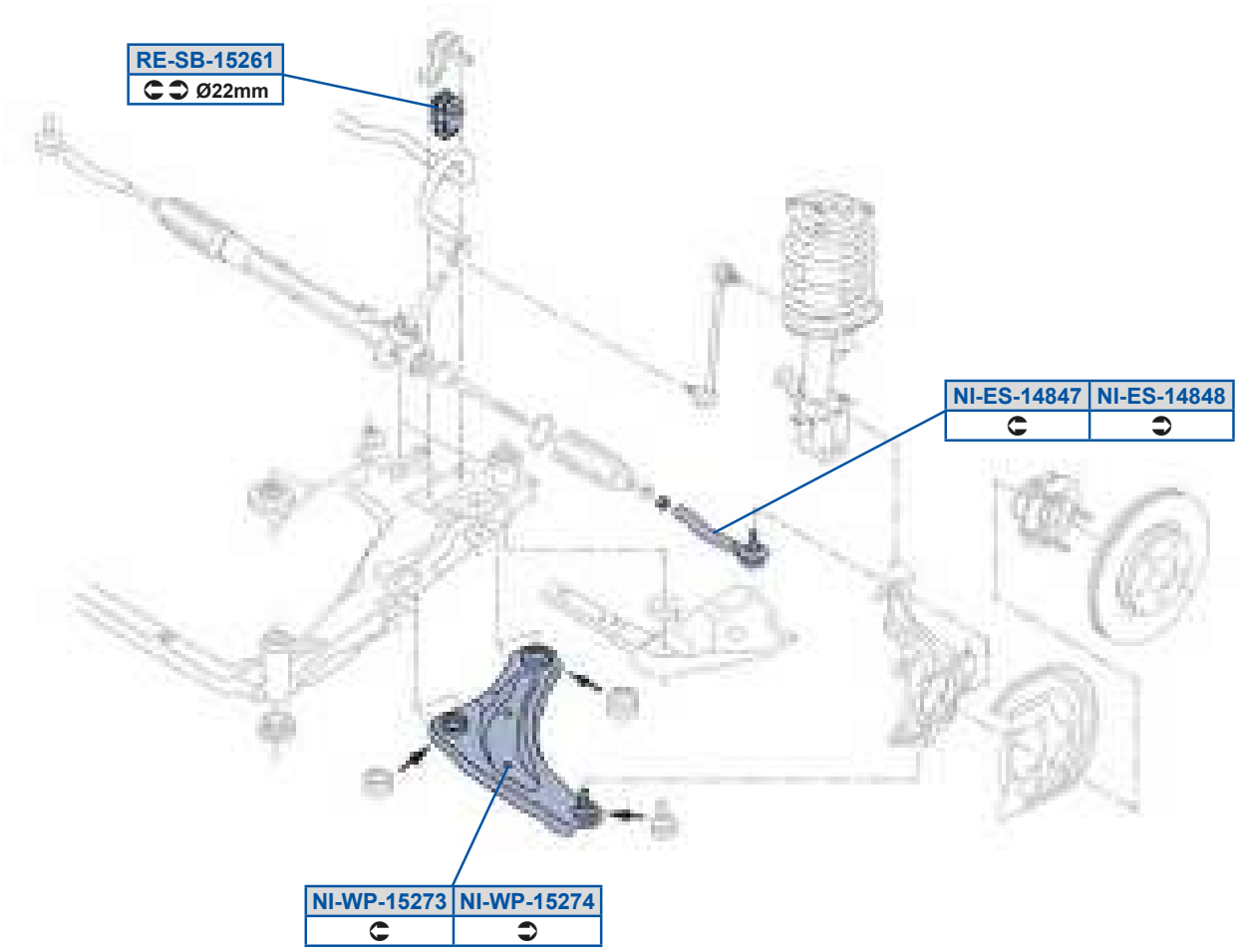
RE-SB-15261
Ø22mm
NI-ES-14847
NI-ES-14848
NI-WP-15273
NI-WP-15274

4x2

4x4

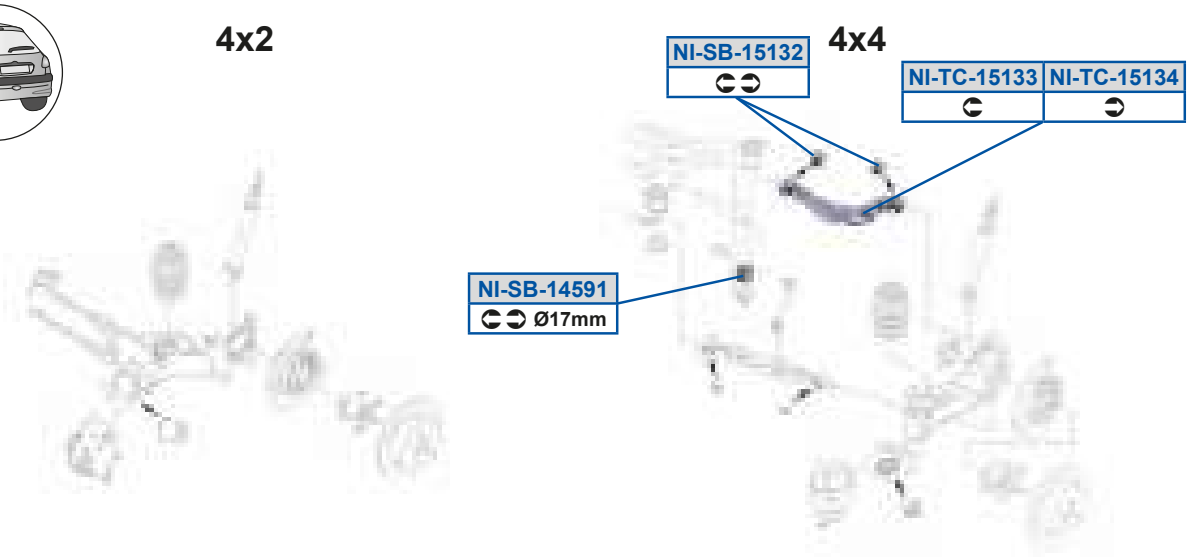
NI-SB-15132
NI-TC-15133
NI-TC-15134
NI-SB-14591
Ø17mm

] W5Sd59BFBE
RFDB7BS070

] W5Sd59BFBF
RFC97BS070

] W5dP59BCG9
CBD8AXR8E0

] W5dP59C9A>
CC897XR77P /40

] W5eQ59C9AA
CC898XR77P

] W5eQ59C9AB
CC897XR77P

] W5h a59C>EA
CBC78BS07P

] W5h a59C>EB
CBC77BS07P

c S5dP59C>D9
CBD8ABS07P

] WdO]

eScc0] _ W0h R; 91	8E7FD 8; 7GD	eScc0] _ W0c; 81	987G; 8G78E
eScc0] _ gt 0c; 81	8D7GF 8G78E		

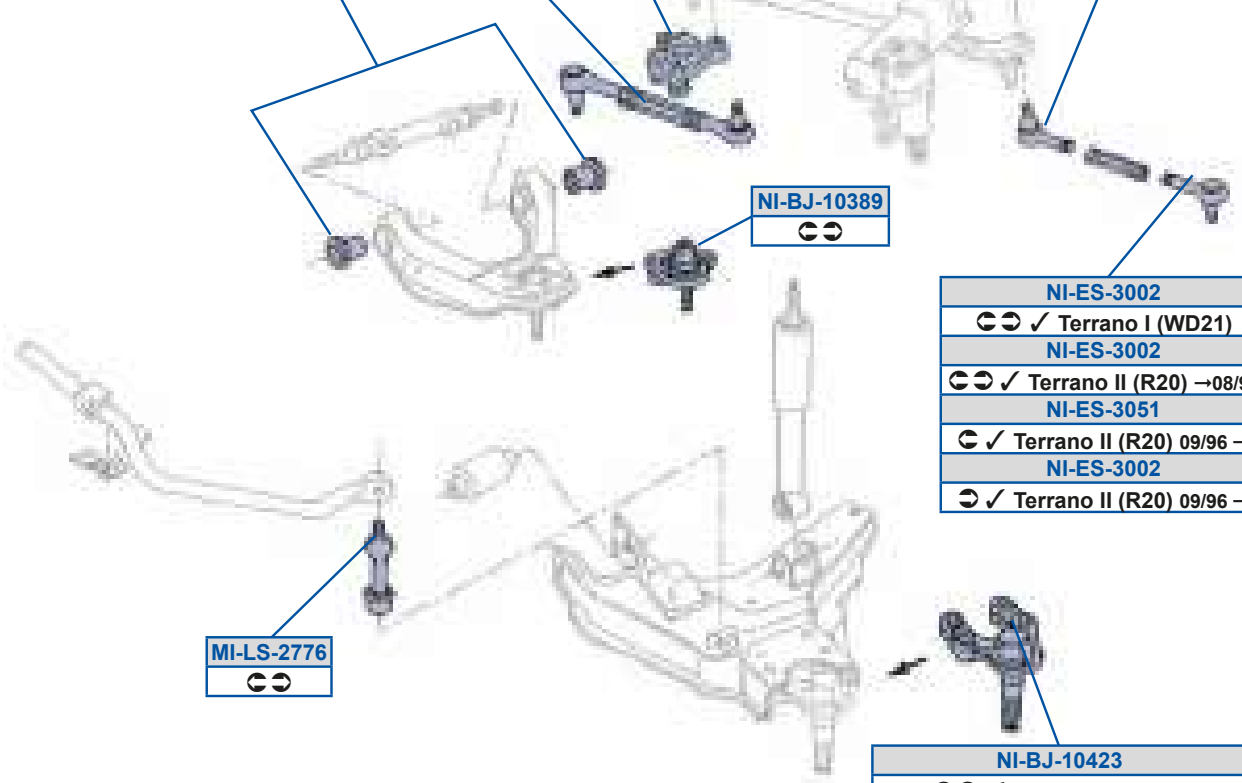

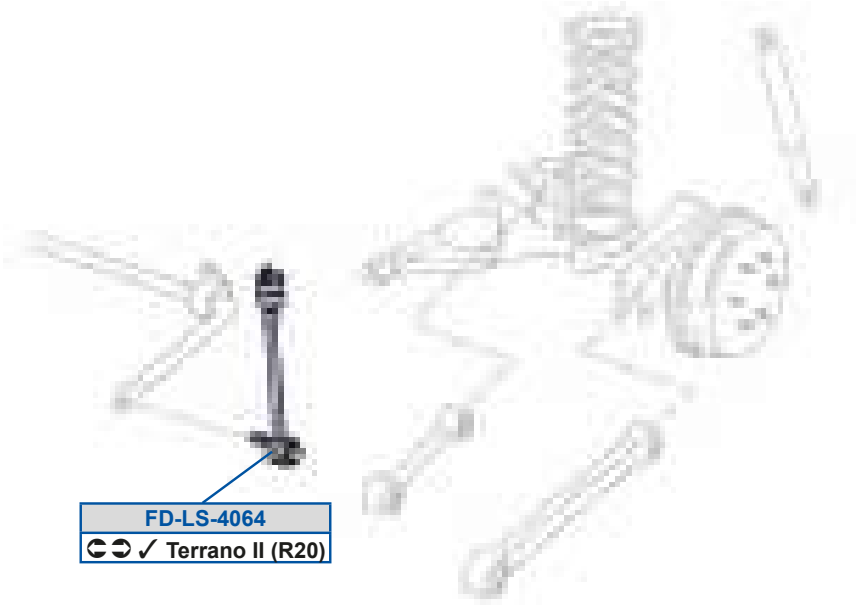

TR5Zd5B8DB
8GCBF983CD9D77T778

[V5Zd5>EED
CBD8F7T7773CBD8Fa PB7O

] V5PX598AFG
B788778U773B788778U9C

] V5PX598GA8
B78D7ET777

] V5Rd5>AFD
BFC87A8U9C3BFC87ET777

] V5Sd5A88>
BFC97A8U9C3BFC97ET777

] V5Sd5A8C9
BFC97ET7783BFC98A8U9C

] V5dP5A>9>
CBC7DPGC77

eWRO Vt vÉut v 0Q99i 1	8G78E 9; 799	eWRO dt 0dQ99i 1	8F78D 9; 79;

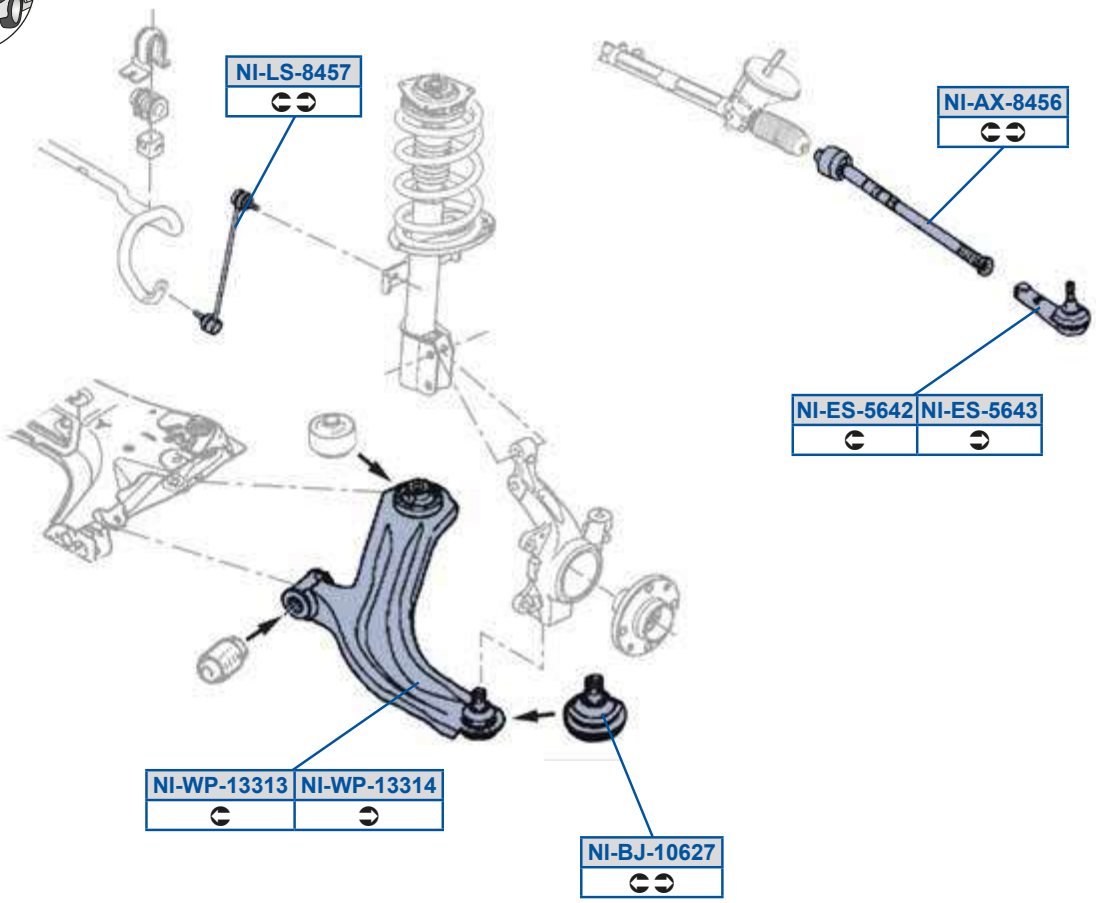

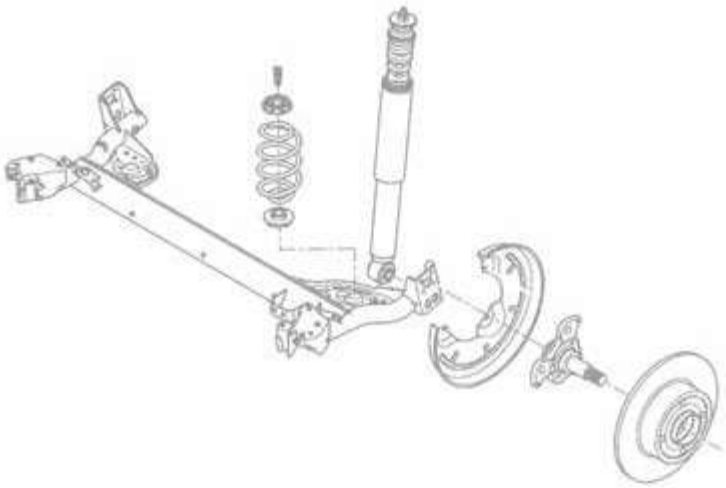

] V5Oi 5FBCD
BFC98Au79C

] V5PX598D>E
CBC778YO7P /40

] V5Sd5CDB>
BFD9E8uD8O3BFDBE8uD8O

] V5Sd5CDBA
BFC9E8uD8O3BFDBE8uD8O

] V5Zd5FBCE
CBD8FGu77O

] V5h a59AA9A
CBC78SZ777

] V5h a59AA9B
CBC77SZ777

g0] SeeS Q0cU_ P 0VQ ; A1	8G7GB 8C78;	g0] SeeS Q0cU_ P 0VQ ; A1	8G7GB 8C789

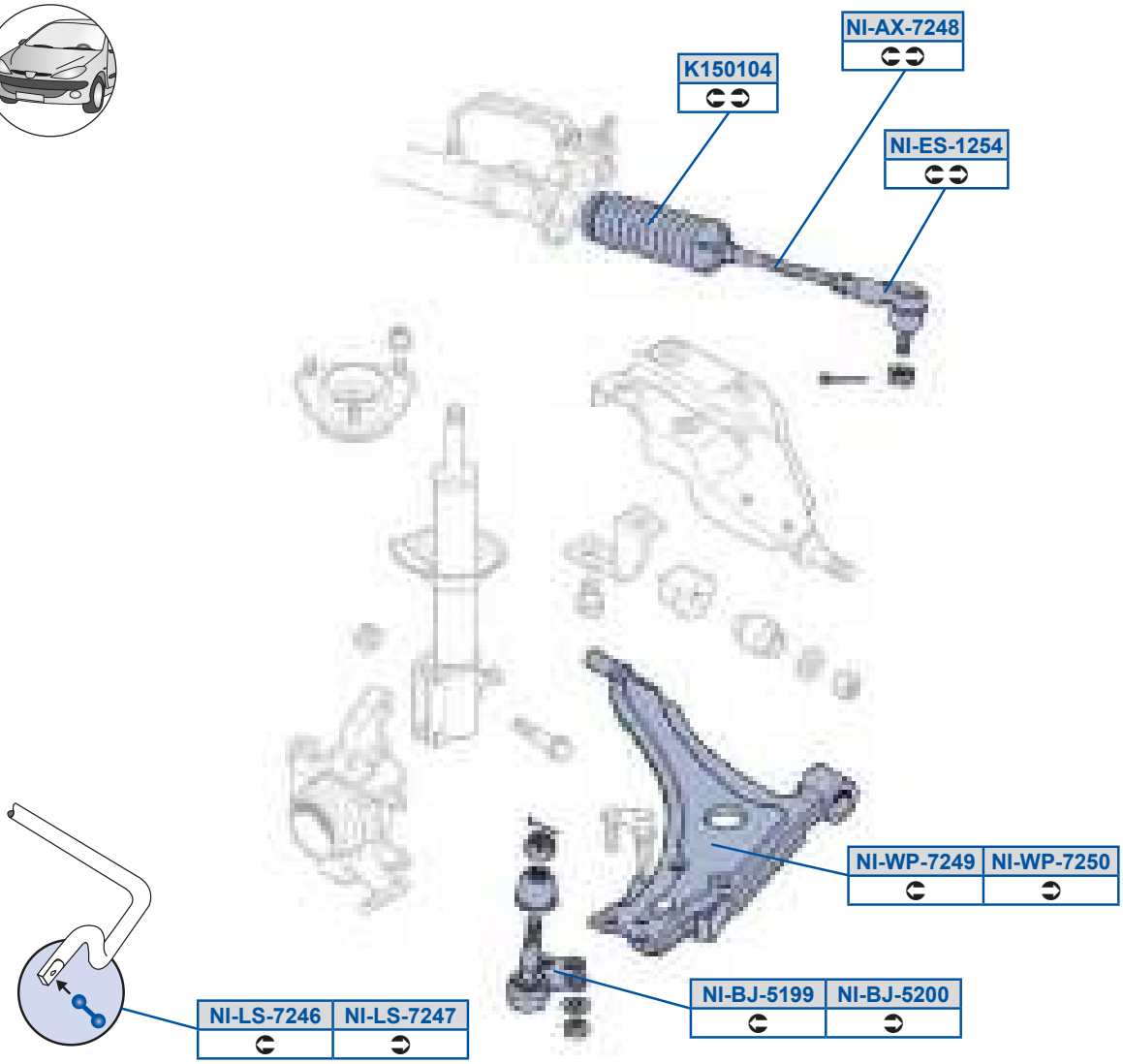

Y9C898B
BF97A7S79C

] V5Oi 5E>BF
BFC98C 7FC

] V5PX5C9GG
B78D8GQC77

] V5PX5C>88
B78D7GQC77

] V5Sd59>CB
BFC977a 79C3BFC97E9 9C

] V5Zd5E>BD
CBD8FGQ7773CBDDFGQ777

] V5Zd5E>BE
CBD8FGQ779

] V5h a5E>BG
CBC78EQAC73CBC78GQCC7

] V5h a5E>C8
CBC77EQAC73CBC77GQCC7

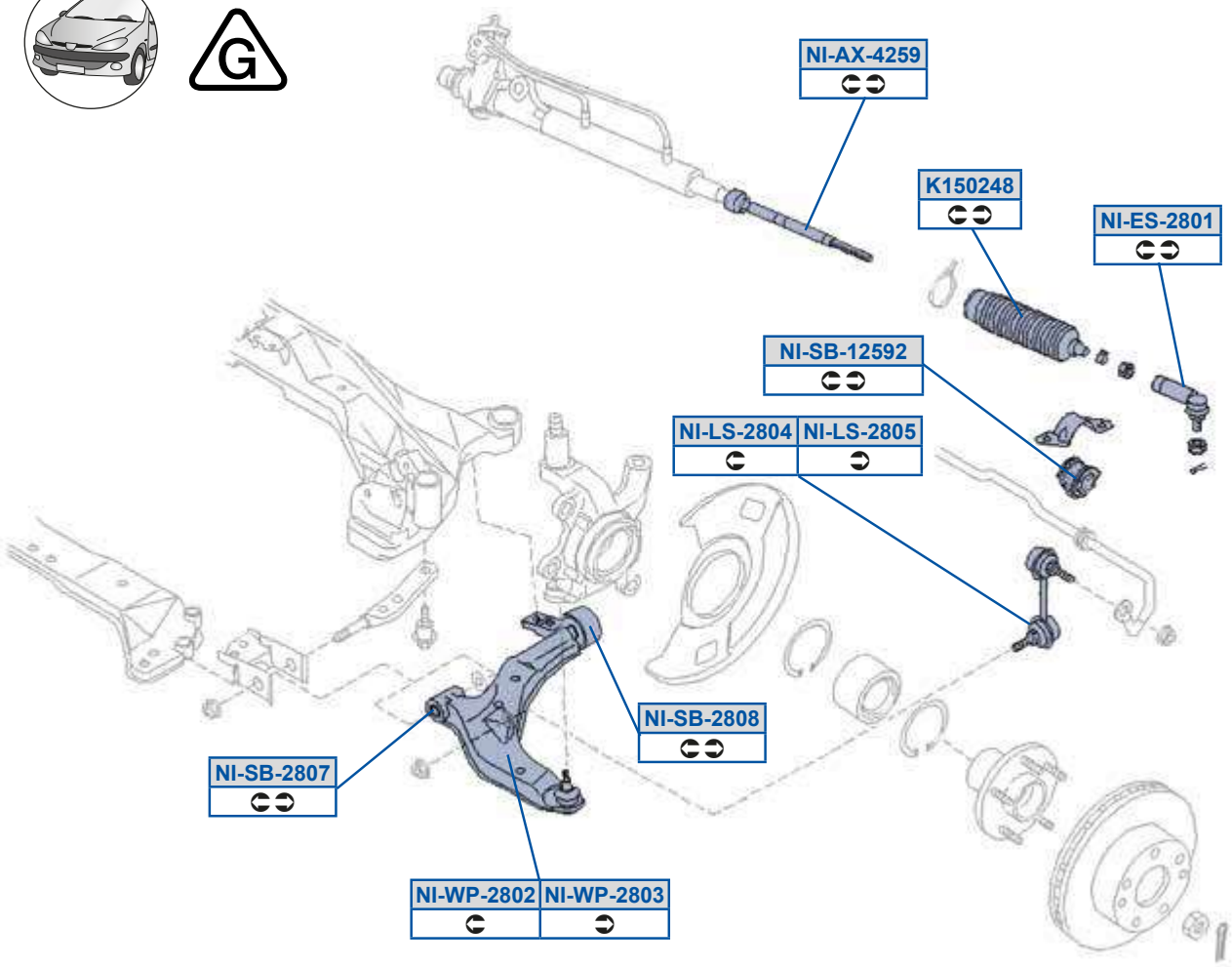

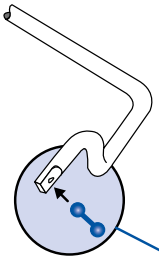

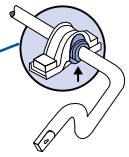

NI-LS-4067

NI-SB-12591 Ø18mm

NI-TC-14993 | NI-TC-14994

Y9C8>BF
BF97ABa C9C3BF97ABa C9D

] W5dP5>F8E
B88EB /40 3B88EC /40

] W5OI 5B>CG
BFC98FVA773BFC98FVA9C

] W5dP5>F8F
CBC77FVA87 /40

] W5Sd5>F89
BFC977i E9C3BFC977 79C

] W5eQ59BGGA
CC897FVC7C

] W5Zd5>F8B
CBDDFFVA77

] W5eQ59BGGB
CC897FVC77

] W5Zd5>F8C
CBD8FFVA77

] W5h a5>F8>
CBC78FVA87

] W5Zd5B8DE
CD9D8SI 777

] W5h a5>F8A
CBC77FVA87

] W5dP59>CG9
CBD8AFVC8F

] W5dP59>CG>
CBD8AFVA8F

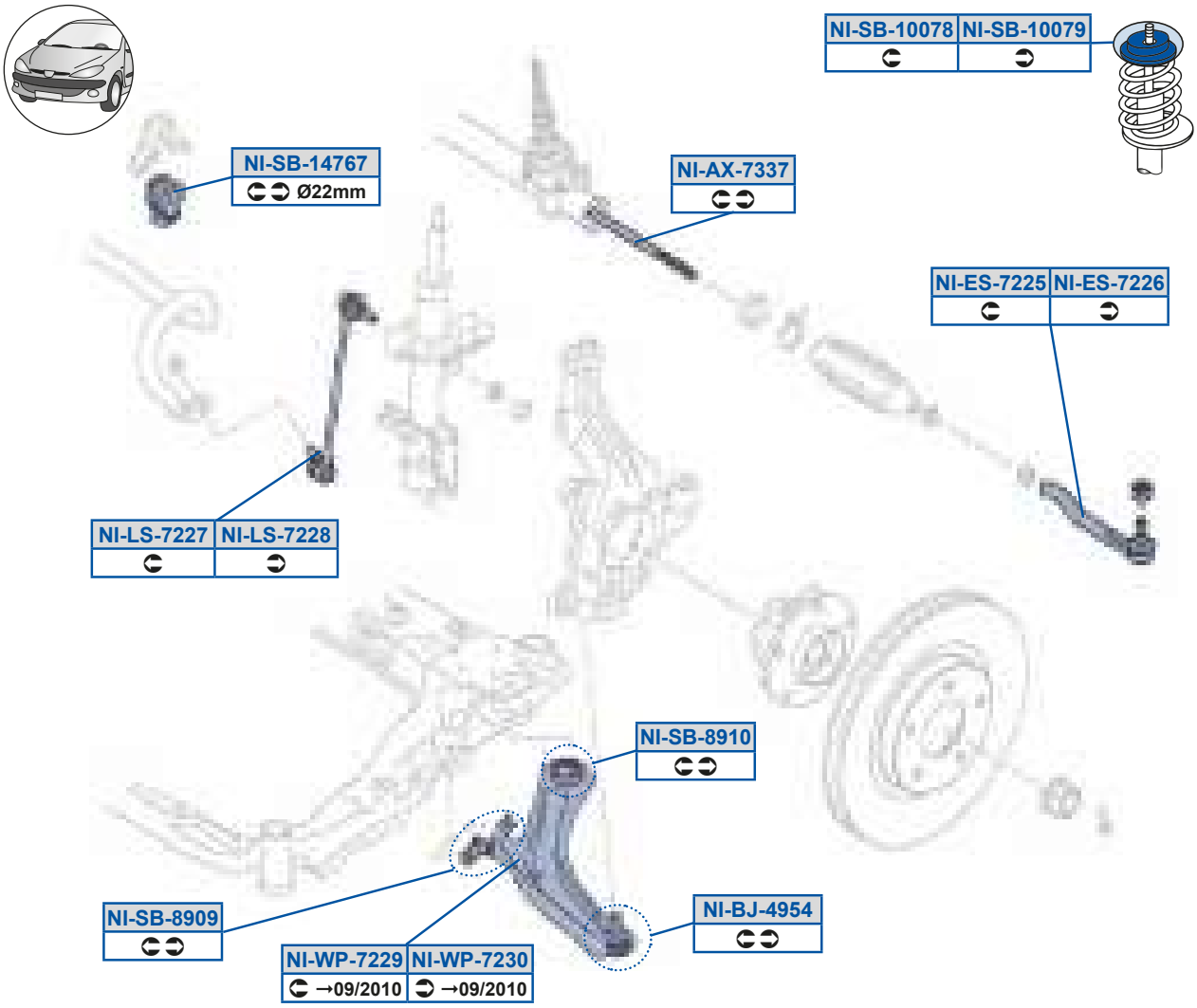
NI-SB-10078
NI-SB-10079
NI-SB-14767
Ø22mm
NI-AX-7337
NI-ES-7225
NI-ES-7226
NI-LS-7227
NI-LS-7228
NI-SB-8910
NI-SB-8909
NI-BJ-4954
NI-WP-7229
→09/2010
NI-WP-7230
→09/2010

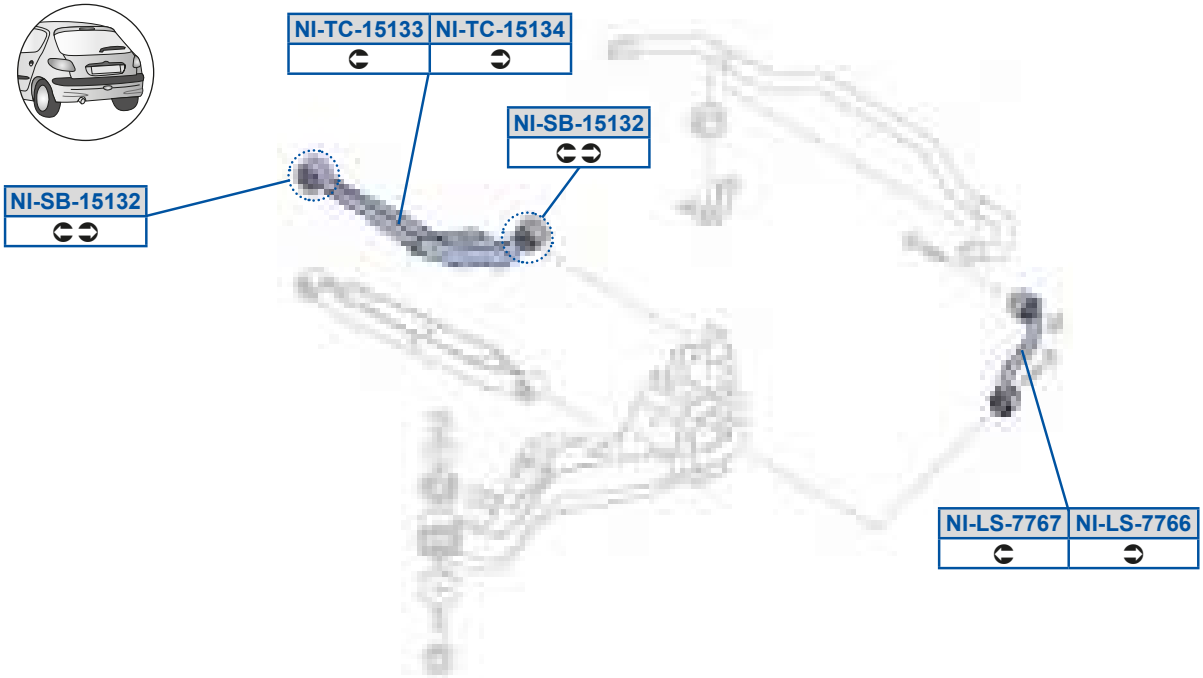
NI-TC-15133
NI-TC-15134
NI-SB-15132
NI-SB-15132
NI-LS-7767
NI-LS-7766

] V5OiE5EAAE
BF778XRG77 /403RFC98XR77P

] V5dP5988EF
CBA98XU78P

] V5h a5E>>G
CBC78PP7703CBC78PnA70

] V5PX5BGCB
CBC77QQB70 /40

] V5dP5988EG
CBA97XU78P

] V5h a5E>A8
CBC77PP7703CBC77PnA70

] V5Sd5E>>C
BFDBEXR7803RFDB7XU770

] V5dP59BEDE
CBD8AAuP703CBD8AXR790

] V5Sd5E>>D
BFC9EXR7803RFS97XU770

] V5dP59C9A>
CC897XR77P /40

] V5Zd5E>>E
CBDDF800703CBDDF8007S

] V5dP5FG8G
CBC77XR777 /40

] V5Zd5E>>F
CBD8F800703CBD8F8007S

] V5dP5FG98
CBC77XR777 /40

] V5Zd5EEDD
CCD8FXR7703CCD8FX 77P

] V5eQ59C9AA
CC898XR77P

] V5Zd5EEDE
CCD8GXR7703CCD8GX 77P

] V5eQ59C9AB
CC897XR77P

ORO[Q[9A1	9879;		

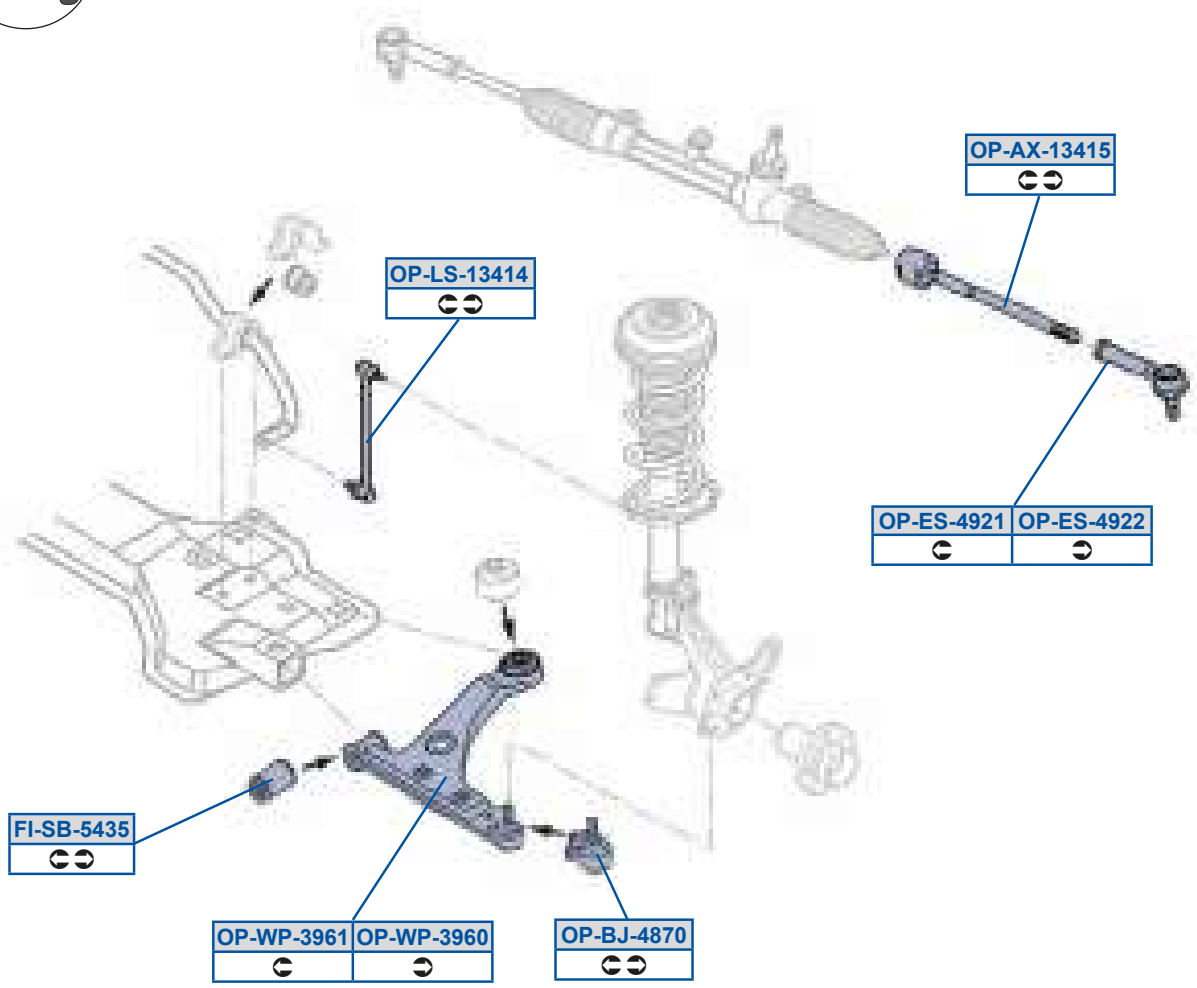

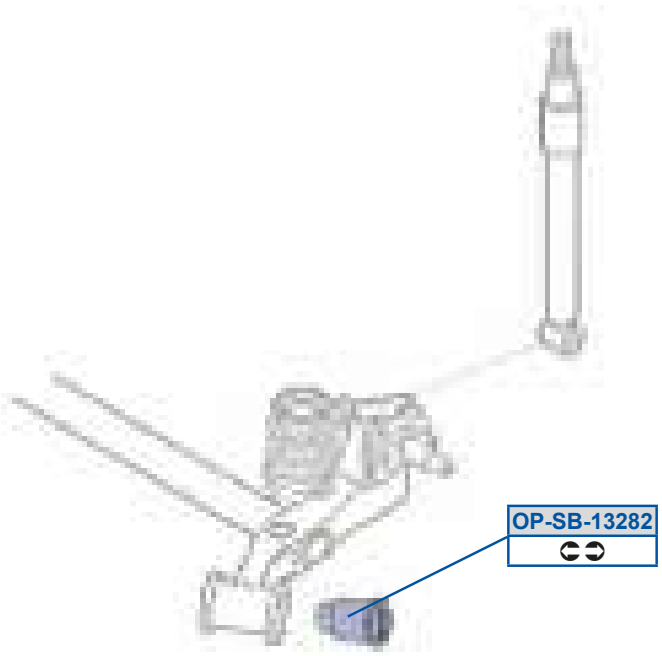

TV6dP5CBAC
8A9D7DDD3AC9AF7

_a5Oi59AB9C
8D7G9883GCC8BG8B

_a5PX5BFE8
AC97DE3AC97FE

_a5Sd5BG>9
8D7ACBB38D7GBCE

_a5Sd5BG>>
8D7ACBC38D7GBCF

_a5Zd59AB9B
8AAG8C893AC79AA

_a5dP59A>F>
8A9C8CG73B79CAF

_a5ha5AGD8
AC9CBA3CAC97AF

_a5ha5AGD9
AC9CB93CAC97AG

OUVZO 0010V881	8G788 9; 78E		

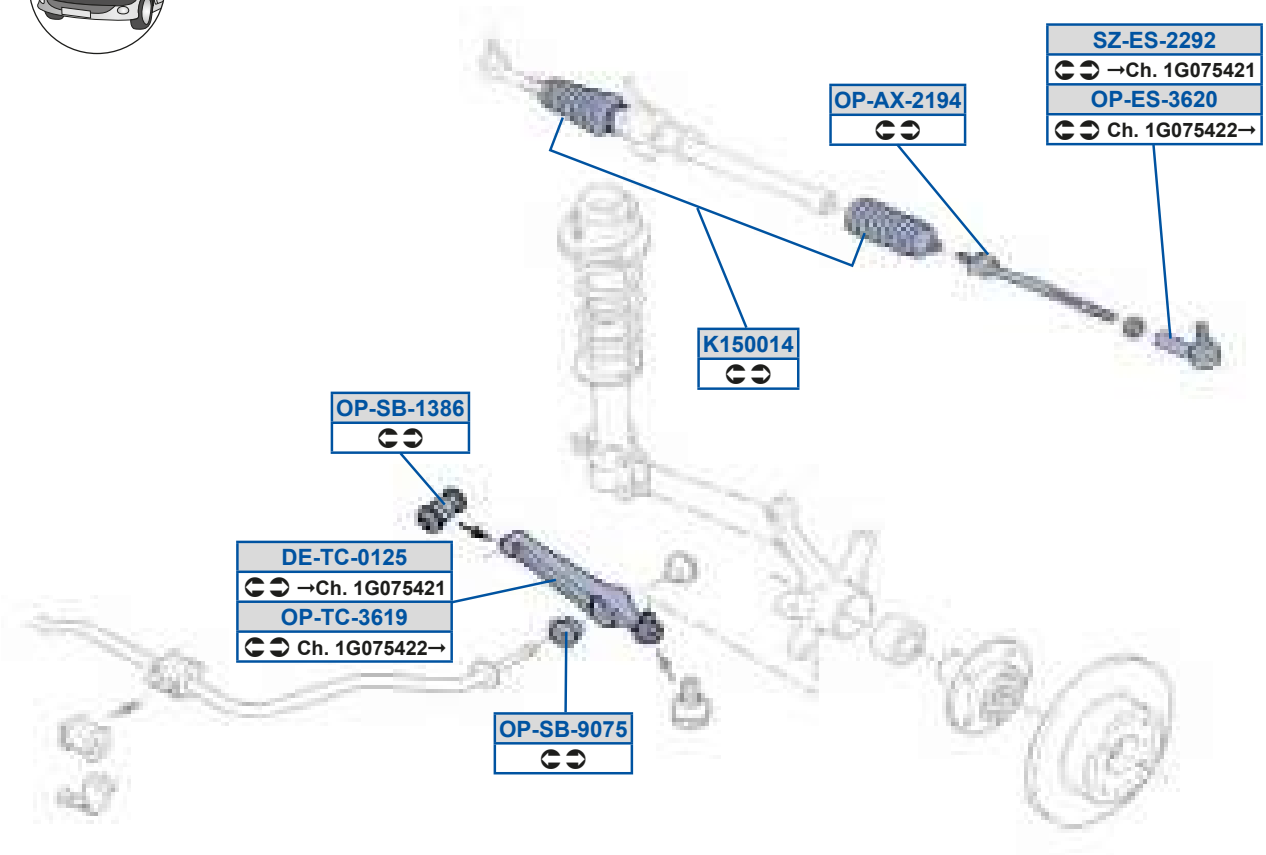

RS5eQ589>C
BE7C8E9

Y9C889B
7G79F9D39D78779G

_ a5Oi 5>9GB
BE78EBC

_ a5Sd5AD>8
BE7CE8D3BE7G8GC

_ a5dP59AFD
BE7AFD73BE7DDDB

_ a5dP5G8EC
B9BC8a EDU77

_ a5eQ5AD9G
BE7CEB93BE7DDDC

dk5Sd5>>G>
BE78EBB3BE7CDCC

OUVZO 0P10V8F1	8B78F		

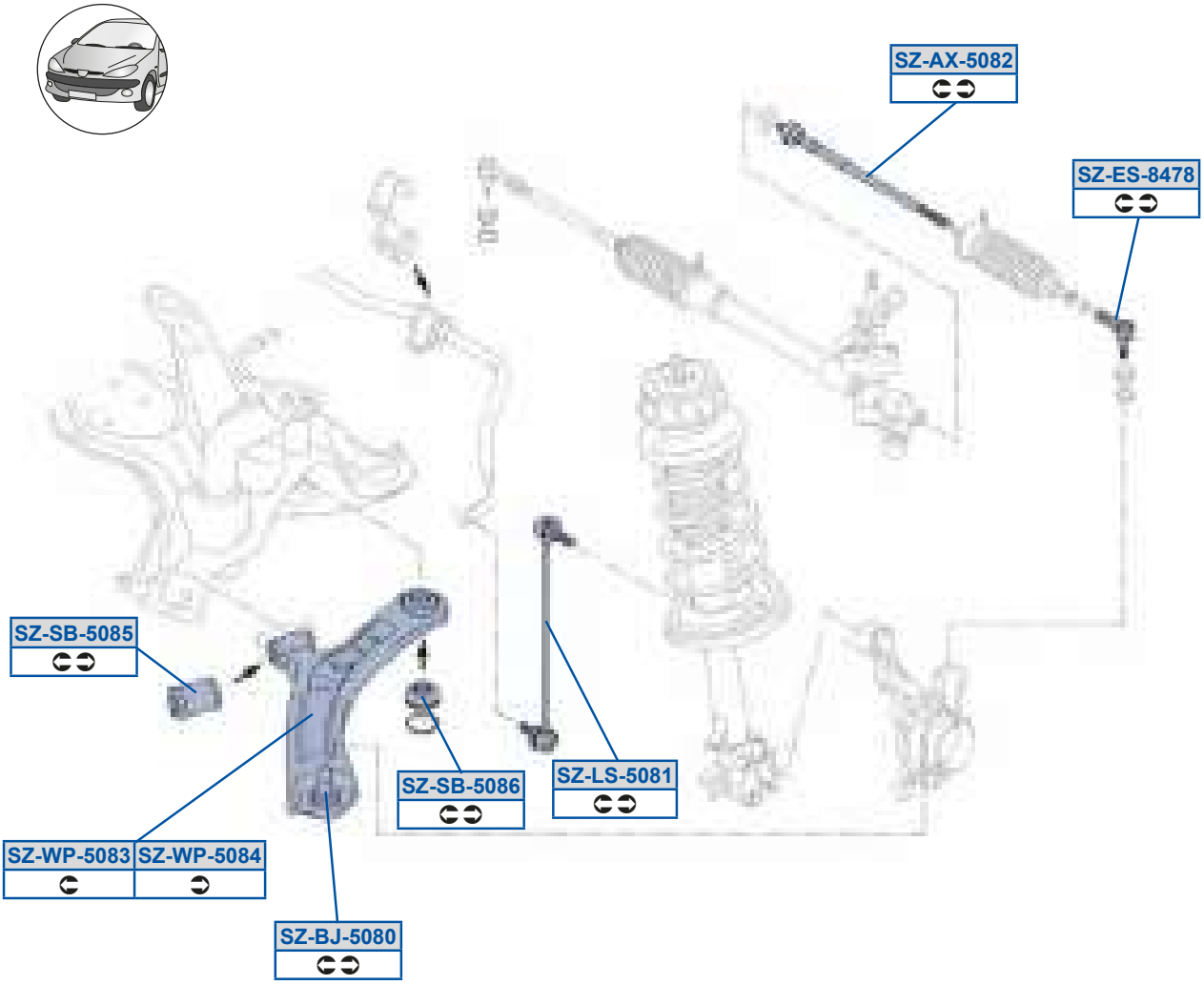

dk5Oi 5C8F>
BE7G8D83BFFA7DAX77

dk5PX5C8F8
BC979D9X77 /40

dk5Sd5FBEF
BE7G8GC3GA8GB7AC

dk5Zd5C8F9
BE7GE793GA8GC7GA

dk5dP5C8FC
BCCA7D9X773BE7FA79

dk5dP5C8FD
BC979D9X77 /40

dk5h a5C8FA
BC979D9X77

dk5h a5C8FB
BC978D9X77

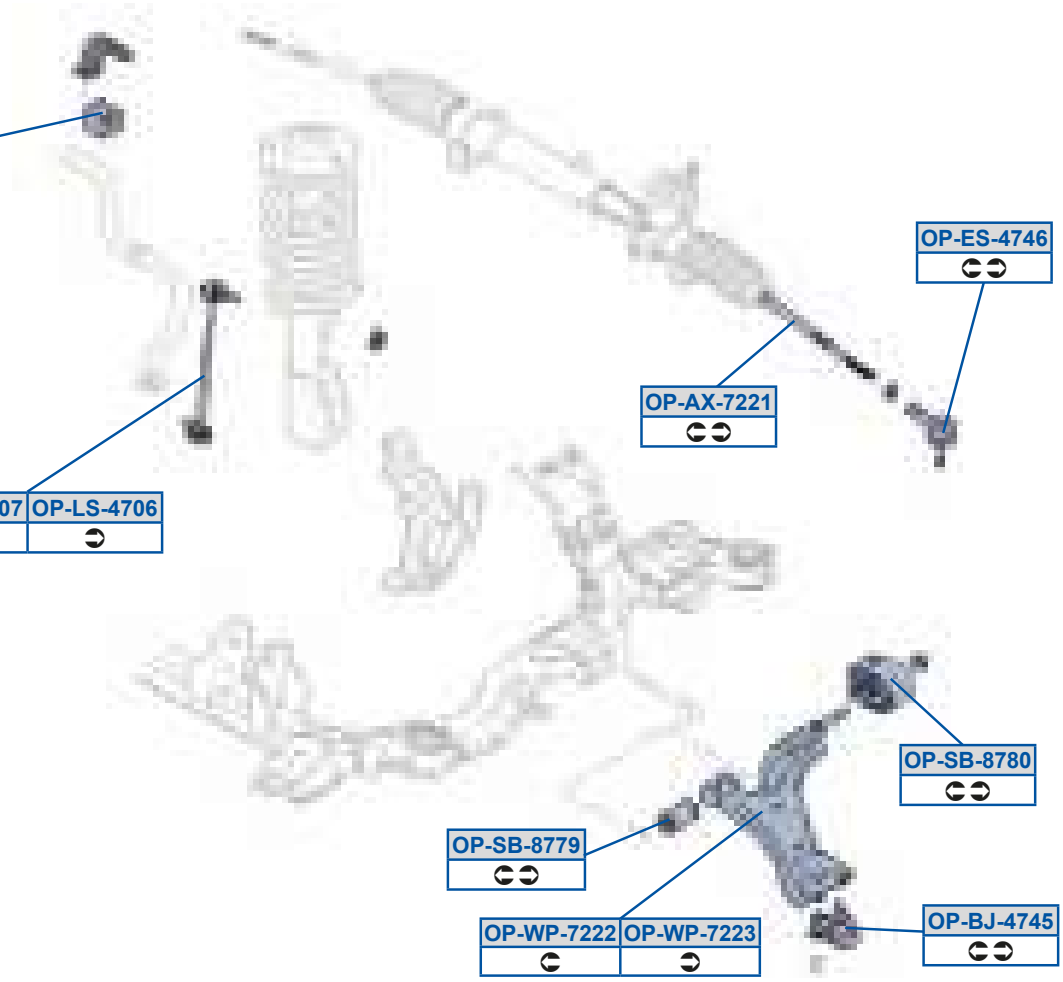
OP-SB-10445
Ø26mm
OP-ES-4746
OP-AX-7221
OP-LS-4707
OP-LS-4706
OP-SB-8780
OP-SB-8779
OP-WP-7222
OP-WP-7223
OP-BJ-4745

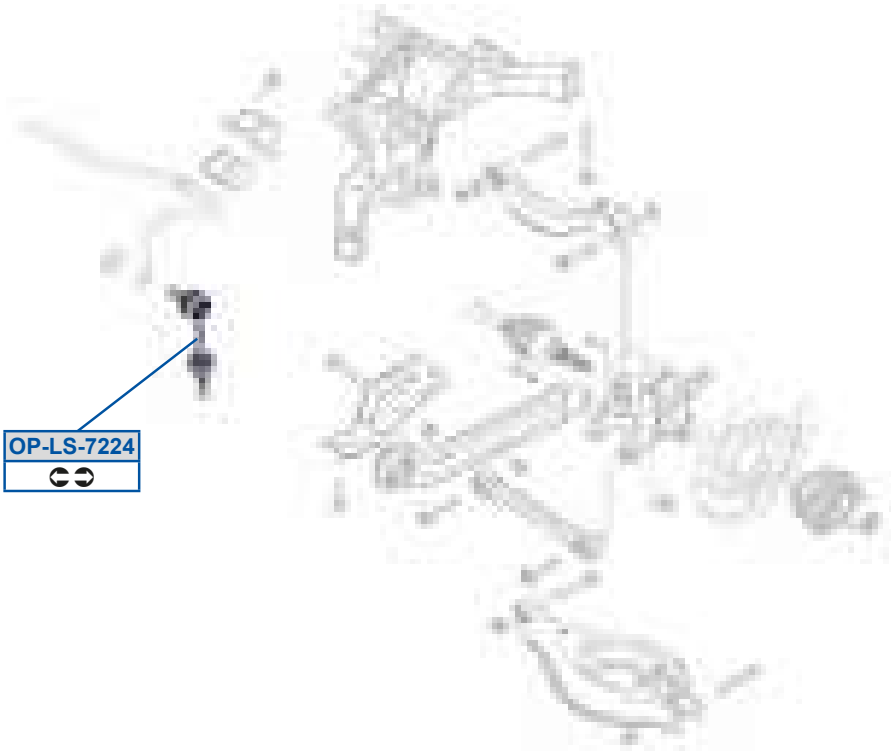
OP-LS-7224

_ a5Oi 5E>>9
GCGCBECB /40

_ a5dP5FEF8
BF79CBA3BF8EEED

_ a5PX5BEBC
8C9GAG9B3BF7DA77 /40

_ a5h a5E>>>
BF7DA773BF87FA8

_ a5Sd5BEBD
BF7AB9G

_ a5h a5E>>A
BF7DA783BF89FE7

_ a5Zd5BE8D
BF79GDE3BF7DA7C

_ a5Zd5BE8E
BF79GDD3BF7DA7B

_ a5Zd5E>>B
BF7BDB93BF8ECAG

_ a5dP598BBC
GDF87EC8

_ a5dP5FEEG
GDF8G8D8 /4C3GDF8G8D9 /40

_ aSZ

0cS] 0 P 00GE1	897GE 9; 789	0cS] 0 P 0eP4eT1	8A7GF 8F789
0cS] 0 P 00GE1	897GE 9; 789	0cS] 0 Q uéO0GE1	8A7GF 8F789

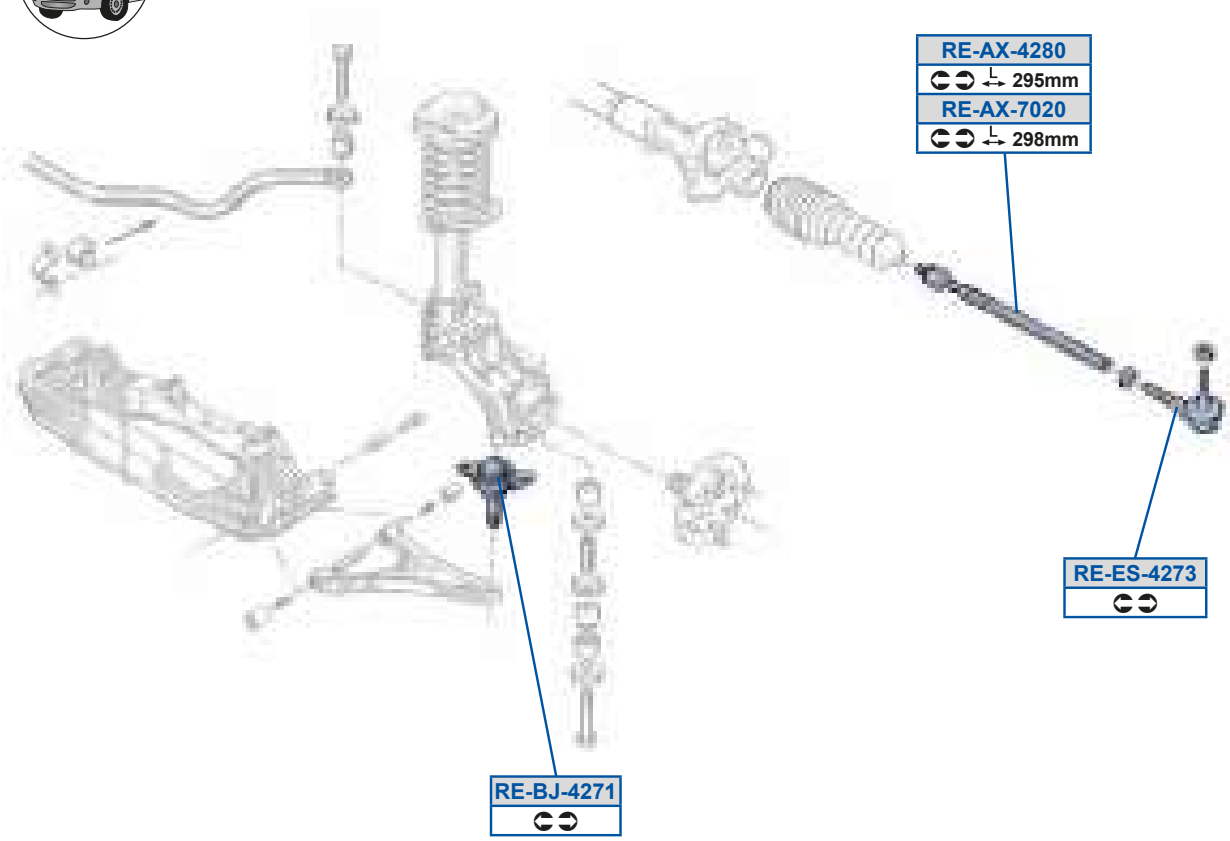

c S5Oi 5B>F8
EE78BDBA8A

c S5Oi 5E8>8
BB7AF7D

c S5PX5B>E9
BB7ADB8

c S5Sd5B>EA
BB7ADD83G888DD8

_ aSZ

OdecO T ŒG; 1	8G7G9	8G7GF	OdecO T QZOddWQ S t x ŒG; 1	897GF	8978C
OdecO T QZOddWQ Vt vÉut v ŒG; 1	897GF	8F78;	OdecO T QZOddWQ dt ŒG; 1	897GF	8F78;
OdecO T Q x áu x ŒG; 1	8A7GA	8A789	OdecO T S t x ŒG; 1	8G7G9	897GF
OdecO T Vt vÉut v ŒG; 1	8G7G9	897GF	OdecO T gt ŒG; 1	987G9	897GG

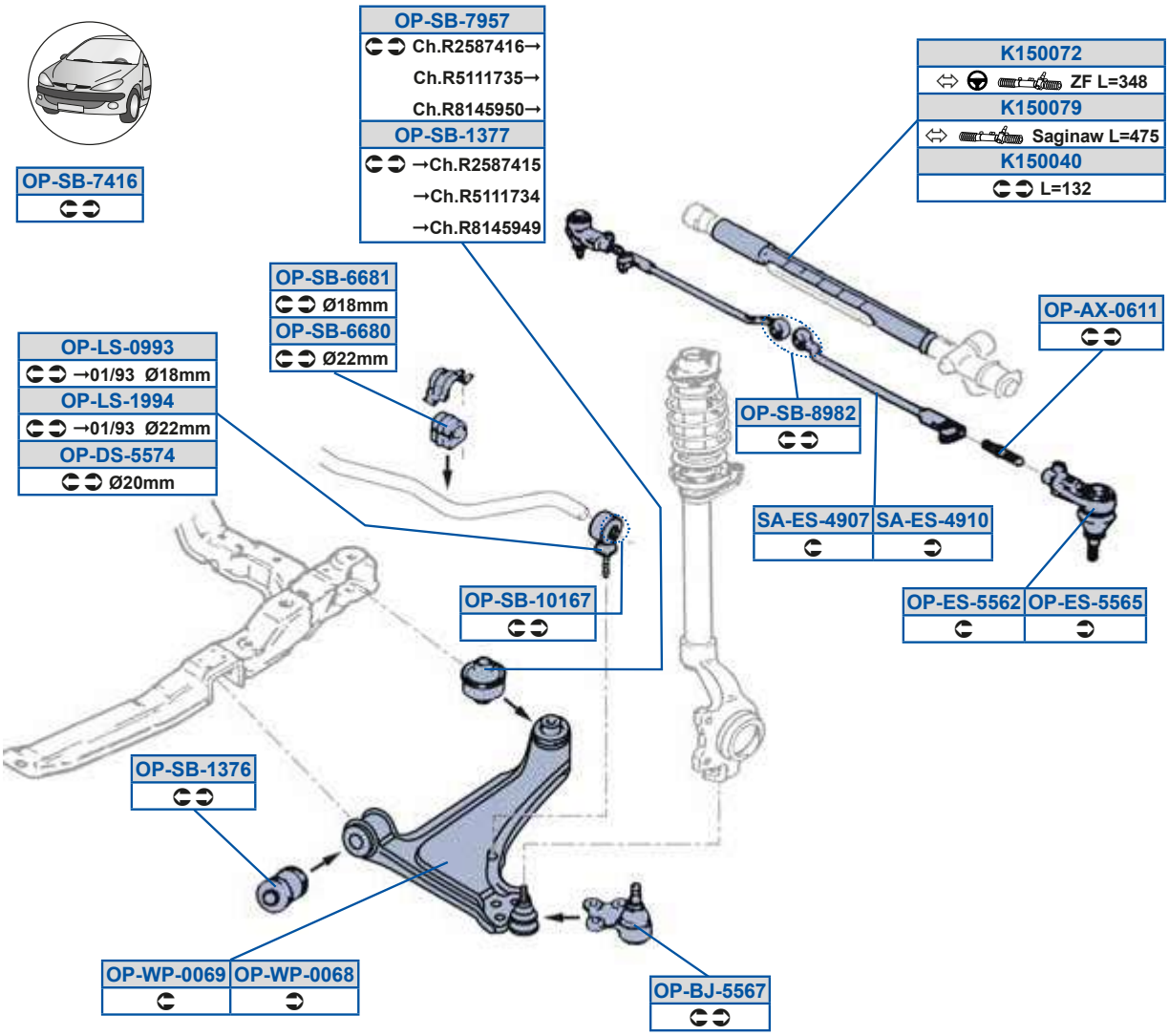

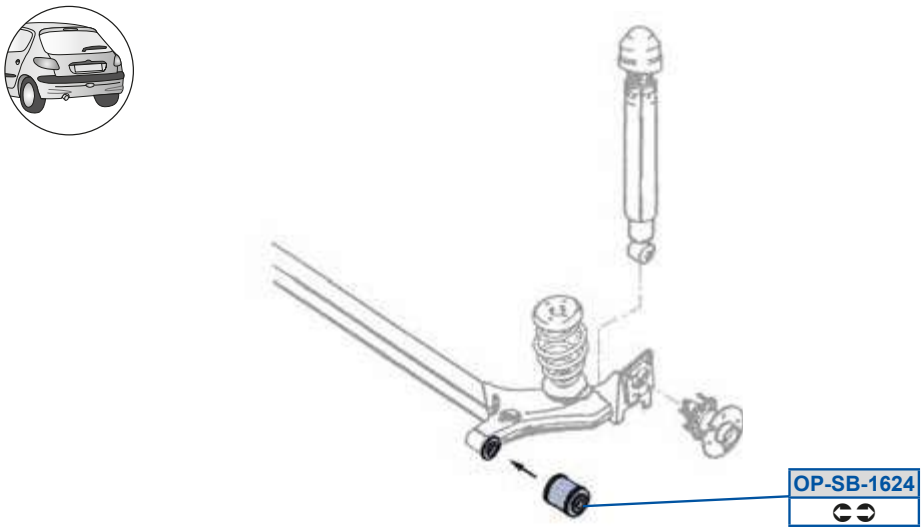

MOOG

Y9C88B8
8D7G7BC38D7G7EA

_ a5Zd58GGA
7AC79D83AC79D8

_ a5dP5EB9D
ACABD7

Y9C88E>
8D7G7ED3G7BB9888

_ a5Zd59GGB
7AC79D73AC79D7

_ a5dP5EGCE
AC9AC93AC9ACD

Y9C88EG
G79F9G

_ a5dP5989DE
AC78CA

_ a5dP5FGF>
A998BE /403B9B9DEA /40

_ a5Oi 58D99
7A99CED37A99CEE

_ a5dP59AED
7AC9A7737AC9ABD

_ a5h a588DF
AC97ED3AC98G9

_ a5PX5CCDE
8D7A89838D7A8DA

_ a5dP59AEE
7AC9ABE37AC9ABF

_ a5h a588DG
7AC98GA3AC97EB

_ a5Rd5CCEB
7AC79DA3AC79DA

_ a5dP59D>B
7B79DBC3B79DBC

dO5Sd5BG8E
A997EG

_ a5Sd5CCD>
7A9B7CA37A9B7CC

_ a5dP5DDF8
7AC77EF37AC789A

dO5Sd5BG98
A997F7

_ a5Sd5CCDC
7A9B7CB37A9B7CD

_ a5dP5DDF9
AC77F83AC7899

Odec O U P 0TE81	897GG 8B78C	Odec O U Q x úı x	8A789 9878C
Odec O U Q x ŒGF1	8A788 8C78C	Odec O U S t x ŒGF1	8; 7GF 9; 78G
Odec O U Vt vÉut v ŒGF1	8; 7GF 9; 78G	Odec O U dt ŒGF1	8G7GF 9; 78G

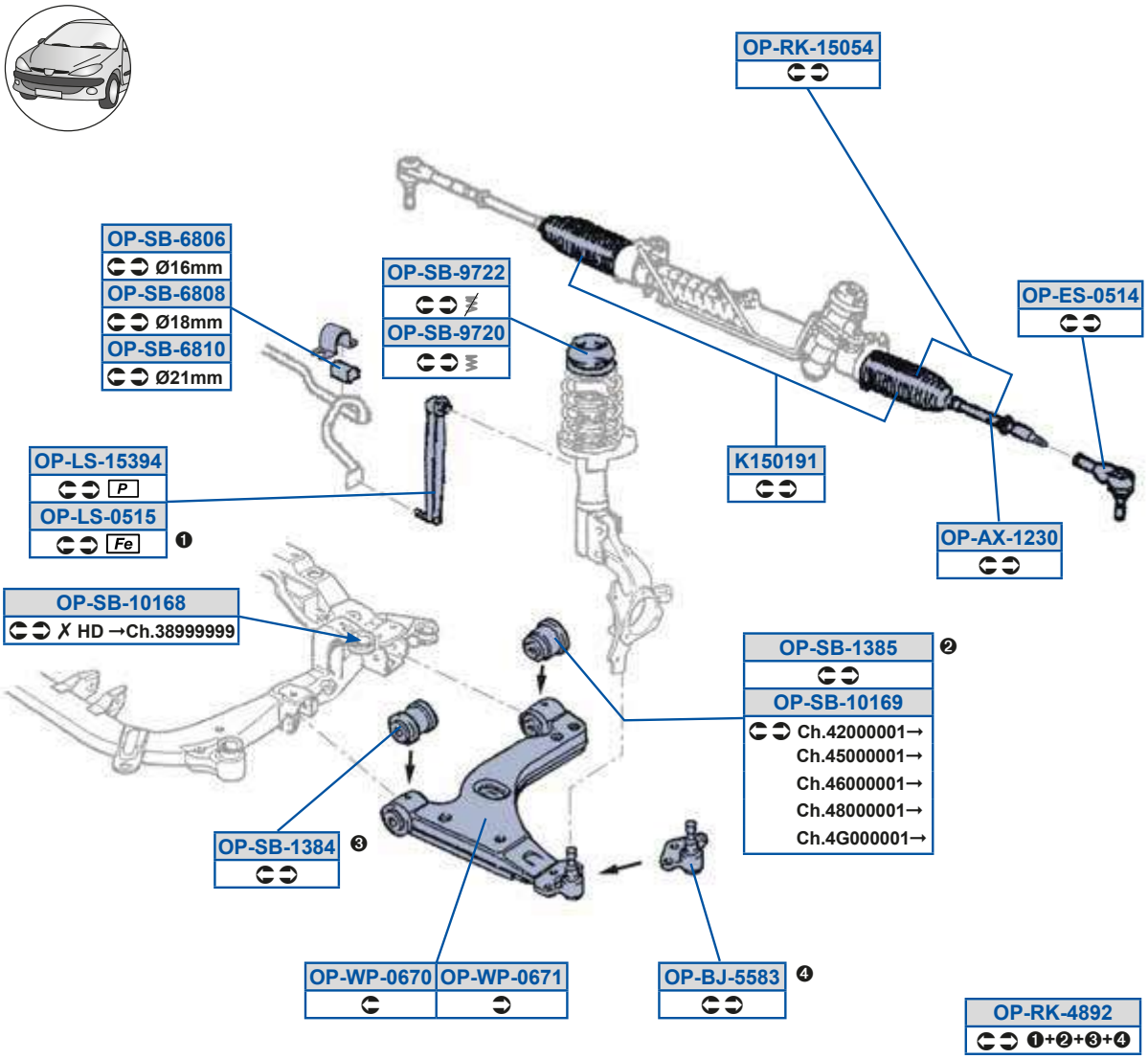

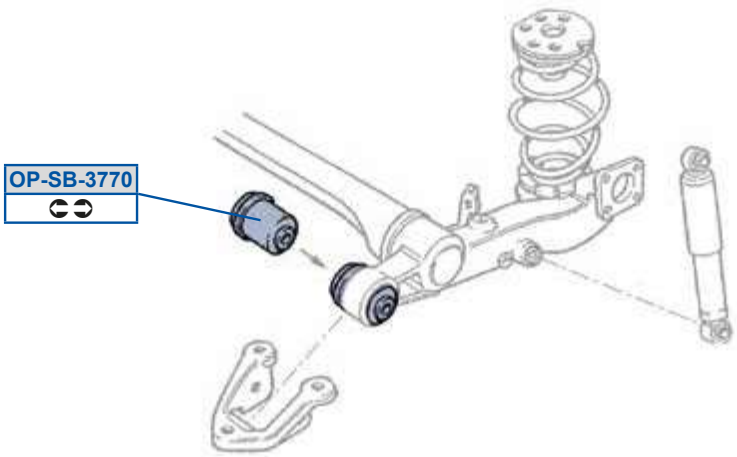

MOOG

Y9C89G9
8D7G87G39D7CG9GC

_ a5dP5989DF
A799EC3A799G7

_ a5dP5GE>8
7ABBC9C

_ a5Oi 59>A8
8D7A98A38D7A98D

_ a5dP5989DG
A797DE

_ a5dP5GE>>
ABBC9A3G7BDFCCB

_ a5PX5CCFA
7AC9F7737AC9F9G

_ a5dP59AFB
AC9ACE3AC9ADB

_ a5h a58DE8
CAC978D

_ a5Sd58C9B
8D7A98B38D7A98C

_ a5dP59AFC
7AC9ADC3AC9ADC

_ a5h a58DE9
CAC978E

_ a5Zd58C9C
AC7D883AC7D8B

_ a5dP5AEE8
7B79DBB3B79DBB

_ a5Zd59CAGB
AC78ED3AC7D88

_ a5dP5DF8D
7AC78A73AC78A7

_ a5cY59C8CB
8D7A98A38D7A98D

_ a5dP5DF8F
7AC78AF3AC78AF

_ a5cY5BFG>

_ a5dP5DF98
AC78D8

_ aSZ

Odec O V	8978B	8C79B	Odec O V 008B1	9978C	98798
Odec O V S t x	8F78B	8C79B	Odec O V S t x 008B1	9978C	98798
Odec O V UeQ	8A78C	98798	Odec O V UeQ 008B1	9978C	98798
Odec O V dt	8; 78E	8C79B	Odec O V e é e	8G78C	98798
Odec O V e é e 008B1	9878C	98798	Odec O V gt	8; 78B	98798

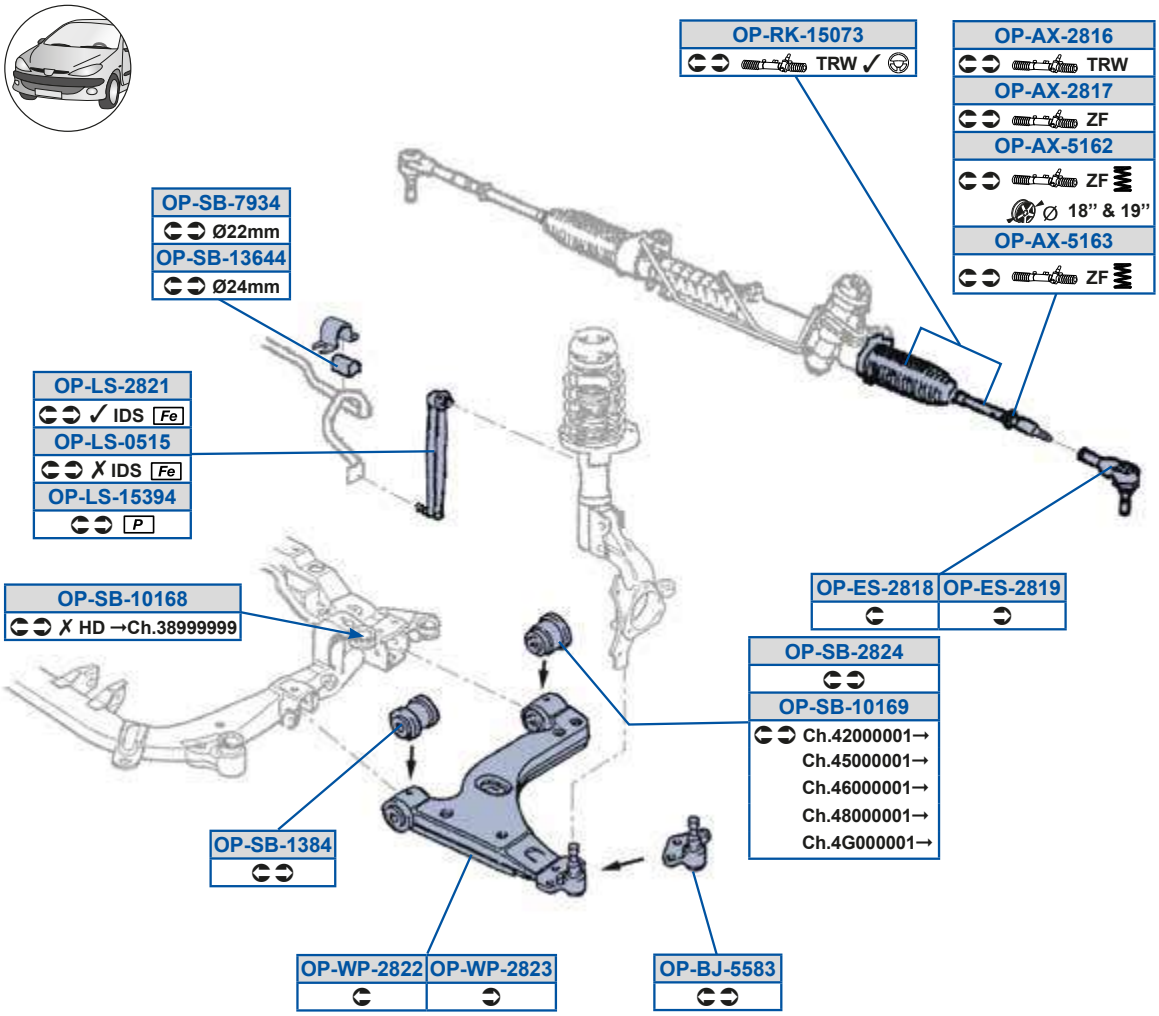

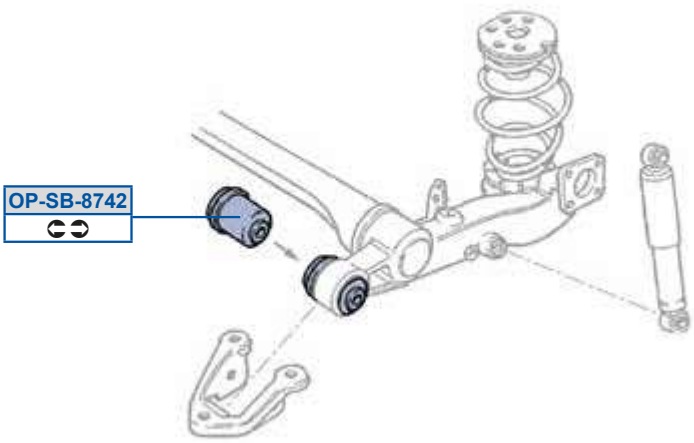

MOOG

_ a5Oi 5>F9D
8D7A9CD38D7AA79

_ a5Zd59CAGB
AC78ED3AC7D88

_ a5dP5EGAB
AC788E

_ a5Oi 5>F9E
8D7A9DB38D7AACE

_ a5Zd5>F>9
9BBD8ACA3AC7D8A

_ a5dP5FEB>
8A887B8F38A9DE98C

_ a5Oi 5C9D>
8D7A9DC38D7A9DF

_ a5cY59C8EA
8D7A98A38D7A98D

_ a5h a5>F>>
9BBCBBEE3CAC979G

_ a5Oi 5C9DA
8D7A9DC38D7AACF

_ a5dP5989DF
A799EC3A799G7

_ a5h a5>F>A
9BBCBBEF3CAC97A7

_ a5PX5CCFA
7AC9F7737AC9F9G

_ a5dP5989DG
A797DE

_ a5Sd5>F9F
8D7A9CF38D7A9DD

_ a5dP59ADBB
AC7AG8

_ a5Sd5>F9G
8D7A9CE38D7A9DE

_ a5dP59AFB
AC9ACE3AC9ADB

_ a5Zd58C9C
AC7D883AC7D8B

_ a5dP5>F>B
AC9A9B

_ aSZ

Odec O X 0a981	9; 78G	Odec O X UeQ	98799
Odec O X dt	8D79;	Odec O X d e x 0a981	98798

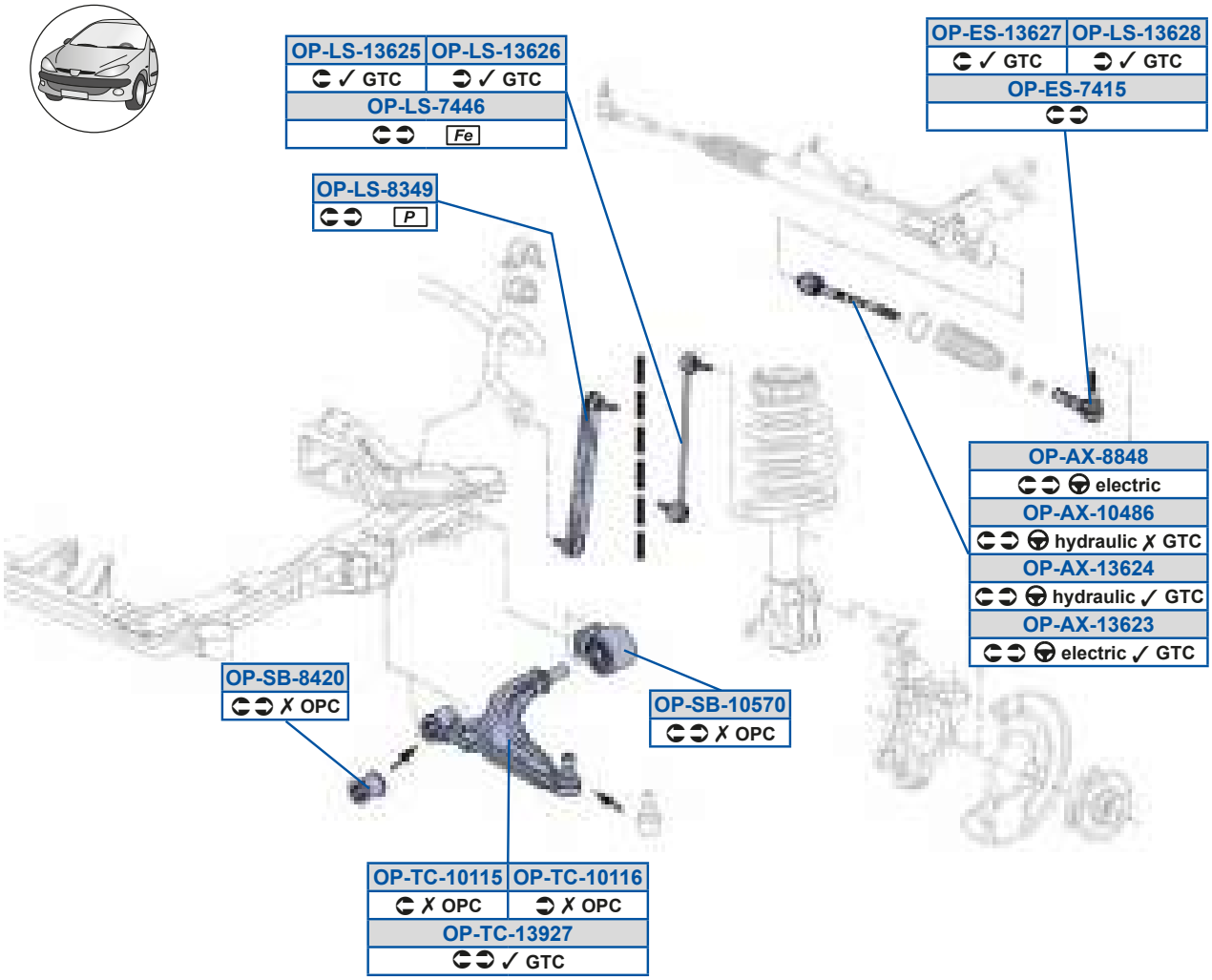

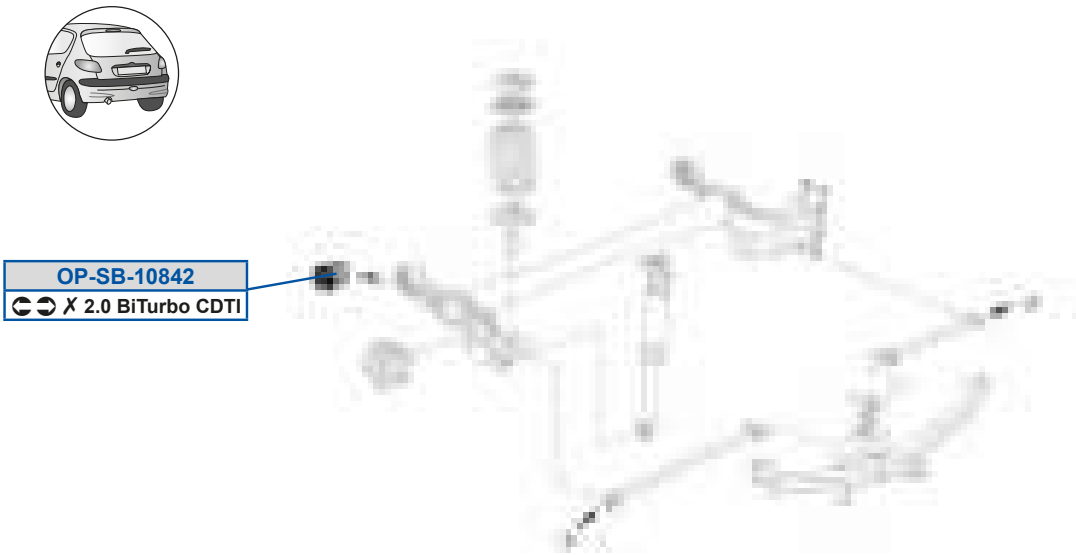

MOOG

_ a5Oi 598BFD
8A9EFACF3G9777E

_ a5Oi 59AD>A
8AACBCB938D7G8FE

_ a5Oi 59AD>B
8D7G8DG

_ a5Oi 5FFBF
8A9FDDFE38D7G79E

_ a5Sd59AD>E
8D7G8AE38D7G8FC

_ a5Sd59AD>F
8D7G8DB38D7G8FD

_ a5Sd5EB9C
8A9E977738D7G79D

_ a5Zd59AD>C
AC78G9

_ a5Zd59AD>D
AC78GA

_ a5Zd5EBBD
8A9CF7C93AC7D8F

_ a5Zd5FABG
AC7D8E

_ a5dP598CE8
AC987F3AC9BG8

_ a5dP598FB>
8AA88G973B7979E

_ a5dP5FB>8
8A98G7G73AC9FDD

_ a5eQ59899C
AC98873AC9BG9

_ a5eQ59899D
AC988C3AC9BGA

_ a5eQ59AG>E
AC9C883AC9C89

Odec O Y OP9D1	8D79C	Odec O Y d e x OP9D1	9979C

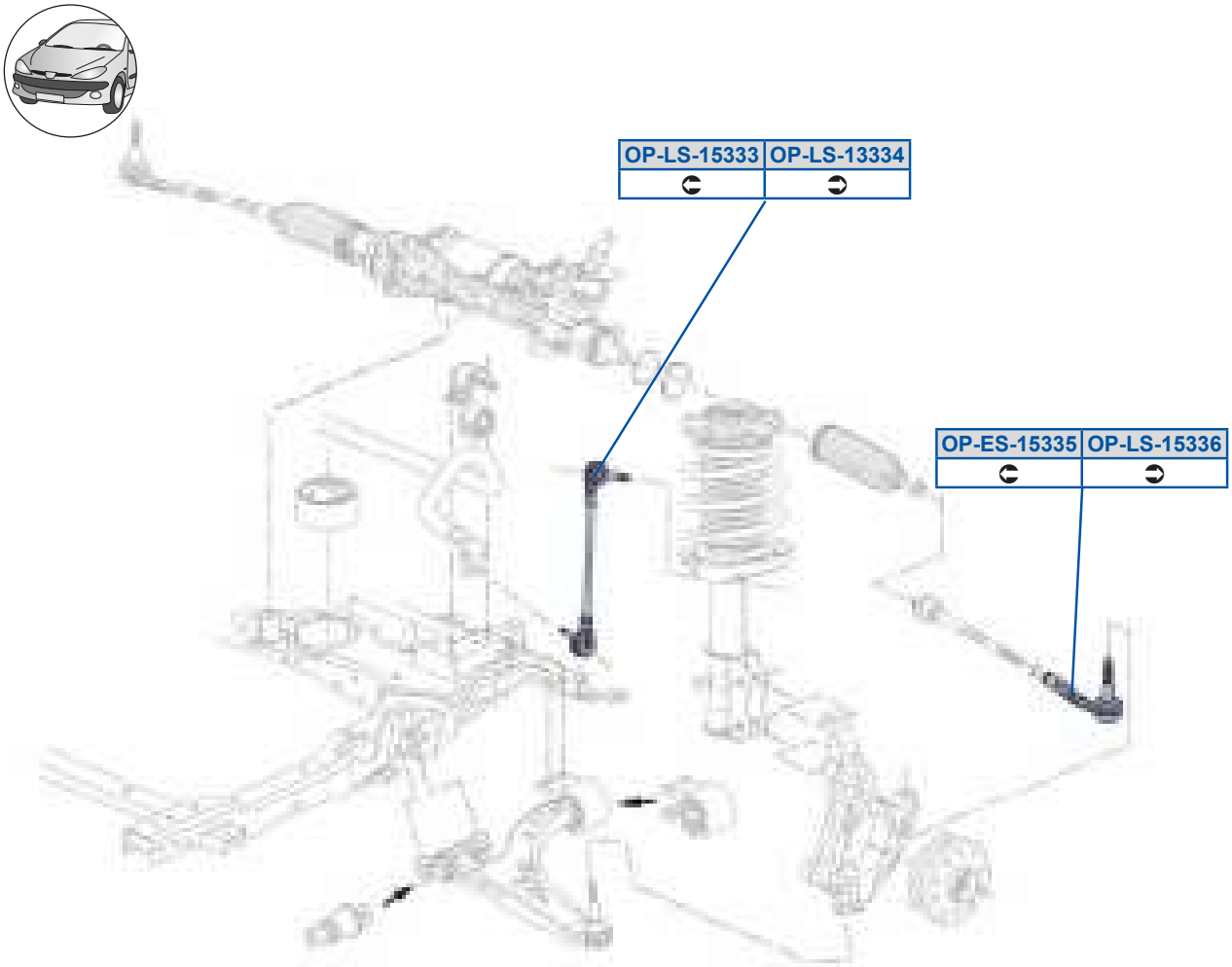

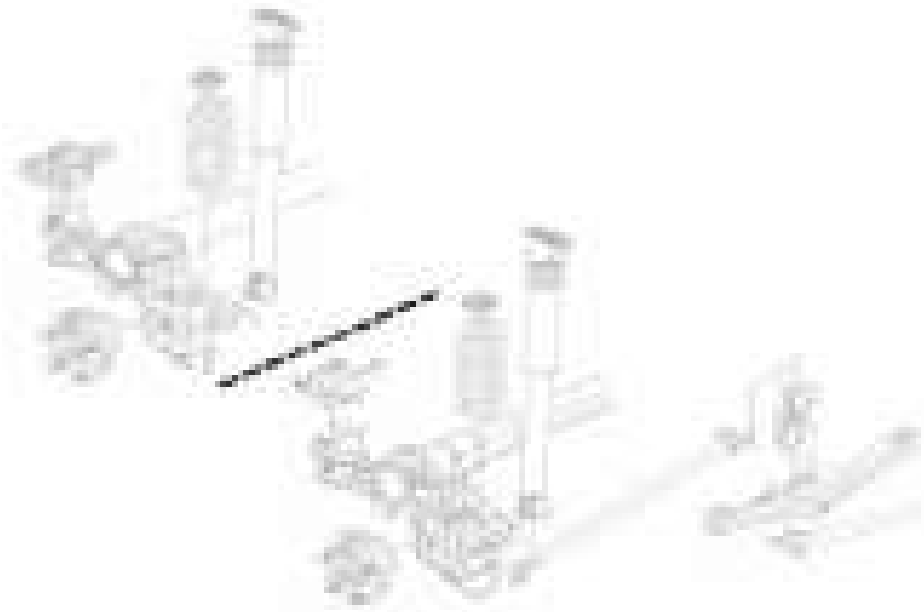

MOOG

_ a5Sd59CAAC
AG77F7FB

_ a5Sd59CAAD
AG77F7FA

_ a5Zd59CAAA
AG77877A

_ a5Zd59CAAB
AG77877B

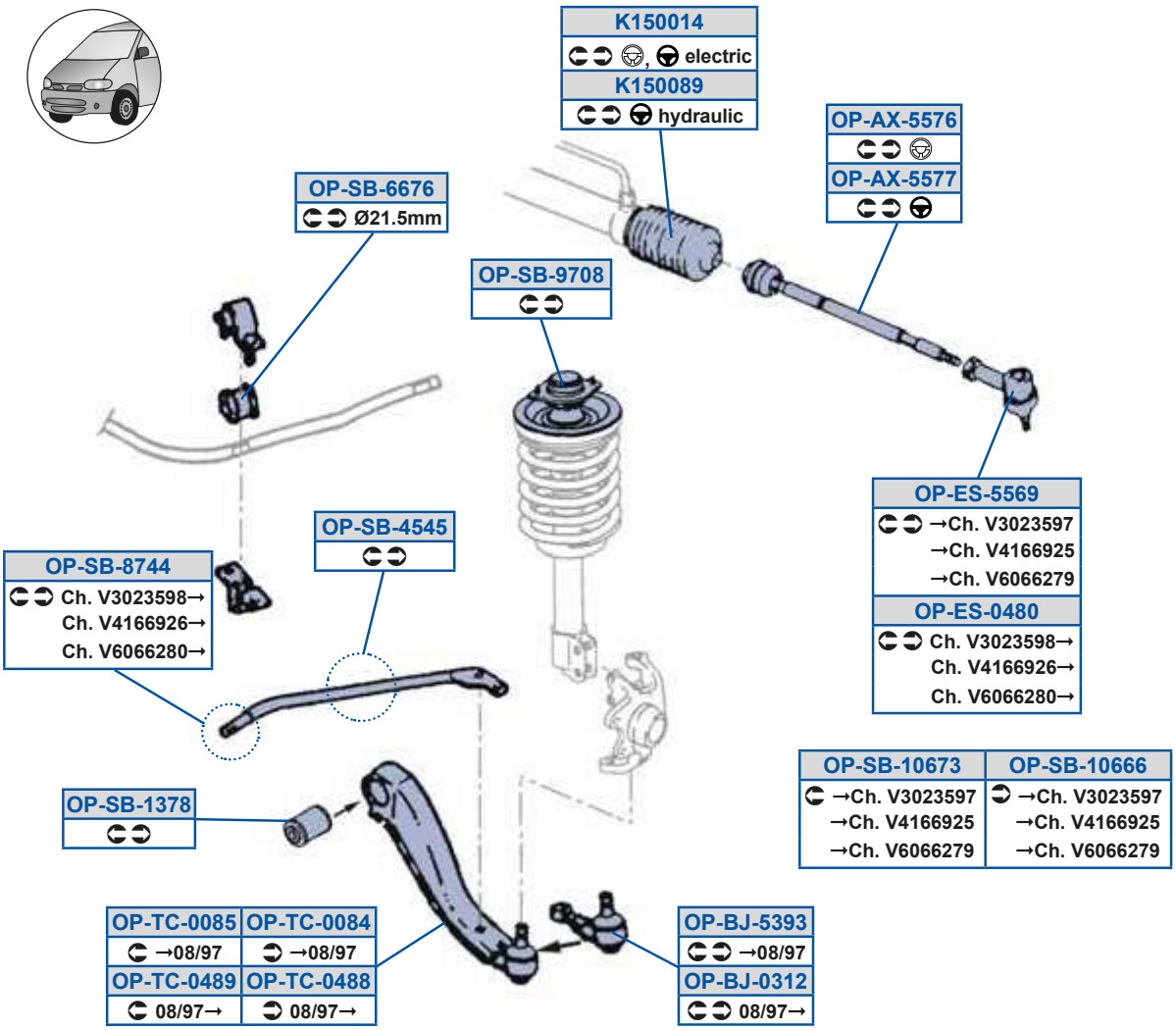

OP-SB-8745

MOOG

Y9C889B
7G79F9D39D78779G

_ a5dP598DDD
ACA9F73G7BBC878

_ a5eQ588FB
AC97793AC98F9

Y9C88FG
8D7G7FE39D7A99FD

_ a5dP598DEA
ACA9F83G7BBC877

_ a5eQ588FC
AC977A3AC98F8

_ a5Oi 5CCED
7A998CC38D7ABCA

_ a5dP59AEF
7AC9A783AC9A78

_ a5eQ58BFF
AC97893CAC9789

_ a5Oi 5CCEE
7A998CF3A998CF

_ a5dP5BCBC
7ACACD83ACACD8

_ a5eQ58BFG
AC97883CAC9788

_ a5PX58A9>
8D7A979

_ a5dP5DDED
7AC789E3AC789E

_ a5PX5CAGA
8D7A89F38D7A8D8

_ a5dP5FEBB
ADACD93G7CAG7CE

_ a5Sd58BF8
7A9B7DD38D7ABCC

_ a5dP5FEBC
9BBBAF8C3CB79DAD

_ a5Sd5CCDG
7A9B7C738D7A77G

_ a5dP5GE8F
887B97883A89C7A

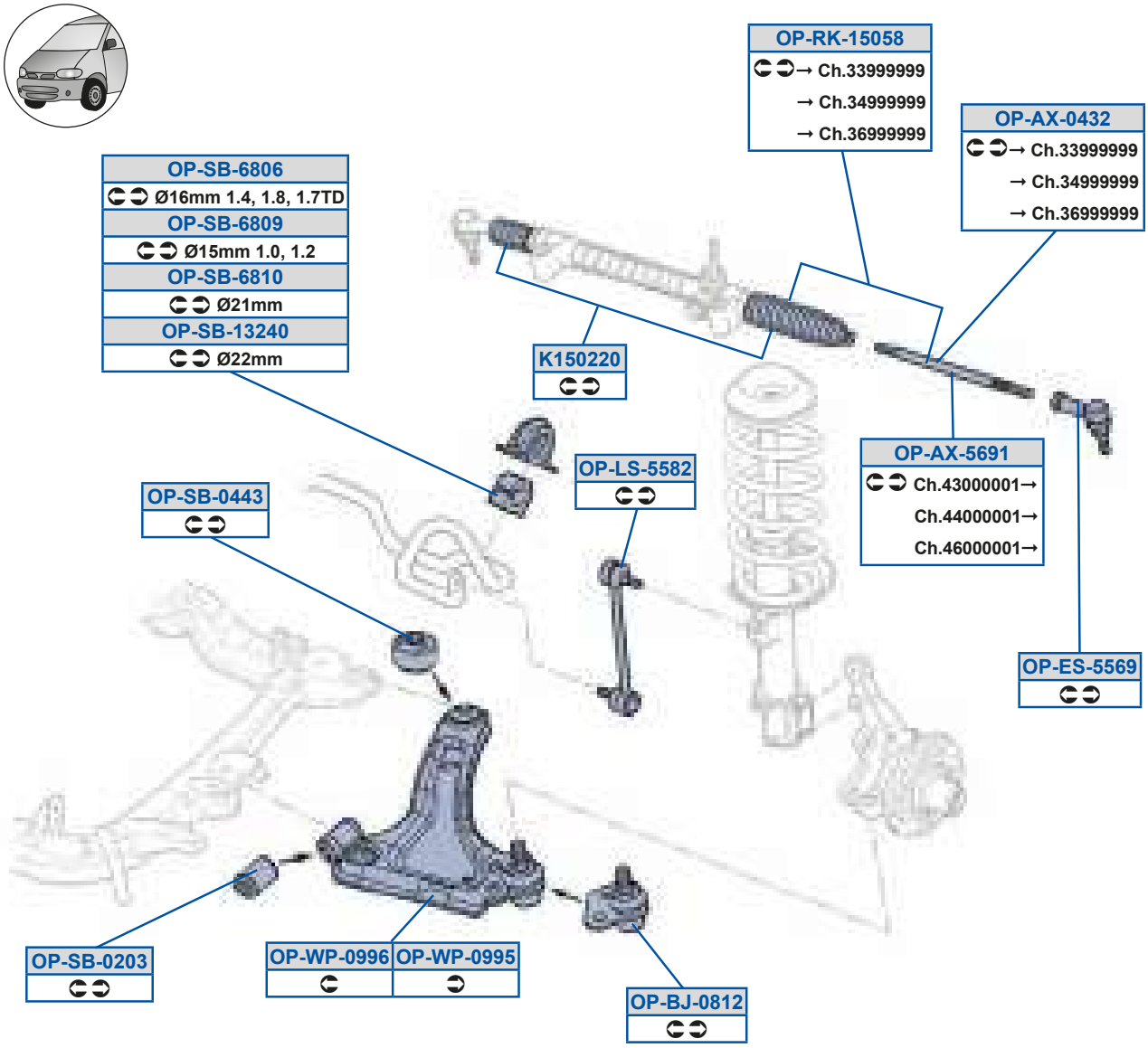
OP-RK-15058
→ Ch.33999999
→ Ch.34999999
→ Ch.36999999
OP-AX-0432
→ Ch.33999999
→ Ch.34999999
→ Ch.36999999
OP-SB-6806
Ø16mm 1.4, 1.8, 1.7TD
OP-SB-6809
Ø15mm 1.0, 1.2
OP-SB-6810
Ø21mm
OP-SB-13240
Ø22mm
K150220
OP-LS-5582
OP-AX-5691
Ch.43000001→
Ch.44000001→
Ch.46000001→
OP-SB-0443
OP-ES-5569
OP-SB-0203
OP-WP-0996
OP-WP-0995
OP-BJ-0812

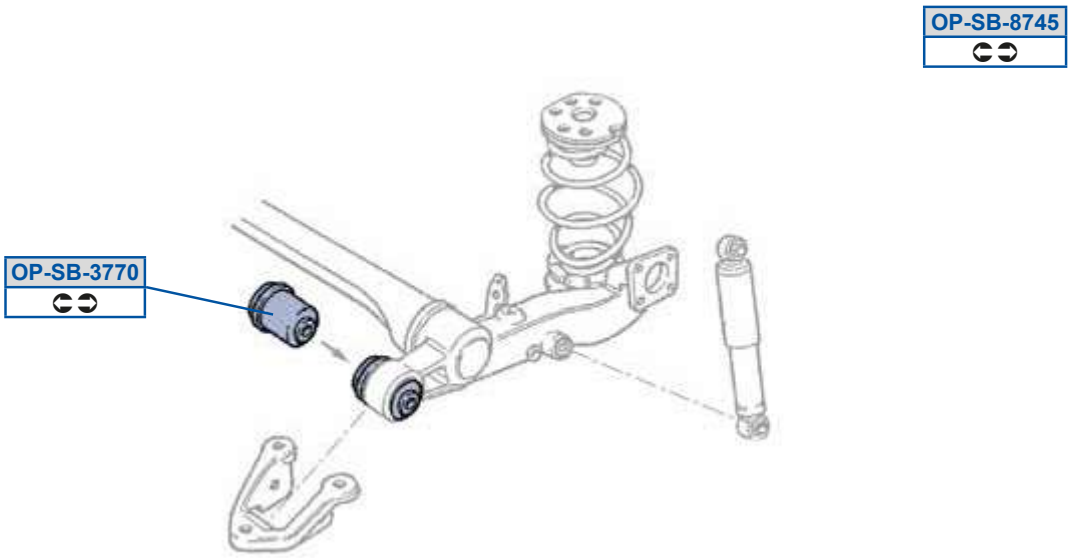
OP-SB-8745
OP-SB-3770

Y9C8>>8
8D7G898

_a5dP58BBA
8A8AF8C839BBA787A

_a5h a58GGD
AC97B83AC97BC

_a5Oi 58BA>
8D7A77F38D7A77F /40

_a5dP59A>B8
AC78BA

_a5Oi 5CDG9
8D7A78E38D7AFBB

_a5dP5AEE8
7B79DBB3B79DBB

_a5PX58F9>
7AC9F7A3AC9F7A

_a5dP5DF8D
7AC78A73AC78A7

_a5Sd5CCDG
7A9B7C738D7A77G

_a5dP5DF8G
AC787B

_a5Zd5CCF>
AC7D873G7BGD88D

_a5dP5DF98
AC78D8

_a5cY59C8CF
8D7A77F38D7A77F /40

_a5dP5FEBC
9BBBAF8C3CB79DAD

_a5dP58>8A
AC9A7G3AC9ADD

_a5h a58GGC
7AC97B937AC97DA

Q_cdO P OdGA1	8A7GA 9; 78;	Q_cdO P P OdGA1	8F7GG 8G788
Q_cdO P S t x OdGA1	897GG 9; 78;		

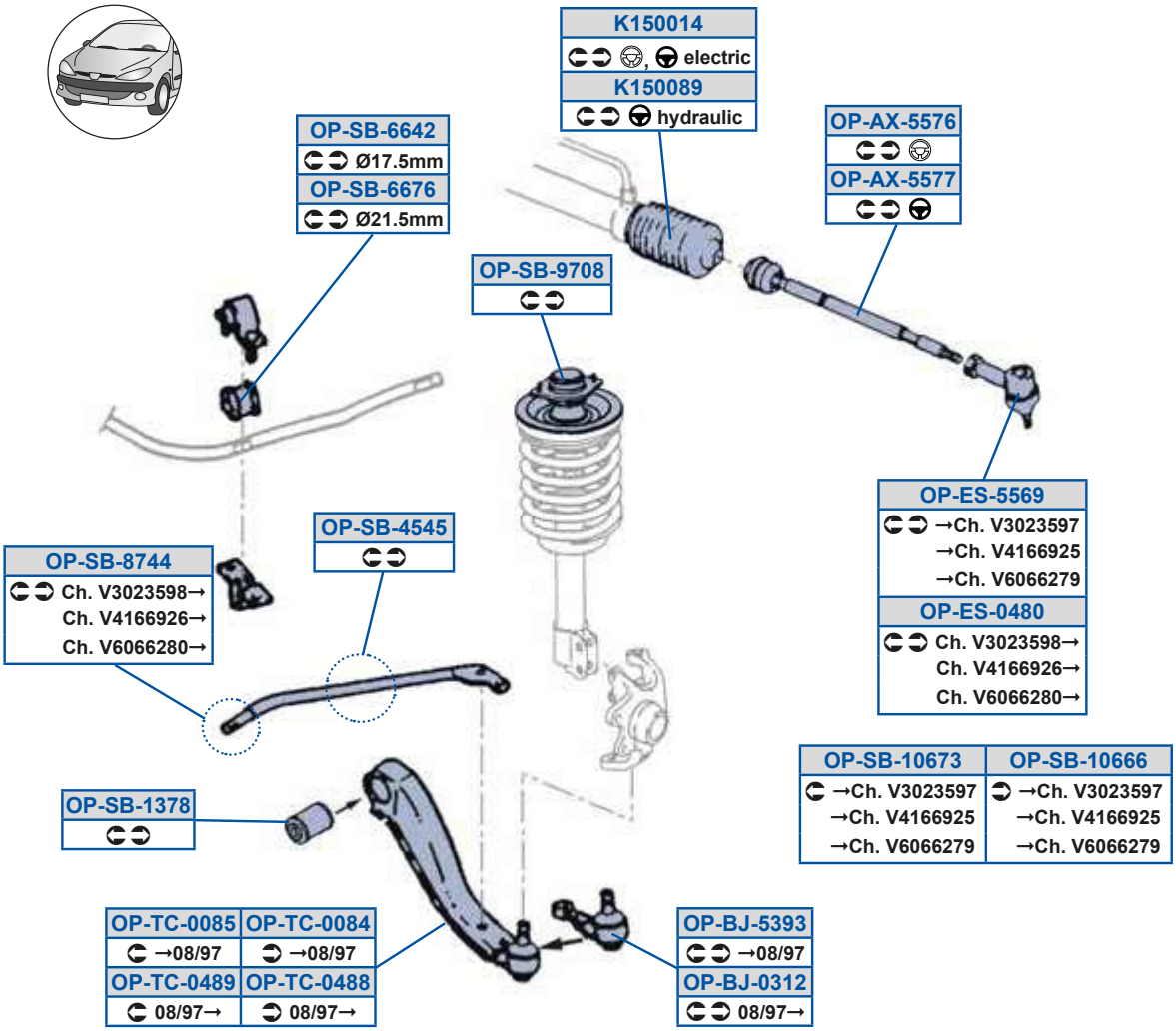

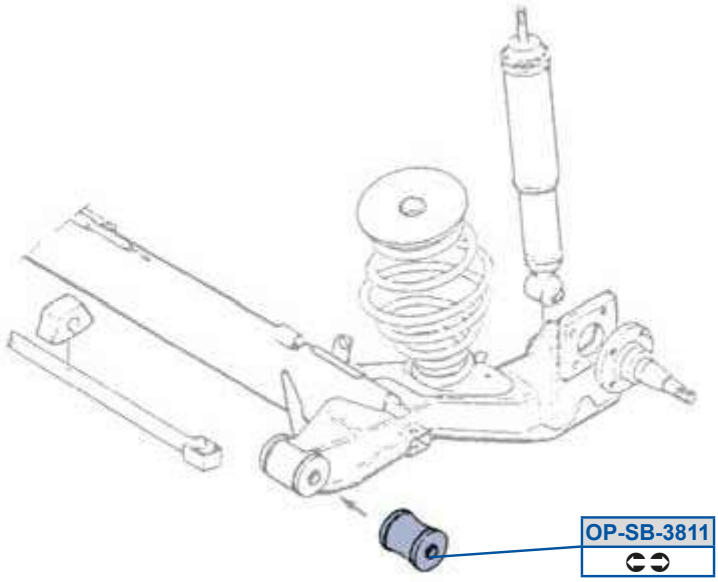

MOOG

Y9C389B
7G79F9D39D78779G

_ a5dP598DDD
ACA9F73G7BBC878

_ a5dP5FEBC
9BBBAF8C3CB79DAD

Y9C38FG
8D7G7FE39D7A99FD

_ a5dP598DEA
ACA9F83G7BBC877

_ a5dP5GE8F
887B97883A89C7A

_ a5Oi 5CCED
7A998CC38D7ABCA

_ a5dP59AEF
7AC9A783AC9A78

_ a5eQ588FB
AC97793AC98F9

_ a5Oi 5CCEE
7A998CF3A998CF

_ a5dP5AF99
B79DBA

_ a5eQ588FC
AC977A3AC98F8

_ a5PX58A9>
8D7A979

_ a5dP5BCBC
7ACACD83ACACD8

_ a5eQ58BFF
AC97893CAC9789

_ a5PX5CAGA
8D7A89F38D7A8D8

_ a5dP5DDB>
AC787G3G78DFD79

_ a5eQ58BFG
AC97883CAC9788

_ a5Sd58BF8
7A9B7DD38D7ABCC

_ a5dP5DDED
7AC789E3AC789E

_ a5Sd5CCDG
7A9B7C738D7A77G

_ a5dP5FEBB
ADACD93G7CAG7CE

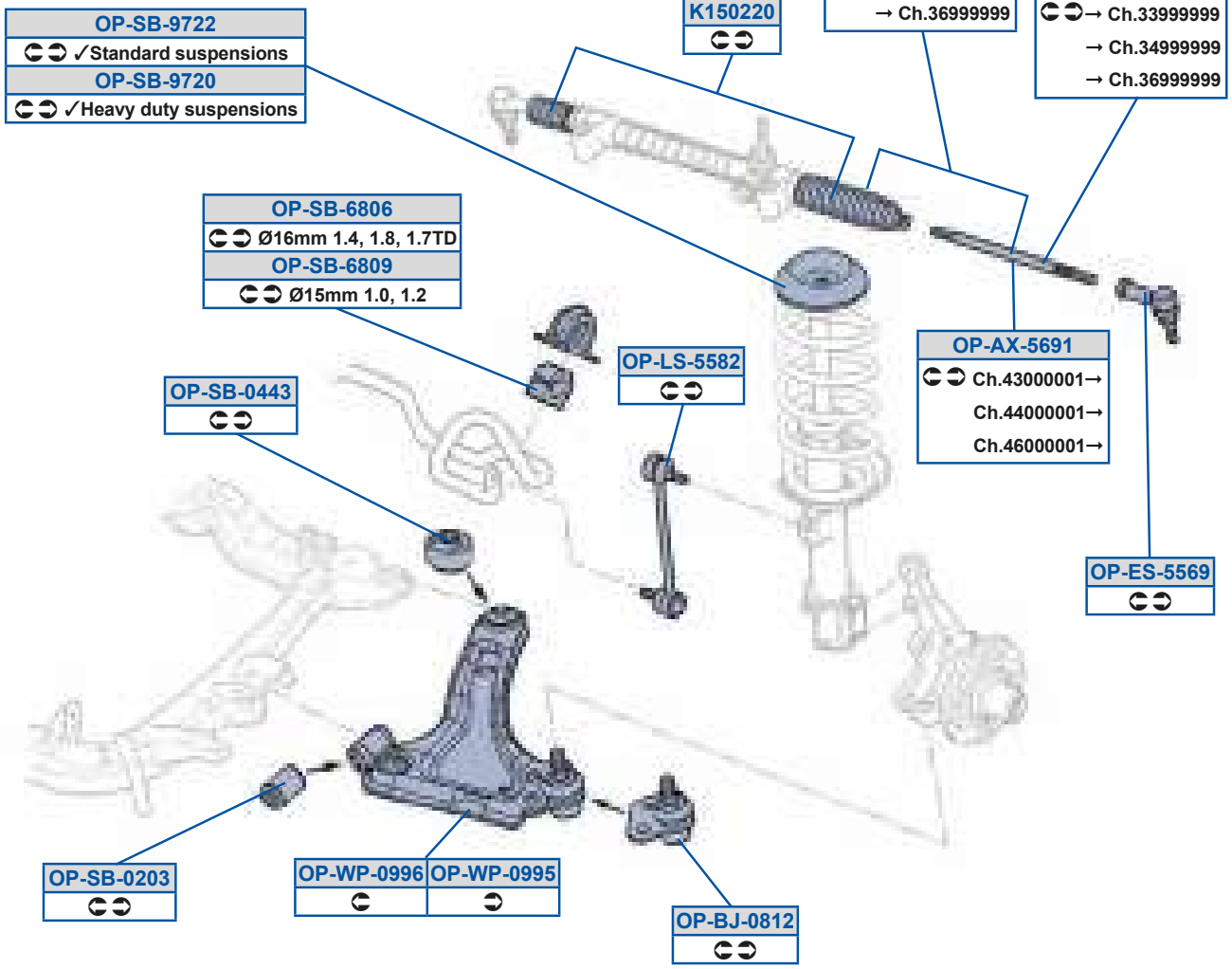
OP-SB-9722
✓Standard suspensions
OP-SB-9720
✓Heavy duty suspensions
OP-SB-6806
Ø16mm 1.4, 1.8, 1.7TD
OP-SB-6809
Ø15mm 1.0, 1.2
OP-SB-0443
K150220
OP-RK-15058
→ Ch.33999999
→ Ch.34999999
→ Ch.36999999
OP-AX-0432
→ Ch.33999999
→ Ch.34999999
→ Ch.36999999
OP-LS-5582
OP-AX-5691
Ch.43000001→
Ch.44000001→
Ch.46000001→
OP-ES-5569
OP-SB-0203
OP-WP-0996
OP-WP-0995
OP-BJ-0812

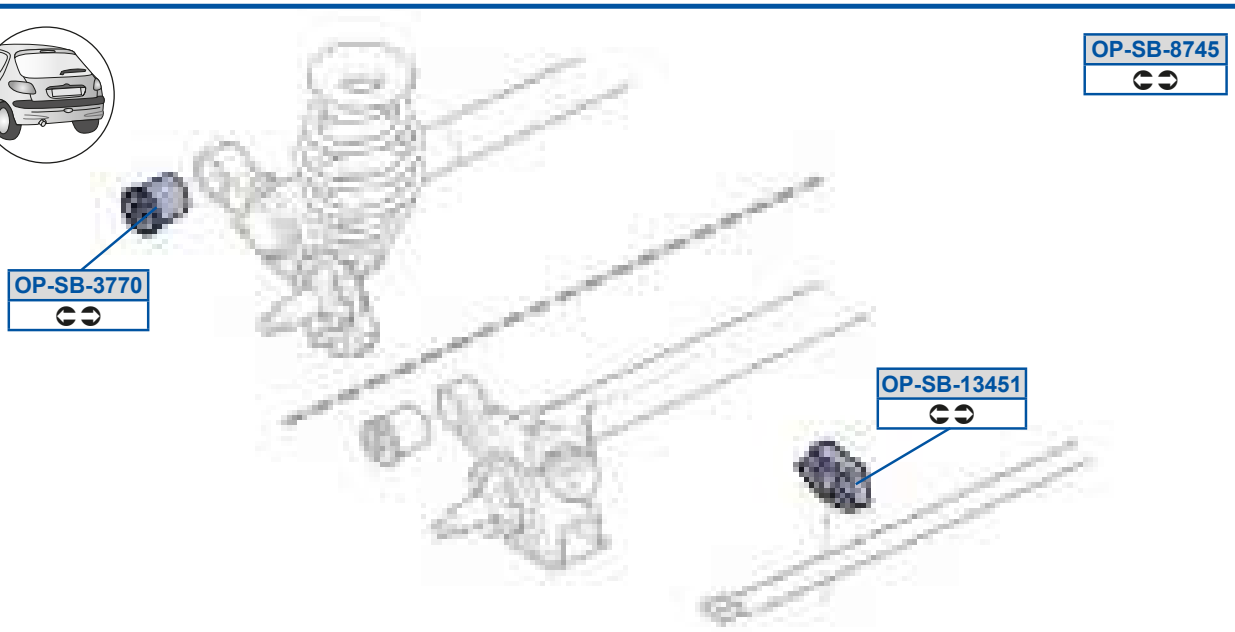
OP-SB-8745
OP-SB-3770
OP-SB-13451

Y9C8>>8
8D7G898

_ a5dP58BBA
8A8AF8C839BBA787A

_ a5h a58GGC
7AC97B937AC97DA

_ a5Oi 58BA>
8D7A77F38D7A77F /40

_ a5dP59ABC9
BBBAAC

_ a5h a58GGD
AC97B83AC97BC

_ a5Oi 5CDG9
8D7A78E38D7AFBB

_ a5dP5AEE8
7B79DBB3B79DBB

_ a5PX58F9>
7AC9F7A3AC9F7A

_ a5dP5DF8D
7AC78A73AC78A7

_ a5Sd5CCDG
7A9B7C738D7A77G

_ a5dP5DF8G
AC787B

_ a5Zd5CCF>
AC7D873G7BGD88D

_ a5dP5FEBC
9BBBAF8C3CB79DAD

_ a5c Y59C8CF
8D7A77F38D7A77F /40

_ a5dP5GE>8
7ABBC9C

_ a5dP58>8A
AC9A7G3AC9ADD

_ a5dP5GE>>
ABBC9A3G7BDFCCB

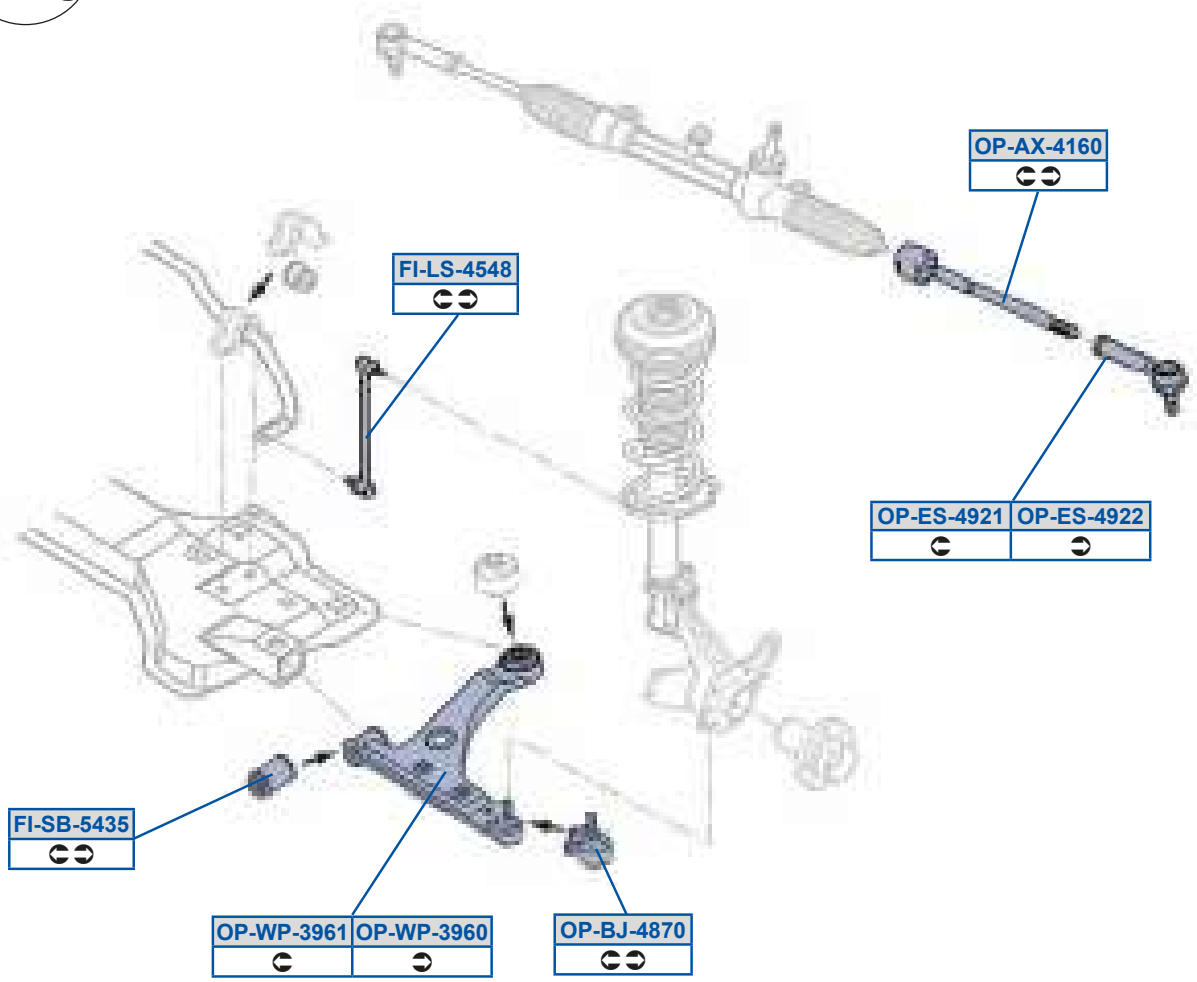
OP-AX-4160
FI-LS-4548
OP-ES-4921
OP-ES-4922
FI-SB-5435
OP-WP-3961
OP-WP-3960
OP-BJ-4870

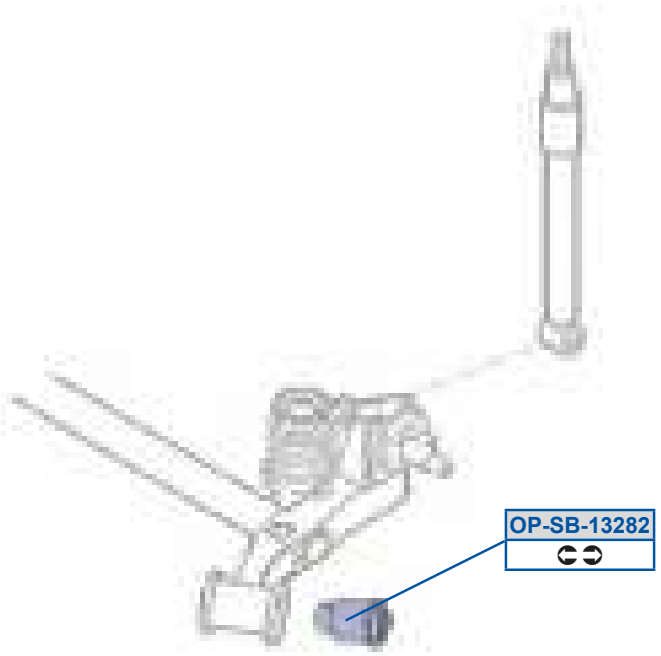
OP-SB-13282

TVWZd5BCBF
AC78EC3AC7D8D

TV6dP5CBAC
8A9D7DDD3AC9AF7

_a5Oi 5B9D8
8D7ABCD38D7ACBA

_a5PX5BFE8
AC97DE3AC97FE

_a5Sd5BG>9
8D7ACBB38D7GBCE

_a5Sd5BG>>
8D7ACBC38D7GBCF

_a5dP59A>F>
8A9C8CG73B79CAF

_a5ha5AGD8
AC9CBA3CAC97AF

_a5ha5AGD9
AC9CB93CAC97AG

_ aSZ

Tc _] eSc0 P 0f GG1	987GF	[_] eSc Sk P 0[GF1	8E7GF 8F7GG

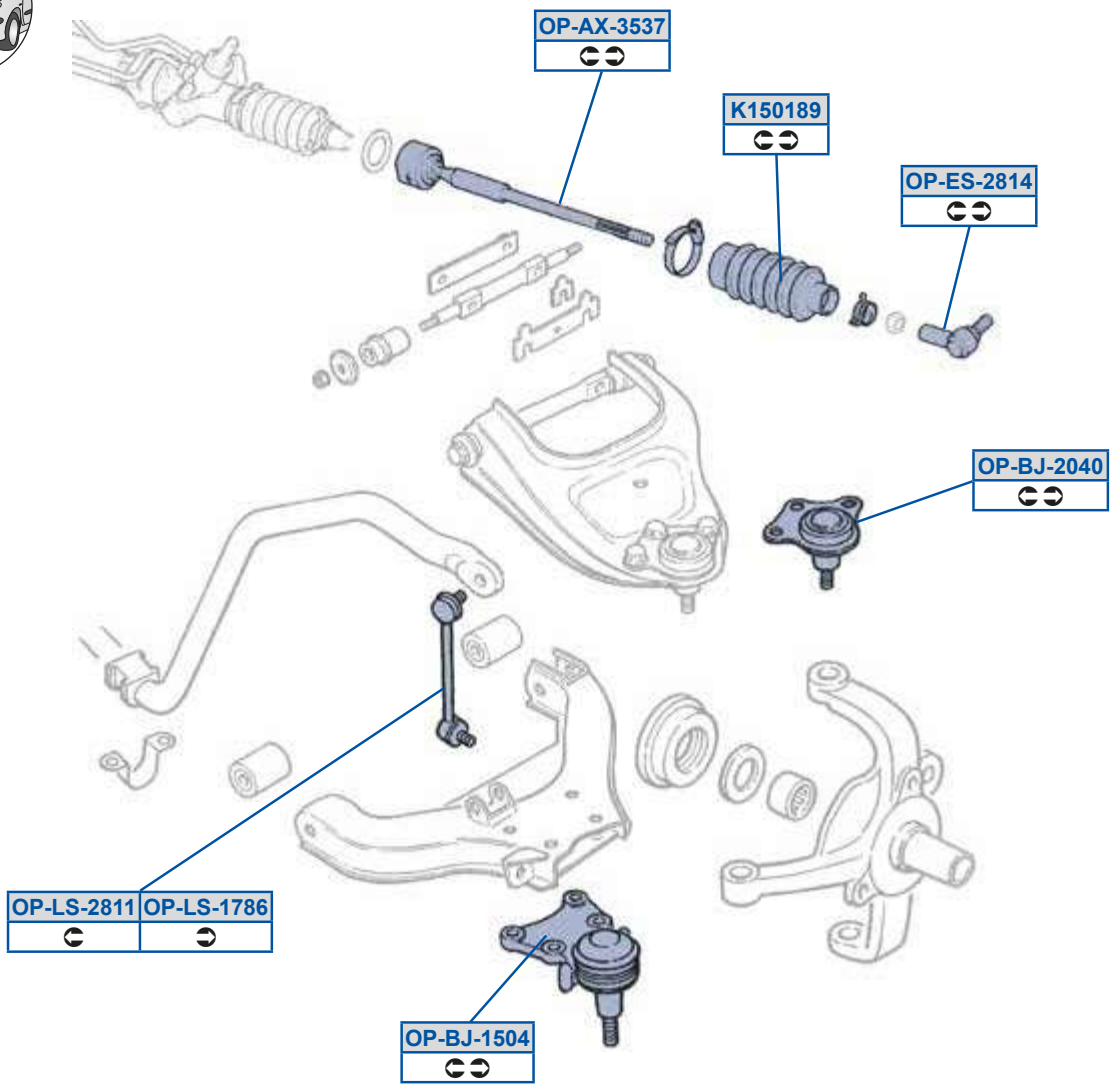

T v r P 5[v v P 0GGF 5L1

MOOG

Y9C89FG
G77G7D3GE8FBF97

_ a5Oi 5ACAE
G77G7C

_ a5PX59C8B
AC9F9F3BA7997G

_ a5PX5>8B8
A87F9A

_ a5Sd5>F9B
G77G7E3GE8FBF98

_ a5Zd59EFD
AC7D7F3CAC9797

_ a5Zd5>F99
AC7D7E3CAC978G

_ aSZ

WdW] W 0 0U8G1	8E78F	WdW] W 0 dt 0U8G1	8E78F
WdW] W 0 d e x 0U8G1	9979B 8979E	WdW] W d e x	8E78F 8A79E

✗ 4x4
✗ OPC

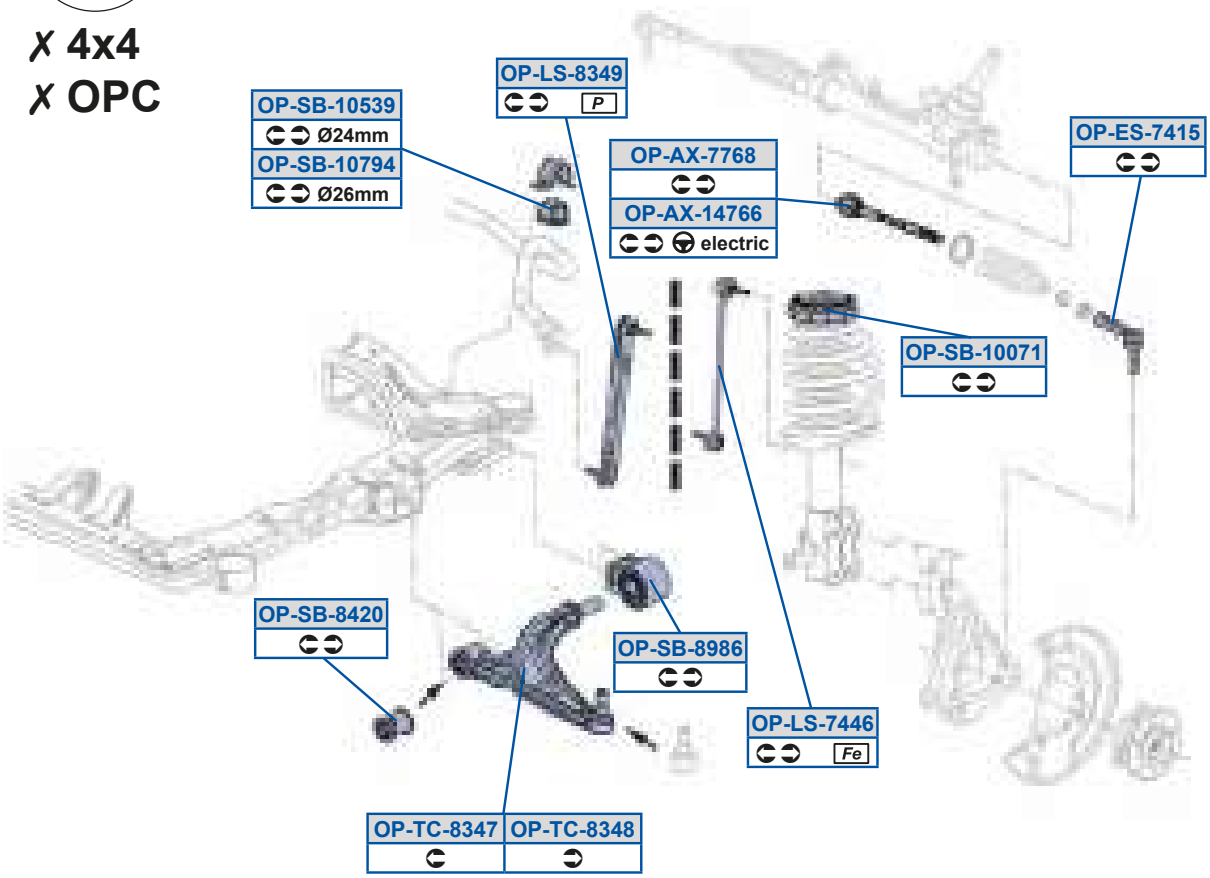

✗ 4x4
✗ OPC

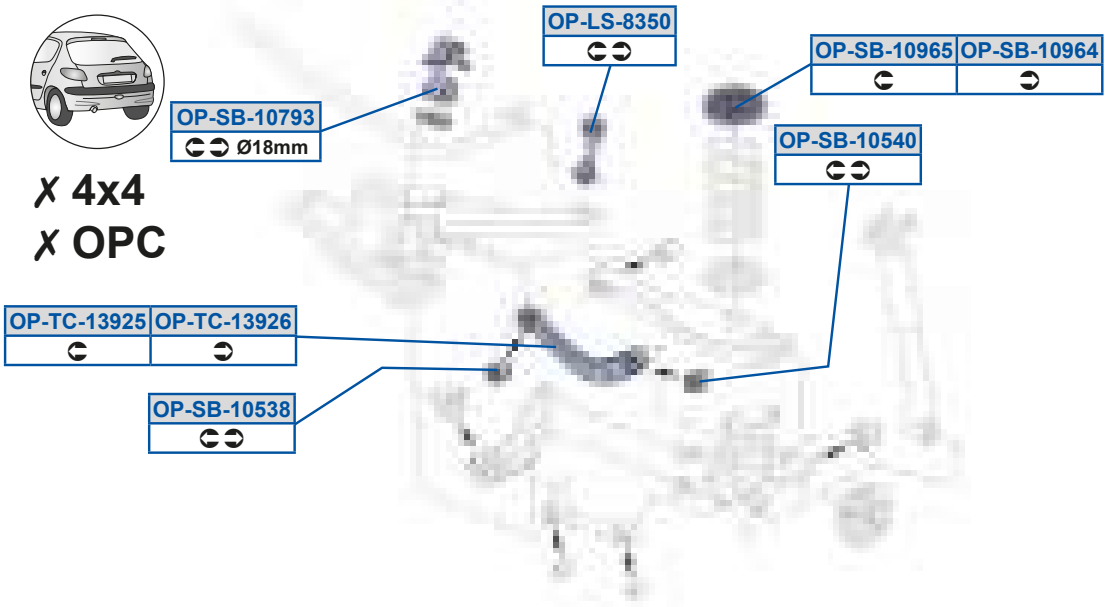

MOOG

_ a5Oi 59BEDD
8AAA9DCA38D7G8FA

_ a5dP598CAG
AC7D99

_ a5eQ59AG>C
8A98G8D938AA8FABB

_ a5Oi 5EEDF
8A9E8GGD3DD7D7A7

_ a5dP598CB8
8A9AG9993B9A7E9

_ a5eQ59AG>D
8A98G8DA38AA8FABC

_ a5Sd5EB9C
8A9E977738D7G79D

_ a5dP598EGA
BBB7G8

_ a5eQ5FABE
8A9EAD7B38AA8FFFB

_ a5Zd5EBBD
8A9CF7C93AC7D8F

_ a5dP598EGB
AC7D98

_ a5eQ5FABF
8A9EAD7C38AA8FFFC

_ a5Zd5FABG
AC7D8E

_ a5dP598GDB
8A9E8E79

_ a5Zd5FAC8
8A9F8EG93BBB7F8

_ a5dP598GDC
8A9E8E78

_ a5dP5988E9
8AC77DDA38AC7ACBF

_ a5dP5FB>8
8A98G7G73AC9FDD

_ a5dP598CAF
B9ACC8

_ a5dP5FGFD
8A9CEEFC3AC9FDF

[ScWgO O [ag Ci 8A1	8C78A 8C798		

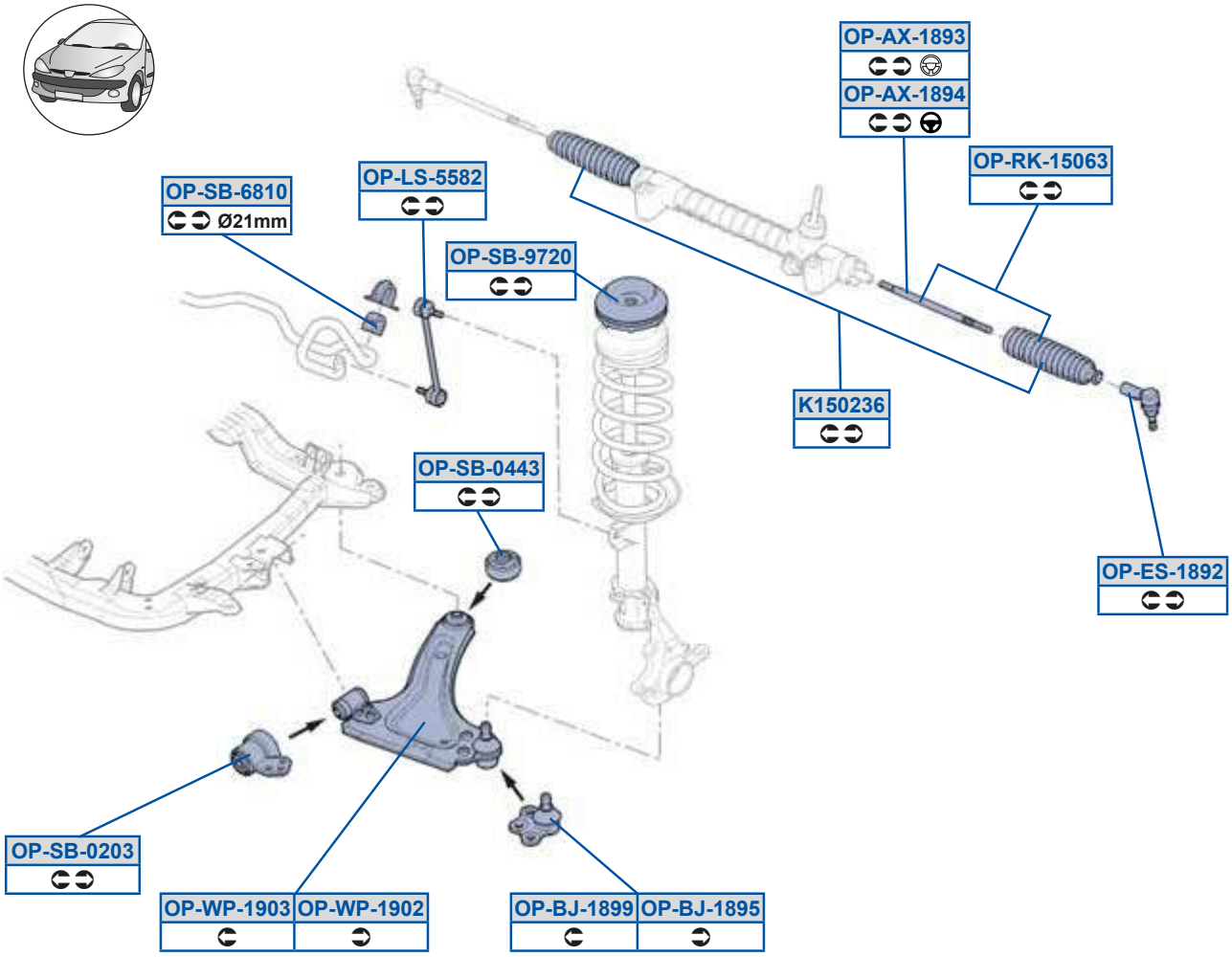

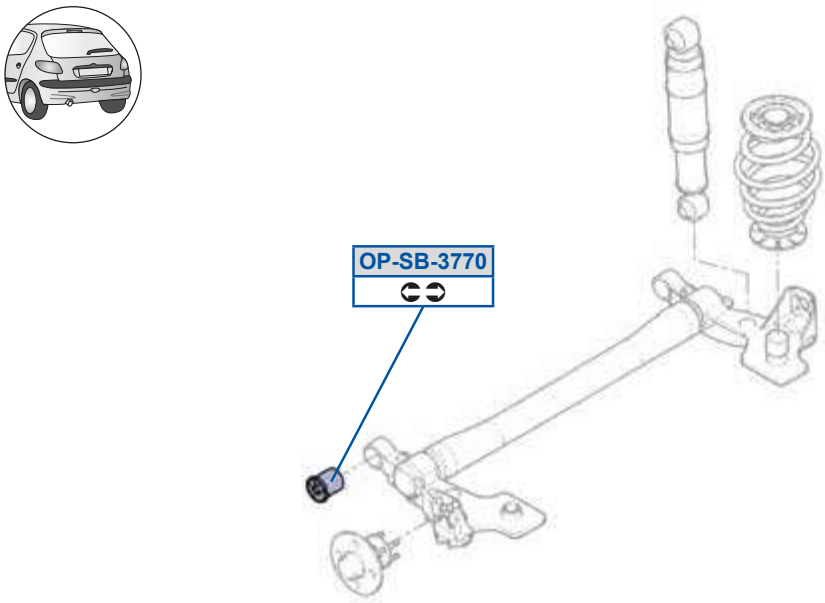

MOOG

Y9C8>AD
8D7A9B838D7G8DC

_ a5dP58>8A
AC9A7G3AC9ADD

_ a5Oi 59FGA
8D7A9AG38D7AB9F

_ a5dP58BBA
8A8AF8C839BBA787A

_ a5Oi 59FGB
8D7A78D38D7AB9G

_ a5dP5AEE8
7B79DBB3B79DBB

_ a5PX59FGC
AC97FD3CAC979D

_ a5dP5DF98
AC78D8

_ a5PX59FGG
AC97FC3CAC979C

_ a5dP5GE>8
7ABBC9C

_ a5Sd59FG>
8D7A9B738D7ABA7

_ a5h a59G8>
CAC979F

_ a5Zd5CCF>
AC7D873G7BGD88D

_ a5h a59G8A
CAC979E

_ a5c Y59C8DA
8D7A78D38D7AB9G

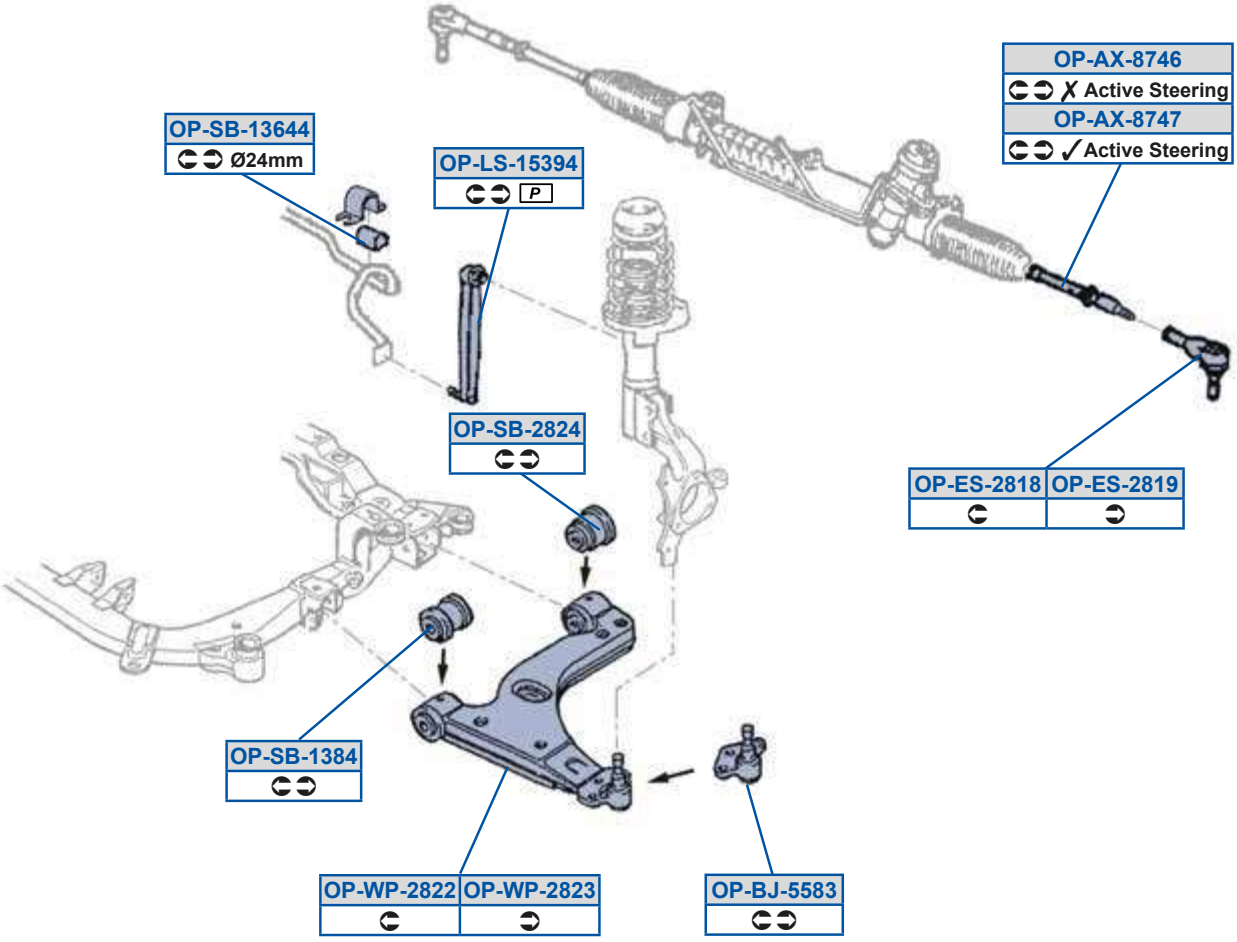
OP-AX-8746
✗ Active Steering
OP-AX-8747
✓ Active Steering
OP-SB-13644
Ø24mm
OP-LS-15394
P
OP-SB-2824
OP-ES-2818
OP-ES-2819
OP-SB-1384
OP-WP-2822
OP-WP-2823
OP-BJ-5583

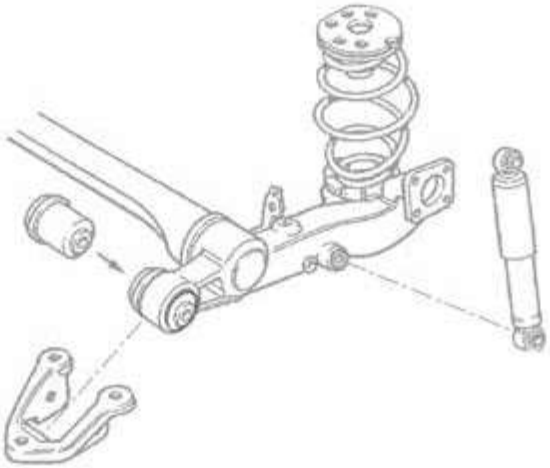

MOOG

_ a5Oi 5FEBD
8D7G777

_ a5dP5>F>B
AC9A9B

_ a5Oi 5FEBE
8D7G788

_ a5h a5>F>>
9BBCBBEE3CAC979G

_ a5PX5CCFA
7AC9F7737AC9F9G

_ a5h a5>F>A
9BBCBBEF3CAC97A7

_ a5Sd5>F9F
8D7A9CF38D7A9DD

_ a5Sd5>F9G
8D7A9CE38D7A9DE

_ a5Zd59CAGB
AC78ED3AC7D88

_ a5dP59ADBB
AC7AG8

_ a5dP59AFB
AC9ACE3AC9ADB

_ aSZ

[_YY0 7[_YY0 i 0X9A1	8D79;		

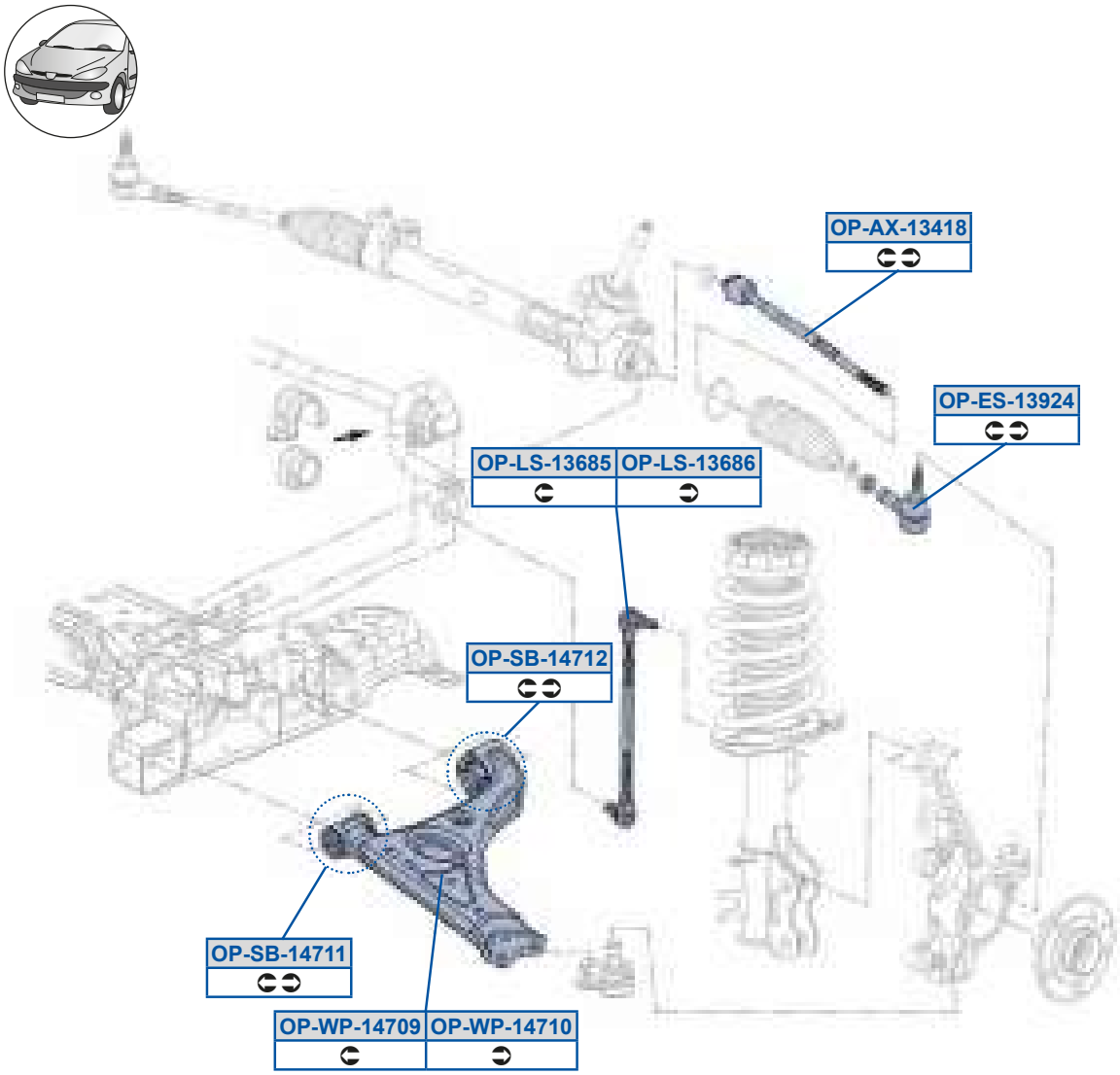

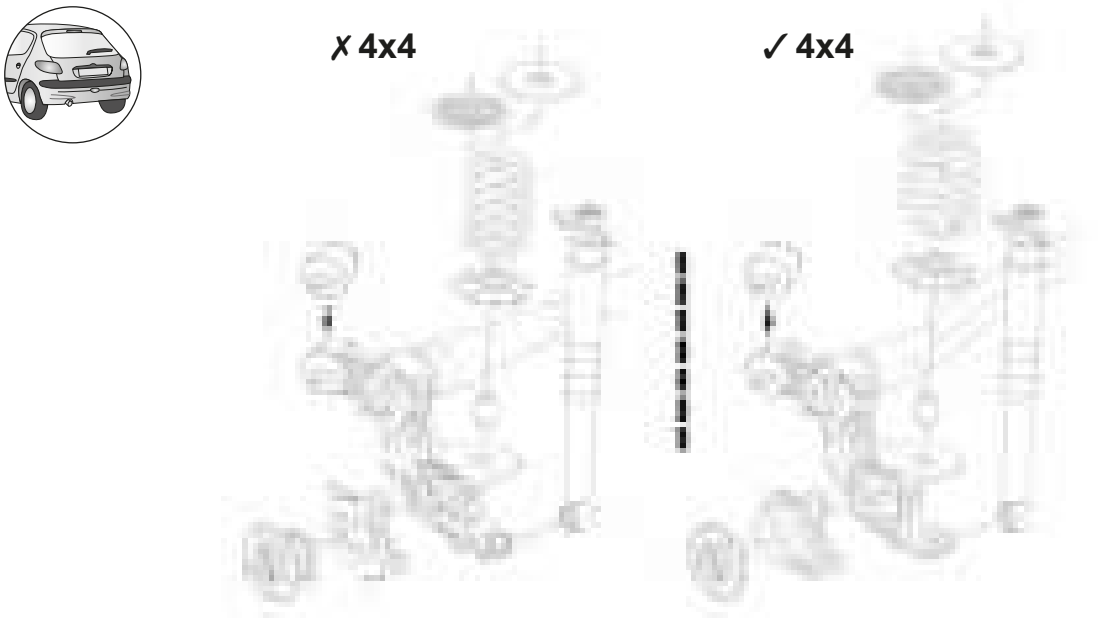

_ a5Oi 59AB9F
8D7G97938D7G98A

_ a5Sd59AG>B
8D7G97A3G97788

_ a5Zd59ADFC
AC79A83GCGB9C8G

_ a5Zd59ADFD
AC79A93GCGB9C97

_ a5dP59BE99
AC9C9A /403AC9C9B /40

_ a5dP59BE9>
AC9C9A /403AC9C9B /40

_ a5h a59BE8G
AC9C9B3AC9CC8

_ a5h a59BE98
AC9C9A3AC9CC9

_ aSZ

[_gO] _ P 0TG1	897GG	[_gO] _ Q uéO E81	8E7GF
[_gO] _ R v O E81	897GG	[_gO] _ a t y 7QÉt é O E81	8E7GF

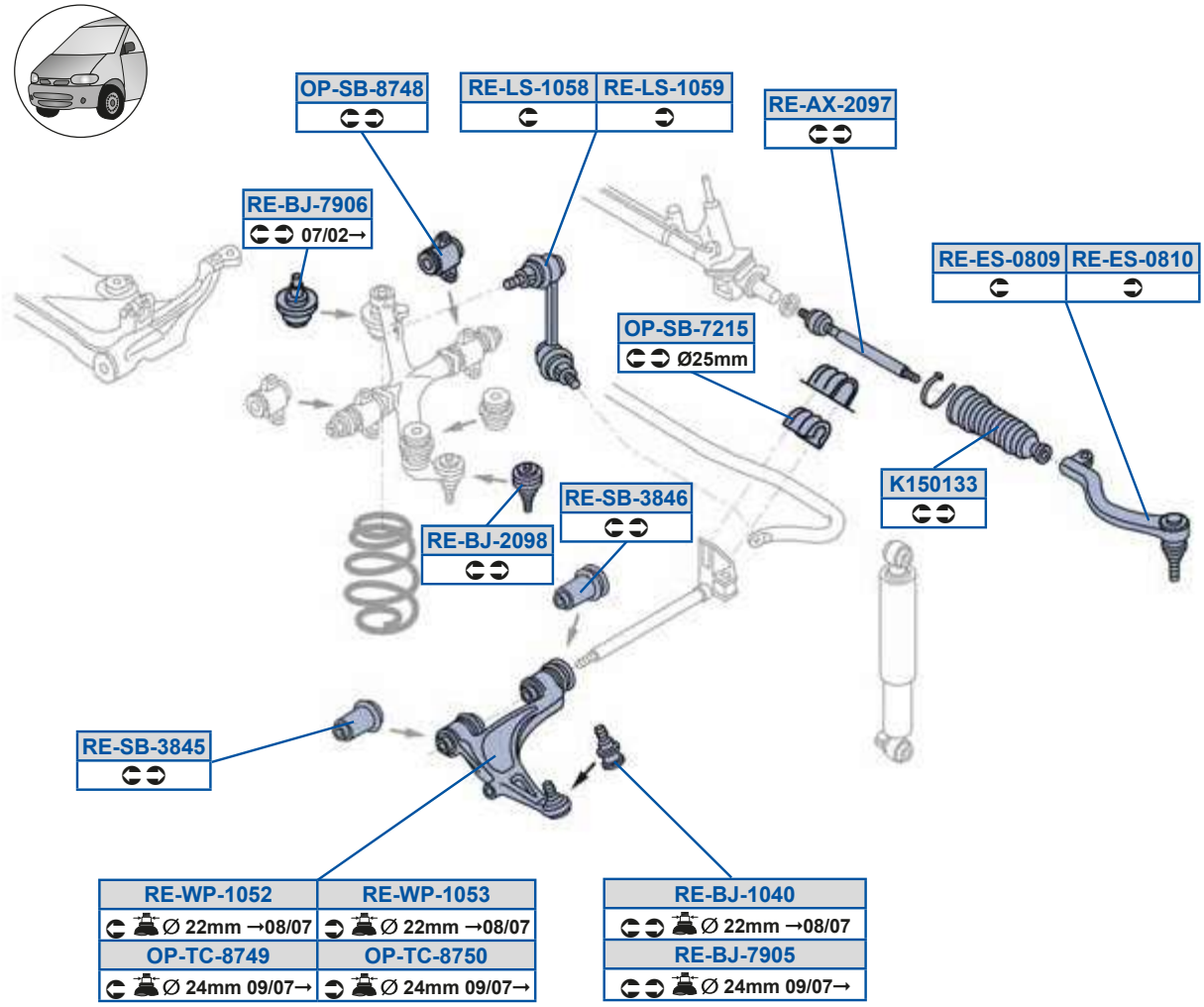

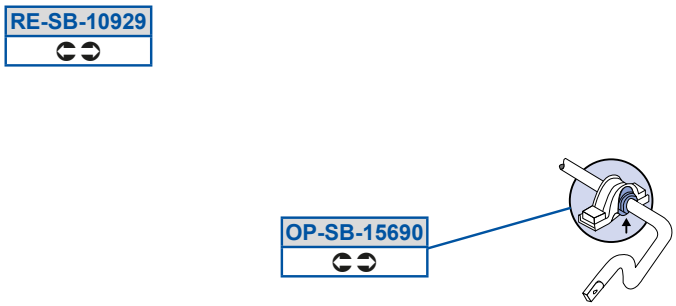

Y9C89AA
BC789D7

_ a5dP59CDG8
BB788AB

_ a5dP5E>9C
BC779883G8D7C88

_ a5dP5FEBF
BC777G8

_ a5eQ5FEBG
BB8FD9G

_ a5eQ5FEC8
BB8FDA7

c S5Oi 5>8GE
BB8FEF73BC789D8

c S5PX598B8
B8779CC3BB78G7G

c S5PX5>8GF
BC779CB3G8D7CCB

c S5PX5EG8C
BB8FDA83GA8GBFCE

c S5PX5EG8D
B788777I 00

c S5Sd58F8G
BC789D93G8D8CD9

c S5Sd58F98
BC789DA3G8D8CDA

c S5Zd598CF
BB8F8G93BC778GF

c S5Zd598CG
BB8F8GA3BC778GG

c S5dP598G>G

c S5dP5AFBC
BC777GC3CBB9A77I 00

c S5dP5AFBD
BC777GB3CBCE777I 00

c S5h a598C>
BB78FC93BB78GB7

c S5h a598CA
BB78FCA3BB78GB8

_ aSZ

[_gO] _ P P Ó D; 1	8C798	[_gO] _ P P	9; 798
[_gO] _ P a t y 7OÉt é Ó D; 1	8C798		

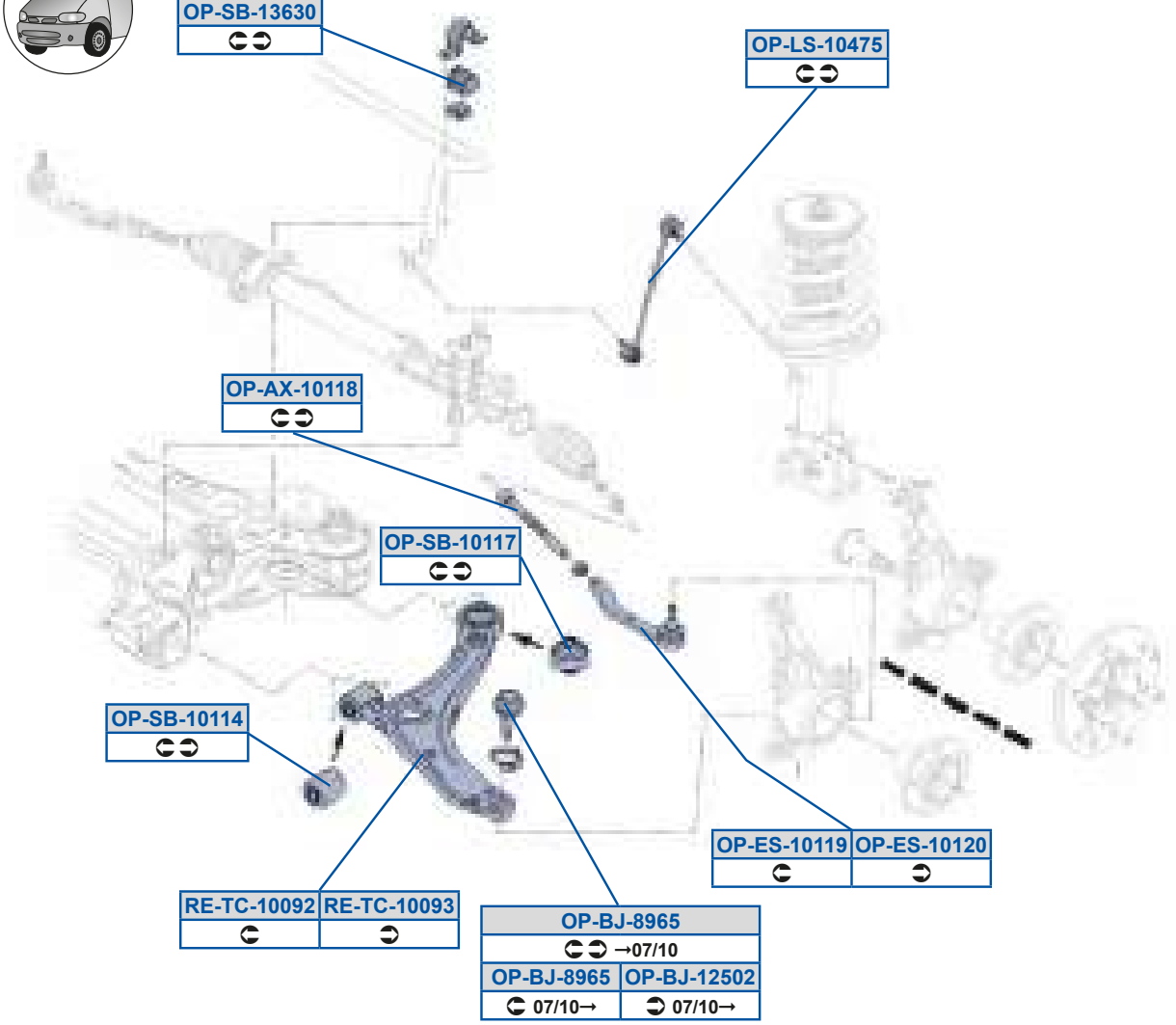

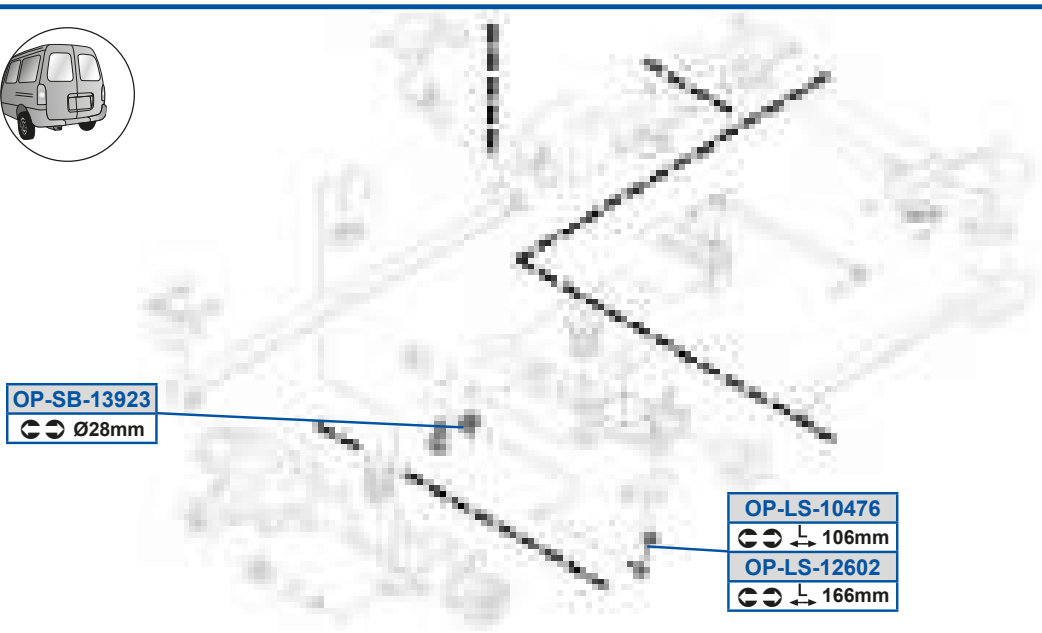

MOOG

_ a5Oi 59899F
BB977GD3BFC989AEAn

_ a5dP59899B
F977DFFFE8 /40

_ a5PX59>C8>
BB7F9C93BB8G98G

_ a5dP59899E
F977DFFFE8 /40

_ a5PX5FGDC
BB8G98G3GA8GE9AA

_ a5dP59ADA8
GA8GEA9E

_ a5Sd59899G
BB977GE3BFC97DEA7n

_ a5dP59AG>A
7BB8GA7F

_ a5Sd5989>8
BB977GF3BFC977EF7n

c S5eQ5988G>
BB8G98D3F977DFFFEC

_ a5Zd598BEC
BB8G9G8

c S5eQ5988GA
BB8G98C3F977DFFFE8

_ a5Zd598BED
BB8GA7B

_ a5Zd59>D8>
BB97GCB

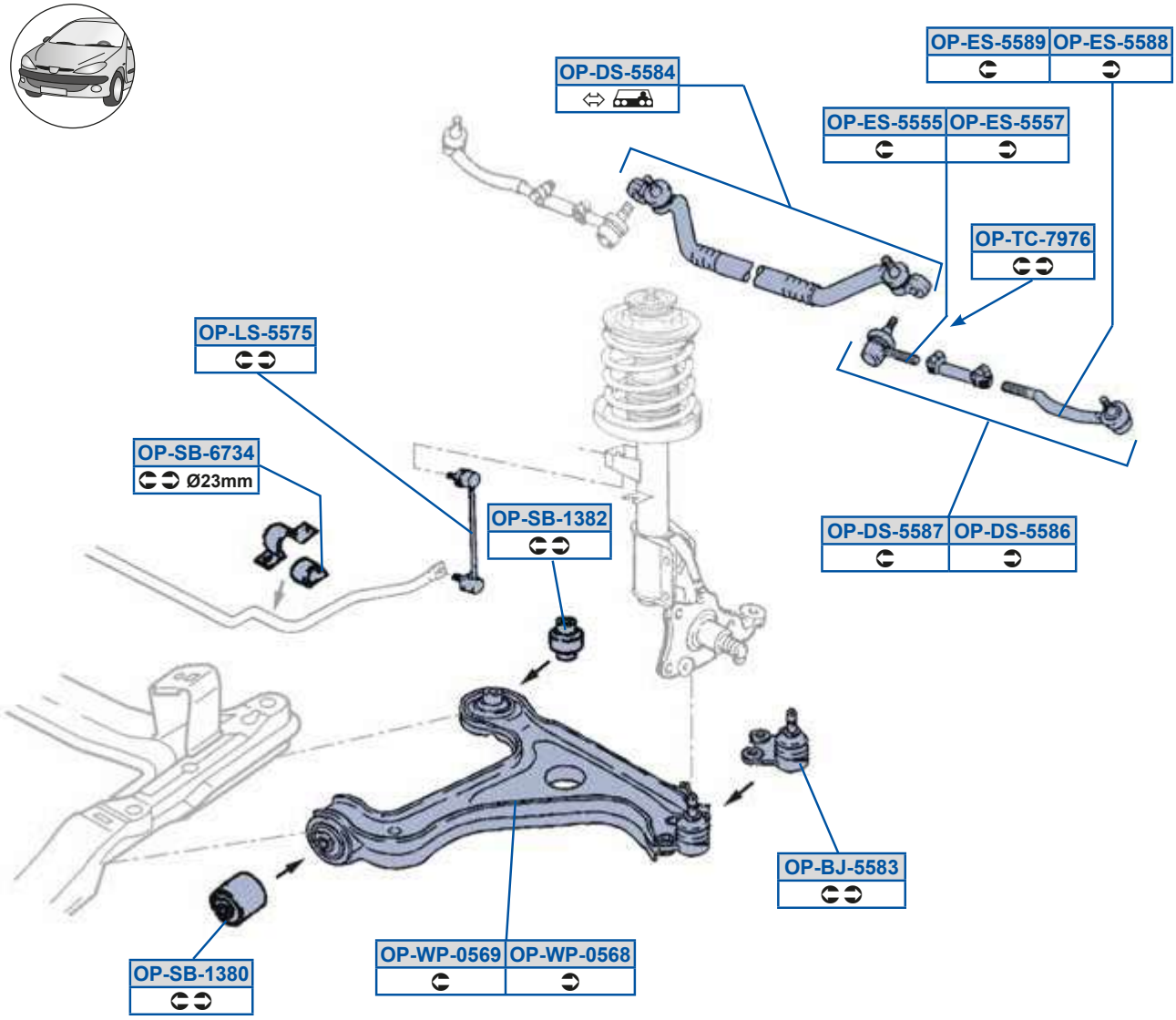
OP-DS-5584
OP-ES-5589
OP-ES-5588
OP-ES-5555
OP-ES-5557
OP-TC-7976
OP-LS-5575
OP-SB-6734
Ø23mm
OP-SB-1382
OP-DS-5587
OP-DS-5586
OP-BJ-5583
OP-SB-1380
OP-WP-0569
OP-WP-0568

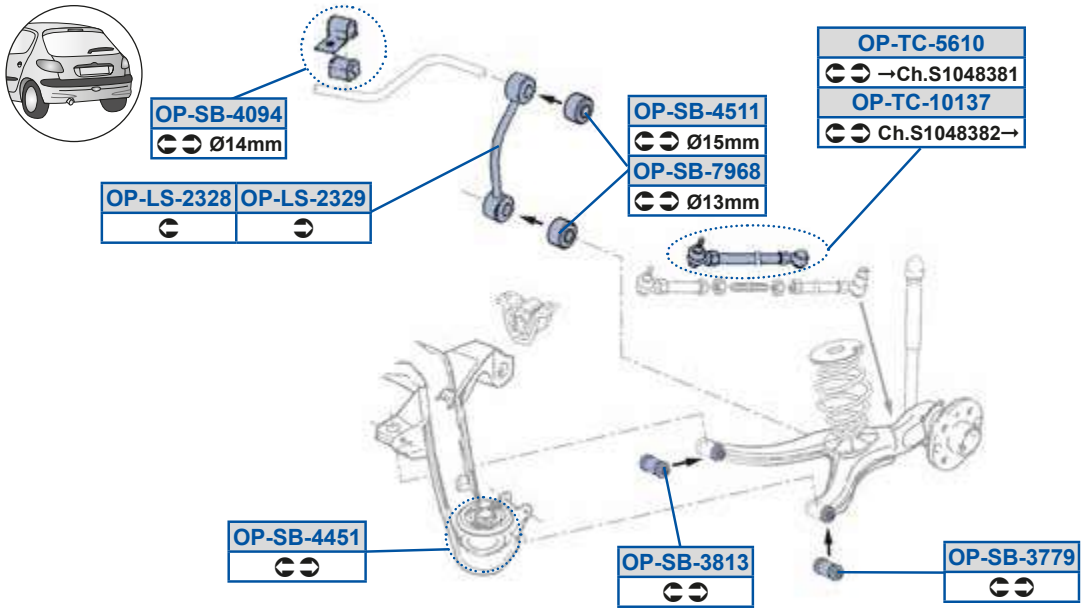
OP-SB-4094
Ø14mm
OP-TC-5610
→Ch.S1048381
OP-TC-10137
Ch.S1048382→
OP-SB-4511
Ø15mm
OP-SB-7968
Ø13mm
OP-LS-2328
OP-LS-2329
OP-SB-4451
OP-SB-3813
OP-SB-3779

MOOG

_ a5PX5CCFA
7AC9F7737AC9F9G

_ a5Zd5>A>F
BBB9FG

_ a5dP5BBC9
7B79GB93B79GB9

_ a5h a58CDG
AC979G3AC98GE

_ a5Rd5CCFB
A998DD

_ a5Zd5>A>G
BBB9FF

_ a5dP5BC99
BBBABE3G7ABAFBE

_ a5Rd5CCFD
7A998DF3A9977A

_ a5Zd5CCEC
AC7D773AC7D7C

_ a5dP5DEAB
7AC78BE3AC78BE

_ a5Rd5CCFE
7A998DG3A99779

_ a5dP59AF8
7AC9A7937AC9BCF

_ a5dP5EGDF
7BBBA9C37BBBAAD

_ a5Sd5CCCC
7A998C837A998E8

_ a5dP59AF>
7AC9A7A37AC9BCE

_ a5eQ5989AE
B9A7873B9A78G

_ a5Sd5CCCE
7A998CB37A998E9

_ a5dP5AEEG
B9AA8A3G799ABCD

_ a5eQ5CD98
7B9A78E3B9A78E

_ a5Sd5CCFF
7A998F737A9B7D7

_ a5dP5AF9A
7B9AA8C3B9AA8C

_ a5eQ5EGED
G77G9F7C3G8GCEA8

_ a5Sd5CCFG
7A998EG37A9B7CG

_ a5dP5B8GB
7BBB8CA3BBB8CA

_ a5h a58CDF
AC979F3AC98GD

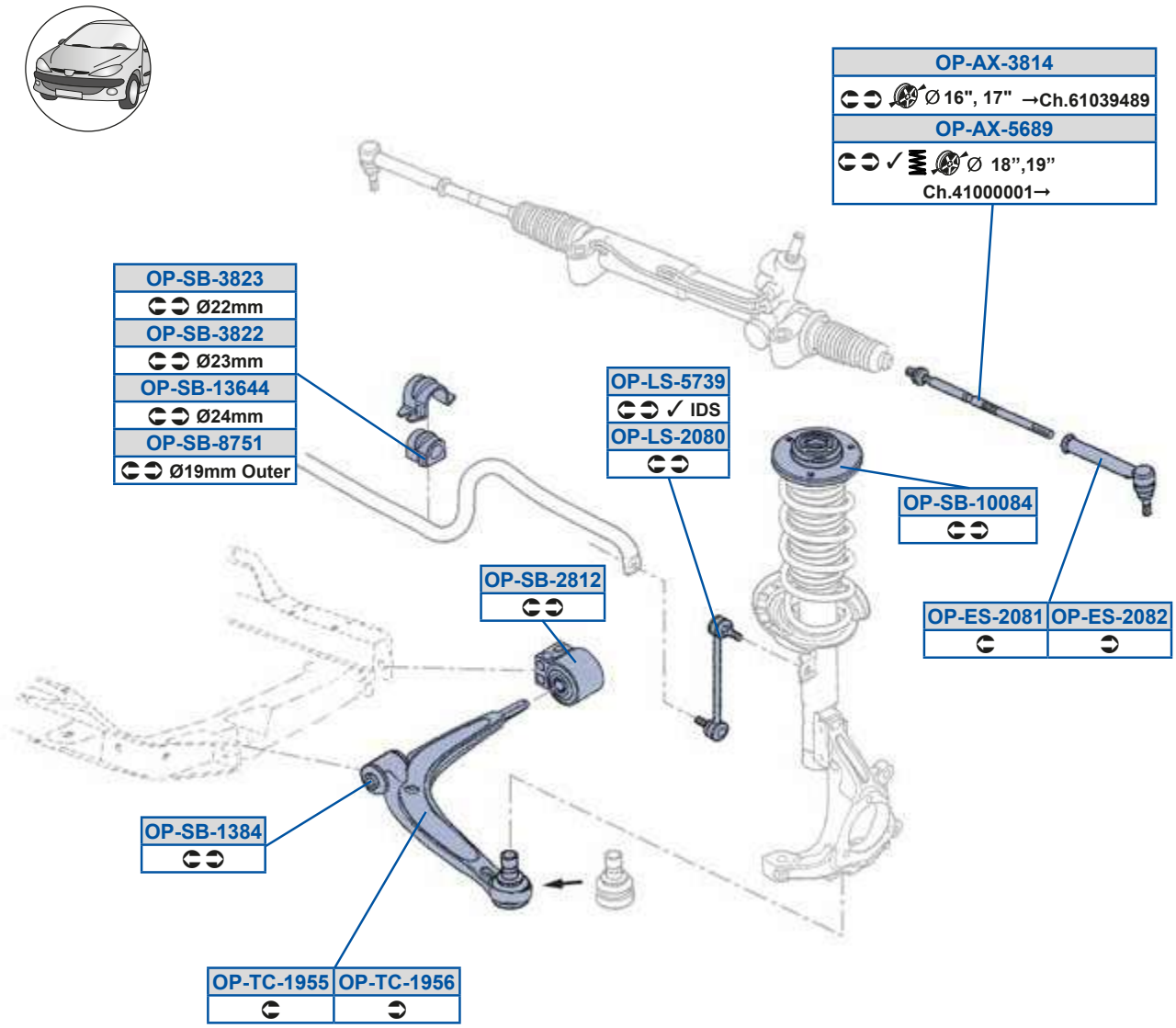
OP-AX-3814
Ø 16", 17" →Ch.61039489
OP-AX-5689
Ø 18",19"
Ch.41000001→
OP-SB-3823
Ø22mm
OP-SB-3822
Ø23mm
OP-SB-13644
Ø24mm
OP-SB-8751
Ø19mm Outer
OP-LS-5739
✓ IDS
OP-LS-2080
OP-SB-10084
OP-SB-2812
OP-ES-2081
OP-ES-2082
OP-SB-1384
OP-TC-1955
OP-TC-1956

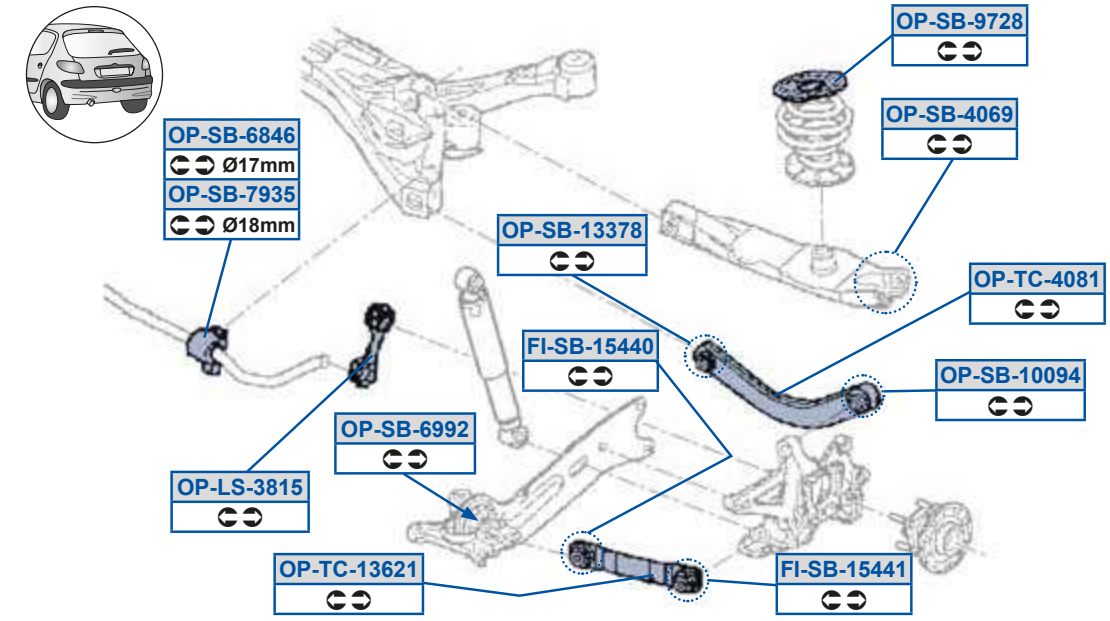
OP-SB-9728
OP-SB-4069
OP-SB-6846
Ø17mm
OP-SB-7935
Ø18mm
OP-SB-13378
OP-TC-4081
FI-SB-15440
OP-SB-10094
OP-SB-6992
OP-LS-3815
OP-TC-13621
FI-SB-15441

_ a5Oi 5AF9B
8D7A9BB38D7AAFB

_ a5dP5988GB
8AA979ED

_ a5dP5DFBD
7BBB8D73BBB8D7

_ a5eQ5B8F9
B9A77F3B9A7AA

_ a5Oi 5CDFG
8D7A9C938D7A9G7

_ a5dP59AAEF
B9A77F /40B9A7AA /40

_ a5dP5DGG>
B9AA8G

_ a5Sd5>8F9
8D7A99E3GA8E99CB

_ a5dP59ADBB
AC7AG8

_ a5dP5EGAC
9BBCEAFD

_ a5Sd5>8F>
8D7A99F3GA8E99CC

_ a5dP59AFB
AC9ACE3AC9ADB

_ a5dP5FEC9
BBB8D9

_ a5Zd5>8F8
7AC7D7A39BB8E9C8

_ a5dP5>F9>
89EFDB893AC9A8G

_ a5dP5GE>F
87ADACCD387AEGAE8

_ a5Zd5AF9C
8A87B8973BBB9EC

_ a5dP5AF>>
AC78BC3AC78D7

_ a5eQ59AD>9
9BB9FCBF3B9A7A9

_ a5Zd5CEAG
8A88DAA93AC7D89

_ a5dP5AF>A
9BB9F7793AC78BD

_ a5eQ59GCC
9BB8A78C3AC97C8

_ a5dP5988FB
ABBCAE

_ a5dP5B8DG
B9AA97

_ a5eQ59GCD
7AC97C939BB8A78D

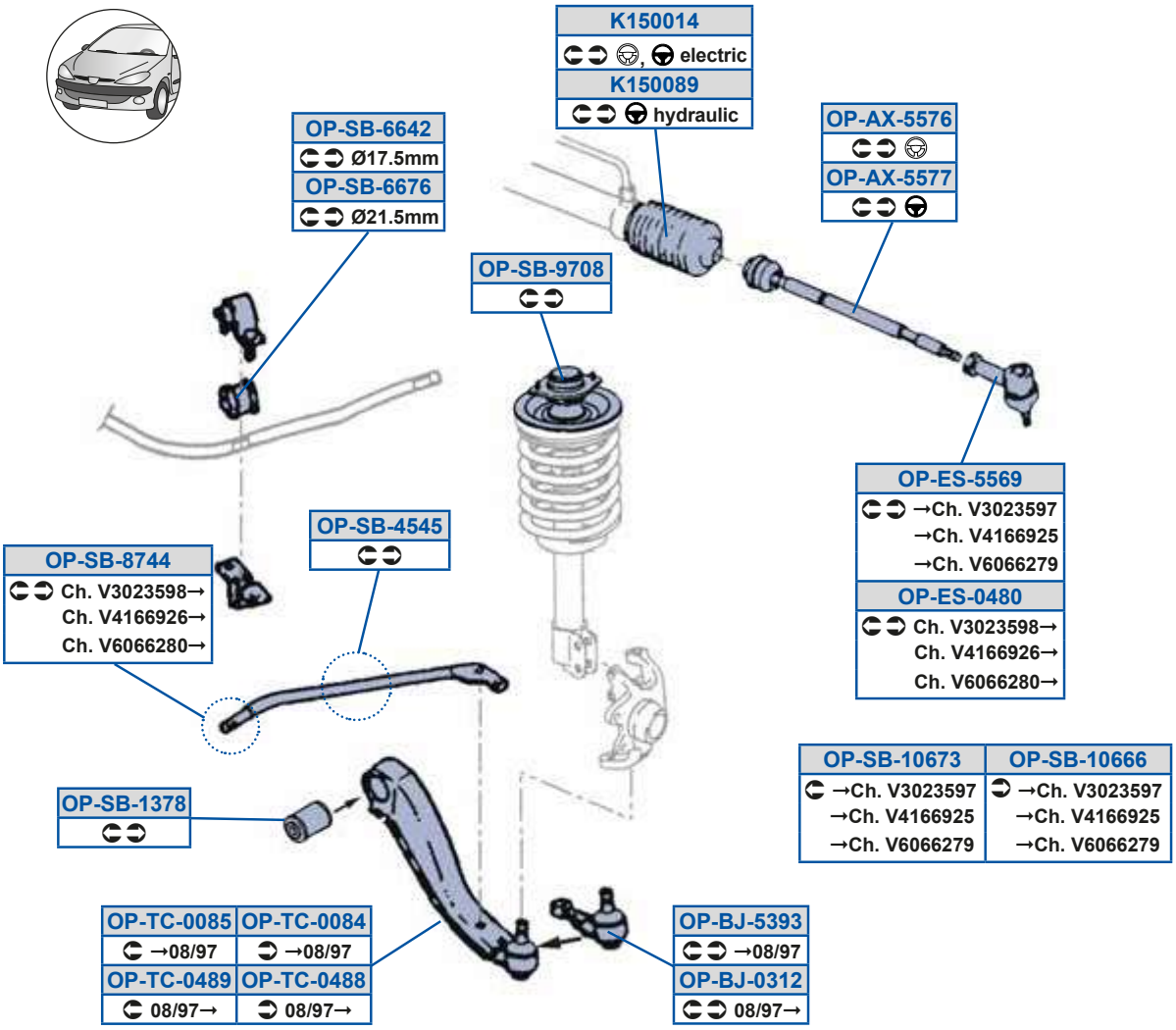
K150014
electric
K150089
hydraulic
OP-SB-6642
Ø17.5mm
OP-SB-6676
Ø21.5mm
OP-AX-5576
OP-AX-5577
OP-SB-9708
OP-ES-5569
→Ch. V3023597
→Ch. V4166925
→Ch. V6066279
OP-ES-0480
Ch. V3023598→
Ch. V4166926→
Ch. V6066280→
OP-SB-4545
OP-SB-8744
Ch. V3023598→
Ch. V4166926→
Ch. V6066280→
OP-SB-10673
→Ch. V3023597
→Ch. V4166925
→Ch. V6066279
OP-SB-10666
→Ch. V3023597
→Ch. V4166925
→Ch. V6066279
OP-SB-1378
OP-TC-0085
→08/97
OP-TC-0084
→08/97
OP-TC-0489
08/97→
OP-TC-0488
08/97→
OP-BJ-5393
→08/97
OP-BJ-0312
08/97→

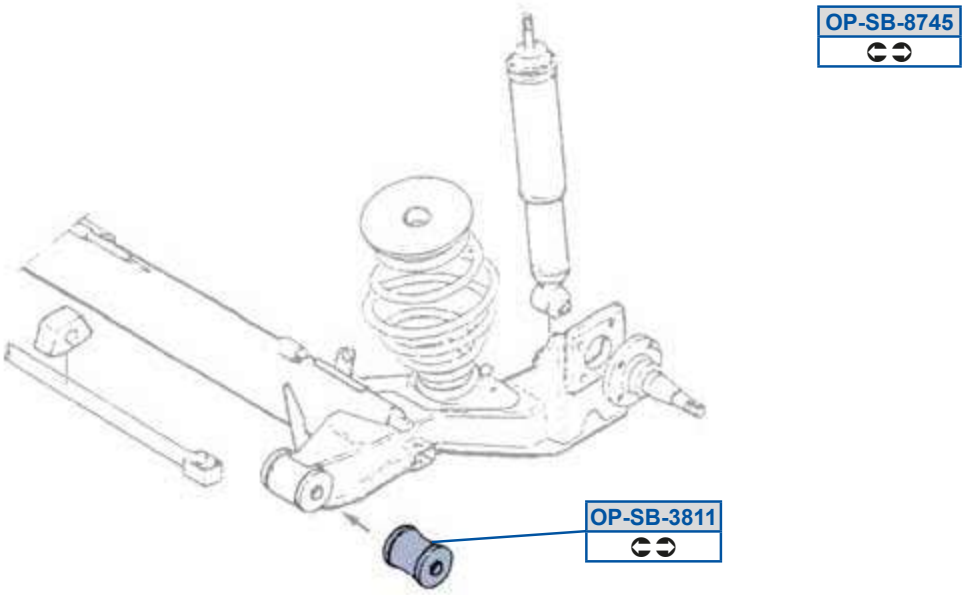
OP-SB-8745
OP-SB-3811

MOOG

Y9C889B
7G79F9D39D78779G

_ a5dP598DDD
ACA9F73G7BBC878

_ a5dP5FEBC
9BBBAF8C3CB79DAD

Y9C88FG
8D7G7FE39D7A99FD

_ a5dP598DEA
ACA9F83G7BBC877

_ a5dP5GE8F
887B97883A89C7A

_ a5Oi 5CCED
7A998CC38D7ABCA

_ a5dP59AEF
7AC9A783AC9A78

_ a5eQ588FB
AC97793AC98F9

_ a5Oi 5CCEE
7A998CF3A998CF

_ a5dP5AF99
B79DBA

_ a5eQ588FC
AC977A3AC98F8

_ a5PX58A9>
8D7A979

_ a5dP5BCBC
7ACACD83ACACD8

_ a5eQ58BFF
AC97893CAC9789

_ a5PX5CAGA
8D7A89F38D7A8D8

_ a5dP5DDB>
AC787G3G78DFD79

_ a5eQ58BFG
AC97883CAC9788

_ a5Sd58BF8
7A9B7DD38D7ABCC

_ a5dP5DDED
7AC789E3AC789E

_ a5Sd5CCDG
7A9B7C738D7A77G

_ a5dP5FEBB
ADACD93G7CAG7CE

eWcO e é e Ci 8B1	8D78B		

ezx r e z e 0-88B5L1

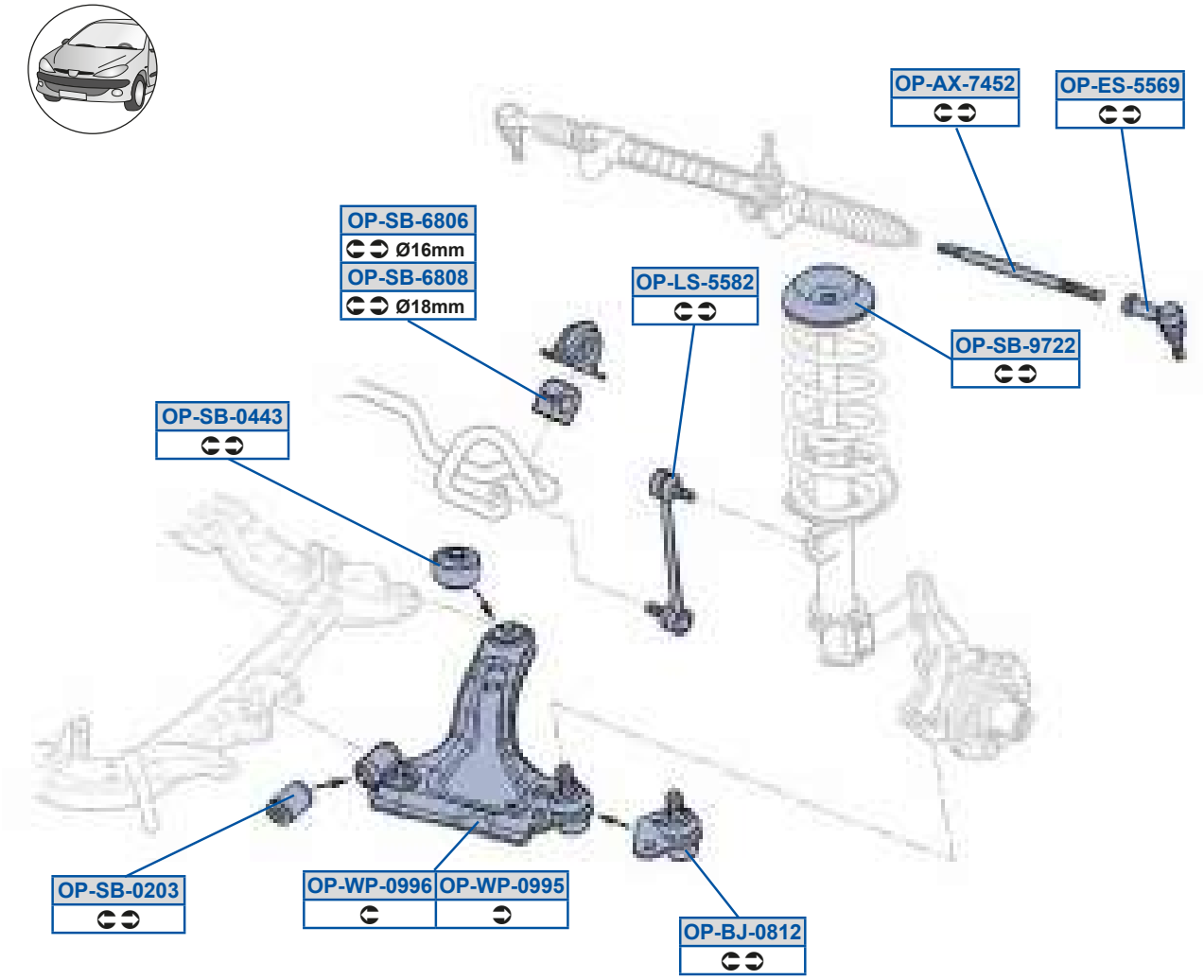

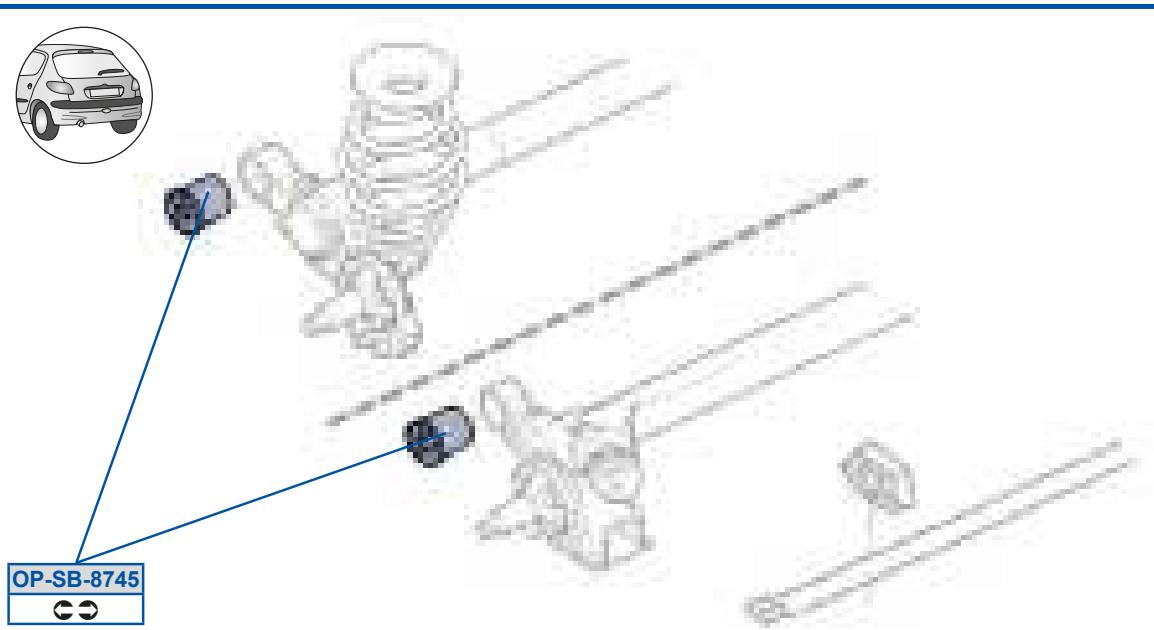

MOOG

_ a5Oi 5EBC>
8D7A78F38D7AFBA

_ a5dP5FEBC
9BBBAF8C3CB79DAD

_ a5PX58F9>
7AC9F7A3AC9F7A

_ a5dP5GE>>
ABBC9A3G7BDFCCB

_ a5Sd5CCDG
7A9B7C738D7A77G

_ a5h a58GGC
7AC97B937AC97DA

_ a5Zd5CCF>
AC7D873G7BGD88D

_ a5h a58GGD
AC97B83AC97BC

_ a5dP58>8A
AC9A7G3AC9ADD

_ a5dP58BBA
8A8AF8C839BBA787A

_ a5dP5DF8D
7AC78A73AC78A7

_ a5dP5DF8F
7AC78AF3AC78AF

_ aSZ

gSQec0 P 0KGD1	8G7GC 8B78;	gSQec0 P S t x 0KGD1	997GD 8E78A
gSQec0 P Vt vÉut v 0KGD1	987GC 8E78A		

gvt r P 0GGC5L >88>1

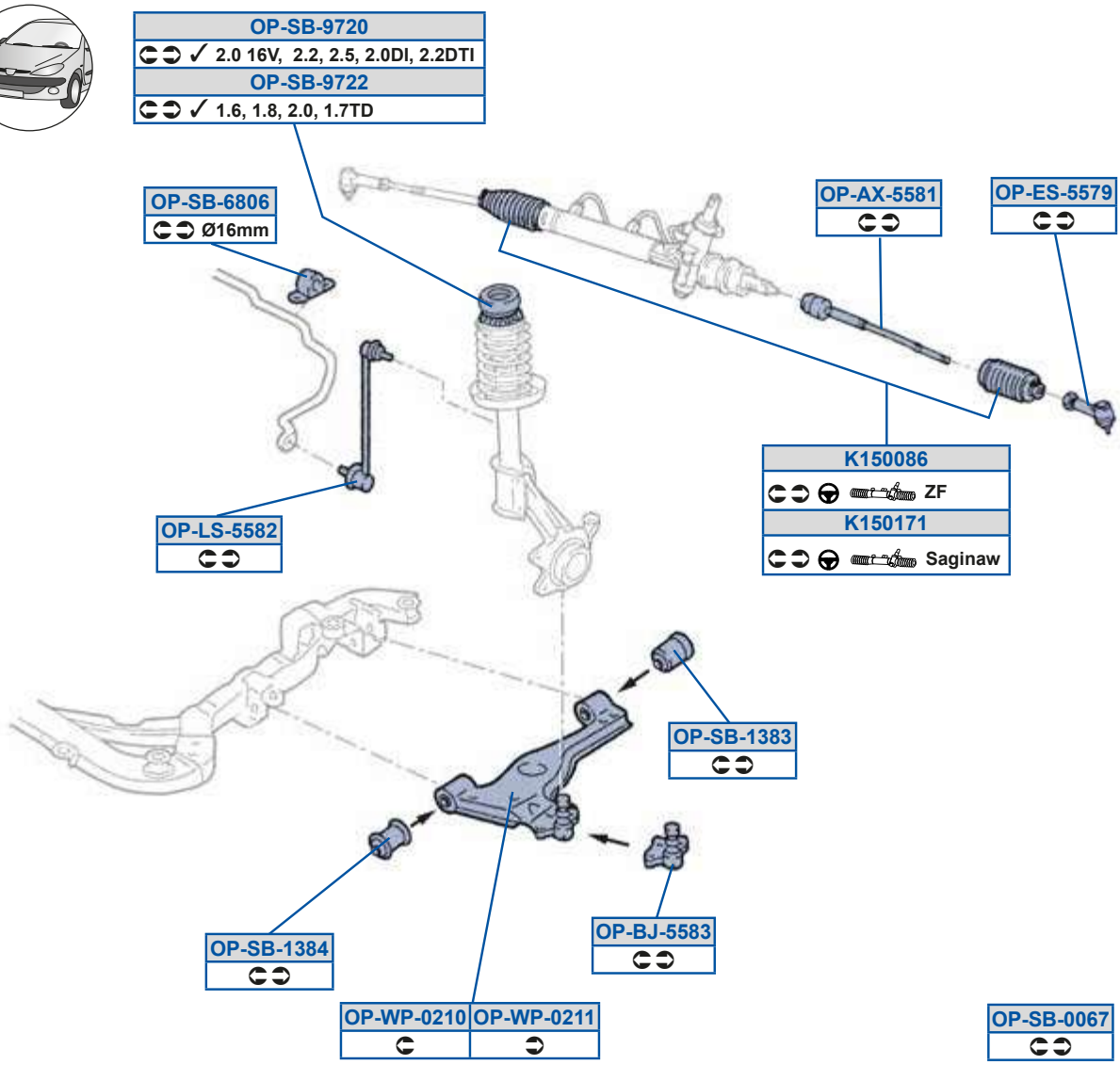

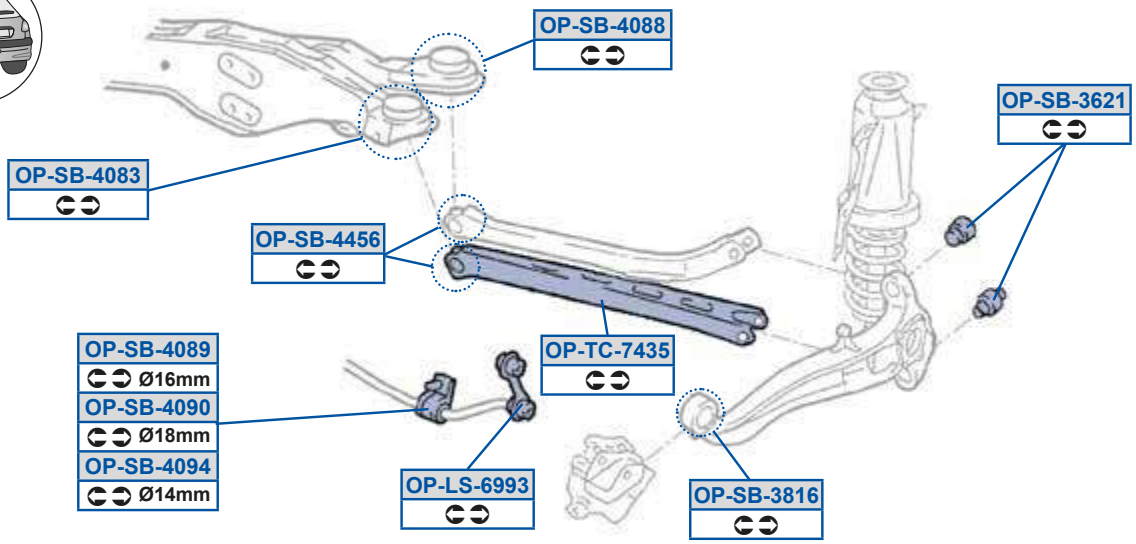

_ aSZ

MOOG

Y9C88FD
8D7G7GC3G7C89EEF

_ a5dP59AFA
AC99ACF3AC9ACF

_ a5dP5B8GB
7BBB8CA3BBB8CA

Y9C89E9
8D7G7GD39D7CC997

_ a5dP59AFB
AC9ACE3AC9ADB

_ a5dP5BBCD
7B9AA8D3B9AA8D

_ a5Oi 5CCF9
8D7A8GF38D7A8GG

_ a5dP5AD>9
7B9A8983B9A898

_ a5dP5DF8D
7AC78A73AC78A7

_ a5PX5CCFA
7AC9F7737AC9F9G

_ a5dP5AF9D
7B9AA7937B9AA8F

_ a5dP5GE>8
7ABBC9C

_ a5Sd5CCEG
7A9B7DA38D7A9FD

_ a5dP5B8FA
CB79DA7

_ a5dP5GE>>
ABBC9A3G7BDFCCB

_ a5Zd5CCF>
AC7D873G7BGD88D

_ a5dP5B8FF
CB79DA8

_ a5eQ5EBAC
BDB79A3G7CAFBBB

_ a5Zd5DGGA
BBB9G83G7BGDE88

_ a5dP5B8FG
7BBB9773BBB977

_ a5h a58>98
CAC977C

_ a5dP588DE
A799F7

_ a5dP5B8G8
BBB978

_ a5h a58>99
7AC97A73AC97A7

_ aSZ

gSQec0 Q Ol 8; 1	8B78;	gSQec0 Q S t x Ol 8; 1	9878A
gSQec0 Q Ued Ol 8; 1	8F78;		

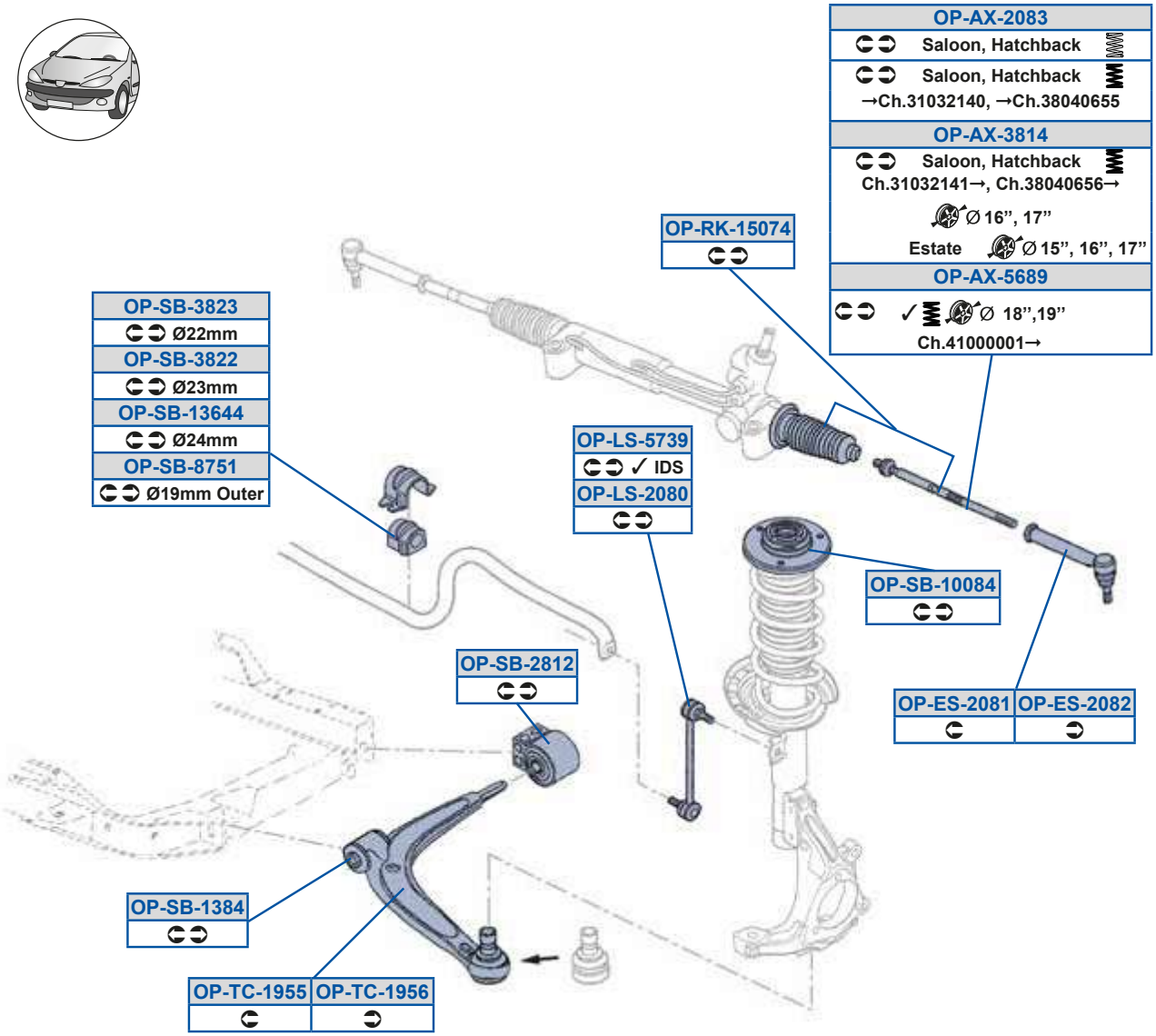

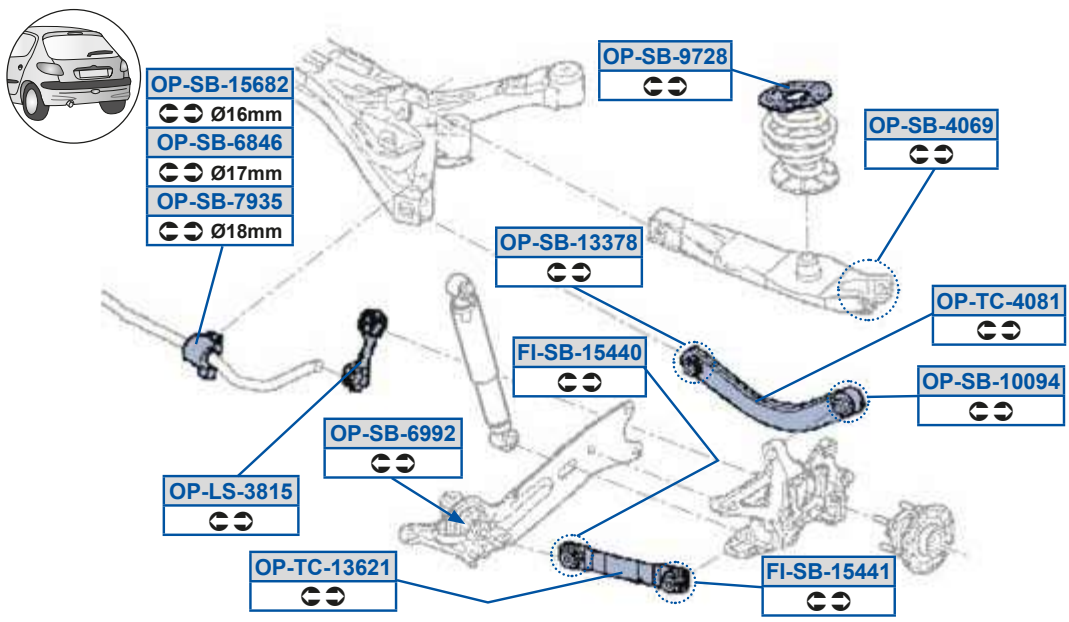

MOOG

TV5dP59CBB8
B9A7A9 /40

_ a5Zd5AF9C
8A87B8973BBB9EC

_ a5dP59CDF>
8A8A8GDA3BB8DA

_ a5dP5FEC9
BBB8D9

TV5dP59CBB9
B9A7A9 /40

_ a5Zd5CEAG
8A88DAA93AC7D89

_ a5dP5>F9>
89EFDB893AC9A8G

_ a5dP5GE>F
87ADACCD387AEGAE8

_ a5Oi 5>8FA
8D7A99G38D7AAC8

_ a5cY59C8EB
8D7A99G38D7AAC8

_ a5dP5AF>>
AC78BC3AC78D7

_ a5eQ59AD>9
9BB9FCBF3B9A7A9

_ a5Oi 5AF9B
8D7A9BB38D7AAFB

_ a5dP5988FB
ABBCAE

_ a5dP5AF>A
9BB9F7793AC78BD

_ a5eQ59GCC
9BB8A78C3AC97C8

_ a5Oi 5CDFG
8D7A9C938D7A9G7

_ a5dP5988GB
8AA979ED

_ a5dP5B8DG
B9AA97

_ a5eQ59GCD
7AC97C939BB8A78D

_ a5Sd5>8F9
8D7A99E3GA8E99CB

_ a5dP59AAEF
B9A77F /40B9A7AA /40

_ a5dP5DFBD
7BBB8D73BBB8D7

_ a5eQ5B8F9
B9A77F3B9A7AA

_ a5Sd5>8F>
8D7A99F3GA8E99CC

_ a5dP59ADBB
AC7AG8

_ a5dP5DGG>
B9AA8G

_ a5Zd5>8F8
7AC7D7A39BB8E9C8

_ a5dP59AFB
AC9ACE3AC9ADB

_ a5dP5EGAC
9BBCEAFD

_ aSZ

gWJOc_ P 0TE1	8F789	gWJOc_ Q uéD FA1	8F789
gWJOc_ a t y 7QÉt é D FA1	8978D		

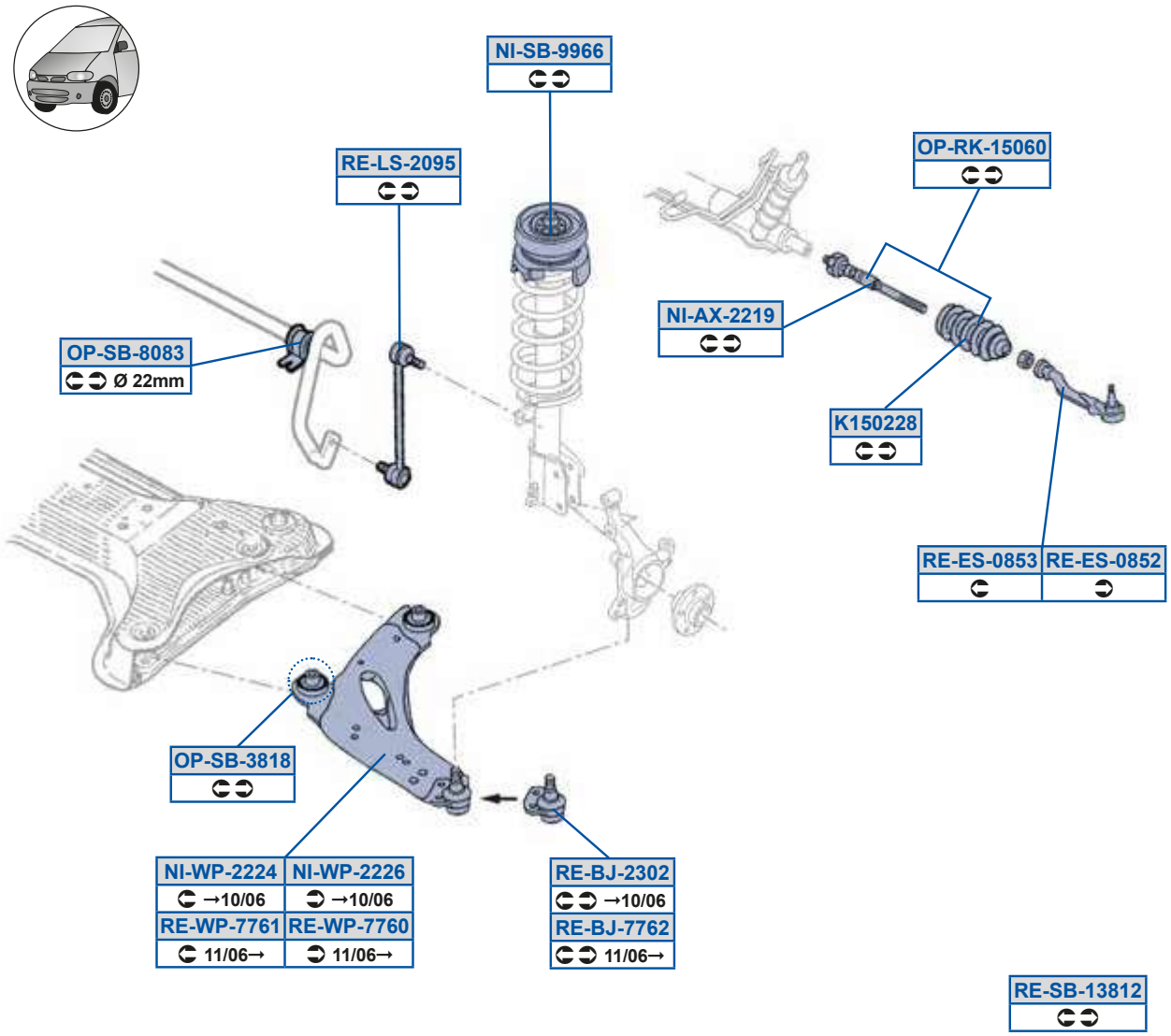

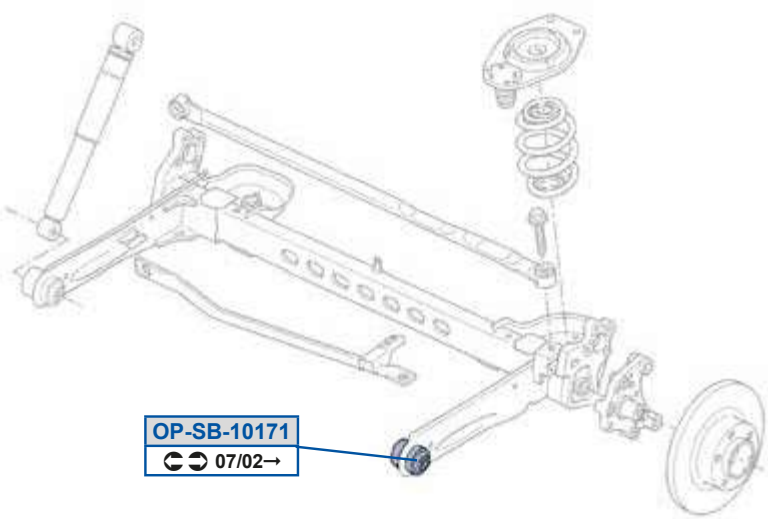

MOOG

Y9C8>>F
BB7FBED

_ a5dP5F8FA
8A887B8F3B79GC9

cS5h a5EED9
BB7FGCF3BB89GAB

] V5Oi 5>>9G
BB7FBEB3G88D77AE

cS5PX5>A8>
BB8G7EC

] V5dP5GGDD
CBA9777I 003EE7897EBG8

cS5PX5EED>
BBA8FDG

] V5h a5>>>B
BB7FGCF3BB89GAB

cS5Sd58FC>
BB7FC883BBCA7C9

] V5h a5>>>D
BB7FGCG3BB89GAD

cS5Sd58FCA
BB7FC873BBCA7C8

_ a5cY59C8D8
BB7FBEB3G88D77AE

cS5Zd5>8GC
BB7FG7B3BB8EGEA

_ a5dP5989E9
BB89G7E3BB8E898

cS5dP59AF9>
F977D9DGDC

_ a5dP5AF9F
F9777BGD9B

cS5h a5EED8
BB8E8EF3BB8F99D

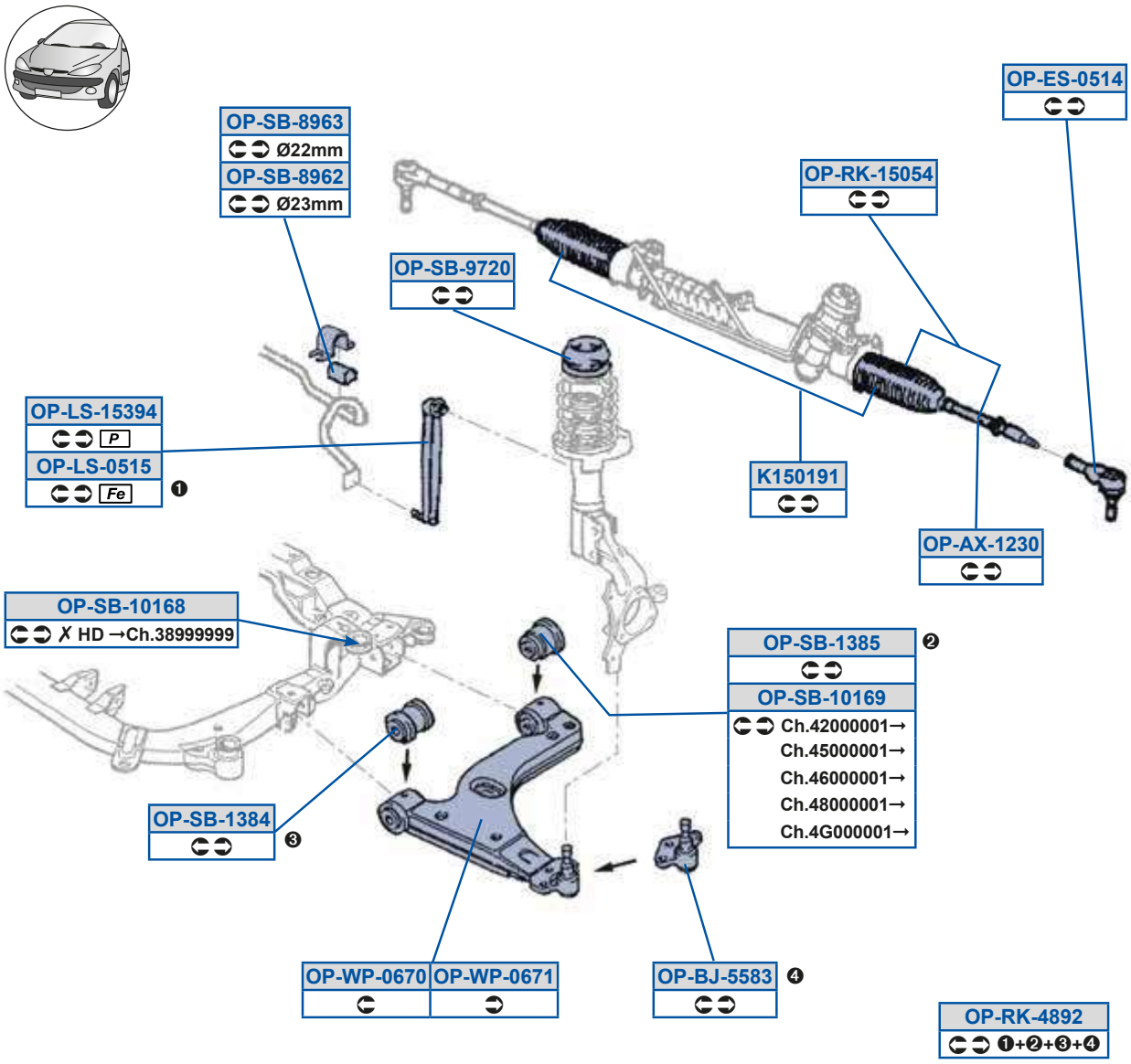
OP-ES-0514
OP-SB-8963
Ø22mm
OP-SB-8962
Ø23mm
OP-RK-15054
OP-SB-9720
OP-LS-15394
P
OP-LS-0515
Fe
❶
K150191
OP-AX-1230
OP-SB-10168
✗ HD →Ch.38999999
OP-SB-1385
❷
OP-SB-10169
Ch.42000001→
Ch.45000001→
Ch.46000001→
Ch.48000001→
Ch.4G000001→
OP-SB-1384
❸
OP-WP-0670
OP-WP-0671
OP-BJ-5583
❹
OP-RK-4892
❶+❷+❸+❹

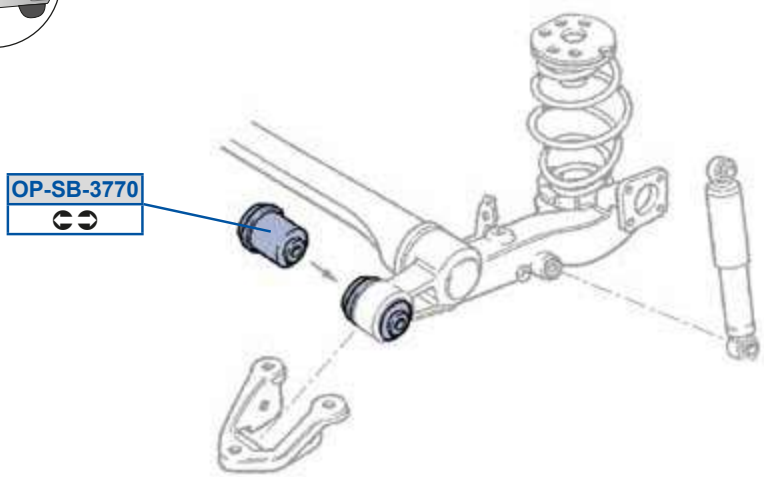
OP-SB-3770

MOOG

Y9C89G9
8D7G87G39D7CG9GC

_ a5dP5989DF
A799EC3A799G7

_ a5h a58DE8
CAC978D

_ a5Oi 59>A8
8D7A98A38D7A98D

_ a5dP5989DG
A797DE

_ a5h a58DE9
CAC978E

_ a5PX5CCFA
7AC9F7737AC9F9G

_ a5dP59AFB
AC9ACE3AC9ADB

_ a5Sd58C9B
8D7A98B38D7A98C

_ a5dP59AFC
7AC9ADC3AC9ADC

_ a5Zd58C9C
AC7D883AC7D8B

_ a5dP5AEE8
7B79DBB3B79DBB

_ a5Zd59CAGB
AC78ED3AC7D88

_ a5dP5FGD>
AC77GA

_ a5c Y59C8CB
8D7A98A38D7A98D

_ a5dP5FGDA
AC78B7

_ a5c Y5BFG>

_ a5dP5GE>8
7ABBC9C

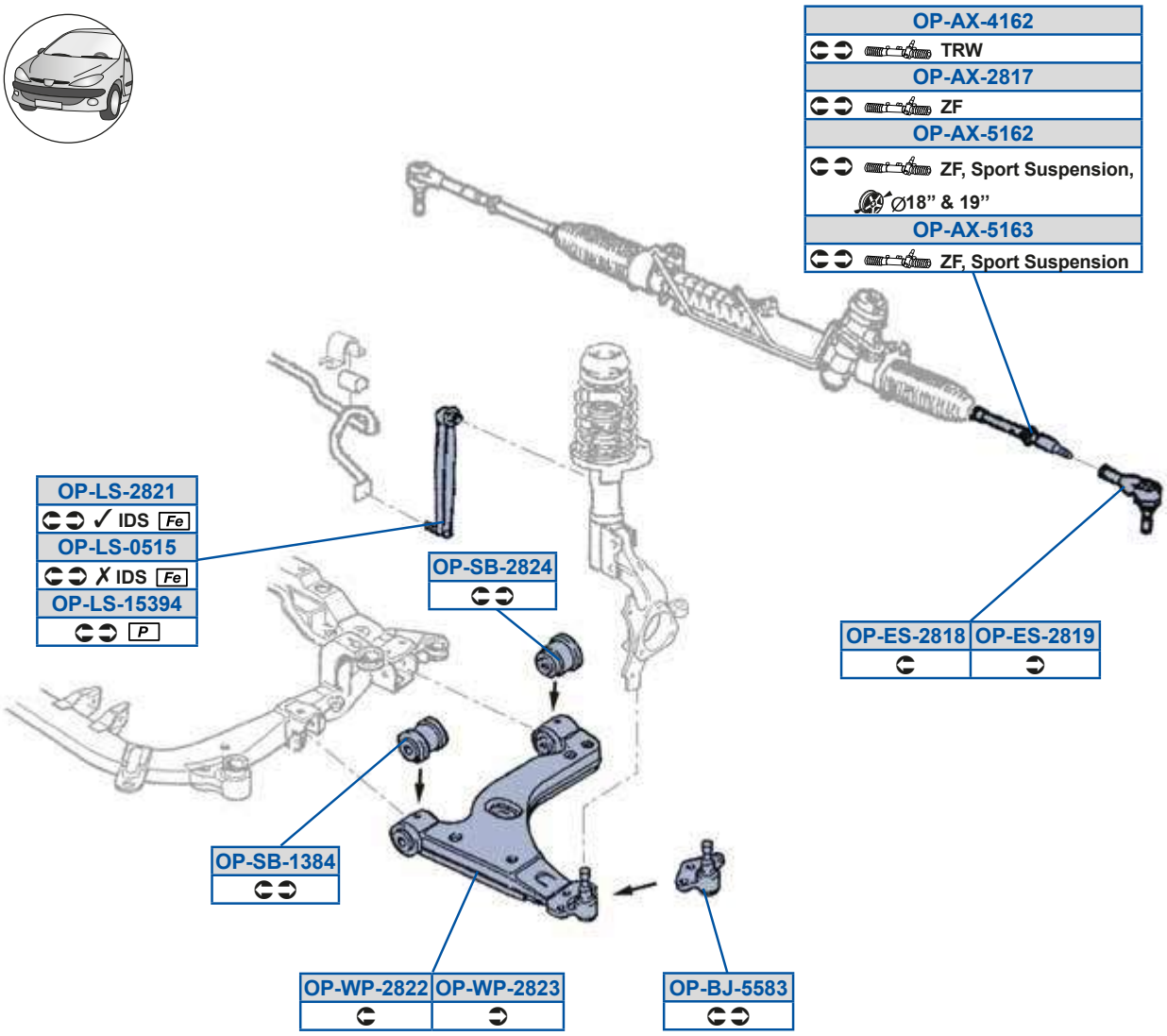
OP-AX-4162
TRW
OP-AX-2817
ZF
OP-AX-5162
ZF, Sport Suspension,
Ø18" & 19"
OP-AX-5163
ZF, Sport Suspension
OP-LS-2821
✓ IDS Fe
OP-LS-0515
✗ IDS Fe
OP-LS-15394
P
OP-SB-2824
OP-ES-2818
OP-ES-2819
OP-SB-1384
OP-WP-2822
OP-WP-2823
OP-BJ-5583

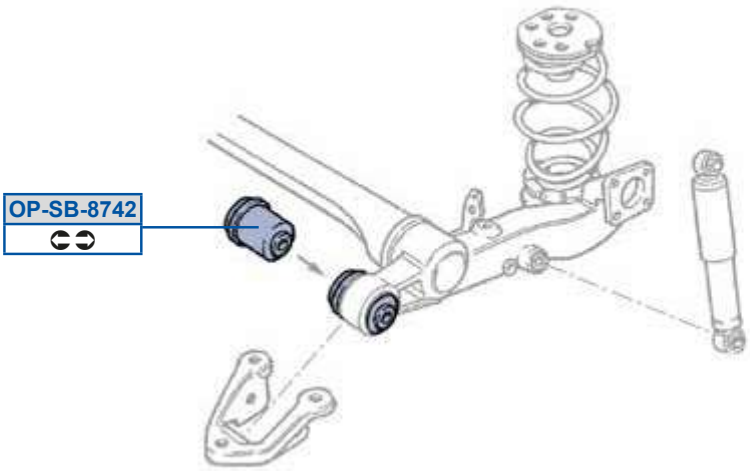
OP-SB-8742

_ a5Oi 5>F9E
8D7A9DB38D7AACE

_ a5Zd59CAGB
AC78ED3AC7D88

_ a5Oi 5B9D>
8D7A9FE38D7AA7A

_ a5Zd5>F>9
9BBD8ACA3AC7D8A

_ a5Oi 5C9D>
8D7A9DC38D7A9DF

_ a5dP59AFB
AC9ACE3AC9ADB

_ a5Oi 5C9DA
8D7A9DC38D7AACF

_ a5dP5>F>B
AC9A9B

_ a5PX5CCFA
7AC9F7737AC9F9G

_ a5dP5FEB>
8A887B8F38A9DE98C

_ a5Sd5>F9F
8D7A9CF38D7A9DD

_ a5h a5>F>>
9BBCBBEE3CAC979G

_ a5Sd5>F9G
8D7A9CE38D7A9DE

_ a5h a5>F>A
9BBCBBEF3CAC97A7

_ a5Zd58C9C
AC7D883AC7D8B

_ aSZ

I OTWO Q 0a9; 1	98799	I OTWO e_f cSc Q 0a9; 1	8979C

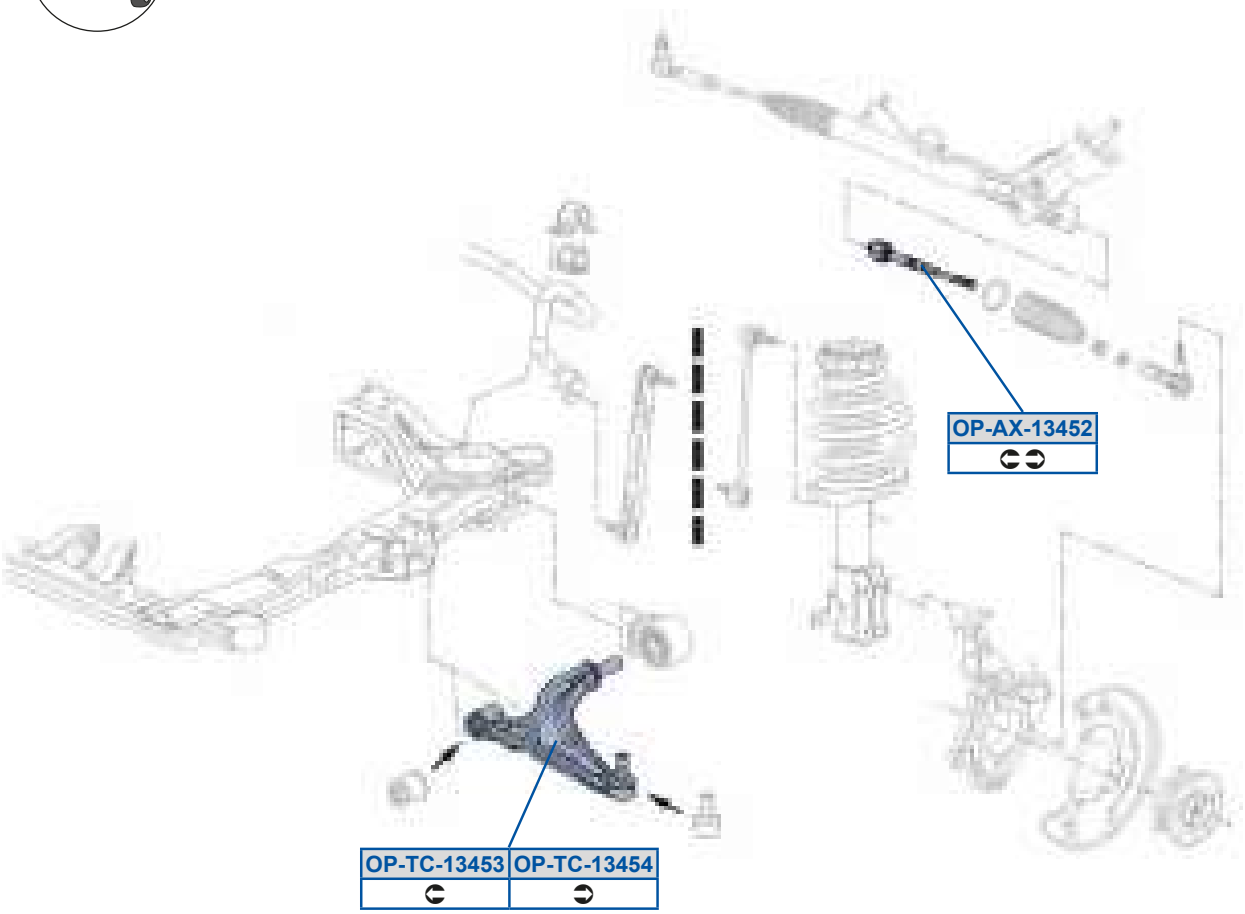

_ a 5Oi 59ABC>
8D7G8FB

_ a 5e Q59ABCA
AC9C7G3AC9CBG

_ a 5e Q59ABCB
AC9C873AC9CC7

98D W09049Q1	8F7G9 8B7GD	98D WW091	8B7GD 8E78B
98D gt 09r 1	8F7G9 8A789		

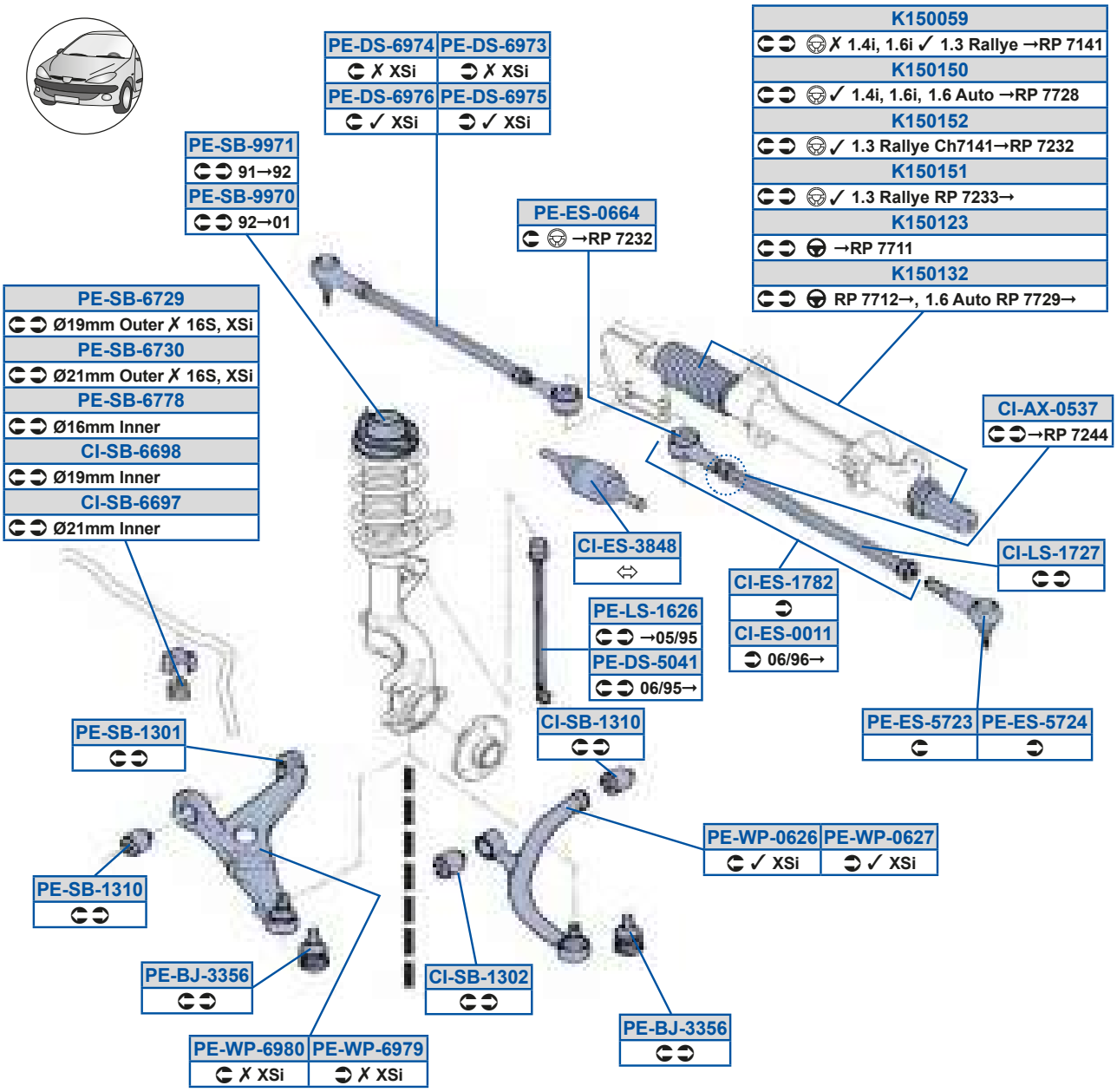

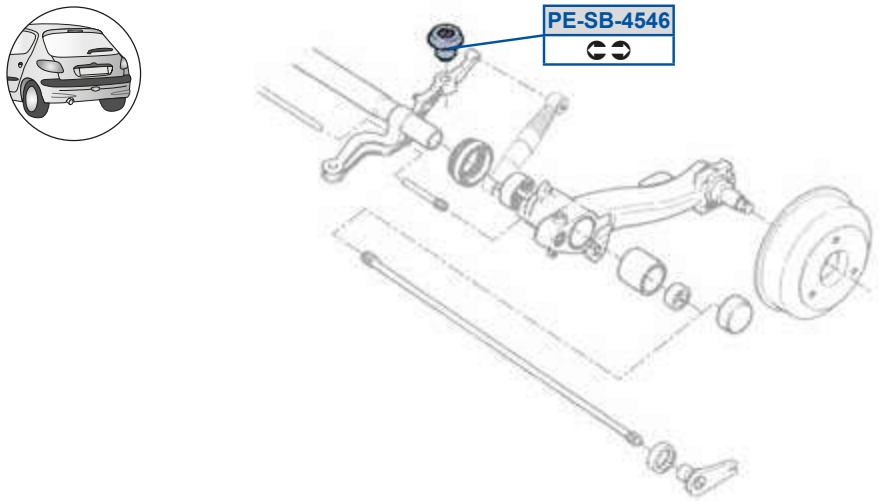

QW6Oi 58CAE
AF8EAB

QW6dP5DDGF
C7GBCD

aS5Rd5DGEC
AF89FF

aS5dP5DE>G
C7GBCG

QW6Sd58899
AF8EAD

Y9C88CG
B7DDA93B7DDAB

aS5Rd5DGED
AF89FE

aS5dP5DEA8
C7GBD7

QW6Sd59EF>
AF8EAC

Y9C89A>
EE787AFFB73GBC87EDEF7

aS5Sd58DDB
AF8EAA3GBE877GBDC

aS5dP5DEEF
C7GBED

QW6Sd5AFBF
AF8EBE

Y9C89C8
B7DDBD3GBC87EDEF7

aS5Sd5CE>A
AE8EB83AF8E8B

aS5dP5GGE8
C7AF8C

QW6Zd59E>E
AF89O7

aS5PX5AACD
8D8BBAG9F73ADB7AD

aS5Sd5CE>B
AF8E8D3AF8EA8

aS5h a58D>D
AC97F73AC97G9

QW6dP59A8>
AC9AC93AC9ADB

aS5Rd5C8B9
C7FEB73GD8EEFADF7

aS5dP59A89
AC9AC83GD87DBEB

aS5h a58D>E
AC97F83AC97GA

QW6dP59A98
AC9ACA3GD7C7AAF

aS5Rd5DGEA
AF89FD

aS5dP59A98
AC9AC7

aS5h a5DGEG
AC97EG3GCDCFGEG

QW6dP5DDGE
C7GBCE

aS5Rd5DGEB
AF89FC

aS5dP5BCBD
C8A8DA

aS5h a5DGF8
AC97EF3GCDCFGEF

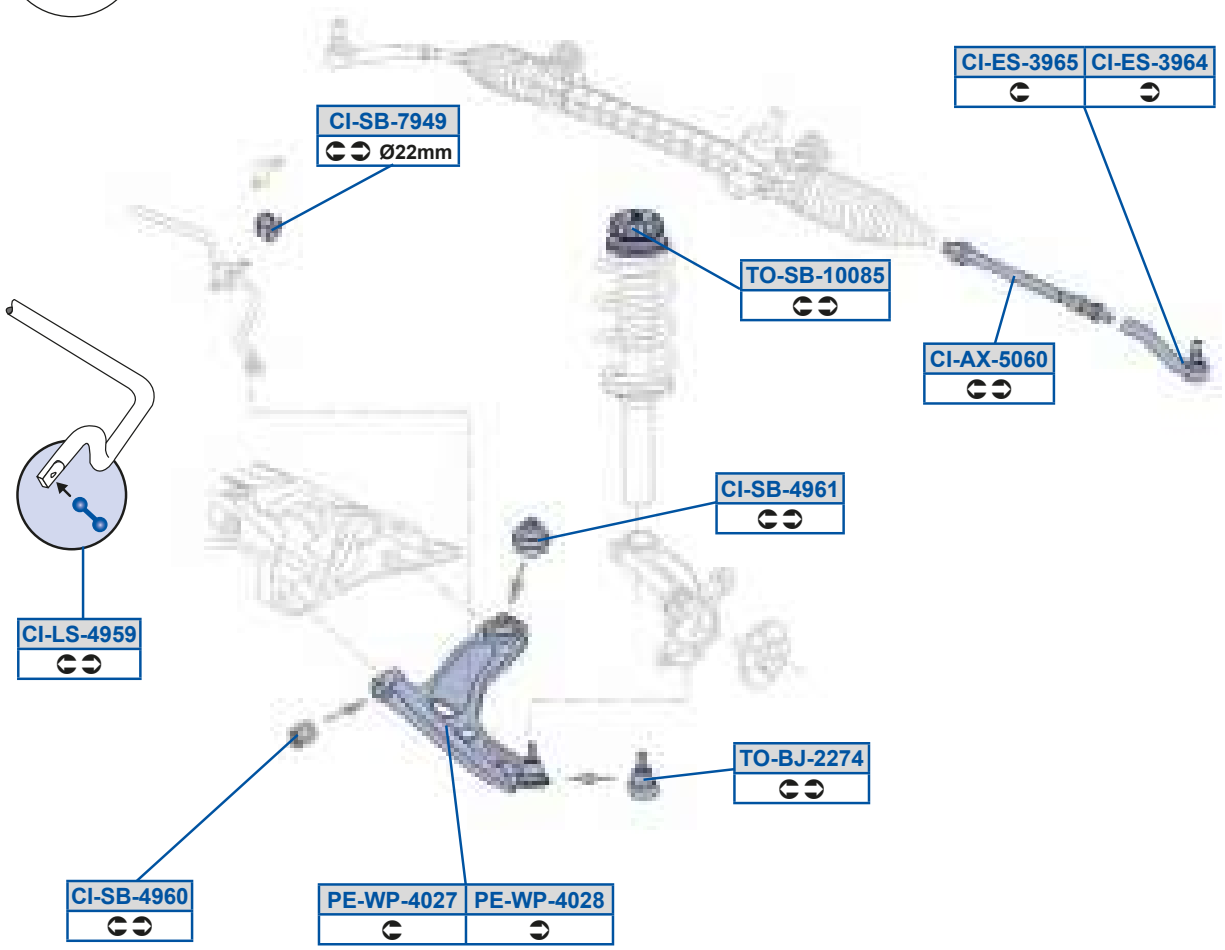
CI-ES-3965
CI-ES-3964
CI-SB-7949
Ø22mm
TO-SB-10085
CI-AX-5060
CI-SB-4961
CI-LS-4959
TO-BJ-2274
CI-SB-4960
PE-WP-4027
PE-WP-4028

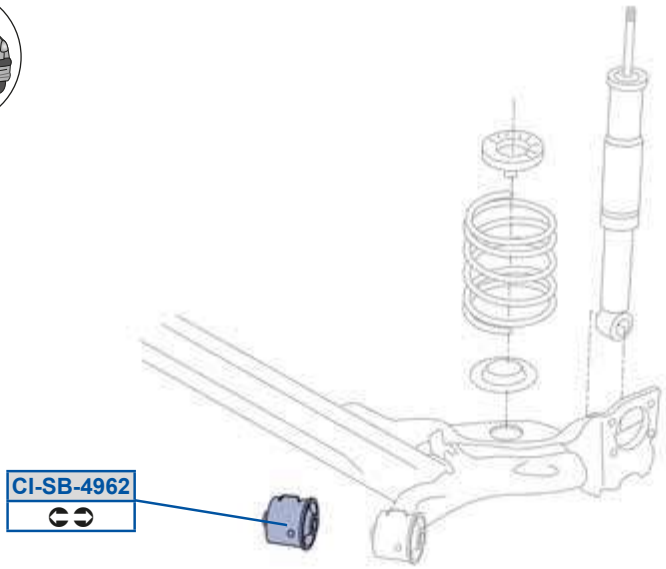
CI-SB-4962

QV5Oi 5C8D8
B778AA

QV5Sd5AGDB
AF8EDB

QV5Sd5AGDC
AF8EDA

QV5Zd5BGCG
C7G887

QV5dP5BGD8
AC97I 9 /403AC98ZA /40

QV5dP5BGD9
AC97I 9 /403AC98ZA /40

QV5dP5BGD>
C8A8 QG

QV5dP5EGBG
C7GBOF

aS5h a5B8>E
AC97I 9

aS5h a5B8>F
AC98ZA

e_5PX5>>EB
BAA7FCG7AC3BF7DFCG7AC /40

e_5dP5988FC
C7ACCE

aSf US_ e

; 8C P	8; 7FA 8C7GE	; 8C P 7; 8C gt	8A7GB 8C7GE
; 8C WŒB907Q1	8; 7FA 987FE	; 8C WQ x áu x ŒB9P4; 8R1	8B7FD 9; 7GB
; 8C WQ 807Q1	897FE 8G7GF		

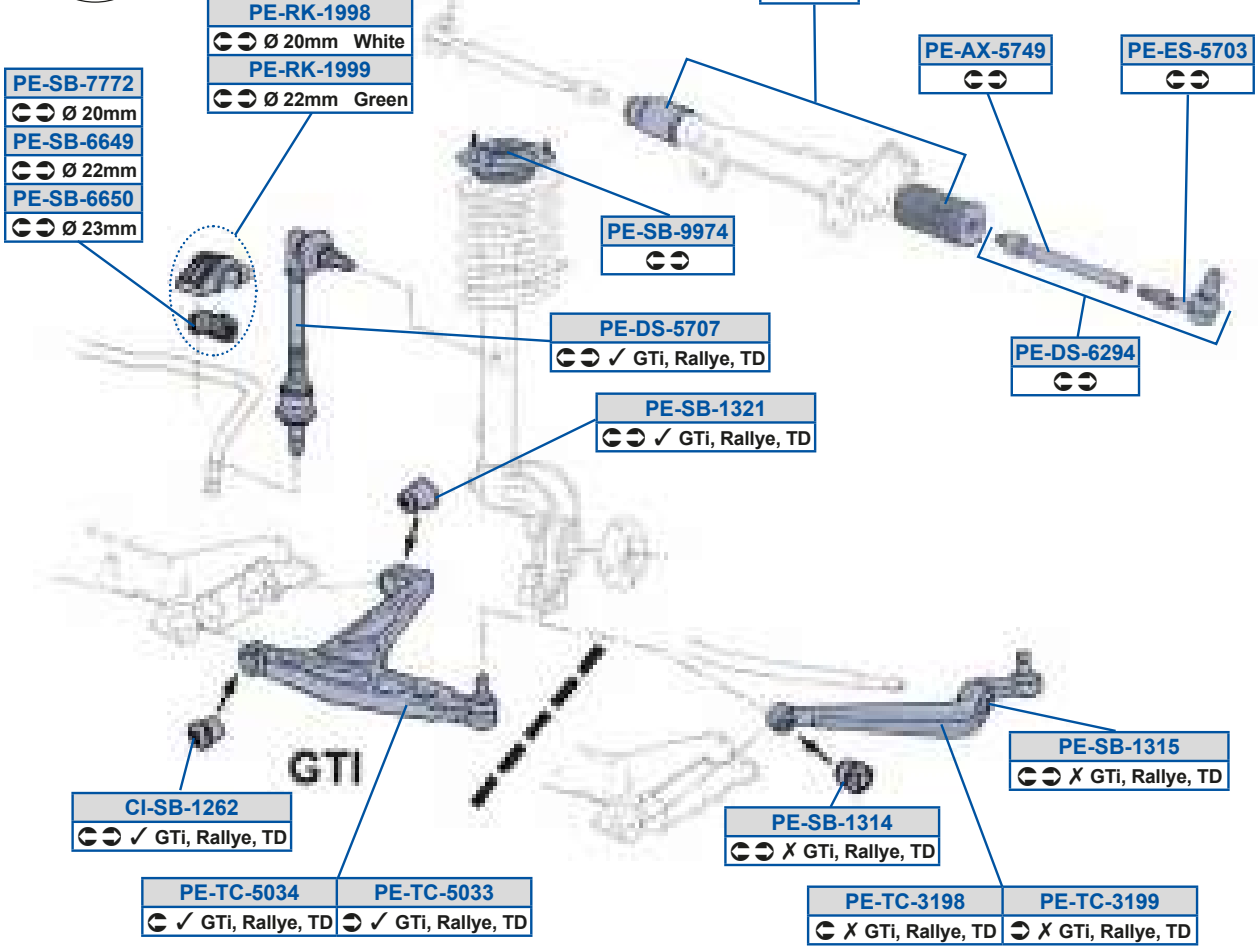

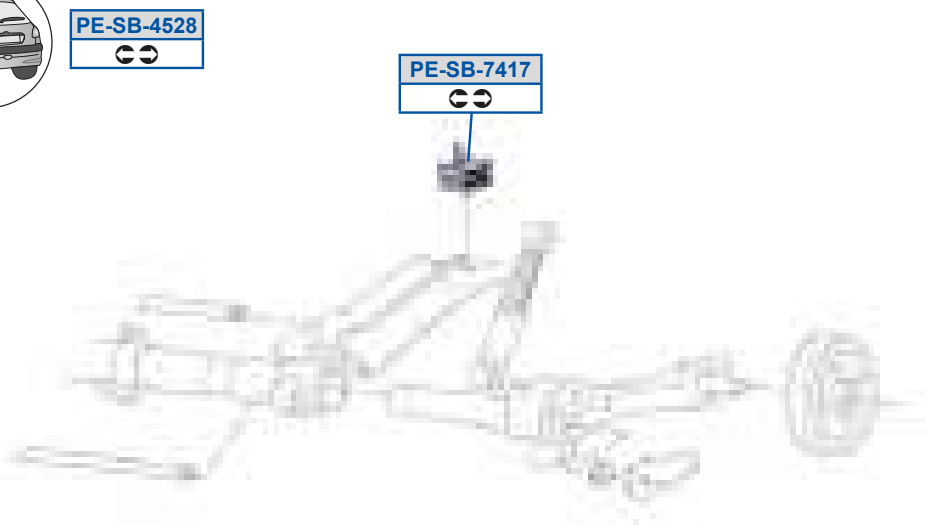

Y9C888C
B7DD8C3EG877A77EA

aS5dP5DDBG
C7GBAE

Y9C888G
B7DD8D3B7DD97

aS5dP5DDC8
C7GBB7

aS5Oi 5CEBG
AF899C3AF89GB

aS5dP5EB9E
C8C887

aS5Rd5D>GB
AF89A93AF89GC

aS5dP5EEE>
C7GBAD

aS5Sd5CE8A
AF8E7G/4CBAF8E87

aS5dP5GGEB
C7AC8F

aS5dP59A9B
AC9A97

aS5eQ5A9GF
AC97BF3AC97BG

aS5dP59A9C
AC9ABG

aS5eQ5A9GG
AC98A83AC98AA

aS5dP5BC>F
C8A8BA

; 8D3 ŒAS1	8978G	; 8D QQ Q, R1	8G788
; 8D Vt vÉut v Q, O7Q1	8F7GF	; 8D dt	8A78E
; 8D dh Q, S7Y1	8E78;	; 8D gt	8B7GG 8A78G

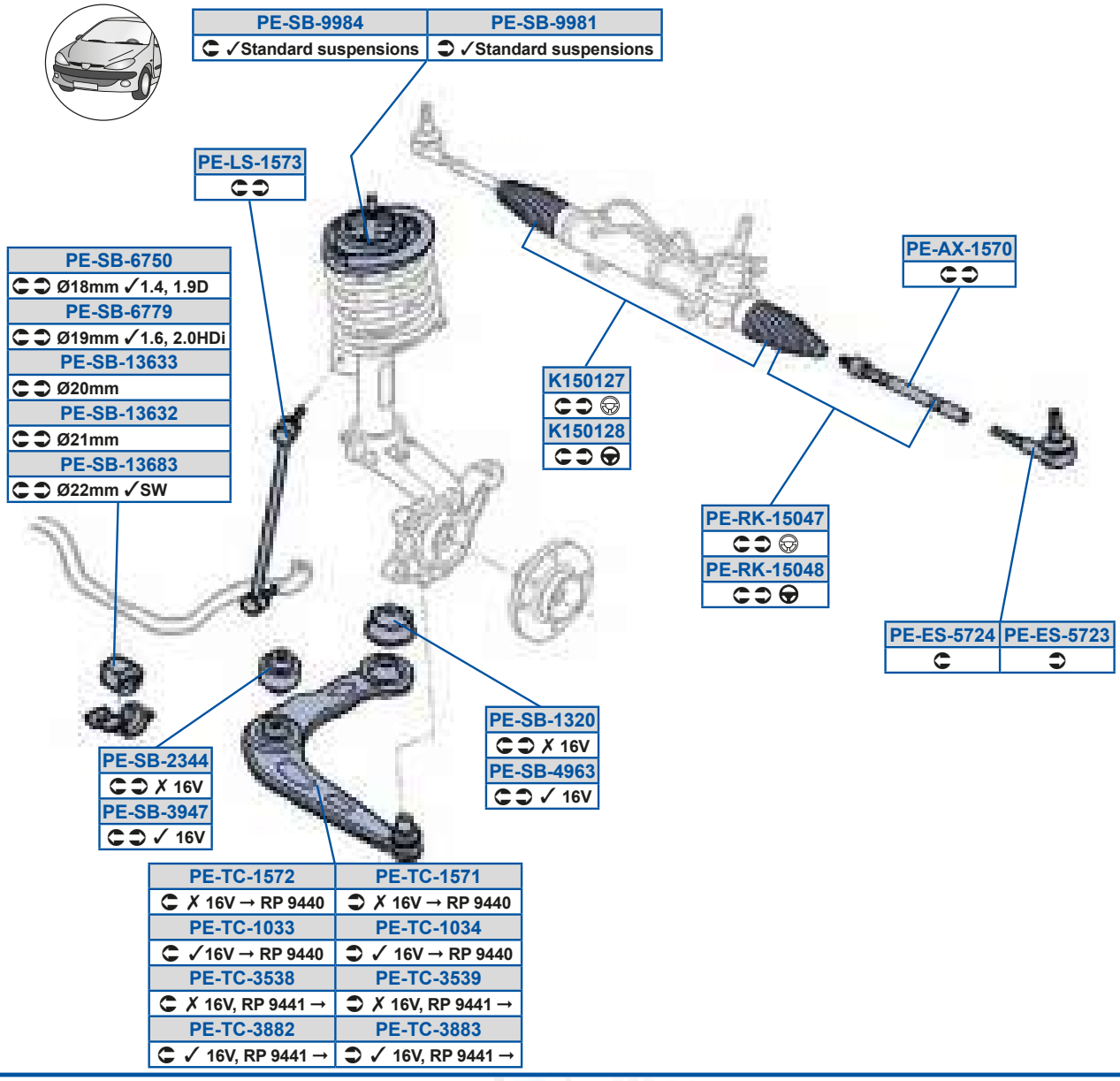

Y9C89>E
B7DDCD

Y9C89>F
B7DDCE3B7DDDB

aS5Oi 59CE8
AF89QC

aS5Sd5CE>A
AE8EB83AF8E8B

aS5Sd5CE>B
AF8E8D3AF8EA8

aS5Zd59CEA
C7FEBC3C7FECG

aS5c Y59C8BE
AF89QC

aS5c Y59C8BF
AF89QC

aS5dP59898F
C8A8GB

aS5dP598998
C8A8GA3C8A8OG

aS5dP59A>8
AC9AEE3AC9AG9

aS5dP59ADA>
C7GBGC

aS5dP59ADAA
C7GBF9

aS5dP59ADFA
C7GBGB

aS5dP5>ABB
AC9AED3AC9AOU

aS5dP5AGBE
AC9AEG3AC9AOo

aS5dP5BGDA
AC9AF7

aS5dP5DEC8
C7GBF8

aS5dP5DEEG
C7GBF7

aS5dP5GGF9
C7AC9A3C7AC9E

aS5dP5GGFB
C7AFAC

aS5eQ598AA
AC97VE3AC97i 9

aS5eQ598AB
AC98SE3AC98Y9

aS5eQ59CE9
AC98QF3AC98i C

aS5eQ59CE>
AC97UF3AC97oB

aS5eQ5ACAF
AC97UF3AC97ZE

aS5eQ5ACAG
AC98QF3AC98VG

aS5eQ5AFF>
AC97ZF3AC97oA

aS5eQ5AFFA
AC98X73AC98Xe

aSf US_ e

; 8E 0h 0r 4h 0r 1	8; 78D	; 8E 0Q 0h Rr 1	8; 78E
; 8E dh 0h Yr 1	8; 78E	; 8E gt	8B78E
; 8E dt	9; 78E		

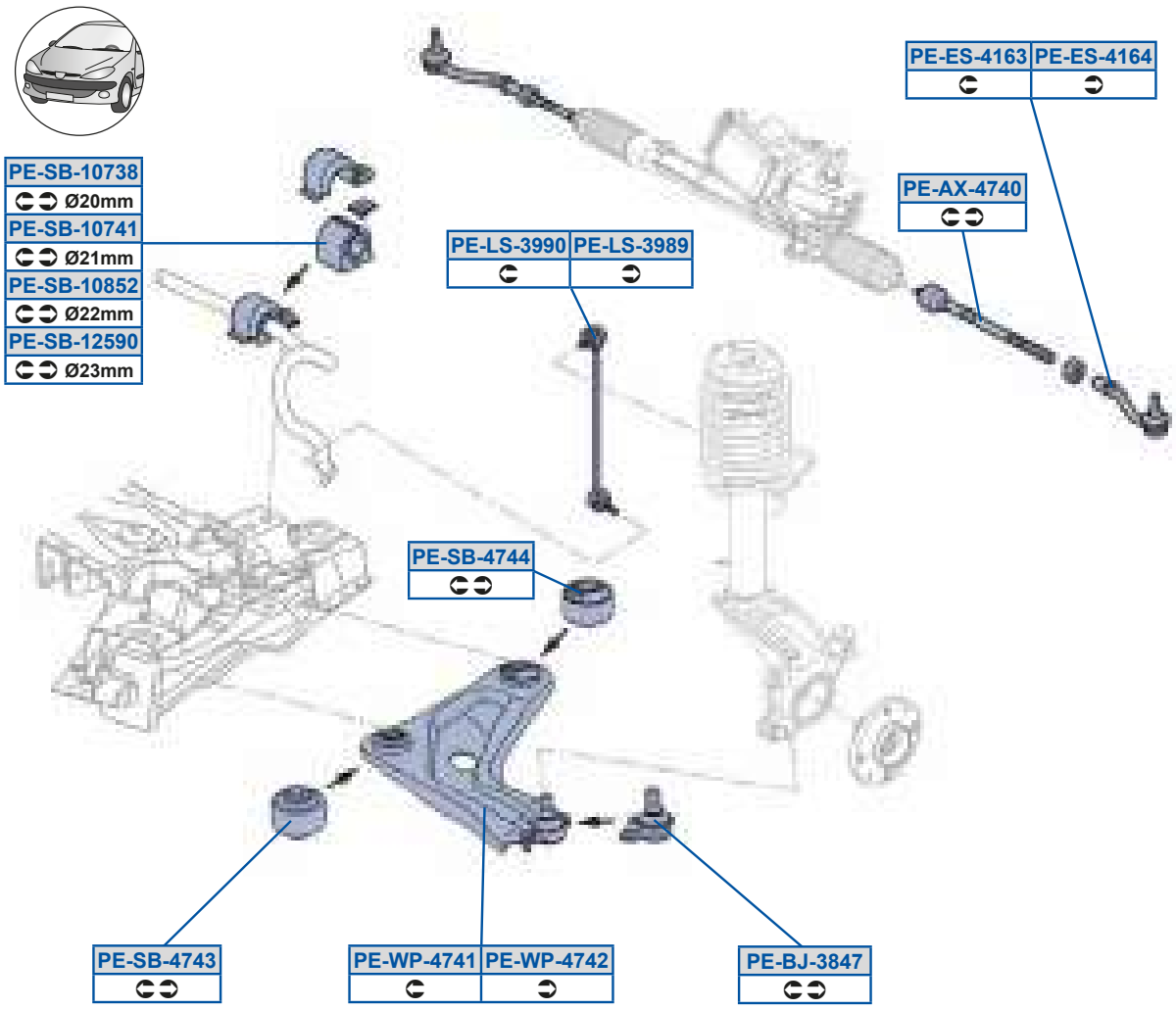

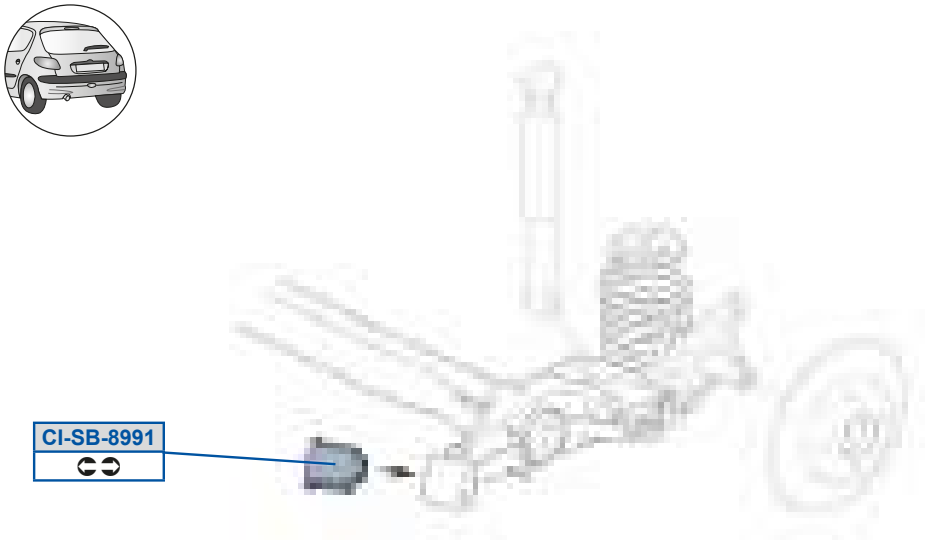

MOOG

QW8dP5FGG9
C8A8SG3C8A8T7

aS5dP598EB9
C7GBQ9

aS5Oi 5BEB8
AF89SF

aS5dP598FC>
C7GBQA

aS5PX5AFBE
ADB7D83ADB7D9

aS5dP59>CG8
C7GBQC

aS5Sd5B9DA
AF8EDE

aS5dP5BEBA
AC9AQS

aS5Sd5B9DB
AF8EDF

aS5dP5BEBB
AC9AQQ

aS5Zd5AGFG
C7FECC3C7FEDF

aS5h a5BEB9
AC97l G3AC97nE

aS5Zd5AGG8
C7FECB3C7FEDG

aS5h a5BEB>
AC98d73AC98dF

aS5dP598EAF
C7GBQ8

; 8F	8A79;	; 8F P	9879;

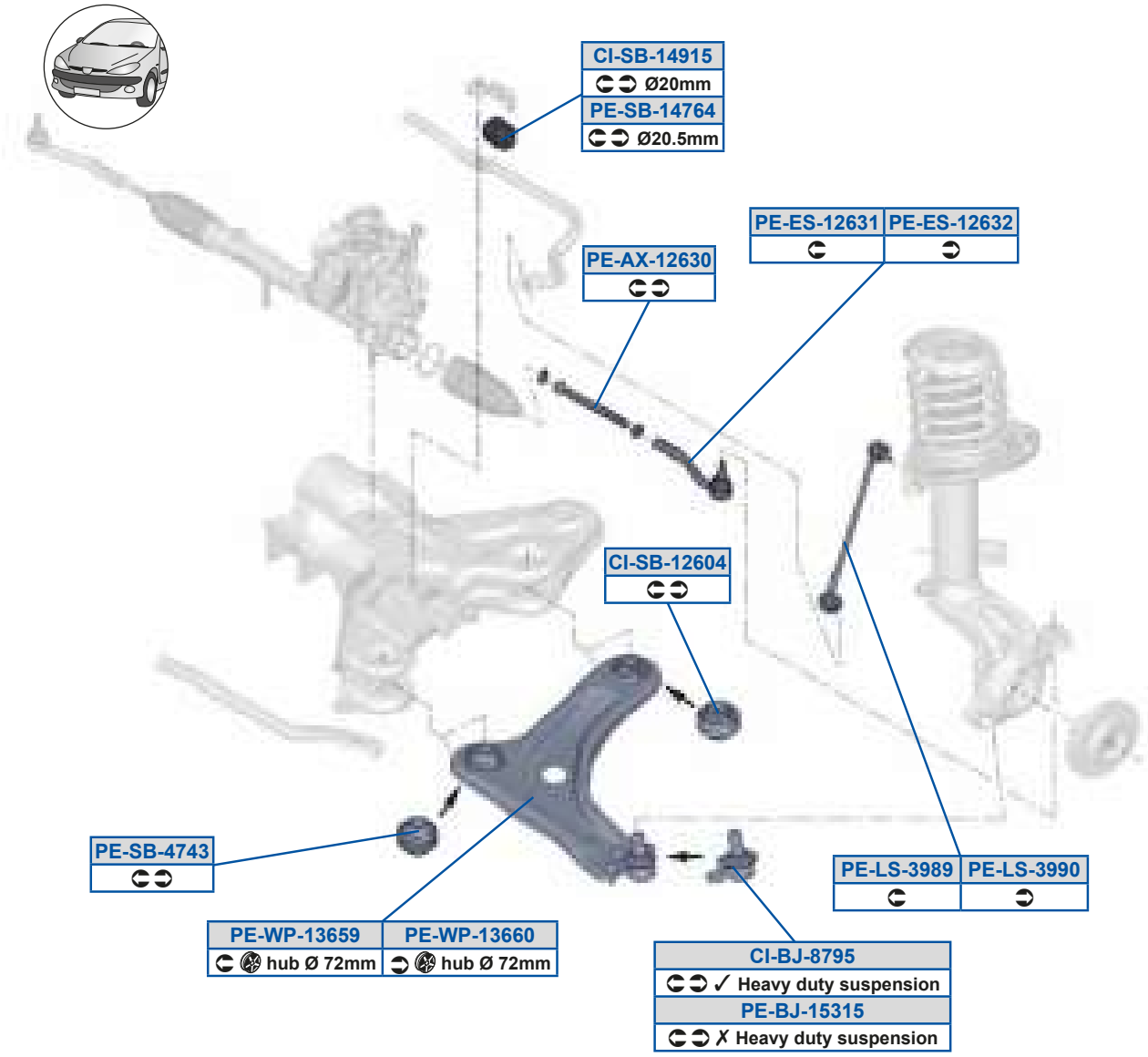

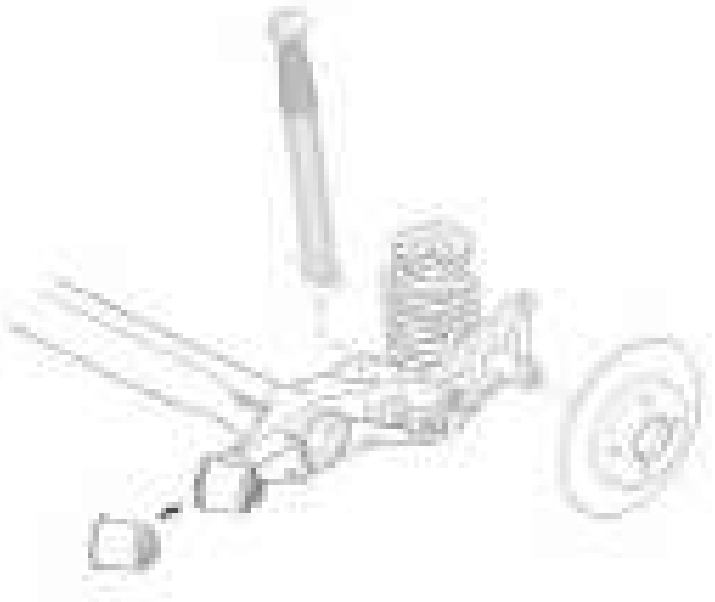

QW5PX5FEGC
ADB7EE

aS5Zd5AGG8
C7FECB3C7FEDG

QW5dP59>D8B
AC9ASQ3AC9ASS

aS5dP59BEDB
GDEBEBD9F7 /40

QW5dP59BG9C
C7F8i A

aS5dP5BEBA
AC9AQS

aS5Oi 59>DA8
8D7F79CAF7

aS5h a59ADCG
GDE7EE97F7

aS5PX59CA9C
ADB7EF

aS5h a59ADD8
GDE7EE8BF7

aS5Sd59>DA9
8D7F79C8F7

aS5Sd59>DA>
8D7F79C9F7

aS5ZD5AGFG
C7FECC3C7FEDF

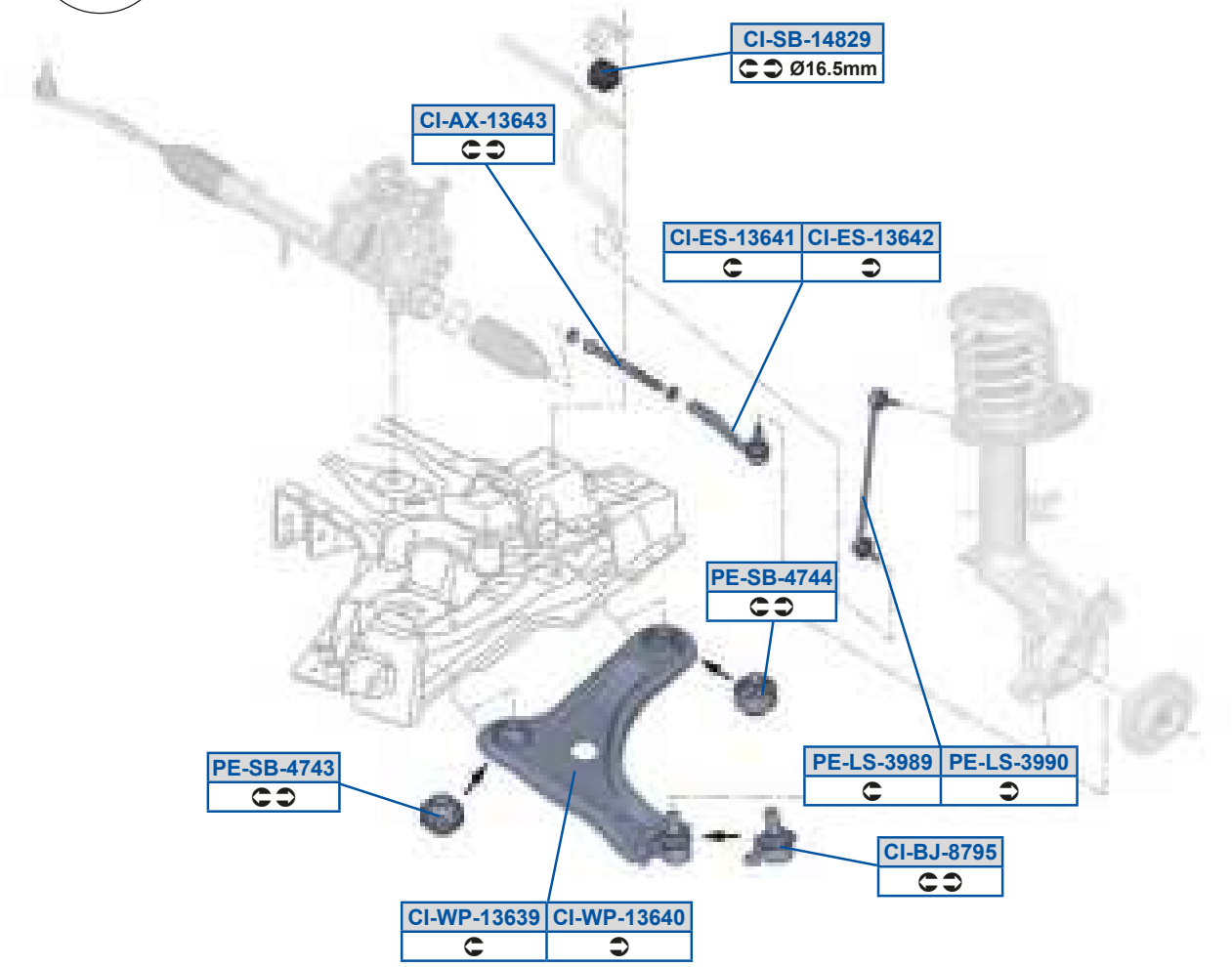
CI-SB-14829
Ø16.5mm
CI-AX-13643
CI-ES-13641
CI-ES-13642
PE-SB-4744
PE-SB-4743
PE-LS-3989
PE-LS-3990
CI-BJ-8795
CI-WP-13639
CI-WP-13640

MOOG

QV5Oi 59ADBA
8D7FDC98F7

aS5Zd5AGG8
C7FECB3C7FEDG

QV5PX5FEGC
ADB7EE

aS5dP5BEBA
AC9AQS

QV5Sd59ADB9
8D7FDC99F7

aS5dP5BEBB
AC9AQQ

QV5Sd59ADB>
8D7FDC9AF7

QV5dP59BF>G
8D7FAFFCF7

QV5h a59ADAG
GDEC7A8FF7

QV5h a59ADB8
GDEC79FFF7

aS5Zd5AGFG
C7FECC3C7FEDF

aSf US_ e

A8D ŒP4] A4] C1	8B7GA 9878A	A8D P xt ŒS4] A4] C1	8D7GB 8B78;
A8D Q x áı x ŒR4] A4] C1	8A7GB 8B78;	A8D Vt vÉut v ŒO4EQ4] A4] C1	897GA 9878A
A8D P P w 7S t x Q] r 4Er 1	8E7GA 8F78;	A8D P P w 7Vt vÉut v	8B7GA 8F789

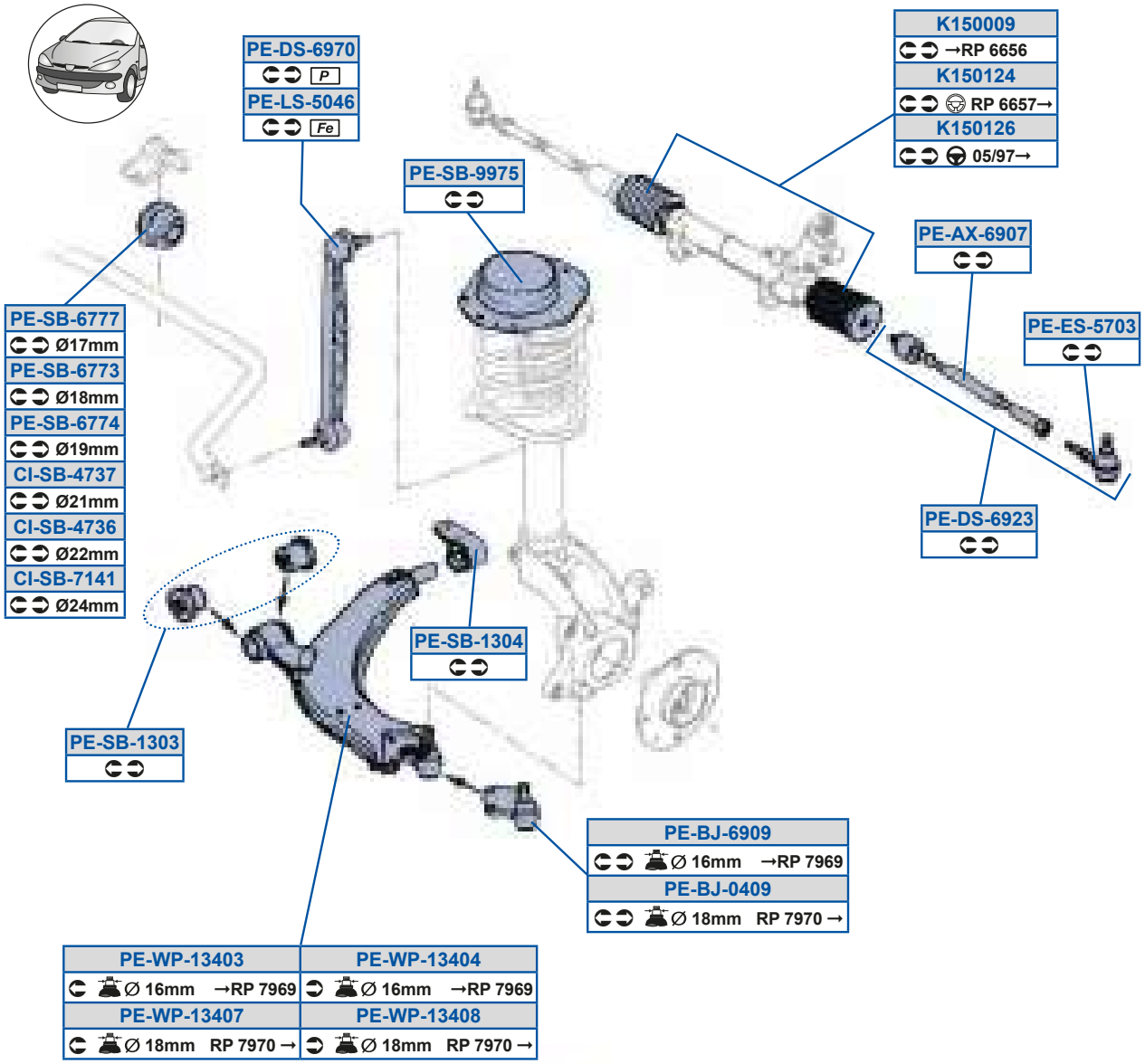

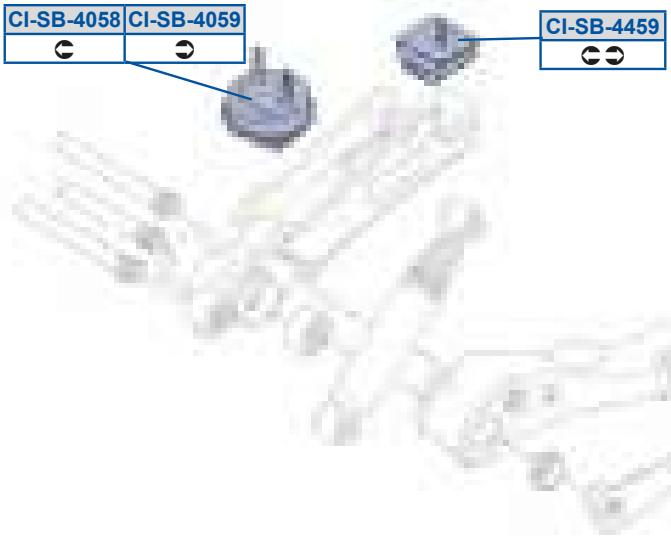

QW6dP5B8CF
C8A8DG3GD8BEBEF

Y9C89>D
B7DD8D3B7DD99

aS5dP59A8A
GD887BFA

aS5h a59AB8E
AC97SG3AC97VA

QW6dP5B8CG
C8A8E73GD8BEBEG

aS5Oi 5DG8E
AF89G9

aS5dP59A8B
AC9AD93AC9AEC

aS5h a59AB8F
AC98773AC98GG

QW6dP5BBCG
C8A8E8

aS5PX58B8G
ADB7BF3ADB7BG

aS5dP5DEEA
C7GBDB

QW6dP5BEAD
C7GBEE

aS5PX5DG8G
ADB7A73ADB7A8

aS5dP5DEEB
C7GBDD

QW6dP5BEAE
C7GBDC

aS5Rd5DG>A
AF89G9

aS5dP5DEEE
C7GBDA

QW6dP5E9B9
C7GBDG

aS5Rd5DGE8
C7FEAF3C7FEB9

aS5dP5GGEC
C7AC9A3C7AC9E

Y9C888G
B7DD8D3B7DD97

aS5Sd5CE8A
AF8E7G /4CBAF8E87

aS5h a59AB8A
AC97FA3AC97FB

Y9C89>B
B7DDBA3B7DDBB

aS5Zd5C8BD
C7FEAB3C7FEAG

aS5h a59AB8B
8D8BBBE8F73AC98CC

aSf US_ e

A8E 0A07Q1	8F788	A8E P xt 0AS1	8A78; 9; 78G
A8E QQ 0AP1	9878A	A8E dh 0AV1	8A78;

A8E

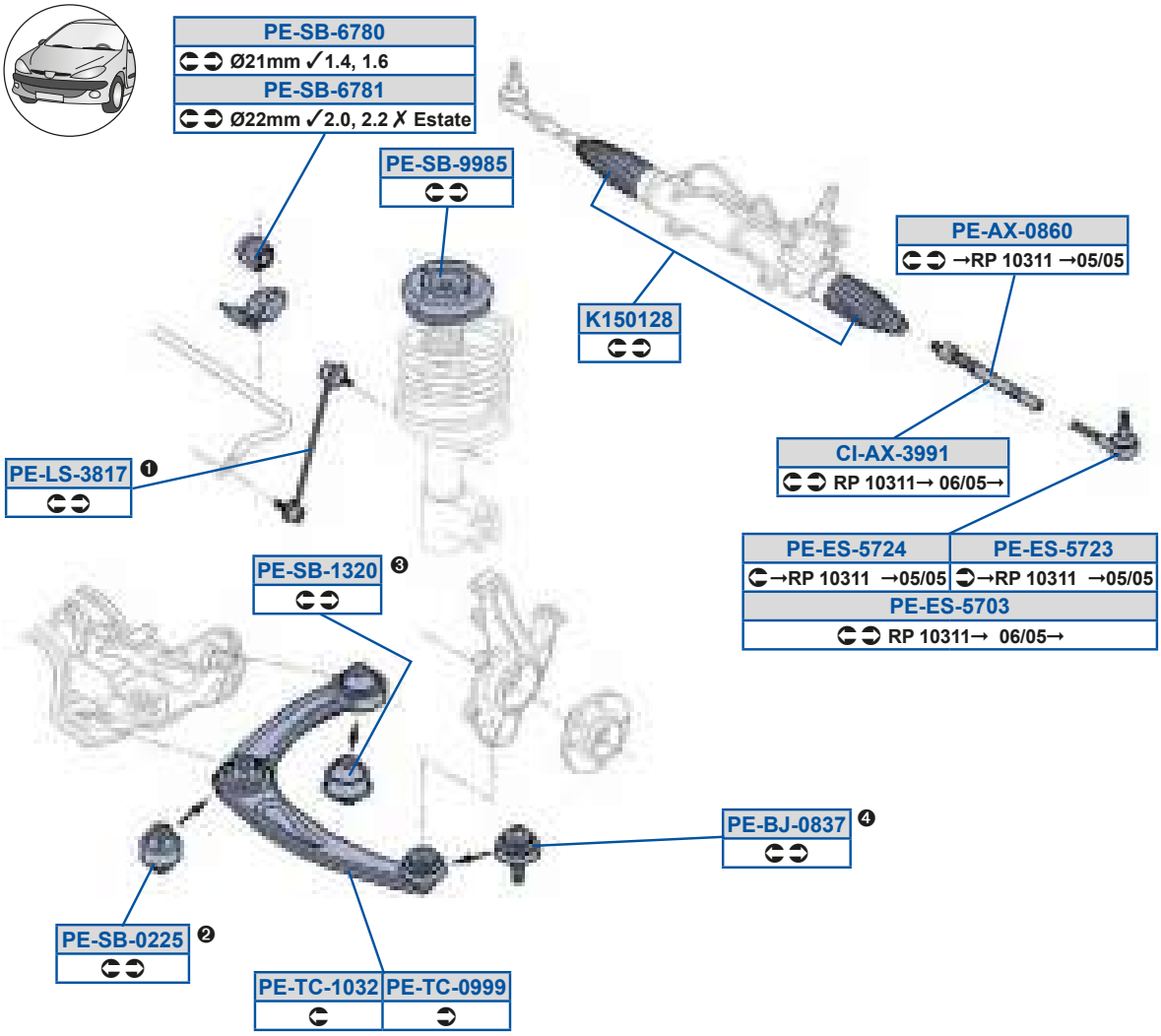

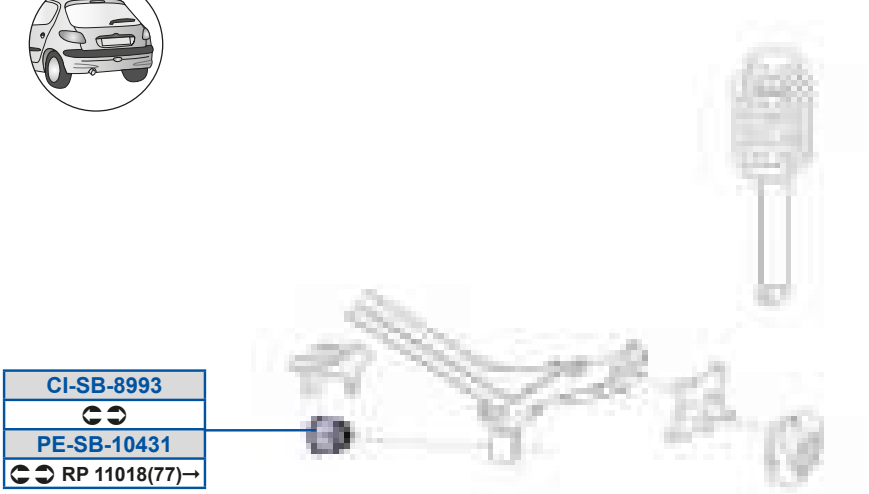

aSf US_ e

MOOG

QW5Oi 5AGG9
AF89SC

QW5c Y5BFGB

QW5dP5FGGA
C8A8OB

Y9C89>F
B7DDCE3B7DDDB

aS5Oi 58FD8
8D7E9GADF73AF89S7

aS5PX58FAE
ADB7CA3ADB7D7

aS5Sd5CE8A
AF8E7G/4C8AF8E87

aS5Sd5CE>A
AE8EB83AF8E8B

aS5Sd5CE>B
AF8E8D3AF8EA8

aS5Zd5AF9E
C7FEC73C7FECE

aS5dP58>>C
AC9AG83AC9AOX

aS5dP598BA9
C8A8OC

aS5dP59A>8
AC9AEE3AC9AG9

aS5dP5DEF8
C7GBFE

aS5dP5DEF9
C7GBFF

aS5dP5GGFC

aS5eQ58GGG
AC98UF3AC98YA

aS5eQ598A>
AC97YF3AC97o9

aSf US_ e

A8F 0B0r 4BQr 1	8G78E	A8F QQ 0BPr 1	8B78G
A8F dh 0BSr 4BVr 1	8G78E		

A8F

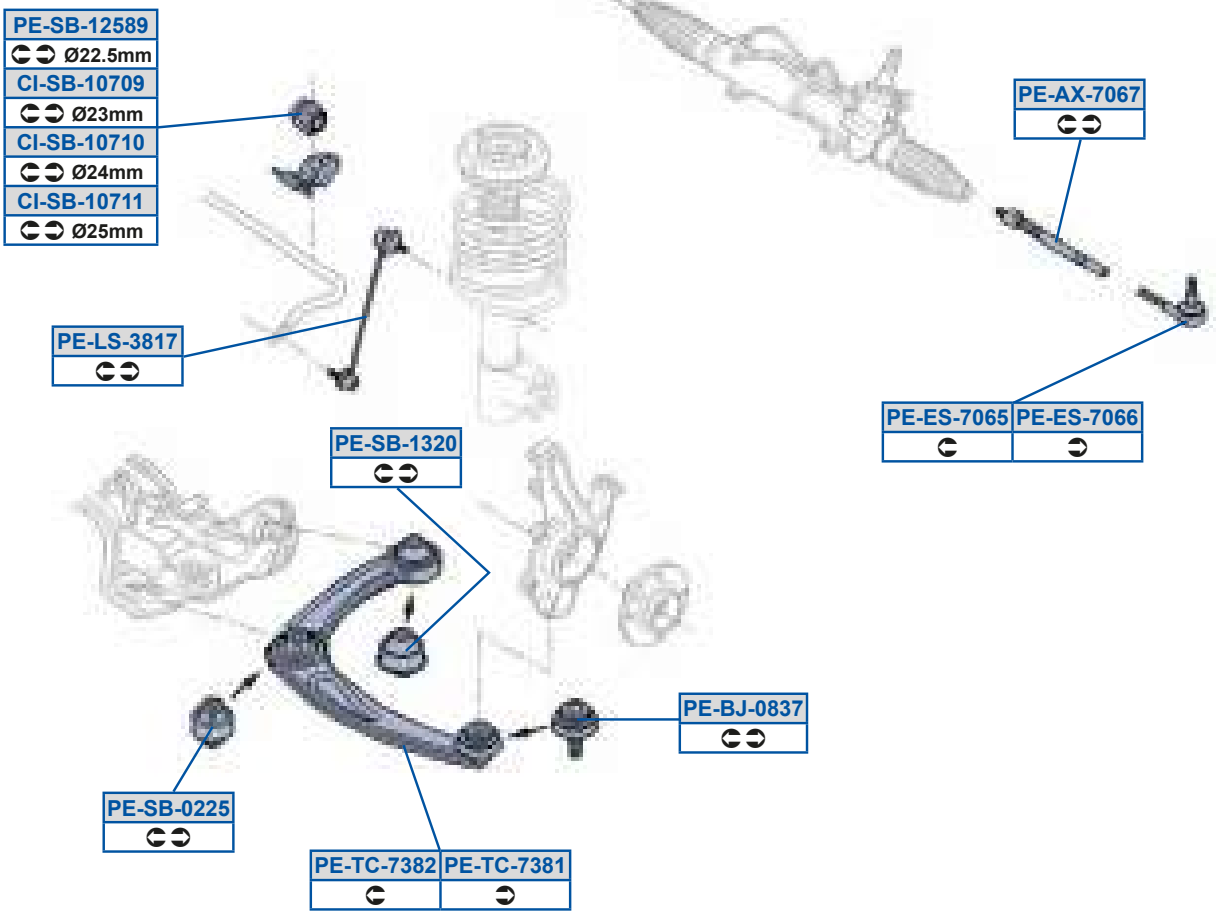

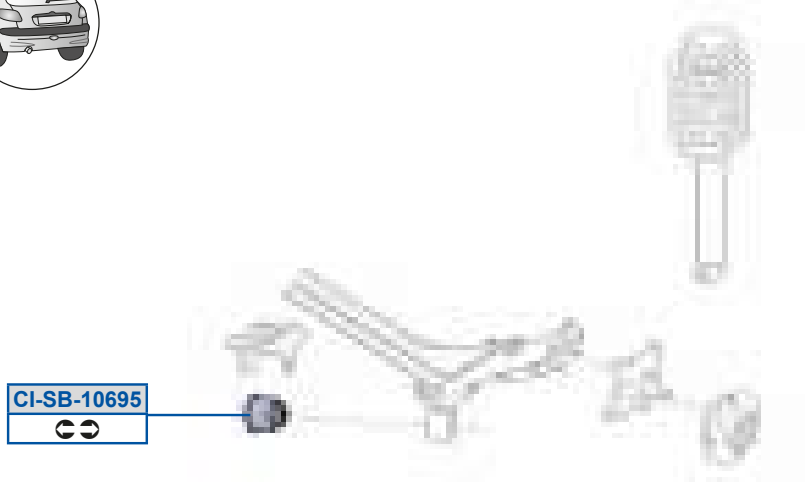

aSf US_ e

MOOG

QW5dP598DGC
C8A8UB

QW5dP598E8G
C7GBSA

QW5dP598E98
C7GBSB

QW5dP598E99
C7GBSE

aS5Oi 5E8DE
AF89T9

aS5PX58FAE
ADB7CA3ADB7D7

aS5Sd5E8DC
AF8EED3AF8EFG

aS5Sd5E8DD
AF8EEC3AF8EFF

aS5Zd5AF9E
C7FEC73C7FECE

aS5dP58>>C
AC9AG83AC9AOX

aS5dP59>CFG
C7GBQB3C7GBS9

aS5dP59A>8
AC9AEE3AC9AG9

aS5eQ5EAF9
AC98nA

aS5eQ5EAF>
AC97 9

aSf US_ e

A8F WW	8G79A	A8F dh WW	8A79B

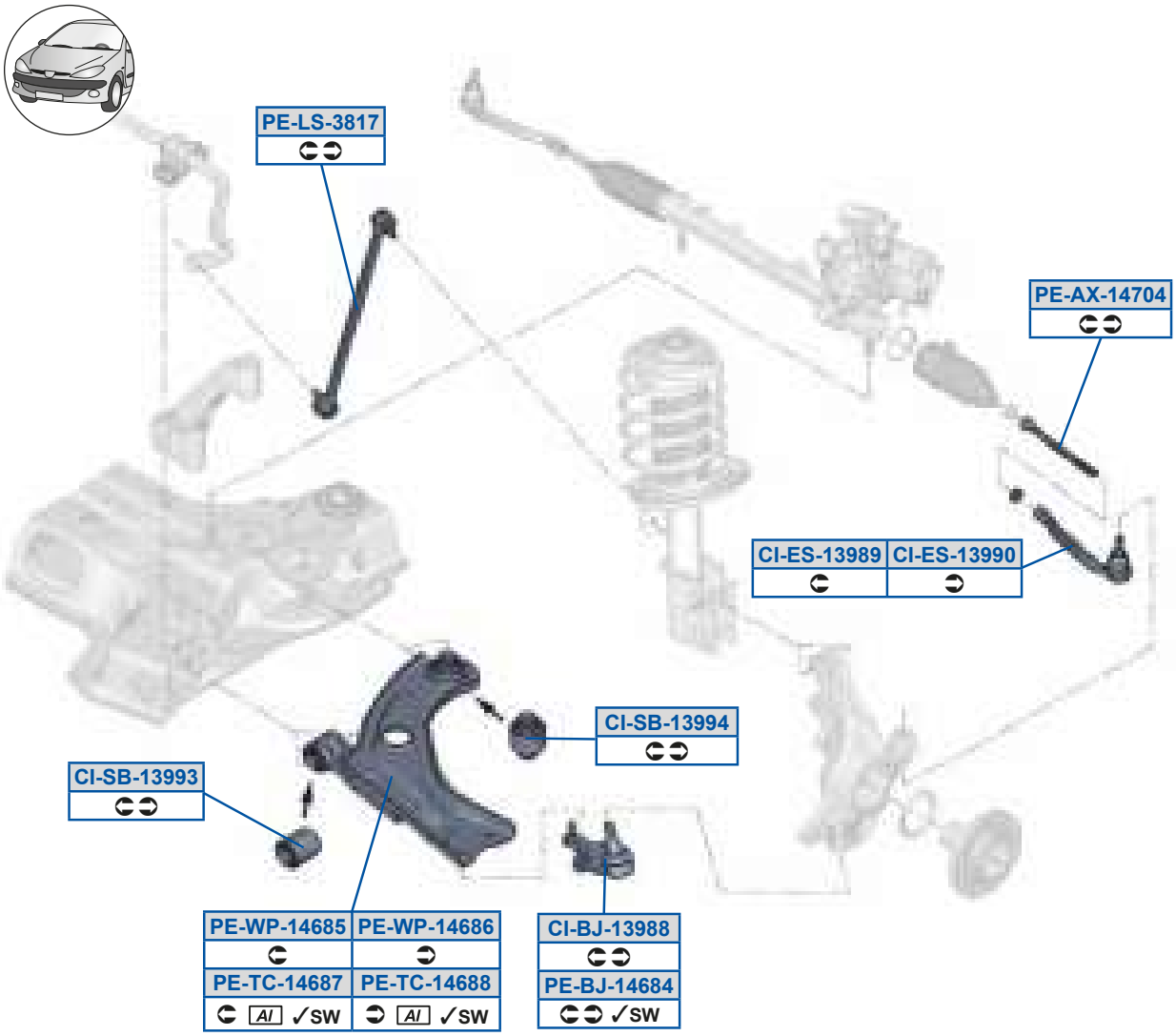

MOOG

QW5PX59AGFF
GF7ABAB7F7

QW5Sd59AGFG
8D87F8EEF7

QW5Sd59AGG8
8D87F8EFF7

QW5dP59AGGA
GDED7A98F7

QW5dP59AGGB
GDED7AC9F7

aS5Oi 59BE8B
8D889B9AF7

aS5PX59BDFB
GDE98G9BF7

aS5Zd5AF9E
C7FEC73C7FECE

aS5eQ59BDFE
GF77CGDDF7

aS5eQ59BDFF
GF77CGDCF7

aS5h a59BDFC
GF7EG8B9F7

aS5h a59BDFD
GF7EG8B8F7

aSf US_ e

B8C WP xt 0BS1	8F7G; 987GF	B8C W09CP1	897FE 9; 7GA
B8C WP xt 09CS1	8D7FE 8F7G;	B8C W0BP1	897G; 997GG
B8C 09CP1	987GC		

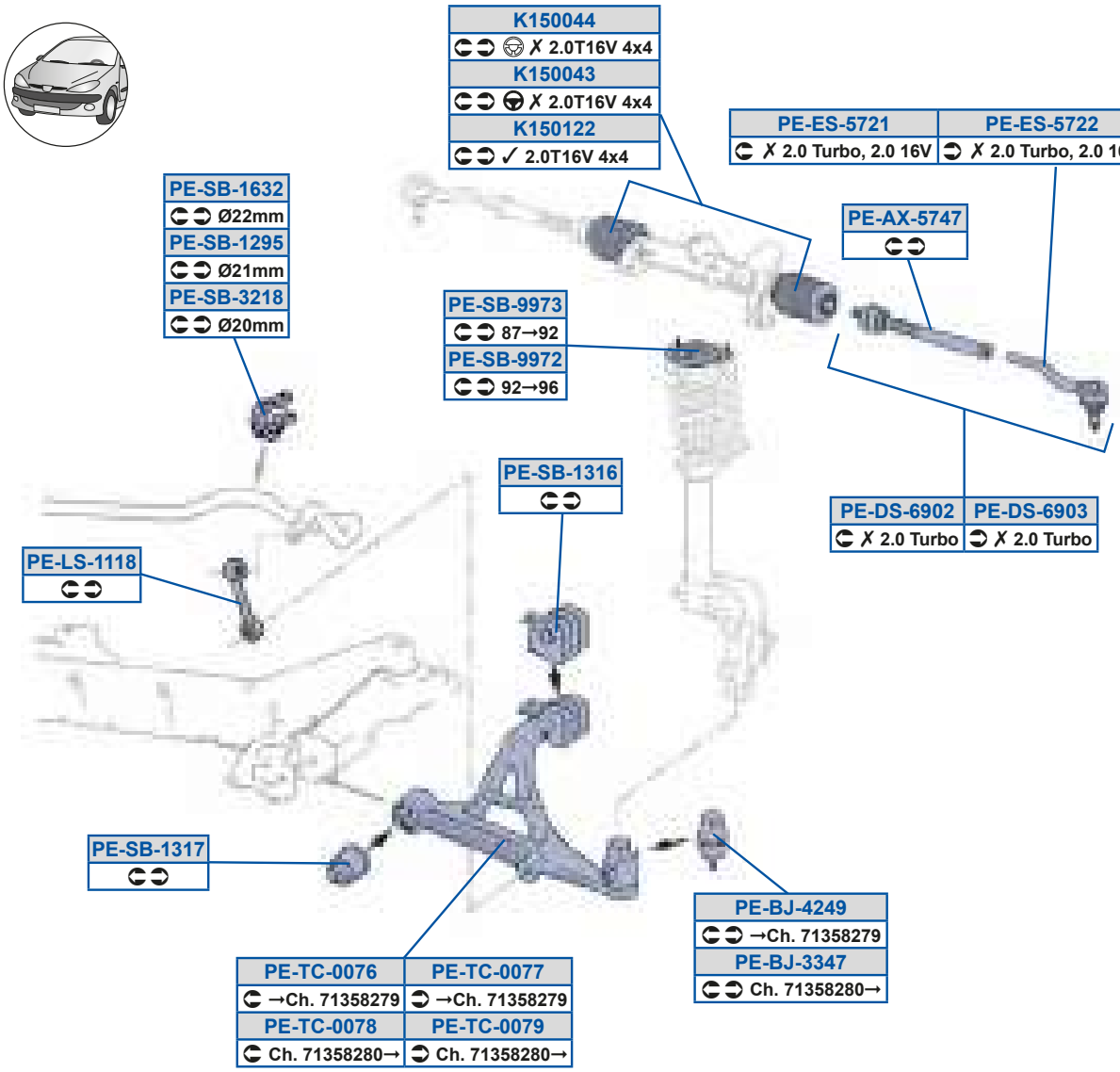

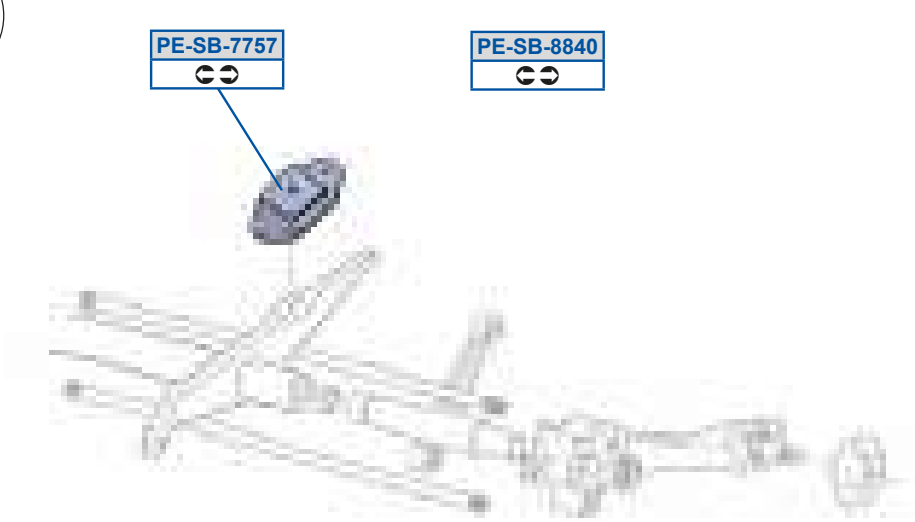

MOOG

Y9C88BA
B7DD983B7DD9G

aS5Sd5CE>>
AF8E993AF8E9E

aS5dP5FFB8
C8A8BE

Y9C88BB
B7DD9G3B7DDAE

aS5Zd5999F
C7FE9E

aS5dP5GGE>
C7AE9D

aS5Oi 5CEBE
AF89BE /40BAF89C7 /40

aS5dP59>GC
C7GBCA

aS5eQ588ED
AC97DC3AC97DF

aS5PX5AABE
ADB79F3ADB7AB

aS5dP59A9D
AC9AB93AC9ACB

aS5eQ588EE
AC98BD3AC98BG

aS5PX5B>BG
ADB7973ADB798

aS5dP59A9E
AC9AB7

aS5eQ588EF
AC97BE3AC970D

aS5Rd5DG8>
AF89E9

aS5dP59DA>
C7GBAB

aS5eQ588EG
AC98ED3AC98EE

aS5Rd5DG8A
AF89EA

aS5dP5A>9F
C7GBAC

aS5Sd5CE>9
AF8E983AF8E9D

aS5dP5EECE
C8C89B

aSf US_ e

B8D CFP1	987GC 8978C	B8D P xt CFS7T1	987GD 9878B
B8D Q x CFQ1	8A7GE 9; 78B		

B8D

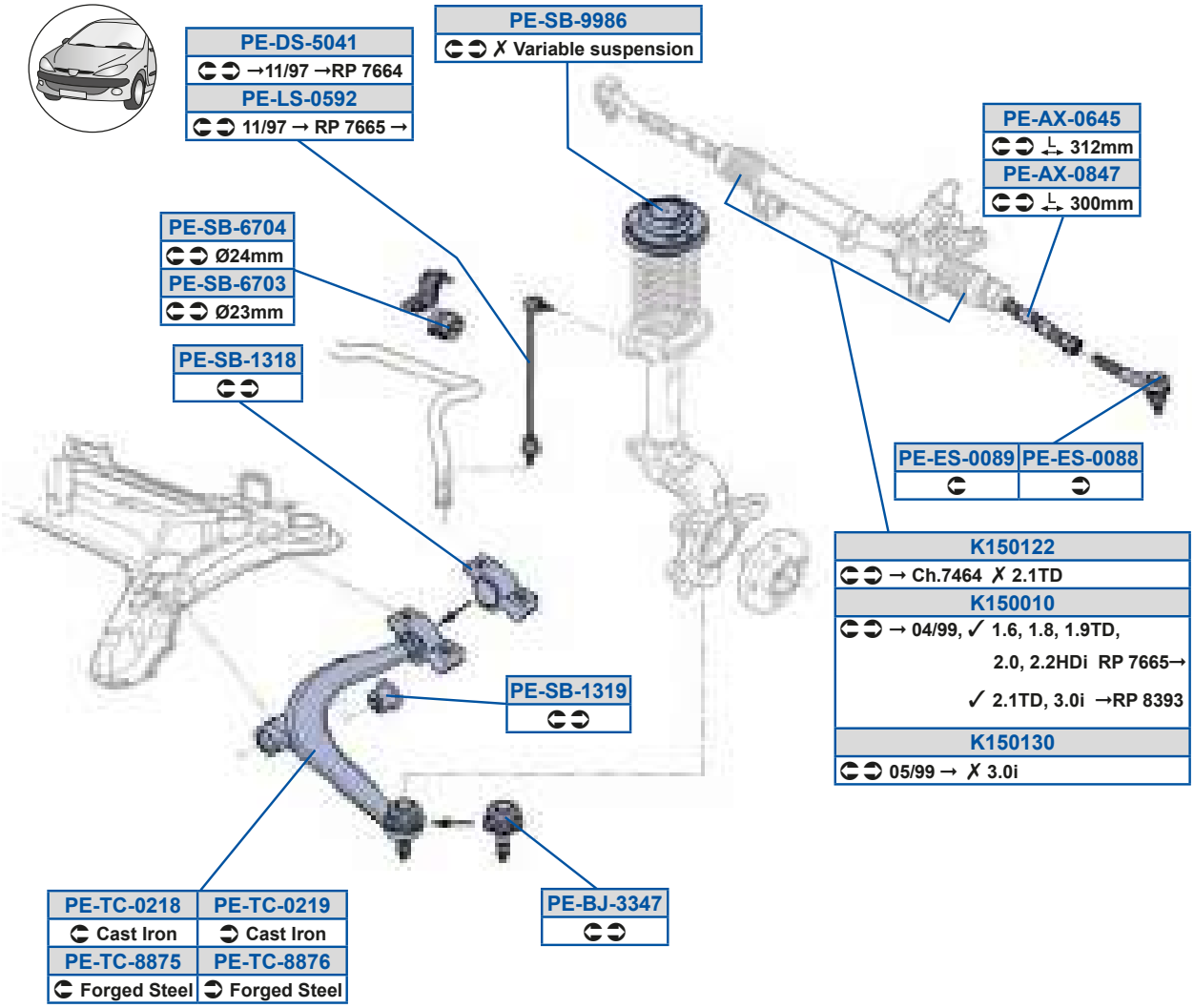

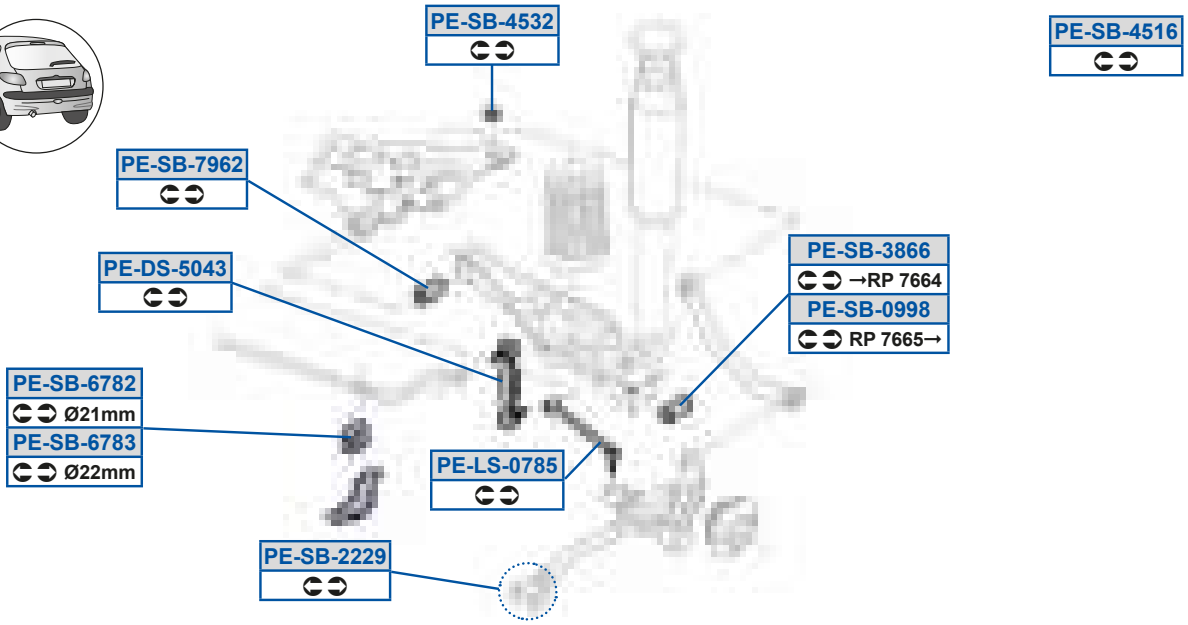

aSf US_ e

MOOG

Y9C8898
B7DD993B7DDC9

aS5Sd588FF
AF8EAG

aS5dP5AFDD
ADB7AC

aS5dP5GGFD
C7AF9C

Y9C89>>
B7DD983B7DDA7

aS5Sd588FG
AF8EB7

aS5dP5BC9D
C8A8EF

aS5eQ58>9F
AC97Q73AC97V8

Y9C89A8
B7DDCC3B7DDD7

aS5Zd58CG>
C7FEBA3C7FEBF

aS5dP5BCA>
C8C9CG

aS5eQ58>9G
AC98F73AC98Q7

aS5Oi 58DBC
AF89OG3AF89QB

aS5Zd58EFC
C8EFAG

aS5dP5DE8A
C7GBEB

aS5eQ5FFEC
AC97Q73AC97V8

aS5Oi 58FBE
AF89Q83AF89QA

aS5dP58GGF
ADB7B8

aS5dP5DE8B
C7GBEC

aS5eQ5FFED
AC98F73AC98Q7

aS5PX5AABE
ADB79F3ADB7AB

aS5dP59A9F
AC9AD8

aS5dP5DEF>
C8E9B9

aS5Rd5C8B9
C7FEB73GD8EEFADF7

aS5dP59A9G
AC9AD73AC9AEF

aS5dP5DEFA
C8E9BA

aS5Rd5C8BA
C8EFAF

aS5dP5>>>G
C8A8EG3C8A8GG

aS5dP5EGD>
C8A8F7

aSf US_ e

B8E ODRr 1	8C78B	B8E Q x ODQr 1	9878C
B8E dh ODSr 1	8C78B		

B8E

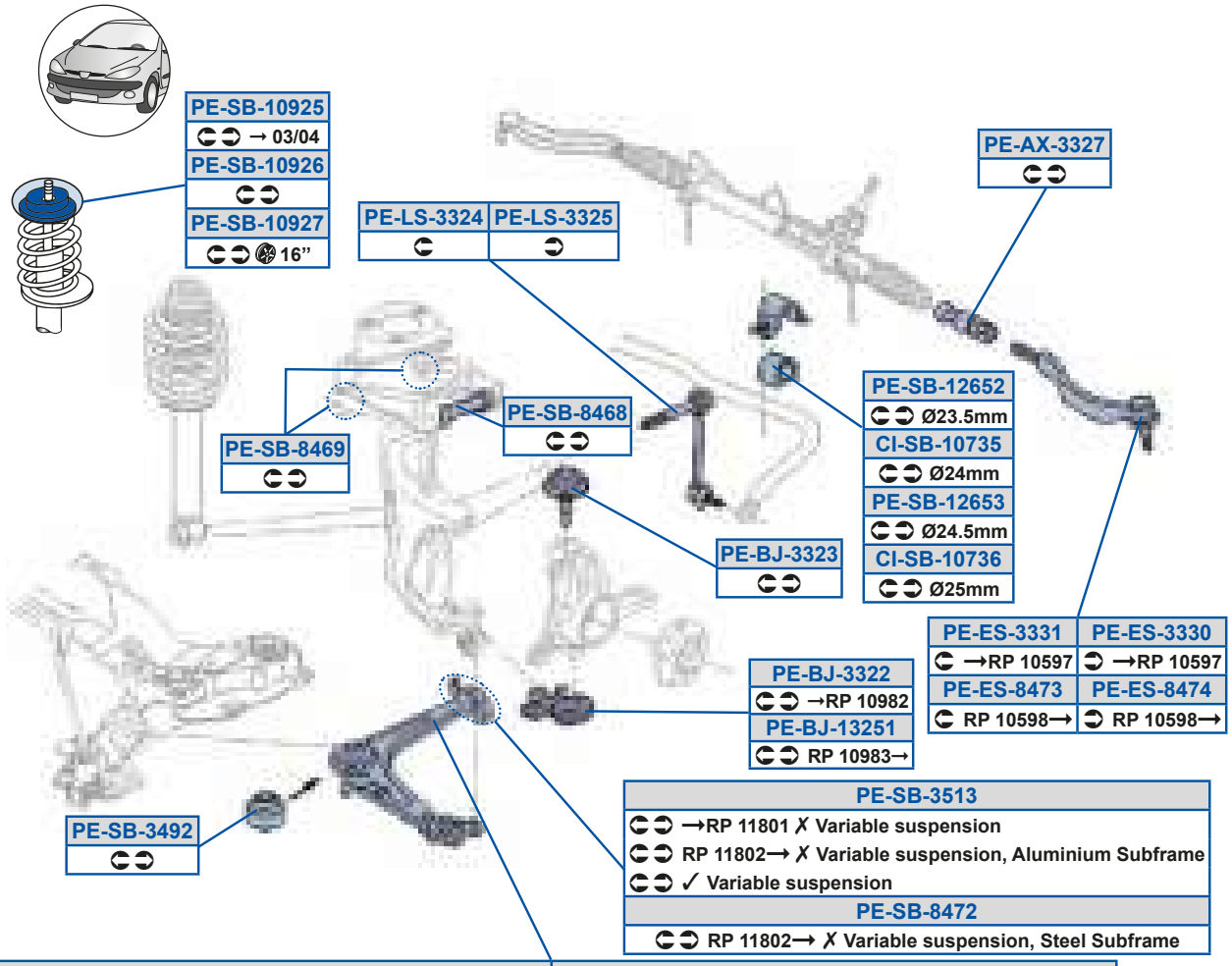

PE-WP-3320	PE-WP-3321
→RP 11801 ✗ Variable suspension	→RP 11801 ✗ Variable suspension
RP 11802→ ✗ Variable suspension, Aluminium Subframe	RP 11802→ ✗ Variable suspension, Aluminium Subframe
PE-TC-14719	**PE-TC-14720**
RP 11802→ ✗ Variable suspension, Steel Subframe	RP 11802→ ✗ Variable suspension, Steel Subframe
PE-TC-5754	**PE-TC-5755**
✓ Variable suspension	✓ Variable suspension

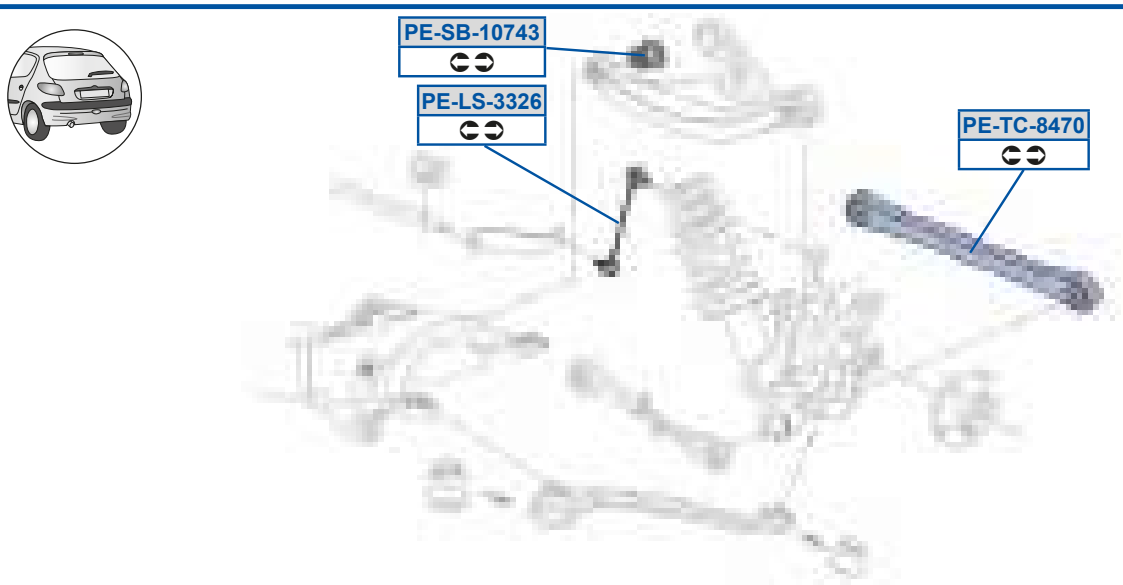

aSf US_ e

MOOG

QW5dP598EAC
C7GBGG

aS5Sd5FBEA
AF8EDC

aS5dP598G>E
C7AFSC

aS5eQ59BE9G
AC97 E

QW5dP598EAD
C7GBO8

aS5Sd5FBEB
AF8EDD

aS5dP59>DC>
C7GBGF3C7GBTA

aS5eQ59BE>8
AC98tF

aS5Oi 5AA>E
AF89773AF89777

aS5Zd5AA>B
C7FEC9

aS5dP59>DCA
C7GBO7

aS5eQ5CECB
AC97dE3AC97oF

aS5PX59A>C9
ADB7DG

aS5Zd5AA>C
C7FECA

aS5dP5ABG>
AC9AOI

aS5eQ5CECC
AC98XE3AC98i G

aS5PX5AA>>
ADB7CF3ADB7E9

aS5Zd5AA>D
C8EFBD3C8EFC9

aS5dP5AC9A
AC98XD

aS5eQ5FBE8
C8ECQT

aS5PX5AA>A
ADB7CE3ADB7EB

aS5dP598EBA
C8A8QC3C8A8S7

aS5dP5FBDF
AC9AOZ3AC9AO

aS5h a5AA>8
AC97dD

aS5Sd5AAA8
AF8ECE

aS5dP598G>C
C7AFSD

aS5dP5FBDG
AC9AQO

aS5h a5AA>9
AC97dD3AC98XD

aS5Sd5AAA9
AF8ECF

aS5dP598G>D
C7AFSB

aS5dP5FBE>
AC97 E /40BAC98tF /40

aSf US_ e

C8F	99798	C8F dh	99798

C8F

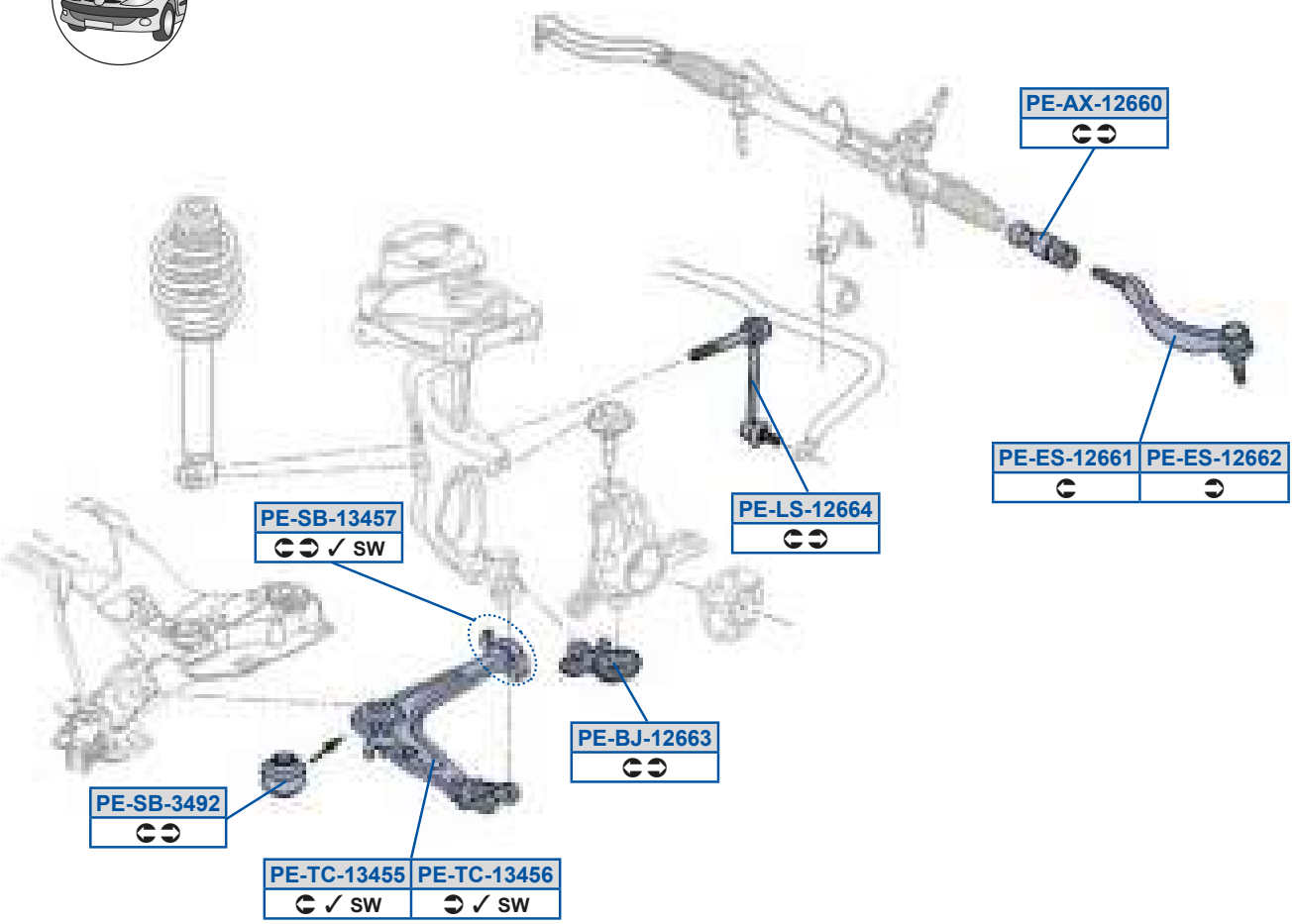

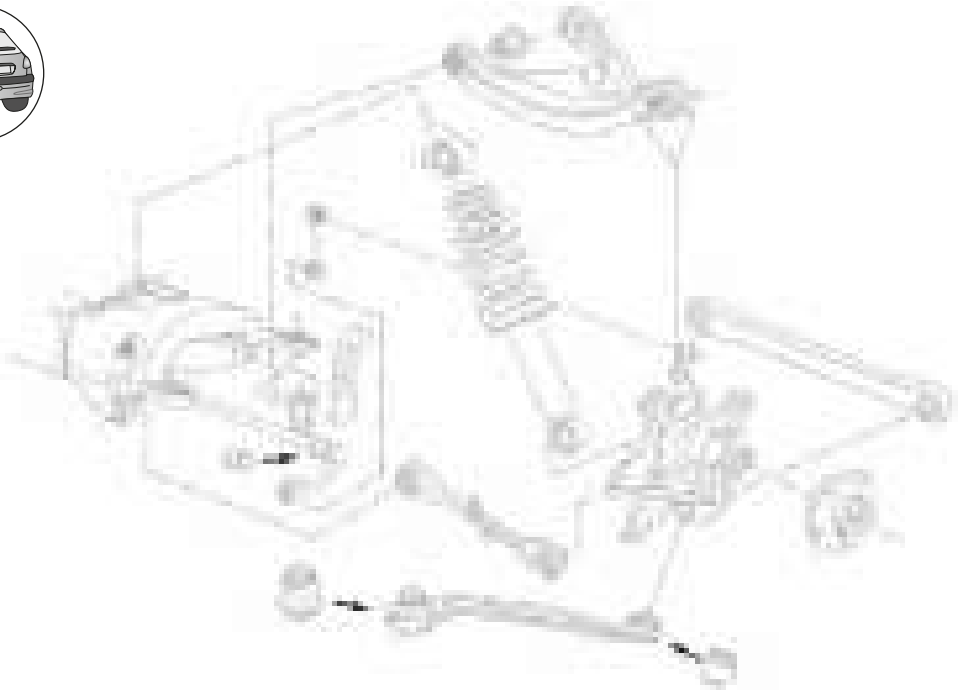

aSf US_ e

MOOG

aS5Oi 59>DD8
AF89UA

aS5PX59>DDA
ADB7FA

aS5Sd59>DD9
AF8E08

aS5Sd59>DD>
AF8E09

aS5Zd59>DDB
C7FEED

aS5dP59ABCE
AC97 7 /403AC98 8 /40

aS5dP5ABG>
AC9A0I

aS5eQ59ABCC
AC97 7

aS5eQ59ABCD
AC98 8

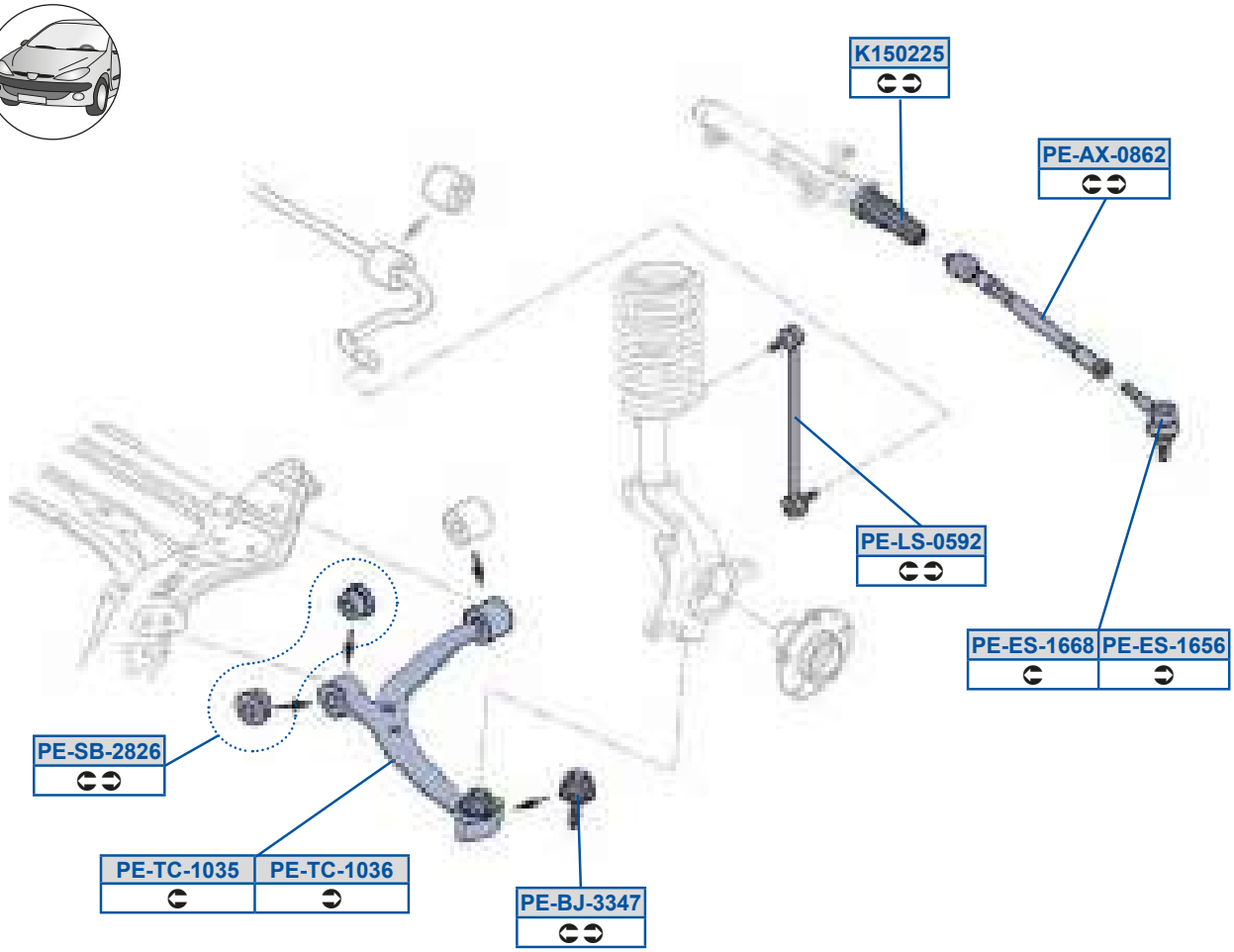
K150225
PE-AX-0862
PE-LS-0592
PE-ES-1668
PE-ES-1656
PE-SB-2826
PE-TC-1035
PE-TC-1036
PE-BJ-3347

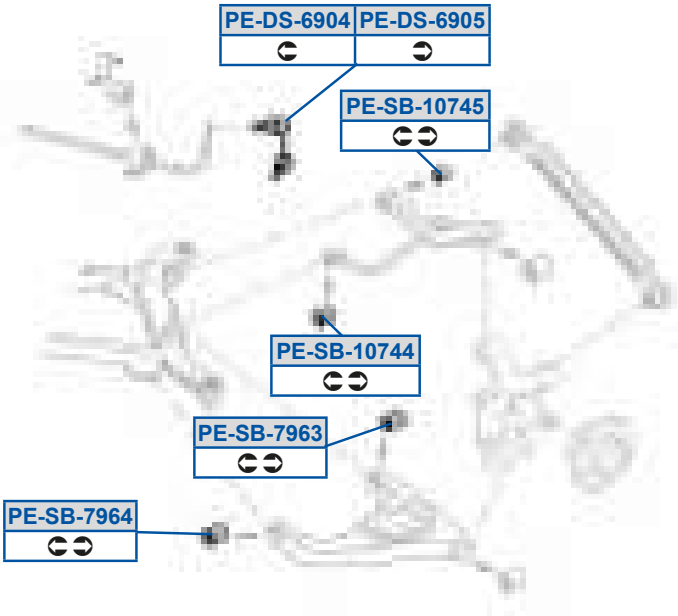
PE-DS-6904
PE-DS-6905
PE-SB-10745
PE-SB-10744
PE-SB-7963
PE-SB-7964

Y9C8>>C
B7DDDB

aS5dP598EBB
C8A8ED

aS5Oi 58FD>
AF89QE

aS5dP598EBC
C8A8CB

aS5PX5AABE
ADB79F3ADB7AB

aS5dP5>F>D
AC9ABA

aS5Rd5DG8B
C8EF8E3C8EF98

aS5dP5EGDA
C8A8CD

aS5Rd5DG8C
C8EF8F3C8EF99

aS5dP5EGDB
C8A8CA

aS5Sd59DCD
AF8EAF3AF8EBB

aS5eQ598AC
AC97E73AC97YD

aS5Sd59DDF
AF8EAE3AF8EBA

aS5eQ598AD
AC97E83AC98UD

aS5Zd58OG>
C7FEBA3C7FEBF

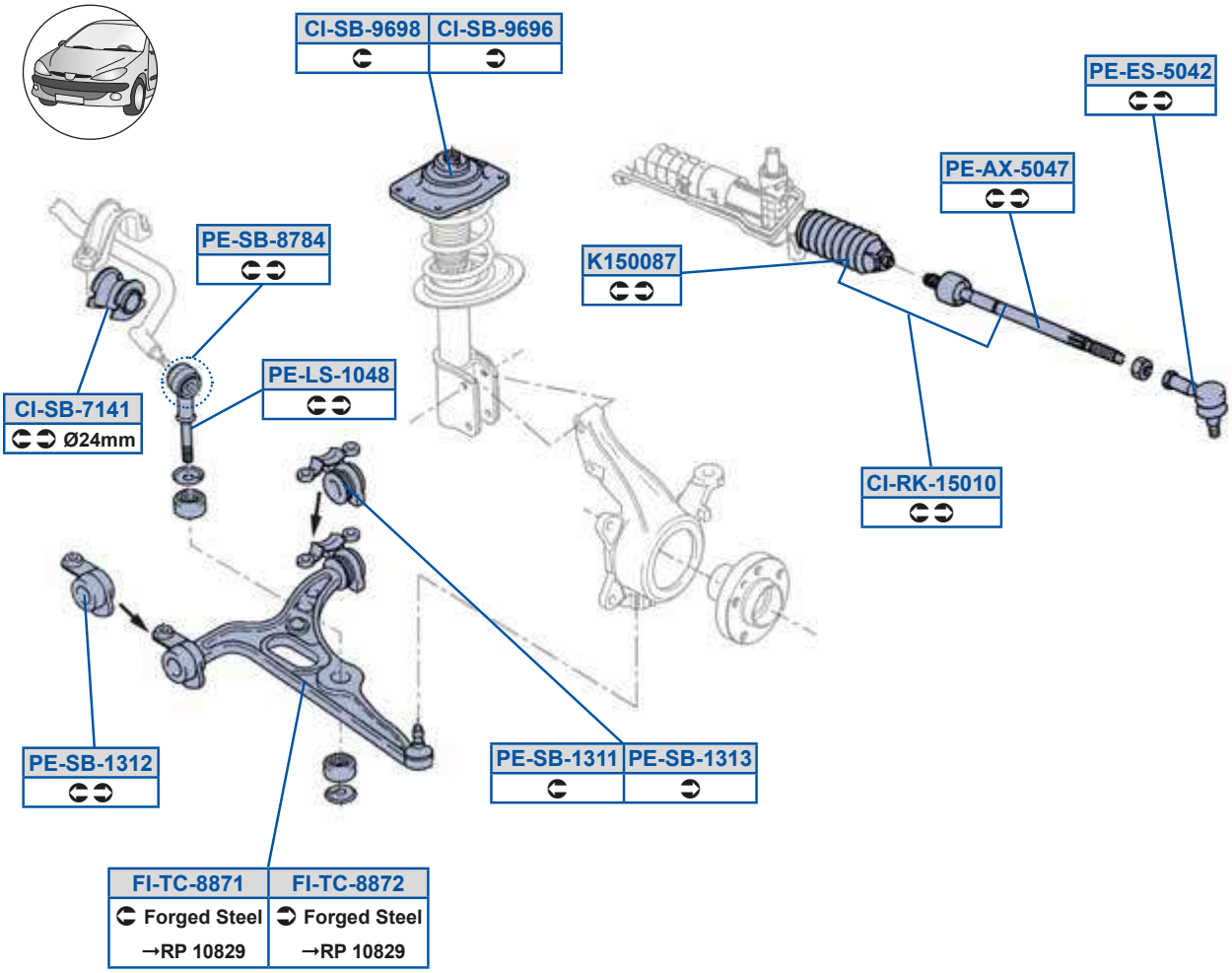
CI-SB-9698
CI-SB-9696
PE-ES-5042
PE-AX-5047
PE-SB-8784
K150087
PE-LS-1048
CI-SB-7141
Ø24mm
CI-RK-15010
PE-SB-1312
PE-SB-1311
PE-SB-1313
FI-TC-8871
Forged Steel
→RP 10829
FI-TC-8872
Forged Steel
→RP 10829

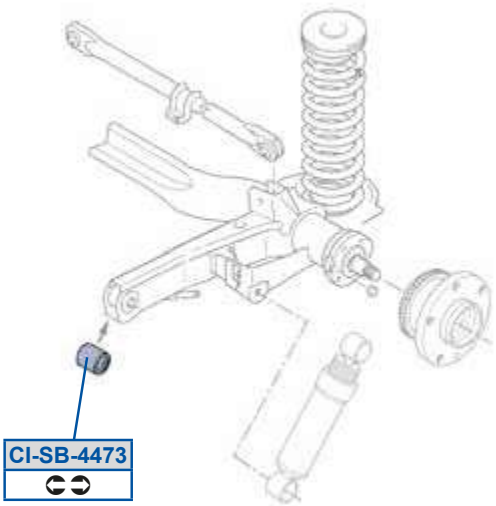
CI-SB-4473

MOOG

QW5c Y59C898
AF89OB

aS5Oi 5C8BE
AF89OB

QW5dP5BBEA
8BEGECG7F73C8C9D8

aS5Sd5C8B>
B7CG7G

QW5dP5E9B9
C7GBDG

aS5ZdP98BF
8A8EB9C7F7o3C7AFACo

QW5dP5GDGD
C7AC9G3C7ACAF

aS5dP59A99
8A7CCC87F73AC97QC /40

QW5dP5GDGF
C7AC9G3C7ACAF

aS5dP59A9>
AC98V73AC98V8

TW5eQ5FFE9
8A8DEAC7F738A8EAFG7F7

aS5dP59A9A
8A7CCC97F73AC98DB /40

TW5eQ5FFE>
8A8A7FB7F738A8DEAD7F7

aS5dP5FEFB
C7GA8C

Y9C88FE
B7DDB8

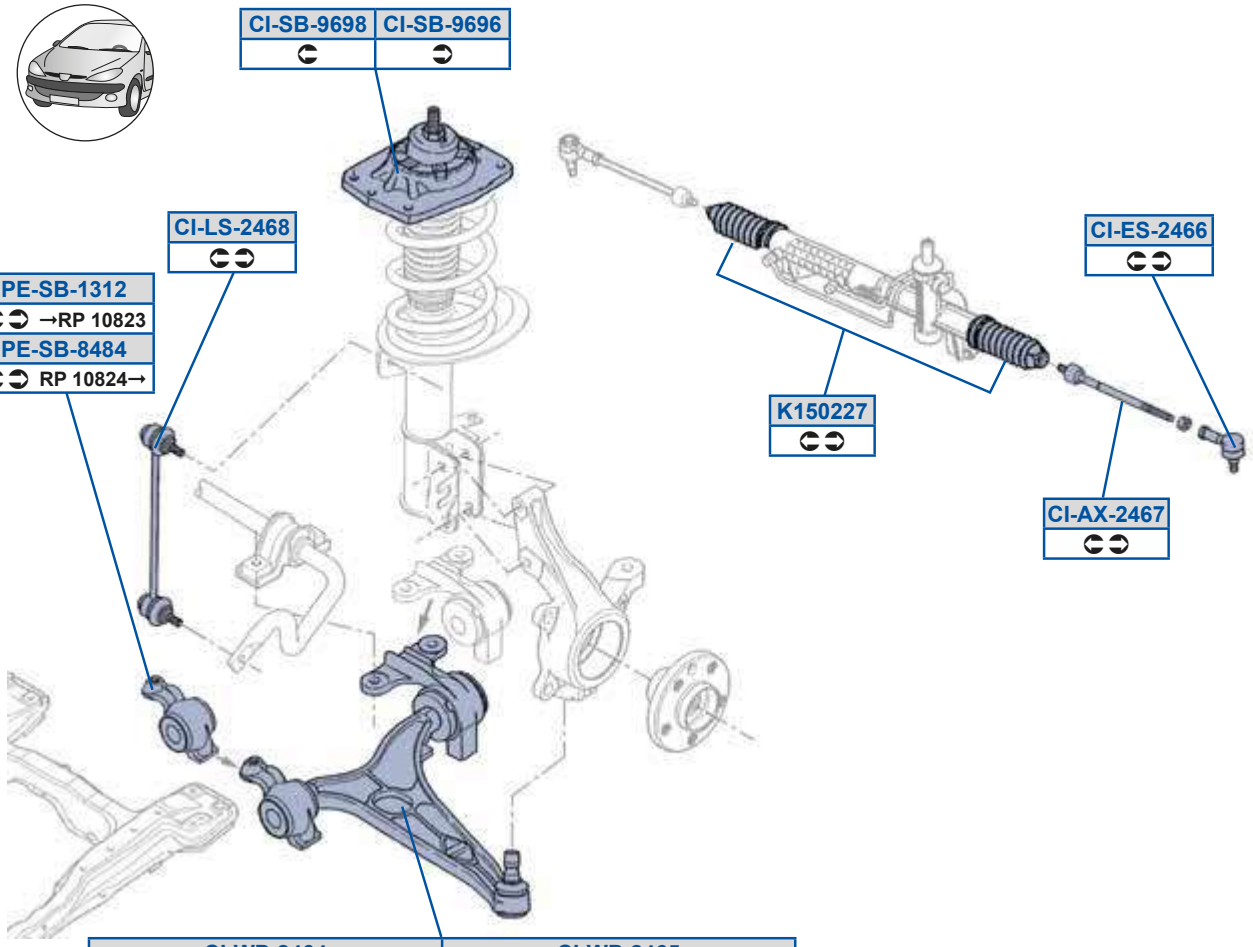

CI-WP-2464	CI-WP-2465
Ø 17mm →RP 10823	Ø 17mm →RP 10823
PE-TC-8483	**PE-TC-8482**
Ø 17mm RP 10824→	Ø 17mm RP 10824→
CI-TC-7298	**CI-TC-7299**
Ø 19mm ✓ Eng. DW10CTED4, DW12BTED4	Ø 19mm ✓ Eng. DW10CTED4, DW12BTED4

QV5Oi 5>BDE
AF89773AF89S9

QV5h a5>BDC
AC98V83AC98YD

QV5Sd5>BDD
B7CG89

Y9C8>>E
B7DDE7

QV5Zd5>BDF
C7FEC8

aS5dP59A9>
AC98V73AC98V8

QV5dP5GDGD
C7AC9G3C7ACAF

aS5dP5FBFB
AC97 7 /403AC98t 9 /40

QV5dP5GDGF
C7AC9G3C7ACAF

aS5eQ5FBF>
8D7EC87EF73AC98i D

QV5eQ5E>GF
AC97nF3AC97 F

aS5eQ5FBFA
8D7EC87DF73AC97oC

QV5eQ5E>GG
AC97nF3AC98dG

QV5h a5>BDB
AC97i D3AC98V7

988E

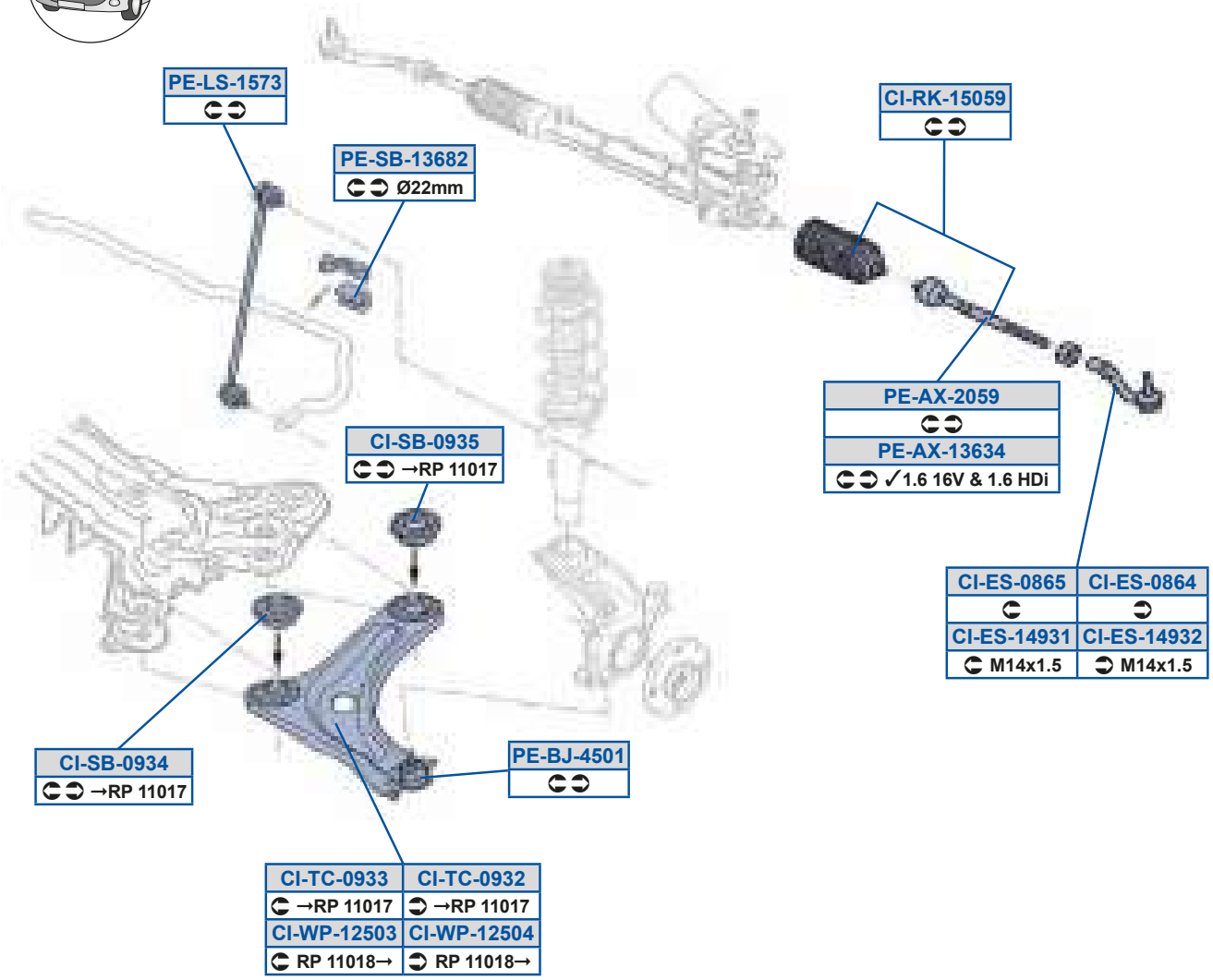

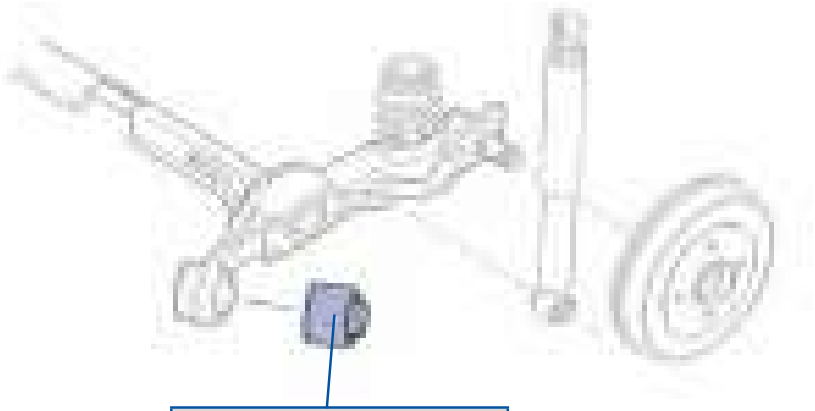

CI-SB-10785

RP 10003→

For vehicle with standard chassis

aSf US_ e

QW5Sd58FDB
AF8ECD

QW5Sd58FDC
AF8ECC

QW5Sd59BGA9
AF8ED9

QW5Sd59BGA>
AF8ED8

QW5c Y59C8CG
AF89S8

QW5dP58GAB
AC9AGF

QW5dP58GAC
AC9AOO

QW5dP598EFC
C8A8QD

QW5e Q58GA>
AC98VD3AC98X8

QW5e Q58GAA
AC97ZB3AC97i 8

QW5h a59>C8A
AC97dC3AC97i 8

QW5h a59>C8B
AC98I A

aS5Oi 59ADAB
AF89SD

aS5Oi 5>8CG
AF89S8

aS5PX5BC89
ADB7CG3ADB7DD

aS5Zd59CEA
C7FEBC3C7FECG

aS5dP59ADF>
C7GBO9

aSf US_ e

; 88F	8A79A		

>88F

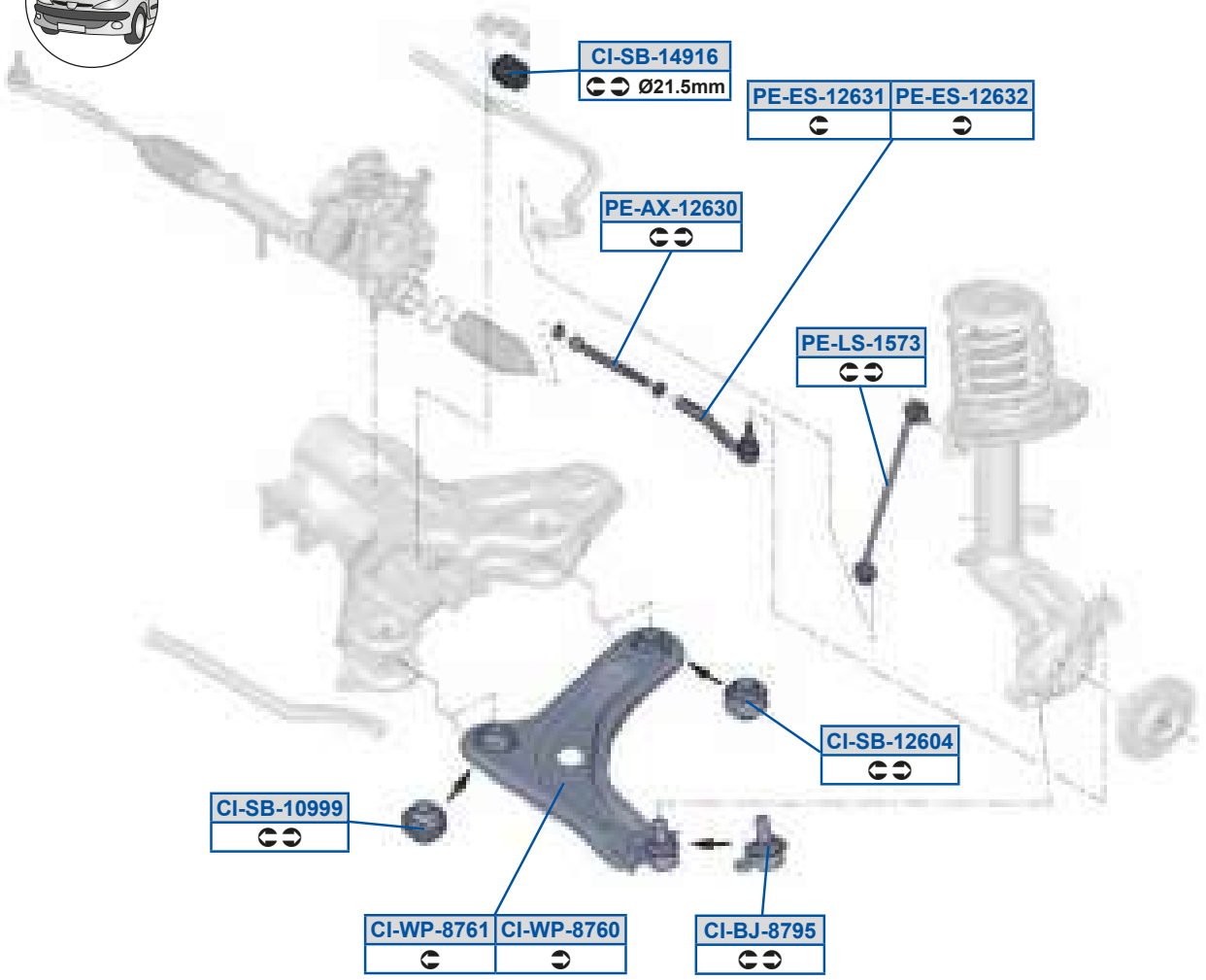

aSf US_ e

MOOG

QV5PX5FEGC
ADB7EE

aS5Sd59>DA>
8D7F79C9F7

QV5dP598GGG
AC9ASO

aS5Zd59CEA
C7FEBC3C7FECG

QV5dP59>D8B
AC9ASQ3AC9ASS

QV5dP59BG9D
GDEBEDAF7

QV5h a5FED8
AC98oG3GF7A9FDBF7

QV5h a5FED9
AC97 E3GF7A9FDCF7

aS5Oi 59>DA8
8D7F79CAF7

aS5Sd59>DA9
8D7F79C8F7

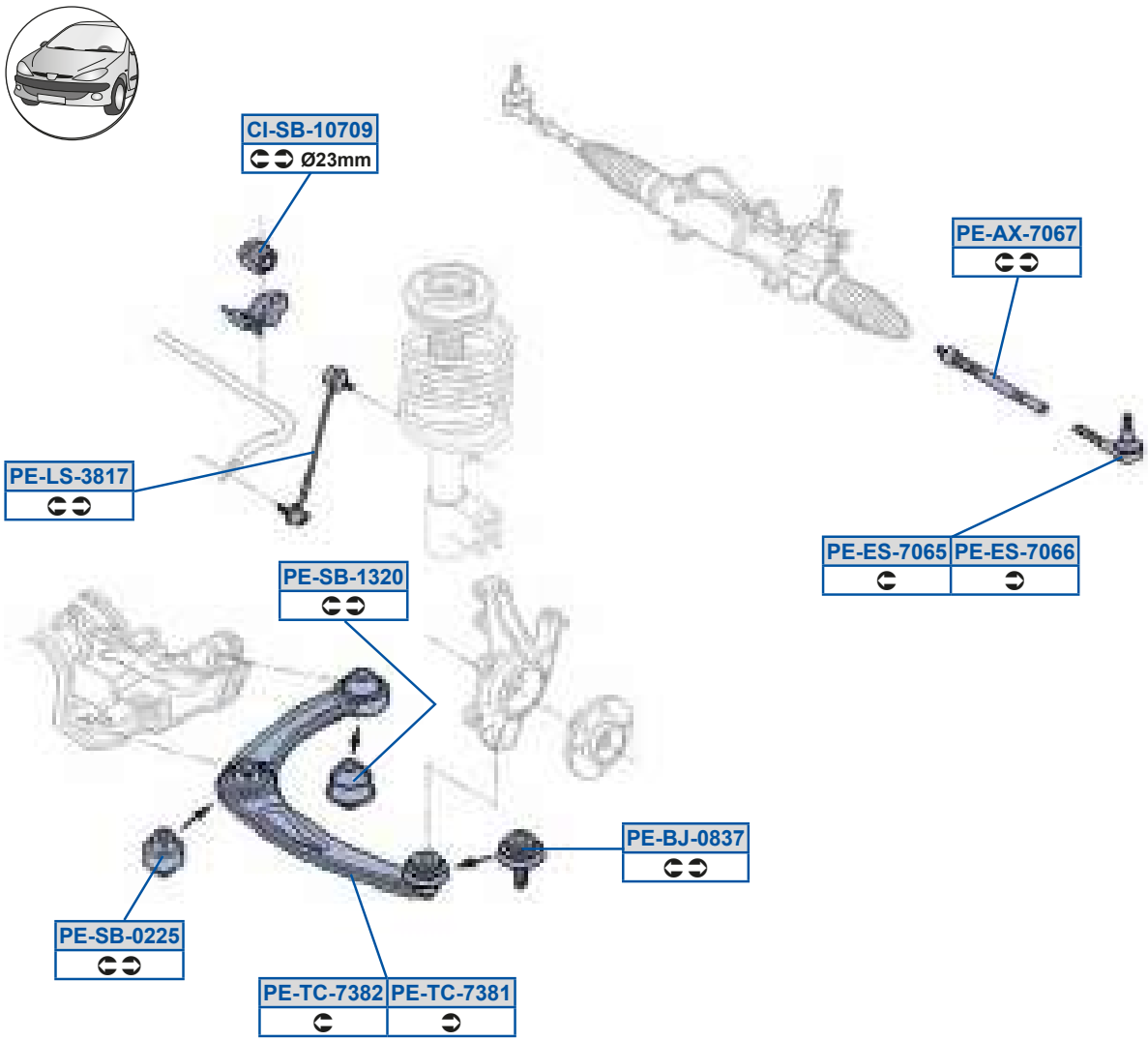
CI-SB-10709
Ø23mm
PE-AX-7067
PE-LS-3817
PE-ES-7065
PE-ES-7066
PE-SB-1320
PE-BJ-0837
PE-SB-0225
PE-TC-7382
PE-TC-7381

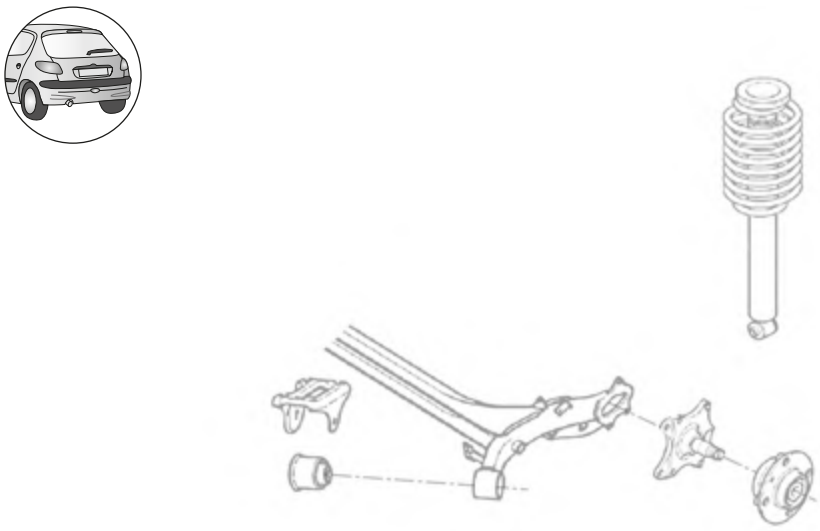

QW8dP598E8G
C7GBSA

aS5eQ5EAF9
AC98nA

aS5Oi 5E8DE
AF89T9

aS5eQ5EAF>
AC97 9

aS5PX58FAE
ADB7CA3ADB7D7

aS5Sd5E8DC
AF8EED3AF8EFG

aS5Sd5E8DD
AF8EEC3AF8EFF

aS5Zd5AF9E
C7FEC73C7FECE

aS5dP58>>C
AC9AG83AC9AOX

aS5dP59A>8
AC9AEE3AC9AG9

aSf US_ e

B88E 0Uar 1	8; 78E		

B88E

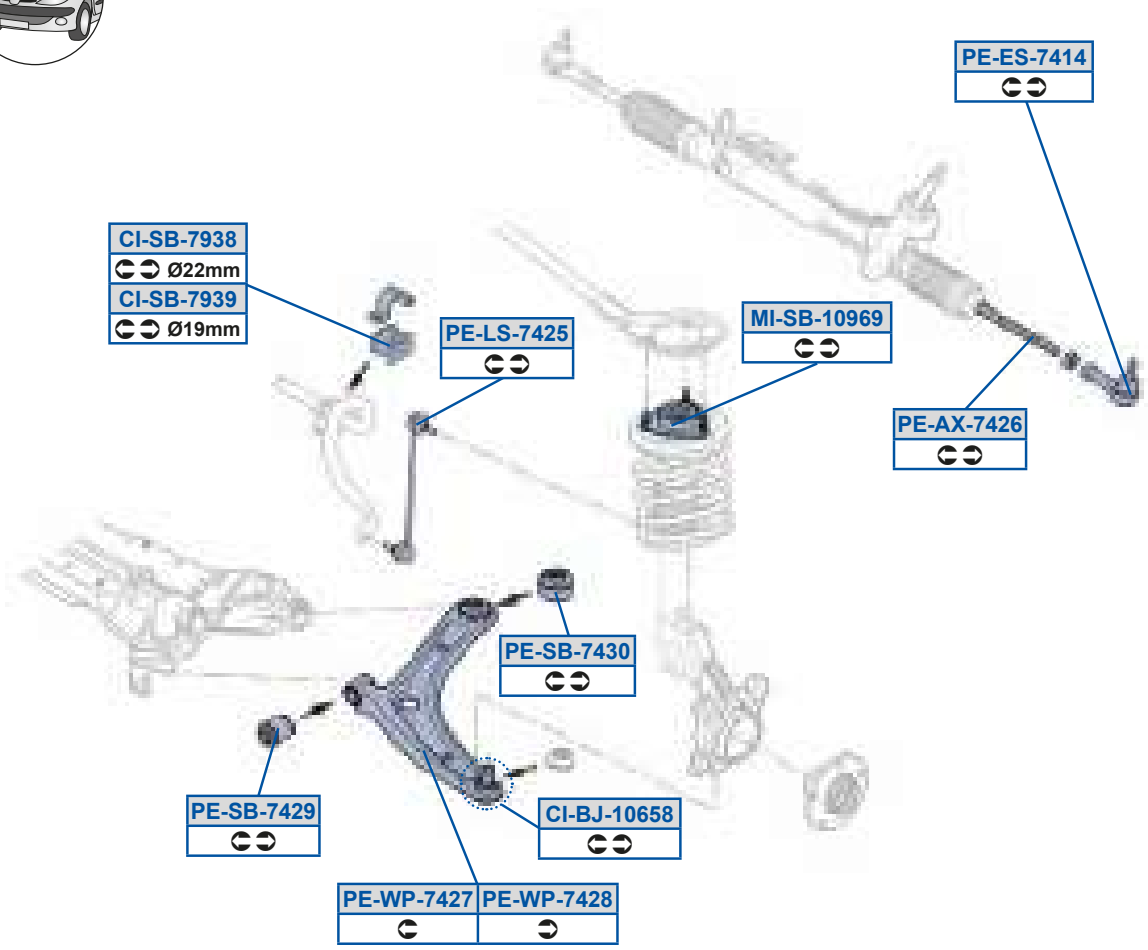

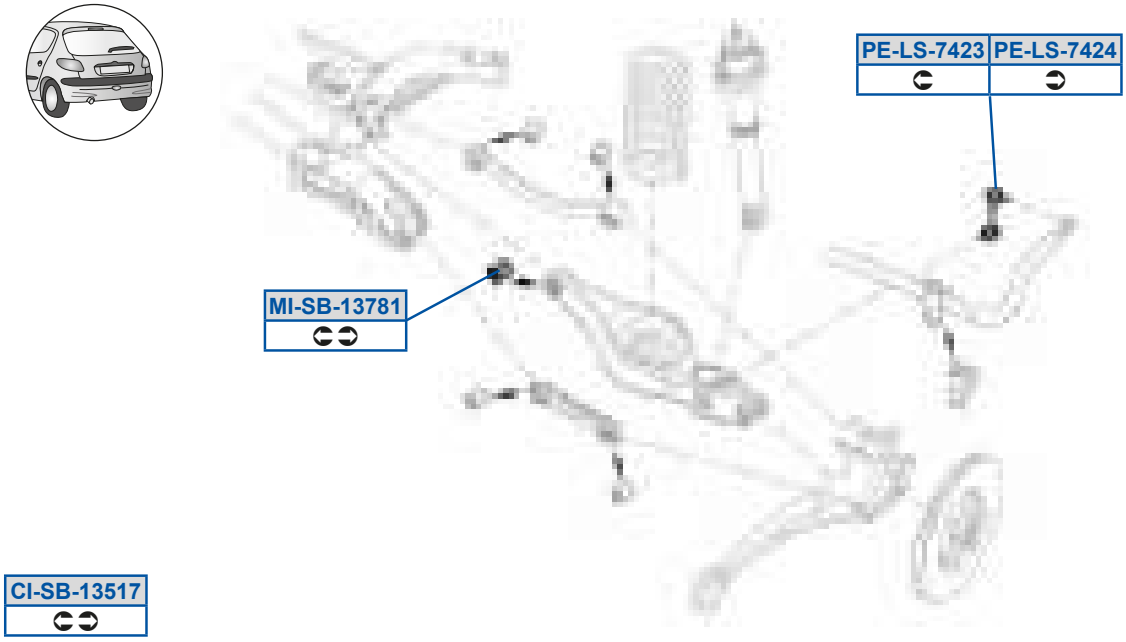

aSf US_ e

MOOG

QV5PX598DCF
AC98n /40BAC9 7 /40

QV5dP59AC9E
C8A8VC

QV5dP5EGAF
C7GBQD

QV5dP5EGAG
C8E9CF

[V5dP598GDG

[V5dP59AEF9
C8A8U8

aS5Oi 5EB>D
AF89T8

aS5Sd5EB9B
AF8EEB

aS5Zd5EB>A
C8EFBF

aS5Zd5EB>B
C8EFBG

aS5Zd5EB>C
C7FECF

aS5dP5EB>G
AC97 73AC97 G

aS5dP5EBA8
8D7GG87DF73AC97 7

aS5h a5EB>E
AC97 73AC97 G

aS5h a5EB>F
AC98n83AC98 7

B88F	8C79;		

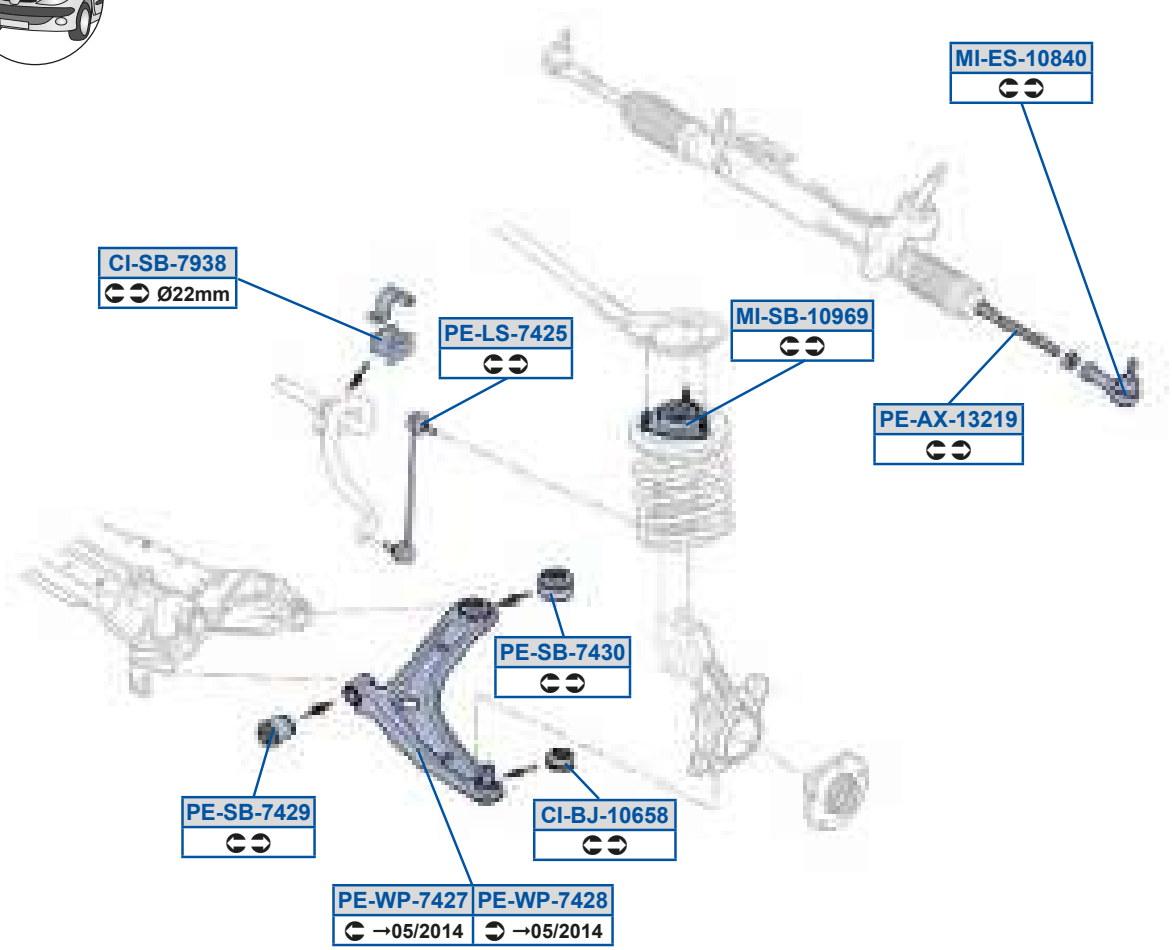
MI-ES-10840
CI-SB-7938
Ø22mm
PE-LS-7425
MI-SB-10969
PE-AX-13219
PE-SB-7430
PE-SB-7429
CI-BJ-10658
PE-WP-7427
→05/2014
PE-WP-7428
→05/2014

QV5PX598DCF
AC98n /4CBAC9 7 /40

QV5dP5EGAF
C7GBQD

[V5Sd598FB8

[V5dP598GDG

aS5Oi 59A>EG
8D7FCA98F7

aS5Zd5EB>C
C7FECF

aS5dP5EB>G
AC97 73AC97 G

aS5dP5EBA8
8D7GG87DF73AC97 7

aS5h a5EB>E
AC97 73AC97 G

aS5h a5EB>F
AC98n83AC98 7

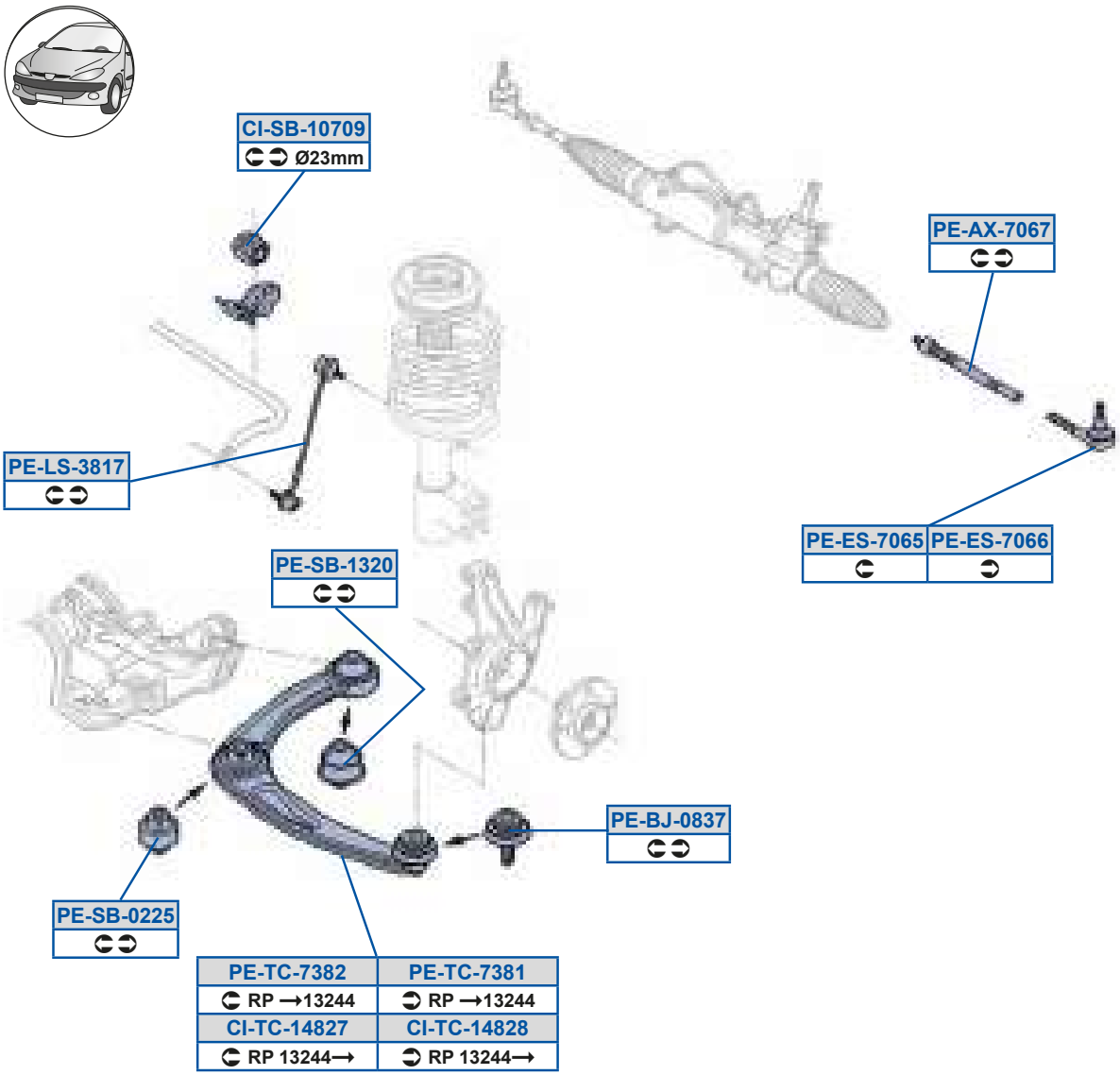
CI-SB-10709
Ø23mm
PE-AX-7067
PE-LS-3817
PE-ES-7065
PE-ES-7066
PE-SB-1320
PE-BJ-0837
PE-SB-0225
PE-TC-7382
RP →13244
PE-TC-7381
RP →13244
CI-TC-14827
RP 13244→
CI-TC-14828
RP 13244→

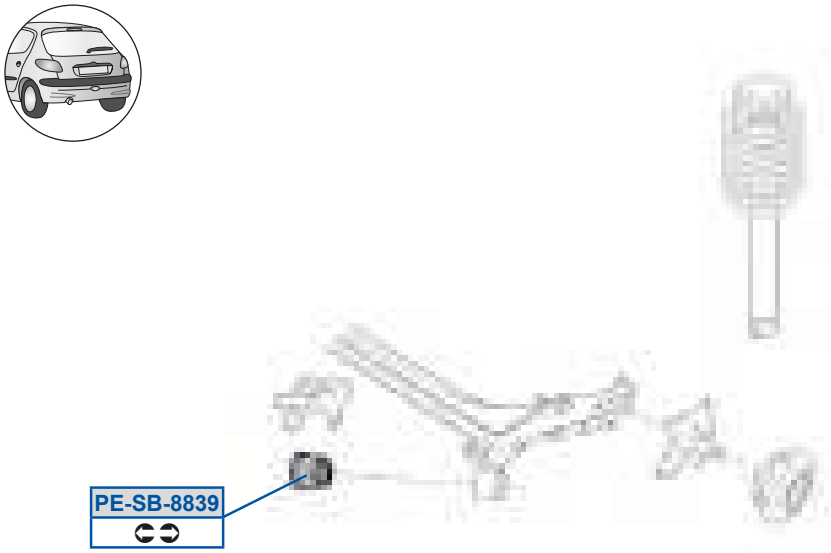
PE-SB-8839

QW5dP598E8G
C7GBSA

aS5dP58>>C
AC9AG83AC9AOX

QW5eQ59BF>E
GF7CD7EBF7

aS5dP59A>8
AC9AEE3AC9AG9

QW5eQ59BF>F
GF7CD7EAF7

aS5dP5FFAG
C8A8T9

aS5Oi 5E8DE
AF89T9

aS5eQ5EAF9
AC98nA

aS5PX58FAE
ADB7CA3ADB7D7

aS5eQ5EAF>
AC97 9

aS5Sd5E8DC
AF8EED3AF8EFG

aS5Sd5E8DD
AF8EEC3AF8EFF

aS5Zd5AF9E
C7FEC73C7FECE

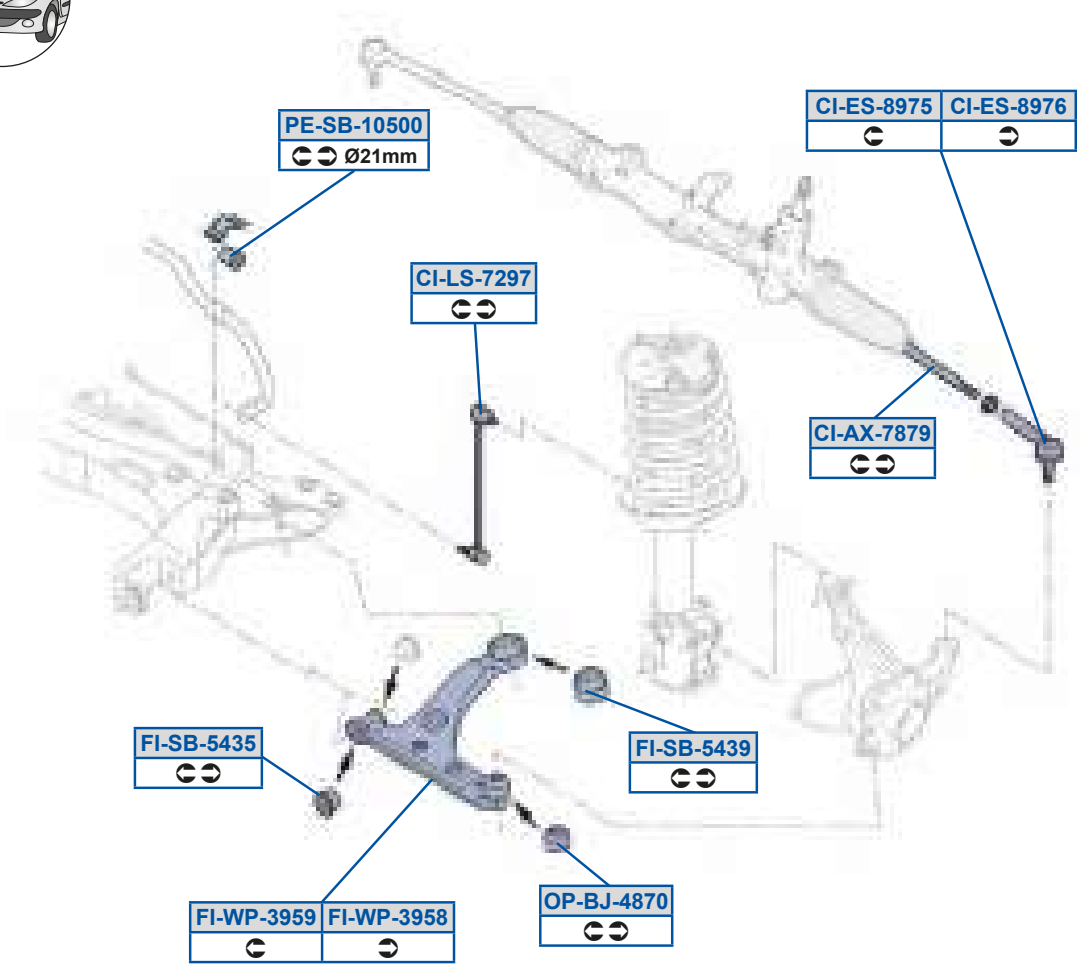
PE-SB-10500
Ø21mm
CI-ES-8975
CI-ES-8976
CI-LS-7297
CI-AX-7879
FI-SB-5435
FI-SB-5439
FI-WP-3959
FI-WP-3958
OP-BJ-4870

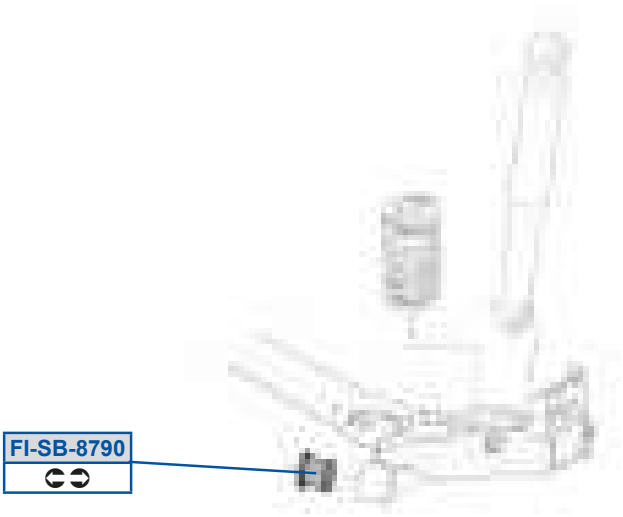
FI-SB-8790

QVWOi 5EFEG
B778EE3B778YD

TVWh a5AGCG
AC97 A3AC97 B

QVWSd5FGEC
AF8EFB3AF8EFD

_ a5PX5BFE8
AC97DE3AC97FE

QVWSd5FGED
AF8EFC3AF8EFE

aS5dP598C88
C7GBSC

QVWZd5E>GE
C7FEDC3C7FEE7

TVWdP5CBAC
AC9AF73CCE7A9A9

TVWdP5CBAG
CCE77EC8

TVWdP5FEG8
C8A8UF

TVWh a5AGCF
AC98oD3AC98 C

aSf US_ e

P_i Sc P Q A8Z1	8A7GB 8B78;	P_i Sc P Q BB1	9; 789
P_i Sc P Q A8a1	8A7GB 8B78;	P_i Sc P Q BB4I r 1	9; 789
P_i Sc a t y 7QÉt é Q BB1	9; 789	P_i Sc a t y 7QÉt é Q Qer 1	8A7GB 8B78;

CI-SB-9684	CI-SB-9682
02/94→04/02	02/94→04/02
CI-SB-10082	CI-SB-10083
04/02→	04/02→

FI-AX-7528

FI-ES-7529
→04/02 Ø 14.4mm
CI-ES-2460
04/02→ Ø 17mm

K150119
K150118

PE-SB-8784

CI-LS-3267

PE-SB-1137

PE-SB-1138
→04/02

FI-BJ-7530	FI-BJ-0512
→04/02 ✓ 1.0T, 1.4T Ø 16mm	04/02→ ✓ 1.0T, 1.4T Ø 18mm
FI-BJ-7531	FI-BJ-0513
→04/02 ✓ 1.8T Ø 18mm	04/02→ ✓ 1.8T Ø 20mm

FI-WP-0109	FI-WP-0108
→04/02 ✓ 1.0T, 1.4T ✓ Ø 16mm	→04/02 ✓ 1.0T, 1.4T ✓ Ø 16mm
FI-WP-0111	FI-WP-0110
→04/02 ✓ 1.8T ✓ Ø 18mm	→04/02 ✓ 1.8T ✓ Ø 18mm
FI-WP-3840	FI-WP-0118
04/02→ ✓ 1.0T, 1.4T ✓ Ø 18mm	04/02→ ✓ 1.0T, 1.4T ✓ Ø 18mm
CI-WP-3876	CI-WP-3877
04/02→ ✓ 1.8T ✓ Ø 20mm	04/02→ ✓ 1.8T ✓ Ø 20mm

CI-SB-7966

CI-SB-7967

MOOG

QV5Sd5>BD8
B78FS7

QV5h a5AFED
8D7EA78BF73AC97Z8

TV5h a5898F
AC98DC3AC98V9

aS5dP599AE
8A7FDGB7F73AC9AGB

QV5Zd5A>DE
C7FEAE

QV5h a5AFEE
8D7EA78AF73AC98VA

TV5h a5898G
AC97GC3AC97Z7

aS5dP599AF
AC9AGA

QV5dP5988F>
C7A8EF3C7AFDF

TV5Oi 5EC>F
B77D9B3B78FOB

TV5h a58998
AC98DD3AC98VA

aS5dP5FEFB
C7GA8C

QV5dP5988FA
C7A8EG

TV5PX58C9>
8AA8DB77F73ADB7CC

TV5h a58999
AC97GD3AC97Z8

QV5dP5EGDD
C8A8E9

TV5PX58C9A
8AA8DB87F73ADB7CB

TV5h a5899F
AC98V93AC98XA

QV5dP5EGDE
8A7BDB87F73C8A8EA

TV5PX5ECA8
8A79ADF7F73ADB7A9

TV5h a5AFB8
AC97Z73AC97dA

QV5dP5GDF>
C7AF8G3C7AFB9

TV5PX5ECA9
8A77BEA7F73ADB7AA

Y9C899F
B78FOC3B7DDA8

QV5dP5GDFB
C7AF8F3C7AFB8

TV5Sd5EC>G
B78FOA3B78FVB

Y9C899G
B77D993B78F8C

aSf US_ e

P_i Sc P	8B78D	P_i Sc P	8B78D
P_i Sc a t y 7QÉt é	8B78D		

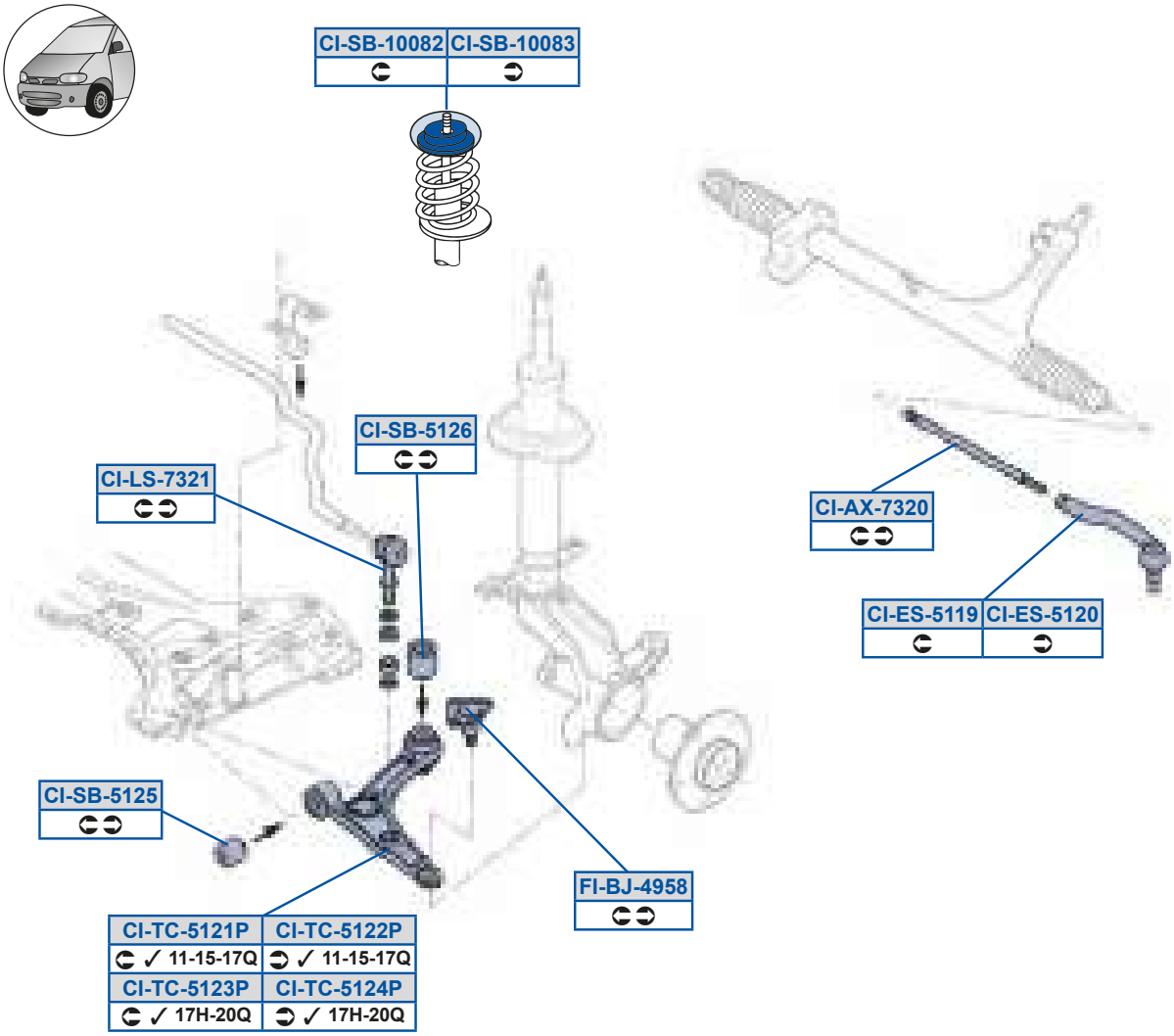

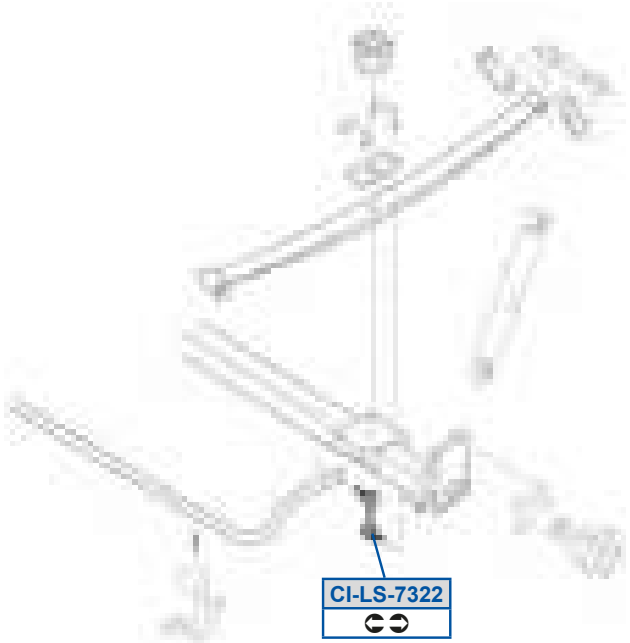

MOOG

QV5Oi 5EA>8
B778SB3B778SBo8

QV5dP5C9>D
AC97o7 /4CBAC97o8 /4O

QV5Sd5C99G
8D87GEDBF73AF8EDG

TV5PX5BGCF
ADB7DE3ADB7ED

QV5Sd5C9>8
8D87GEDAF73AF8EE7

QV5Zd5EA>9
8ACECE97F7

QV5Zd5EA>>
C8E7TC3C8E7TD

QV5dP5988F>
C7A8EF3C7AFDF

QV5dP5988FA
C7A8EG

QV5dP5C9>C
AC97o7 /4CBAC97o8 /4O

P v W

aSf US_e

aSf US_ e

Si aSce Q ; B1	987GC 9; 78D	Si aSce P Q ; ; 1	8E7GC 9; 78D
Si aSce a t y 7QÉt é Q ; A1	9; 7GC 9878D		

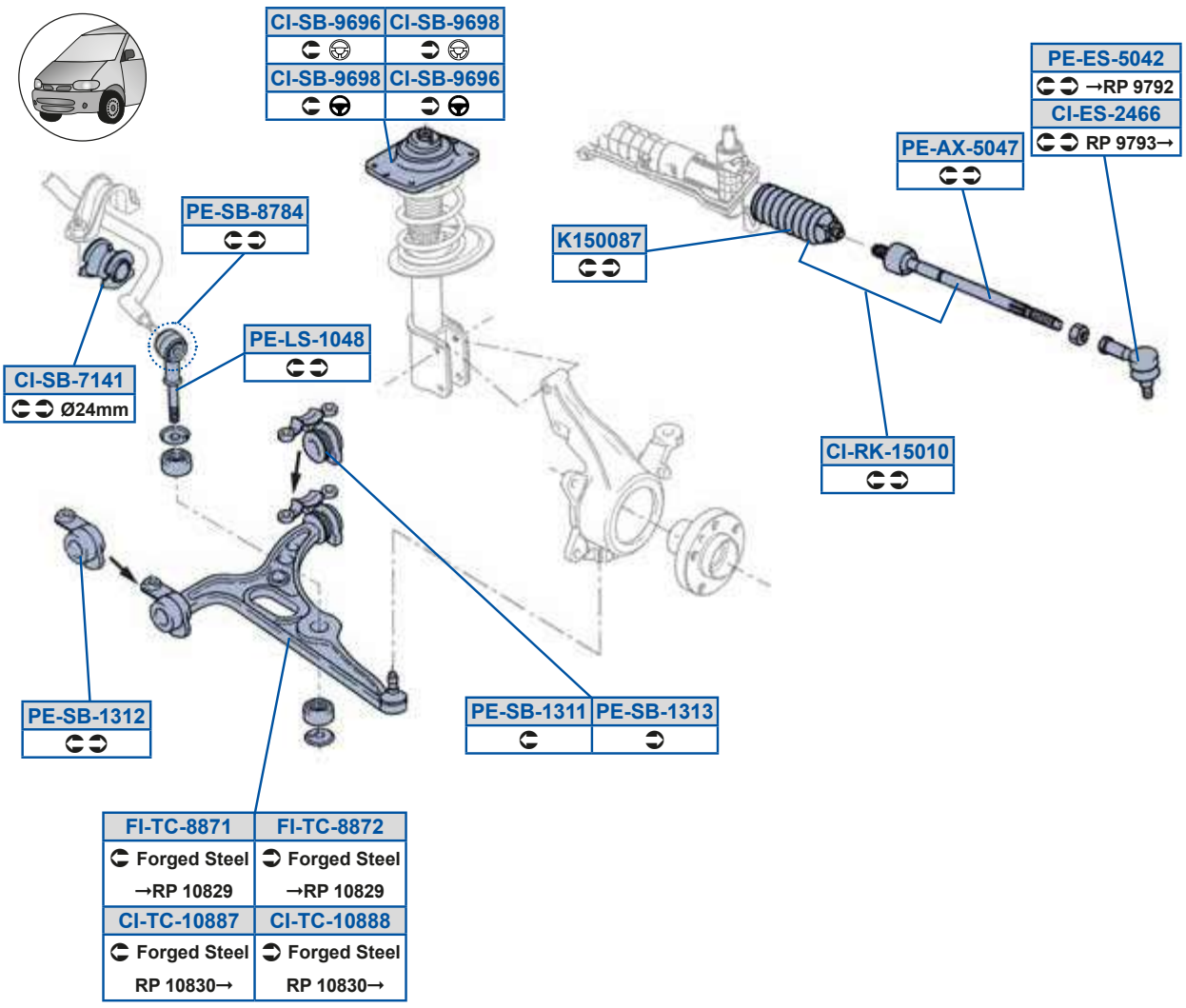

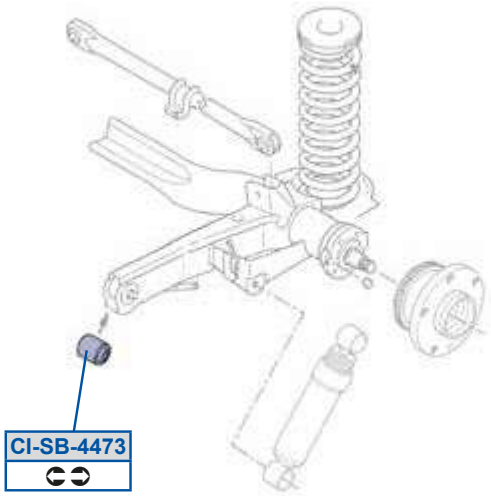

MOOG

QW5Sd5>BDD
B7CG89

TW5eQ5FFE9
8A8DEAC7F738A8EAFG7F7

aS5dP59A9A
8A7CCC97F73AC98DB/40

QW5cY59C898
AF89OB

TW5eQ5FFE>
8A8A7FB7F738A8DEAD7F7

aS5dP5FEFB
C7GA8C

QW5dP5BBEA
8BEGECG7F73C8C9D8

Y9C88FE
B7DDB8

QW5dP5E9B9
C7GBDG

aS5Oi 5C8BE
AF89OB

QW5dP5GDGD
C7AC9G3C7ACAF

aS5Sd5C8B>
B7CG7G

QW5dP5GDGF
C7AC9G3C7ACAF

aS5Zd598BF
8A8EB9C7F7o3C7AFACo

QW5eQ598FFE
AC97oD

aS5dP59A99
8A7CCC87F73AC97QC/40

QW5eQ598FFF
AC97i E

aS5dP59A9>
AC98V73AC98V8

aSf US_ e

Si aSce P 0gTA0r 4gTAf r 4gTAi r 1	8978E	Si aSce a t y 70Ét é	8978E
Si aSce ex xx 0gTAgr 1	8978E		

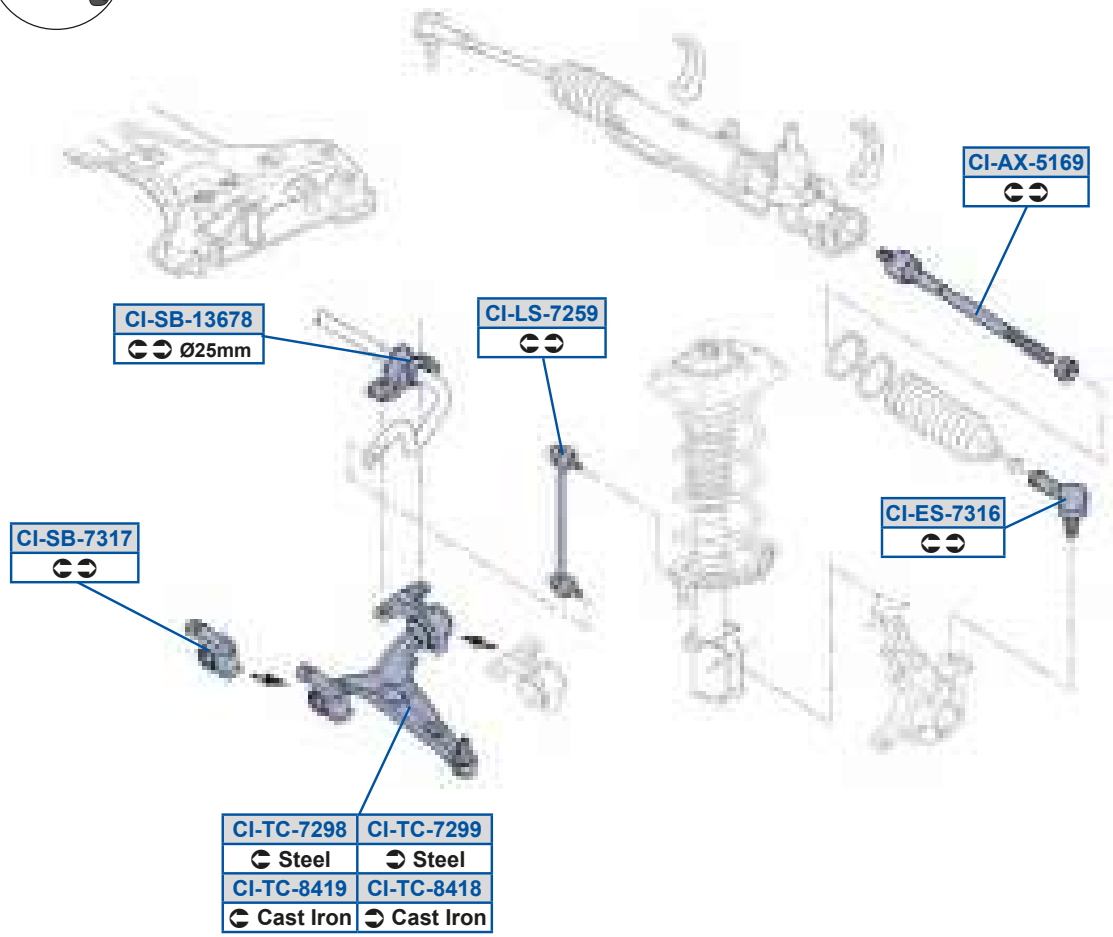

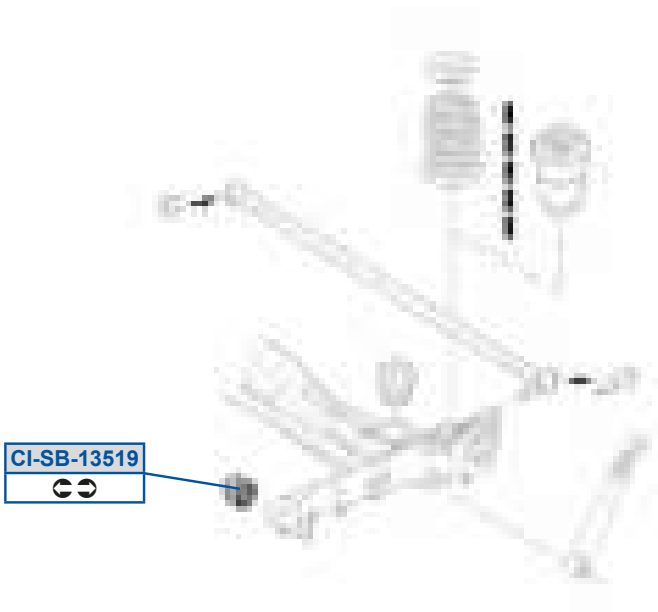

MOOG

QV5OI 5C9DG
AF89T7

QV5Sd5EA9D
AF8EEA3AF8EOC

QV5Zd5E>CG
C7FECD

QV5dP59AC9G
C8A8TB

QV5dP59ADEF
C7F8I A/40

QV5dP5EA9E
AC97nF/40 3AC98dG/40

QV5eQ5E>GF
AC97nF3AC97 F

QV5eQ5E>GG
AC97nF3AC98dG

QV5eQ5FB9F
AC98dG3AC98o7

QV5eQ5FB9G
AC97nF3AC97 F

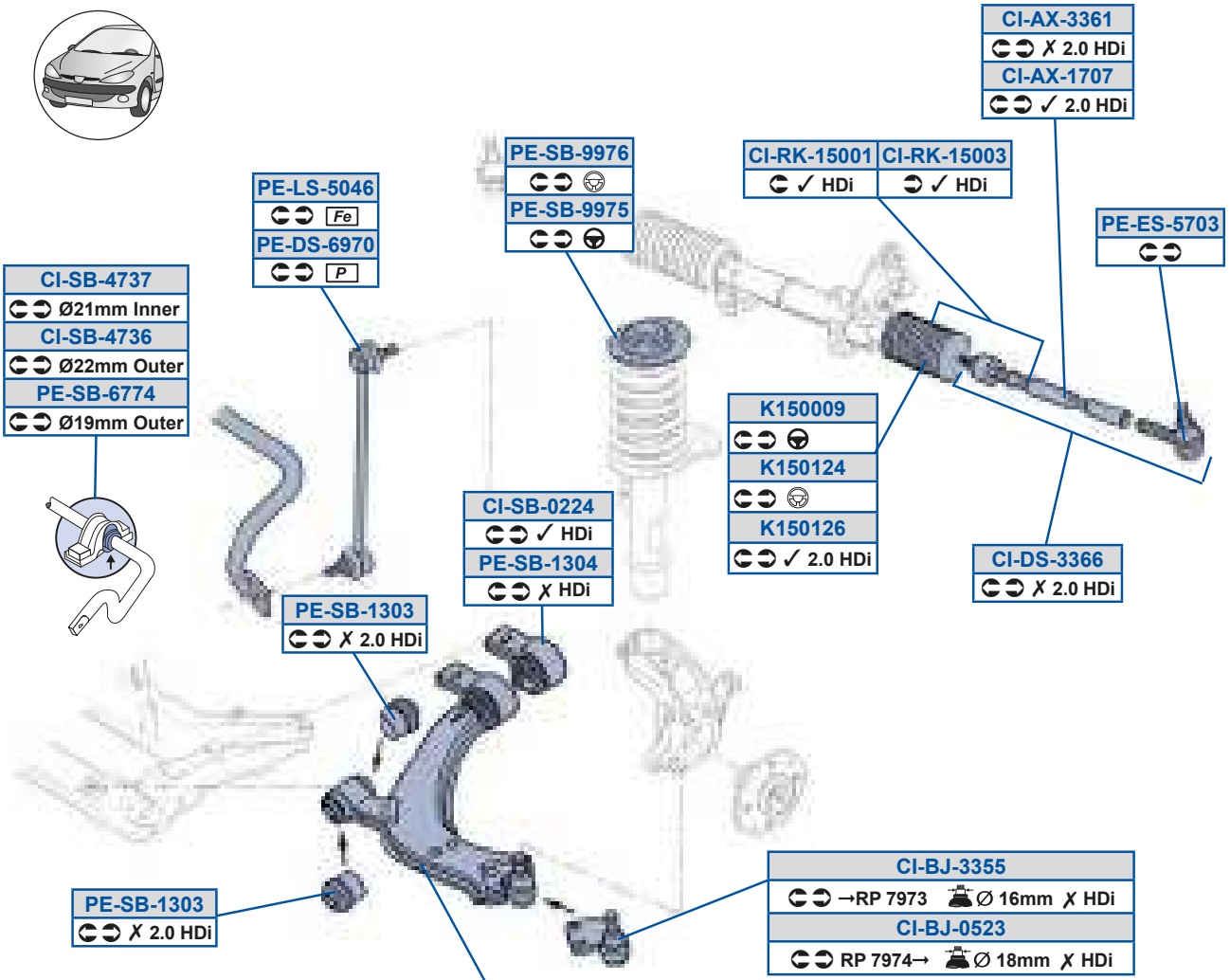

CI-SB-7974

PE-SB-8840

MOOG

QW5Oi 59E8E
AF8977773AF89QD

QW5dP5BEAD
C7GBEE

QW5h a59AB8>
AC98E93AC98EA

aS5dP59A8B
AC9AD93AC9AEC

QW5Oi 5AAD9
AF89Q73AF89QD

QW5dP5BEAE
C7GBDC

Y9C888G
B7DD8D3B7DD97

aS5dP5DEEB
C7GBDD

QW5PX58C>A
ADB7C73ADB7C8

QW5dP5EGEB
C8C9D9

Y9C89>B
B7DDBA3B7DDBB

aS5dP5FFB8
C8A8BE

QW5PX5AACC
ADB7AF3ADB7B9

QW5h a58D88
AC98773AC98SB

Y9C89>D
B7DD8D3B7DD99

aS5dP5GGEC
C7AC9A3C7AC9E

QW5Rd5AADD
AF89Q73GBE8777GDC

QW5h a58D89
AC97VB3AC97VC

aS5Rd5DGE8
C7FEAF3C7FEB9

aS5dP5GGED
C7AC9A3C7AF99

QW5c Y59C889
AF89Q73AF89QD

QW5h a58E9A
AC97VG3AC97XA

aS5Sd5CE8A
AF8E7G/4C3AF8E87

QW5c Y59C88A
AF89Q73AF89QD

QW5h a58E9B
AC98SG3AC98TA

aS5Zd5C8BD
C7FEAB3C7FEAG

QW5dP58>>B
AC9AFA

QW5h a59AB89
AC97083AC9709

aS5dP59A8A
GD887BFA

aSf US_ e

aOce] Sc P	8B78F	aOce] Sc ex xx	8B78F

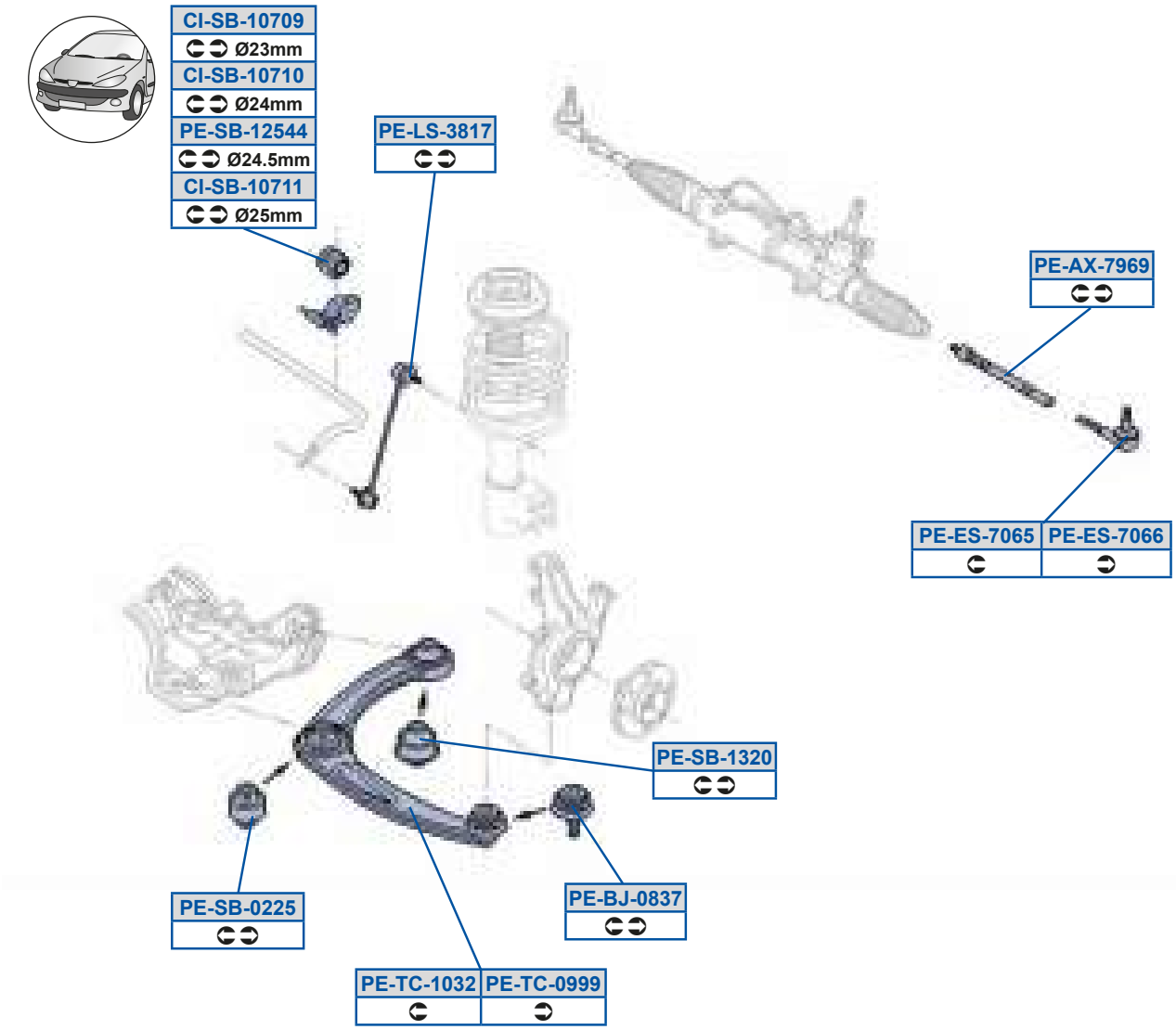

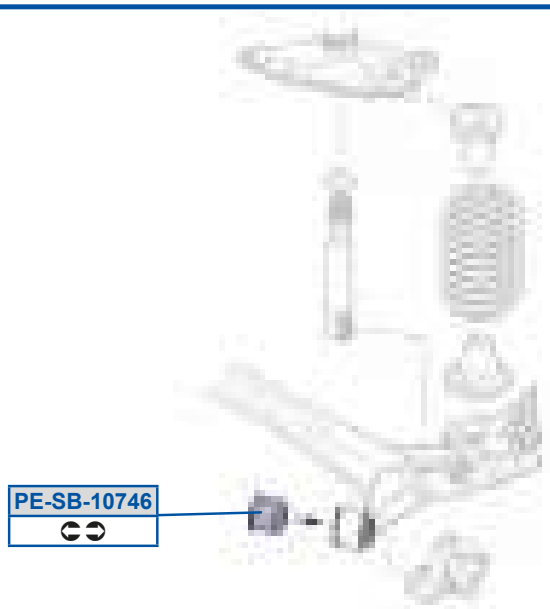

QW5dP598E8G
C7GBSA

QW5dP598E98
C7GBSB

QW5dP598E99
C7GBSE

aS5Oi 5EGDG
AF89TB

aS5PX58FAE
ADB7CA3ADB7D7

aS5Sd5E8DC
AF8EED3AF8EFG

aS5Sd5E8DD
AF8EEC3AF8EFF

aS5Zd5AF9E
C7FEC73C7FECE

aS5dP58>>C
AC9AG83AC9AOX

aS5dP598EBD
C8A8V8

aS5dP59>CBB
C7GBSD

aS5dP59A>8
AC9AEE3AC9AG9

aS5eQ58GGG
AC98UF3AC98YA

aS5eQ598A>
AC97YF3AC97o9

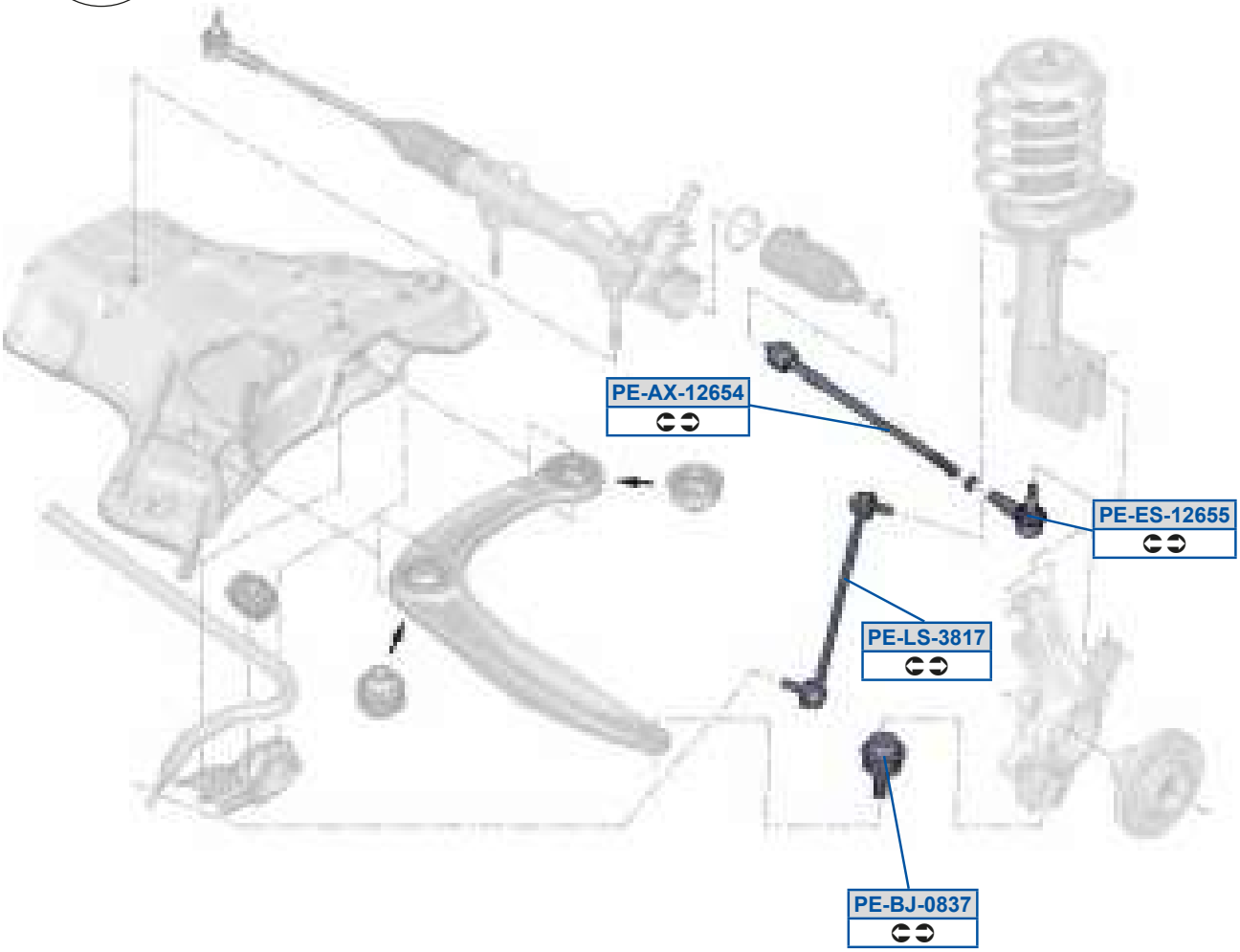
PE-AX-12654
PE-ES-12655
PE-LS-3817
PE-BJ-0837

aS5Oi 59>DCB
AF89TE

aS5PX58FAE
ADB7CA3ADB7D7

aS5Sd59>DCC
AF8EGB

aS5Zd5AF9E
C7FEC73C7FECE

a_ c dQVS

G99 0GGD1	8G7GE 8F78C	G99 Q x áu x 0GGD1	8; 7GF 8F78C
P_i deSc 0GFD1	8G7GD 9; 78B		

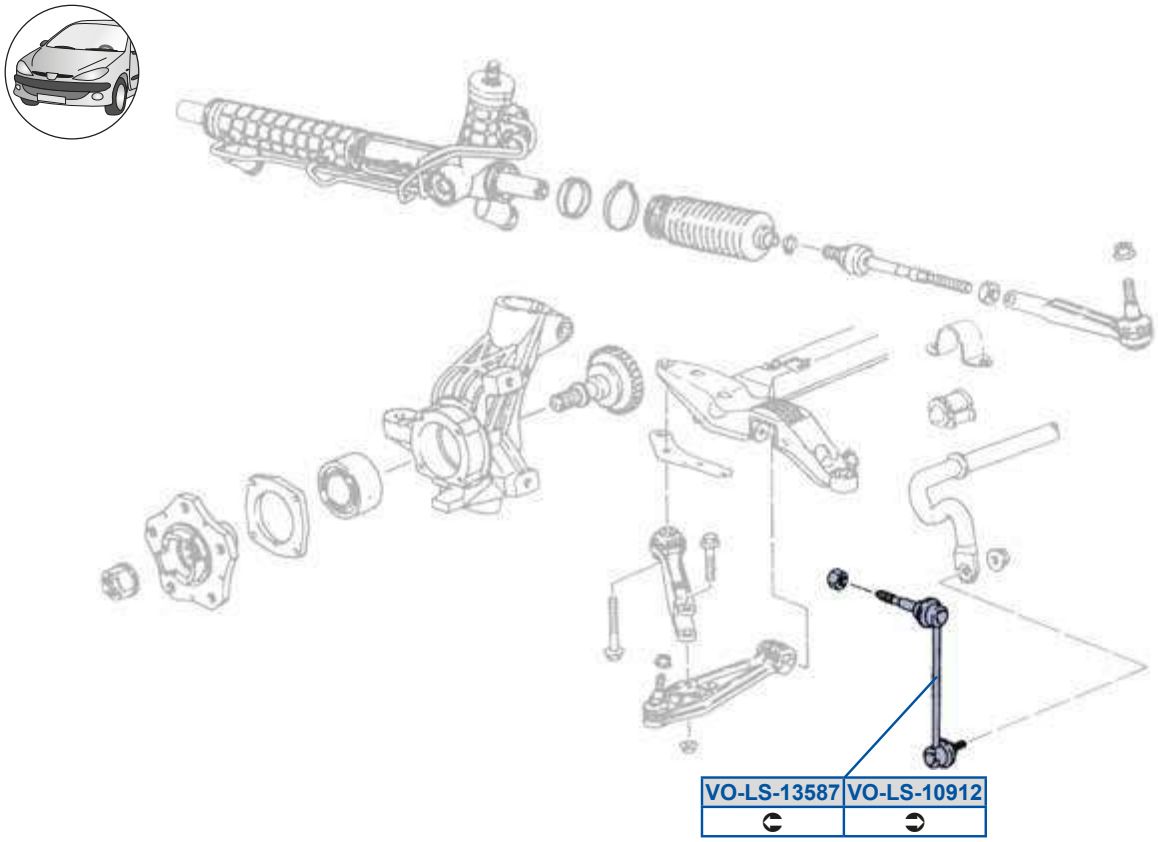

g_ 5Zd598G9>

GGDABA7E7793GGDABA7E77A

g_ 5Zd59ACFE

GGDABA7DG793GGDABA7DG7A

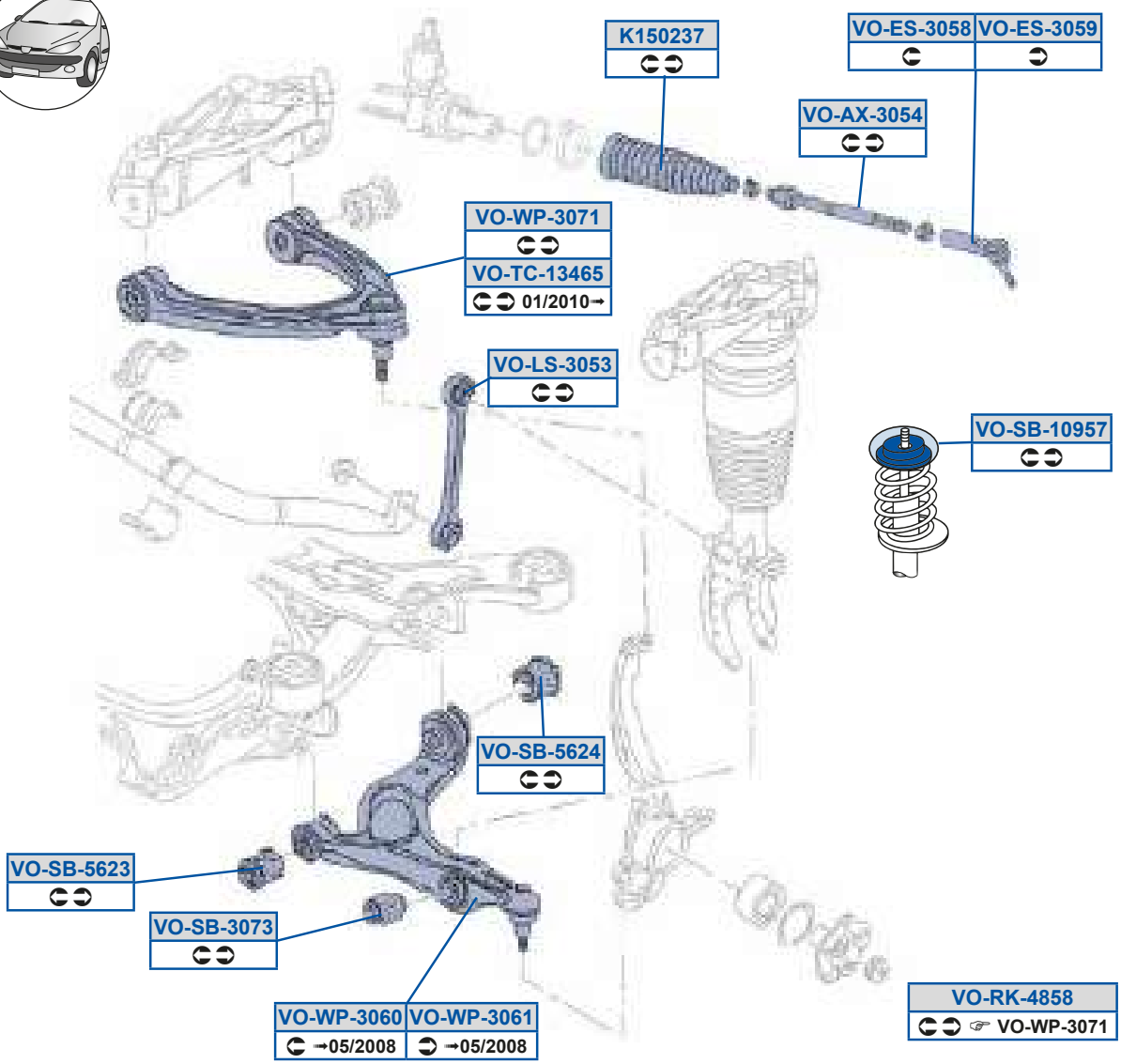
K150237
VO-ES-3058
VO-ES-3059
VO-AX-3054
VO-WP-3071
VO-TC-13465
01/2010→
VO-LS-3053
VO-SB-10957
VO-SB-5624
VO-SB-5623
VO-SB-3073
VO-WP-3060
→05/2008
VO-WP-3061
→05/2008
VO-RK-4858
VO-WP-3071

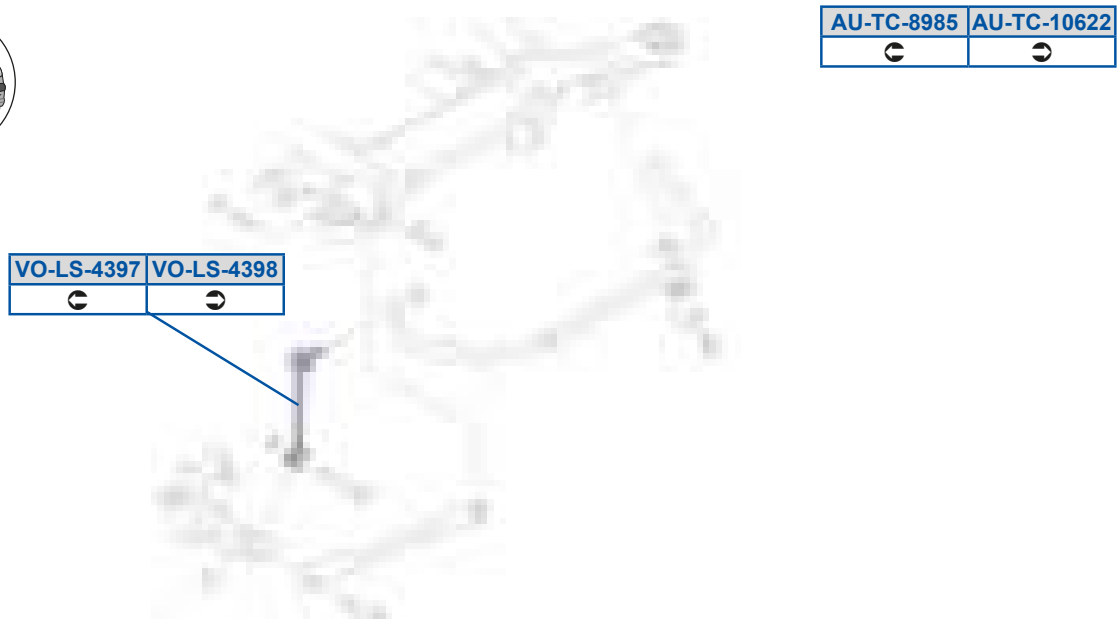
AU-TC-8985
AU-TC-10622
VO-LS-4397
VO-LS-4398

Of 5eQ598D>>
EZ7C7CAGF

Of 5eQ5FGFC
EZ7C7CAGE

Y9C8>AE
GCCABE8G887

g_ 5Oi 5A8CB
EZ7B99F98

g_ 5Sd5A8CF
GCCABE8A8973GCCABE8A898

g_ 5Sd5A8CG
GCCABE8A9973GCCABE8A998

g_ 5Zd5A8CA
GCCABA7DG77

g_ 5Zd5BAGE
GCCAAA7DG873GCCAAA7DG88

g_ 5Zd5BAGF
GCCAAA7E7873GCCAAA7E788

g_ 5cY5BFCF
EZ7B7E7EE

g_ 5dP598GCE

g_ 5dP5A8EA
EZ7B89AAA03GCCABA9BA78

g_ 5dP5CD>A
EZ7B7E8FA03GCCAB8CFF87

g_ 5dP5CD>B
GCCAB89B97A3GCCAB89B97B

g_ 5eQ59ABDC
GCFAB87C877

g_ 5h a5A8D8
GCCAB878EA73GCCAB878EA9

g_ 5h a5A8D9
GCCAB878FA73GCCAB878FA9

g_ 5h a5A8E9
GCCAB879E773GCCAB879E78

aScd_] O A88 OQGr [1	8A7GD 8E78B	aScd_] O B88 OQGr d1	897GB 8; 78F
aScd_] O B88 Vt vÉut v OQGr Q4QGr d1	897GB 8; 78F	dOec WO OQGr [1	8B7GD 8C78D
h WO	89788	h WO Vt vÉut v	8F788

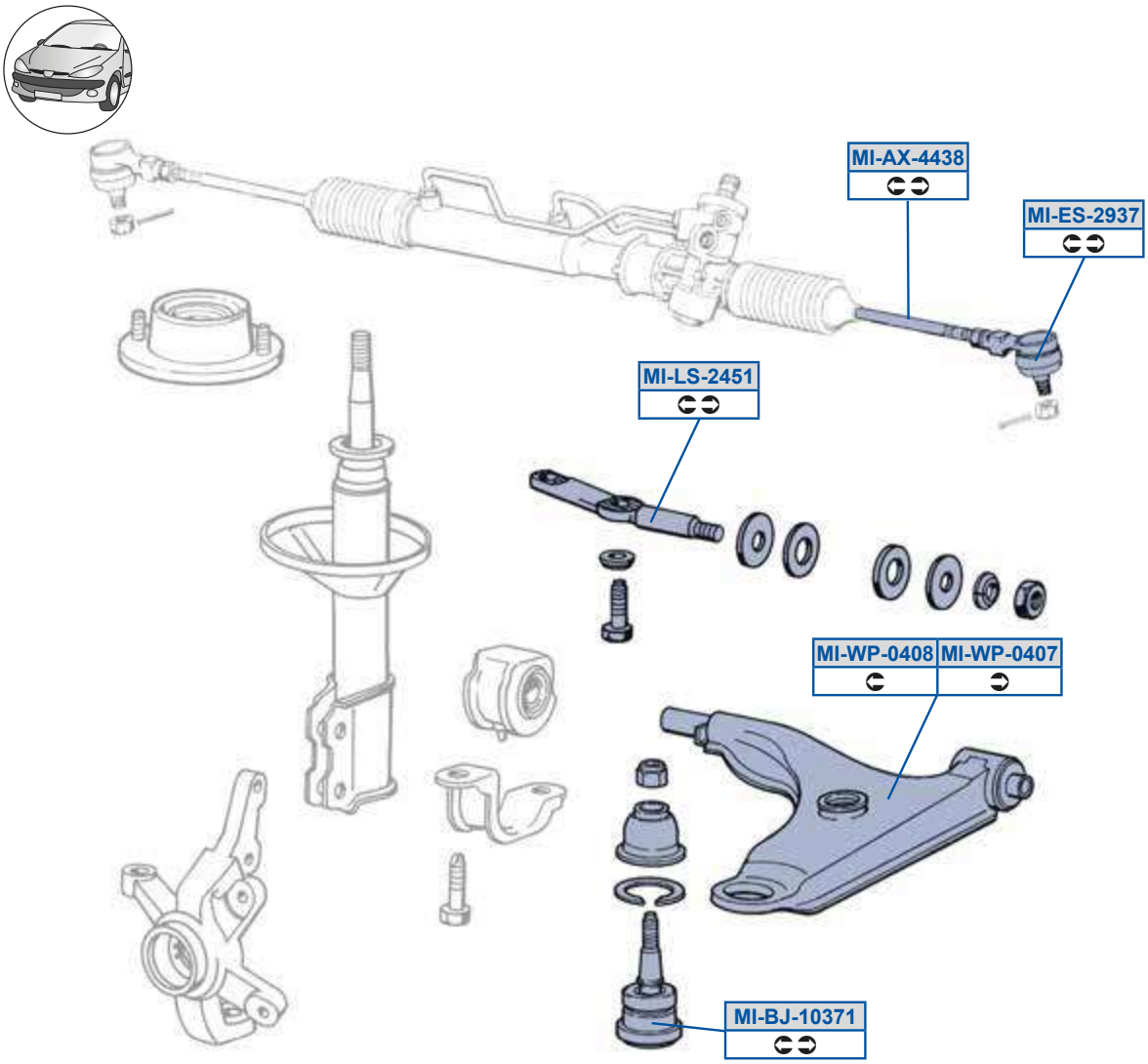

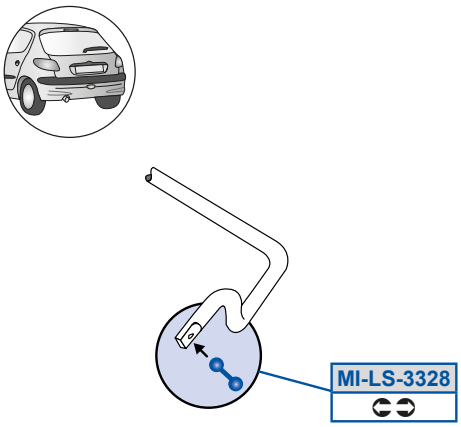

MOOG

[V5OI 5BBAF
i CA77A83i CA77A9

[V5PX598AE9
CBC7A990773CBC7A9C077

[V5Sd5>GAE
a PC9E8DG3a PCGED7C

[V5Zd5>BC9
a P8FCBEE3a P9B8GEB

[V5Zd5AA>F
i C98797

[V5h a58B8E
a PG7E88D3a PG897EF

[V5h a58B8F
a PG7E88C3a PG897EE

c S] Of Ze

9G WP 7QCAr 1	897FF 8G7GB	9G WP 0dCAr 1	897FF 9; 7G;
9G WQt u é x 0RCAr 1	8E7G9 8B7G;	9G WQÉt t wx 0ZCAr 1	897FF 9; 7G;
9G WP 7QCAr 1	897G9 8D789	9G WP 0dCAr 1	8A7G; 9; 7GC
9G WQt u é x 0RCAr 4FCAr 1	8B7G; 8D789	9G WQÉt t wx 0ZCAr 1	8B7G; 8F78A

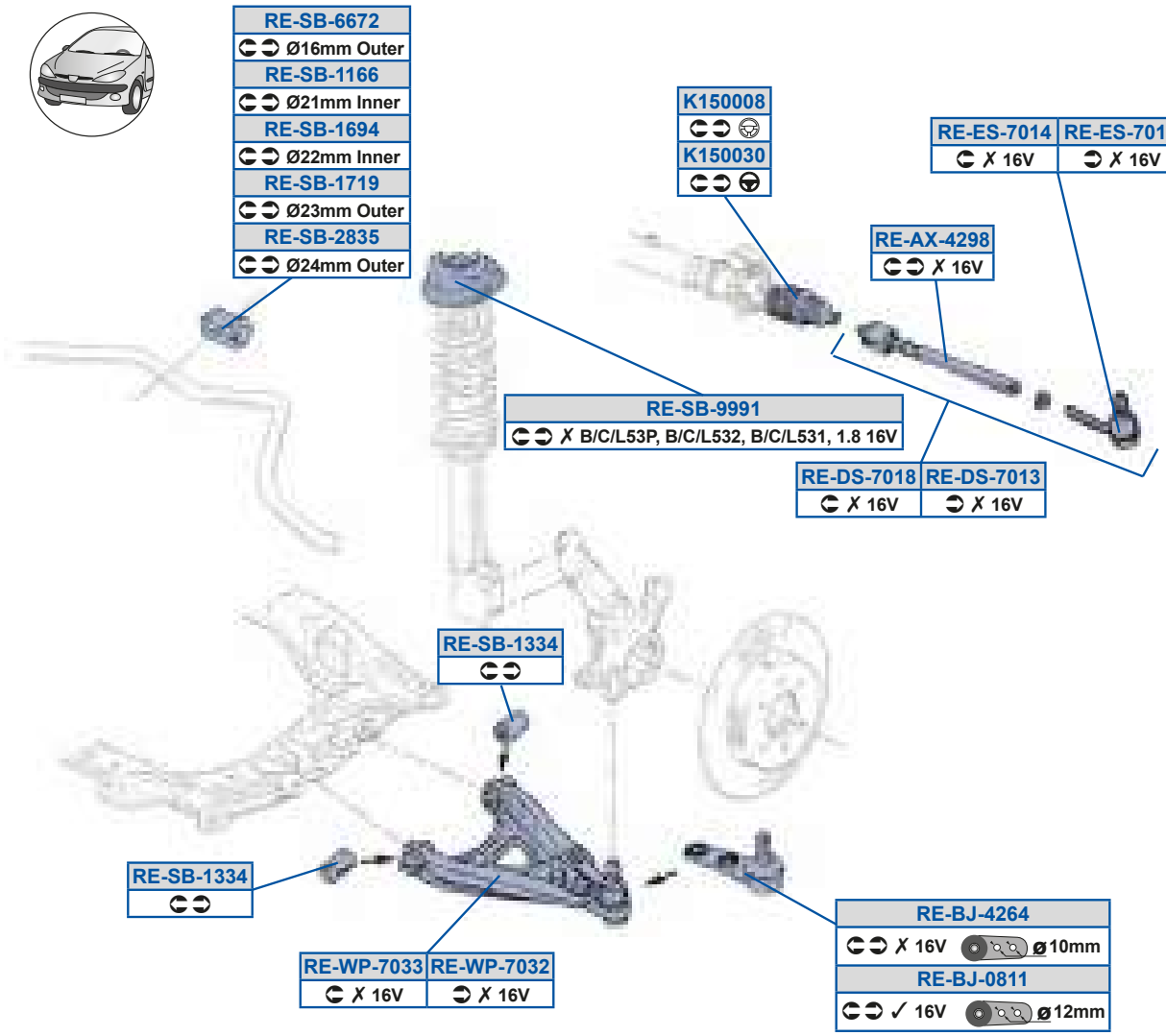

MOOG

Y9C888F
EE77DEFDBG3EE77EF87GE

Y9C88A8
BB78B7A3EE77E7D77E

c S5Oi 5B>GF
EE798BCAAE

c S5PX5B>DB
EE77EFABBE3EE78BD98F9

c S5Rd5E89A
EE78BDE9AE

c S5Rd5E89F
EE78BDE9AC

c S5Sd5E89B
D7777A77BE

c S5Sd5E89C
D7777A77BF

c S5dP599DD
EE77BAD78B3EE77EFCEFF

c S5dP59AAB
EE77EFGBEF3EE77FB7EB8

c S5dP59DGB
D77877EF993EE77EGF7CA

c S5dP59E9G
EE77EFB8E7

c S5dP5>FAC
EE77EFB8E8

c S5dP5DDE>
EE77EFGB89

c S5dP5GGG9
EE77FAC9CB3EE77FAC9CBo8

c S5h a5E8A>
EE77BA7FA93EE77BADA7A

c S5h a5E8AA
EE77BA7FA83EE77BADA79

QOaef c	8D79A	QOaef c 0KCr 1	8D79A

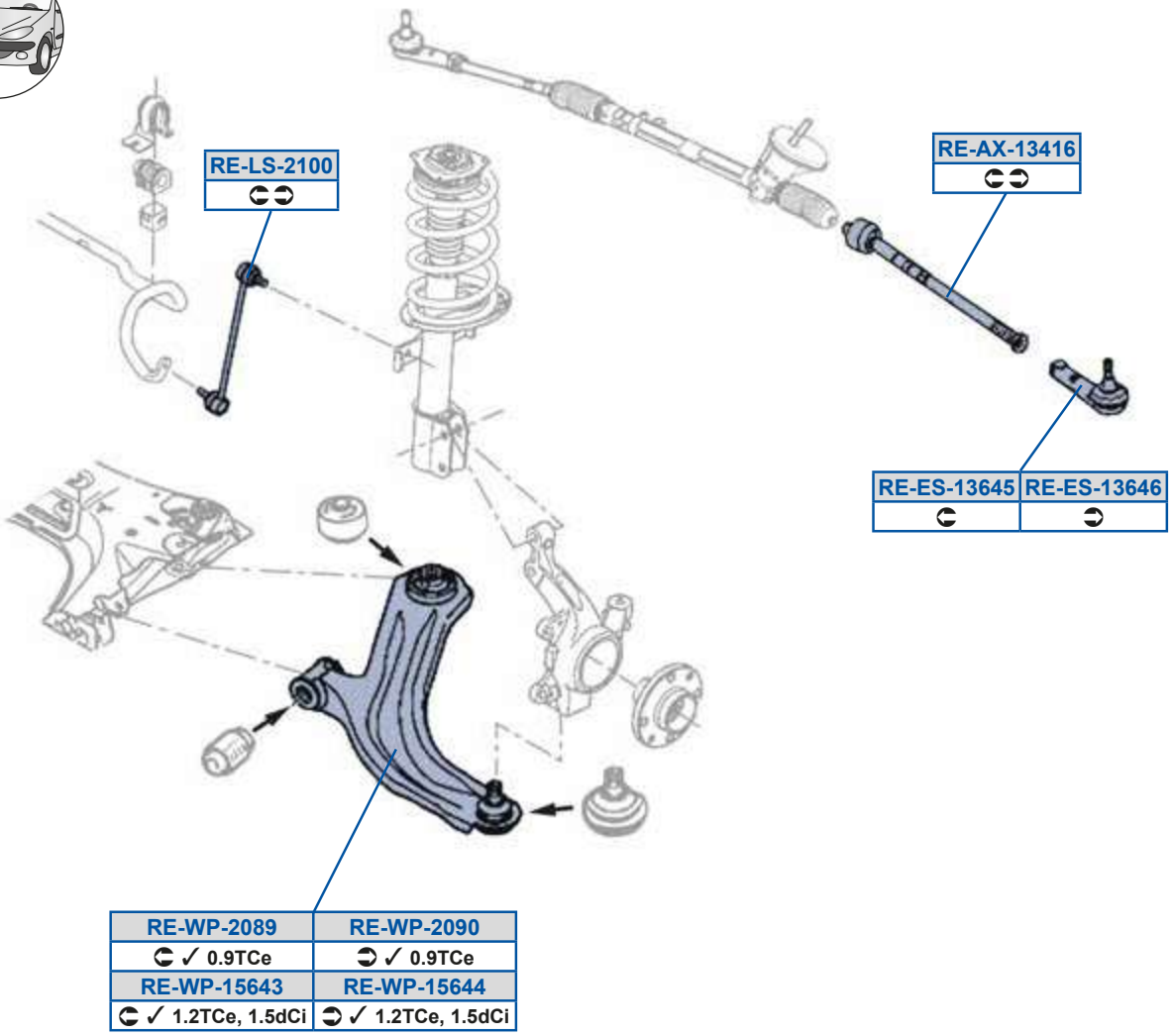

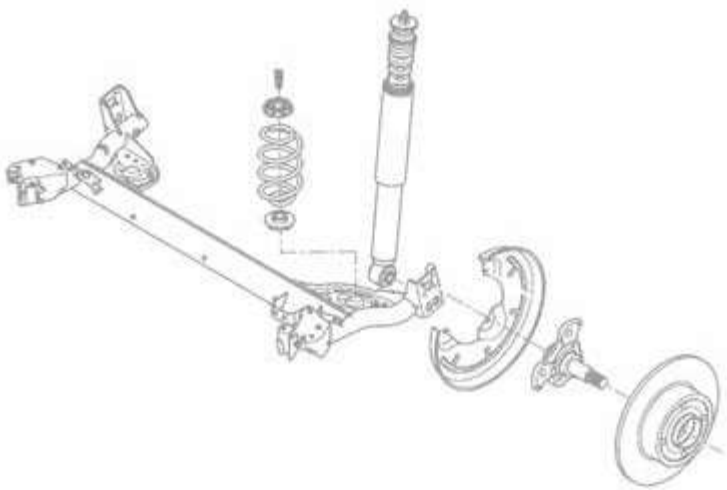

MOOG

c S5Oi 59AB9D
BFC9887E8n3BFC988AECn

c S5Sd59ADBC
BFC977ADFn

c S5Sd59ADBD
BFC97FACCn

c S5Zd5>988
CC887EG8Dn3F97789EA7F

c S5h a59CDBA
CBC7C9EAEn3CBC7CC97Fn

c S5h a59CDBB
CBC7B8A9En3CBC7BCBEDn

c S5h a5>8FG
CBC7CA8E7n3CBC7CGAACn

c S5h a5>8G8
CBC77A7AEn3CBC7B78A8n

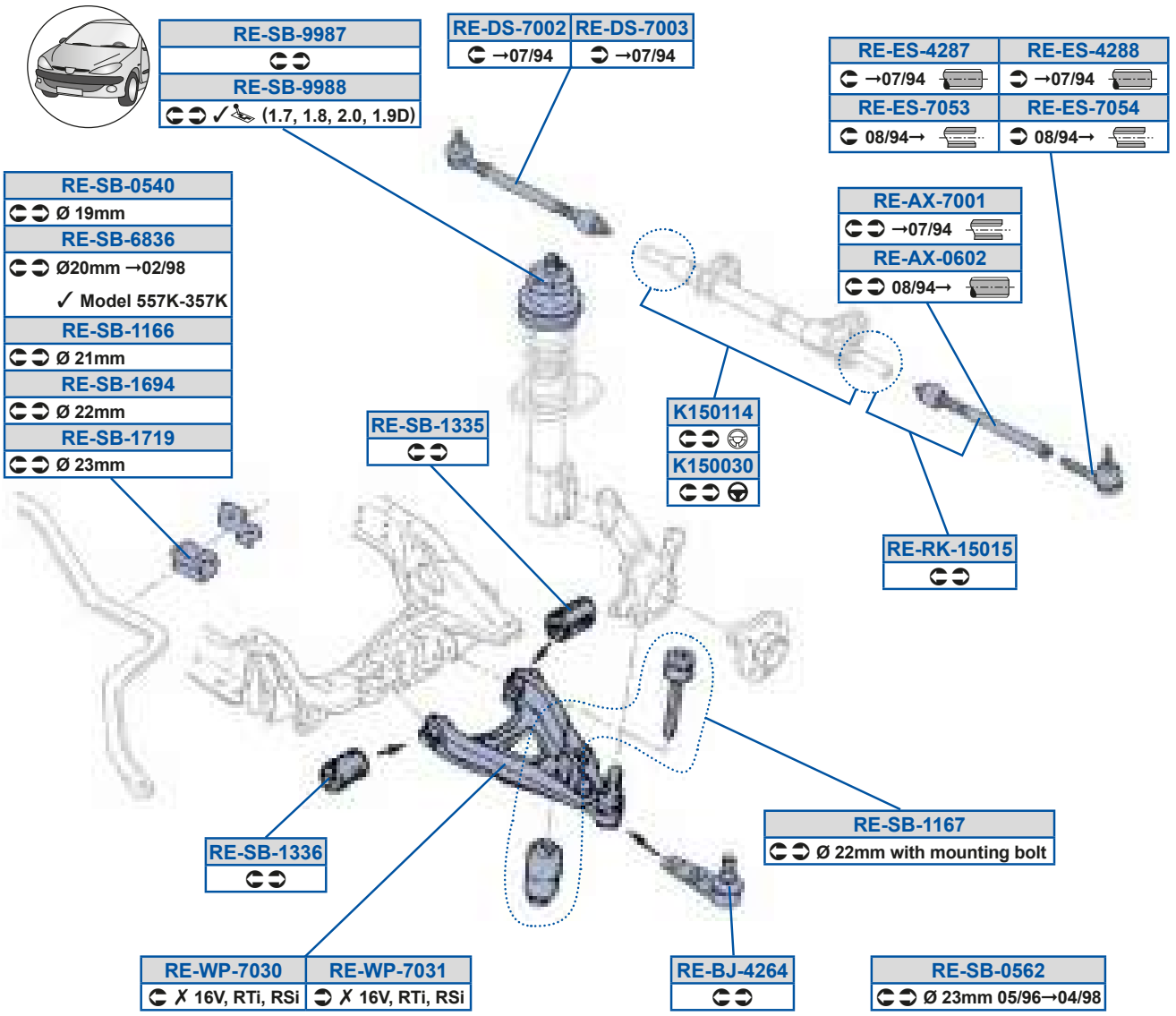
RE-SB-9987
RE-SB-9988
✓ (1.7, 1.8, 2.0, 1.9D)
RE-DS-7002
→07/94
RE-DS-7003
→07/94
RE-ES-4287
→07/94
RE-ES-4288
→07/94
RE-ES-7053
08/94→
RE-ES-7054
08/94→
RE-SB-0540
Ø 19mm
RE-SB-6836
Ø20mm →02/98
✓ Model 557K-357K
RE-SB-1166
Ø 21mm
RE-SB-1694
Ø 22mm
RE-SB-1719
Ø 23mm
RE-AX-7001
→07/94
RE-AX-0602
08/94→
RE-SB-1335
K150114
K150030
RE-RK-15015
RE-SB-1167
Ø 22mm with mounting bolt
RE-SB-1336
RE-WP-7030
✗ 16V, RTi, RSi
RE-WP-7031
✗ 16V, RTi, RSi
RE-BJ-4264
RE-SB-0562
Ø 23mm 05/96→04/98

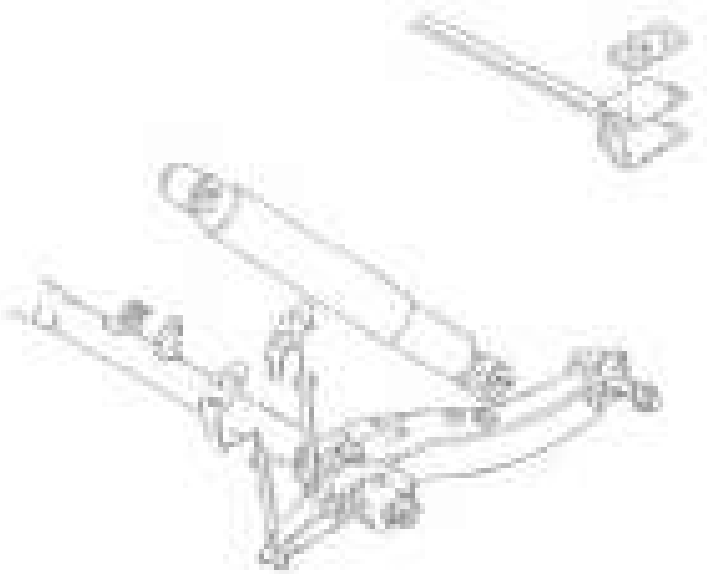

Y9C88A8
BB78B7A3EE77E7D77E

Y9C899B
EE78BDGBGE

c S5Oi 58D8>
D777799F7E3EE78BDE9E8 /40

c S5PX5B>DB
EE77EFABBE3EE78BD98F9

c S5Sd5E8CA
D777799E973D777799EC9

c S5Sd5E8CB
D777799E983D777799ECA

c S5c Y59C89C
D777799F7E3EE78BDE9E8 /40

c S5dP58CB8
EE77ED79DB

c S5dP599DD
EE77BAD78B3EE77EFCEFF

c S5dP599DE
EE77EGGB7B

c S5dP59AAC
EE77EGG7DB

c S5dP59AAD
EE77EGG7DC

c S5dP59DGB
D77877EF993EE77EGF7CA

c S5dP59E9G
EE77EFB8E7

c S5dP5GGFF
EE77F9EBAD3EE77F9EBADo9

cS] Of Ze

QZW WOPPr 4QPr 1	8G7GF	QZW WP 0dP8797; r 1	8G7GF
eVOZW WOZPr 1	8; 7GF		

Qéz Wbeyrét

K150008
⊂⊃ ⊙ ✗ 2.0 16V
K150134
⊂⊃ ⊕ SMI ✗ 2.0 16V Sport
K150138
⊂⊃ ⊕ TRW →12/99, ✗ 2.0 16V Sport
K150157
⊂⊃ ⊕ TRW 01/00→, ✗ 2.0 16V Sport
K150030
⊂⊃ ✓ 2.0 16V Sport

RE-RK-15026	RE-RK-15025
⊂ 01/00→ SMI ⊙	⊃ 01/00→ SMI ⊙
RE-RK-15033	**RE-RK-15048**
⊂ 01/00→ TRW ⊕	⊃ 01/00→ TRW ⊕
RE-RK-15024	
⊂⊃ 01/00→ SMI ⊕	

RE-SB-1166
⊂⊃ Ø 21mm
RE-SB-1694
⊂⊃ Ø 22mm
RE-SB-2834
⊂⊃ Ø 23mm
RE-SB-2835
⊂⊃ Ø 24mm

RE-SB-9992
⊂⊃

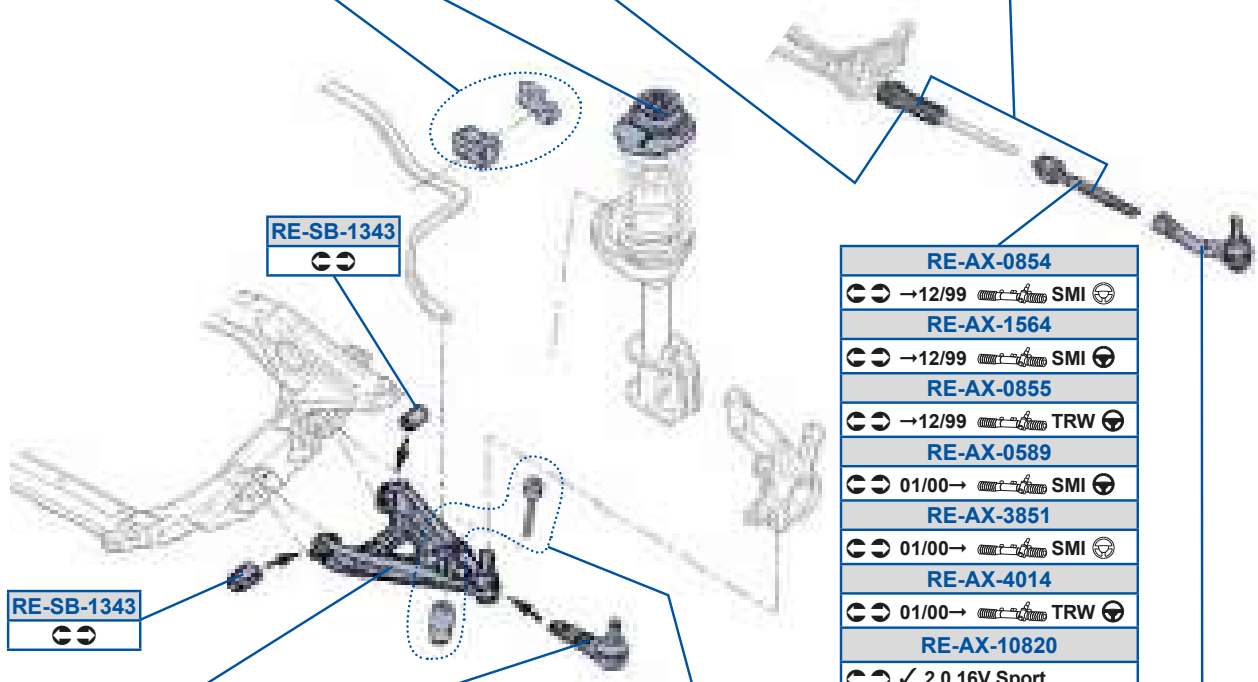

RE-SB-1343
⊂⊃

RE-AX-0854
⊂⊃ →12/99 SMI ⊙
RE-AX-1564
⊂⊃ →12/99 SMI ⊕
RE-AX-0855
⊂⊃ →12/99 TRW ⊕
RE-AX-0589
⊂⊃ 01/00→ SMI ⊕
RE-AX-3851
⊂⊃ 01/00→ SMI ⊙
RE-AX-4014
⊂⊃ 01/00→ TRW ⊕
RE-AX-10820
⊂⊃ ✓ 2.0 16V Sport

RE-SB-1343
⊂⊃

RE-WP-0339	RE-WP-0338
⊂ ✗ Sport	⊃ ✗ Sport
RE-WP-14757	**RE-WP-14758**
⊂ 09/08→	⊃ 09/08→

RE-BJ-4264
⊂⊃ ø10mm
RE-BJ-0811
⊂⊃ ø12mm

RE-SB-1167
⊂⊃ Ø 22mm with mounting bolt

RE-ES-1563	RE-ES-1562
⊂ →12/99	⊃ →12/99
RE-ES-0672	**RE-ES-0673**
⊂ 01/00→	⊃ 01/00→

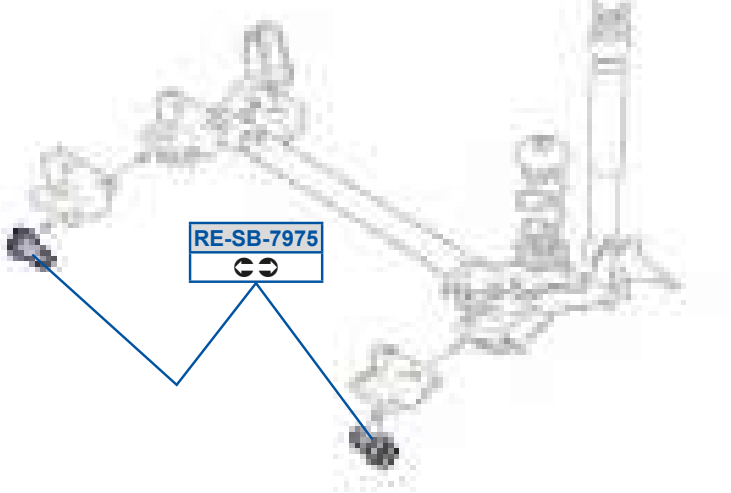

RE-SB-7975
⊂⊃

cS] Of Ze

MOOG

Y9C888F
EE77DEFDBG3EE77EF87GE

c S5Oi 598F>8
EE78BEADCD

c S5Sd59CD>
EE788BE89E3EE78BE889E

c S5dP599DE
EE77EGGB7B

Y9C88A8
BB78B7A3EE77E7D77E

c S5Oi 59CDB
EE78BE889C3EE78BE988C

c S5Sd59CDA
EE788BE89D3EE78BE889D

c S5dP59ABA
EE77B8G9AD3EE77B8G9BG

Y9C89AB
D77779CCBD3D77779CDE8

c S5Oi 5AFC9
EE78BE988A

c S5c Y59C8>B
EE78BE98973EE78BEADCC

c S5dP59DGB
D77877EF993EE77EGF7CA

Y9C89AF
D77779CBGE3EE78BDGBFD

c S5Oi 5B89B
EE78BE9EAB3EE78BE9EAC

c S5c Y59C8>C
EE78BE988A

c S5dP5>FAB
EE77FACG9G

Y9C89CE
EE78BDGBFD3EE78BE88B8

c S5PX58F99
EE78BD98F93EE78BDFB88

c S5c Y59C8>D
EE78BE988A

c S5dP5>FAC
EE77EFB8E8

c S5Oi 58CFG
EE78BE98973EE78BEADCC

c S5PX5B>DB
EE77EFABBE3EE78BD98F9

c S5c Y59C8AA
EE78BE9EAB3EE78BE9EAC

c S5dP5EGEC
EE77FAGA8D3F9777B9CGB

c S5Oi 58FCB
EE78BE889B

c S5Sd58DE>
EE787BEB8C3EE787BEF89

c S5c Y59C>BF
EE78BE9EAB3EE78BE9EAC

c S5dP5GGG>
EE77F9GC9G3EE77F9GC9Go8

c S5Oi 58FCC
EE78BE88BA3EE78BE88BB

c S5Sd58DEA
EE787BEB8D3EE787BEF8A

c S5dP599DD
EE77BAD78B3EE77EFCEFF

c S5h a58AAF
EE77A87F873EE77A8AGBC

cS] Of Ze

QZW WWPPr 4QPr 1	8G7GF	QZW WWP 0dP8797; r 1	8G7GF
eVOZW WOZPr 1	8; 7GF		

K150008
⊂⊃ ⊙ ✗ 2.0 16V
K150134
⊂⊃ ⊕ SMI ✗ 2.0 16V Sport
K150138
⊂⊃ ⊕ TRW →12/99, ✗ 2.0 16V Sport
K150157
⊂⊃ ⊕ TRW 01/00→, ✗ 2.0 16V Sport
K150030
⊂⊃ ✓ 2.0 16V Sport

RE-RK-15026	RE-RK-15025
⊂ 01/00→ SMI ⊙	⊃ 01/00→ SMI ⊙
RE-RK-15033	**RE-RK-15048**
⊂ 01/00→ TRW ⊕	⊃ 01/00→ TRW ⊕
RE-RK-15024	
⊂⊃ 01/00→ SMI ⊕	

RE-SB-1166
⊂⊃ Ø 21mm
RE-SB-1694
⊂⊃ Ø 22mm
RE-SB-2834
⊂⊃ Ø 23mm
RE-SB-2835
⊂⊃ Ø 24mm

RE-SB-9992
⊂⊃

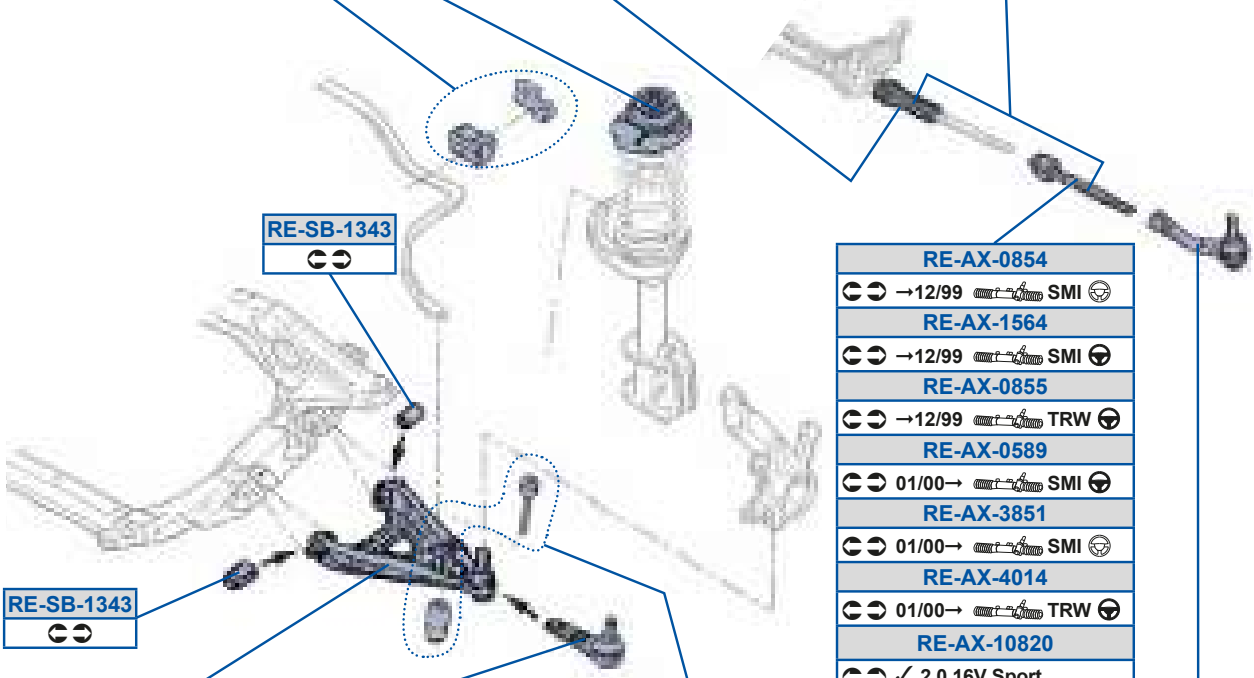

RE-SB-1343
⊂⊃

RE-AX-0854
⊂⊃ →12/99 SMI ⊙
RE-AX-1564
⊂⊃ →12/99 SMI ⊕
RE-AX-0855
⊂⊃ →12/99 TRW ⊕
RE-AX-0589
⊂⊃ 01/00→ SMI ⊕
RE-AX-3851
⊂⊃ 01/00→ SMI ⊙
RE-AX-4014
⊂⊃ 01/00→ TRW ⊕
RE-AX-10820
⊂⊃ ✓ 2.0 16V Sport

RE-SB-1343
⊂⊃

RE-WP-0339	RE-WP-0338
⊂ ✗ Sport	⊃ ✗ Sport
RE-WP-14757	**RE-WP-14758**
⊂ 09/08→	⊃ 09/08→

RE-BJ-4264
⊂⊃ ø10mm
RE-BJ-0811
⊂⊃ ø12mm

RE-SB-1167
⊂⊃ Ø 22mm with mounting bolt

RE-ES-1563	RE-ES-1562
⊂ →12/99	⊃ →12/99
RE-ES-0672	**RE-ES-0673**
⊂ 01/00→	⊃ 01/00→

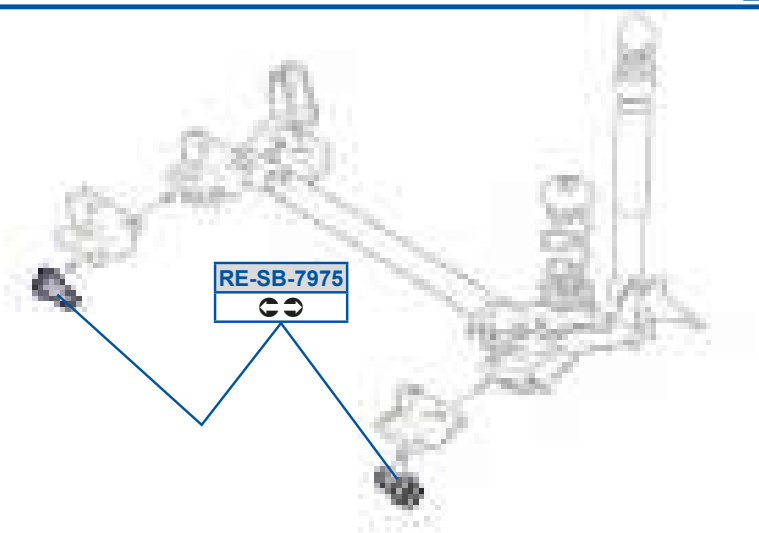

RE-SB-7975
⊂⊃

cS] Of Ze

cS5h a58AAG

EE77A87F7G3EE77A8AGBB

cS5h a59BECE

F977GB9B7E

cS5h a59BECF

F977GB9B7F

cS] Of Ze

QZW U t w 0Yc879r1	8; 78F	QZW WWPc8794Qc8791	8C78C
QZW WWP 0dPr4dcr1	8D78C 9; 79B		

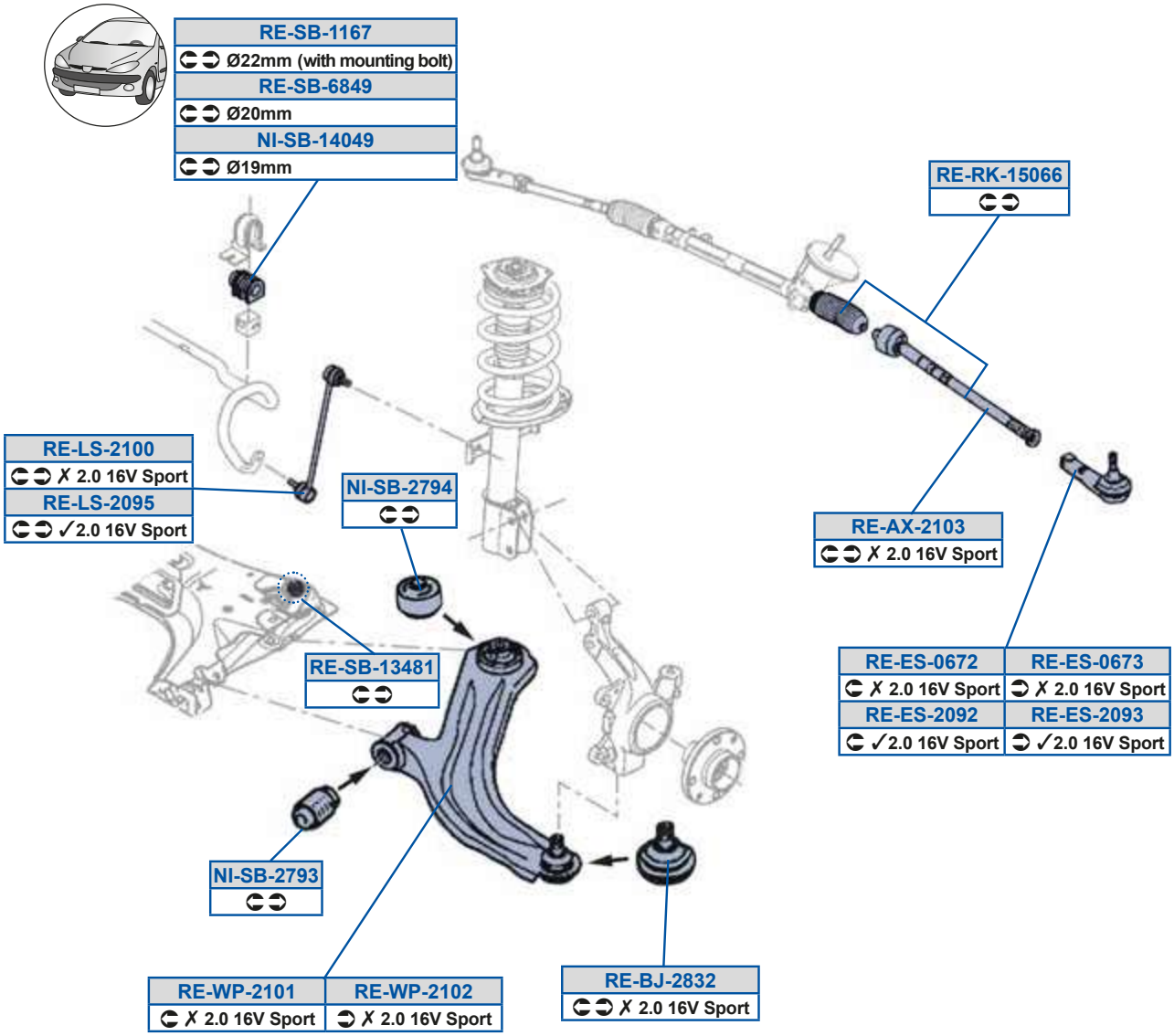

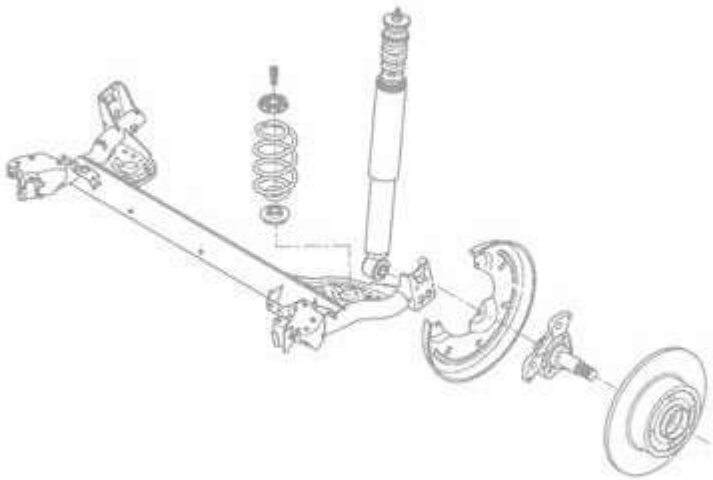

MOOG

] W8dP59B8BG
EE787D9CBG

c S5Sd5>8GA
EE787CBCFB3EE78BEBEGD

c S5dP59DGB
D77877EF993EE77EGF7CA

] W8dP5>EGA
CBCD70 D77

c S5Zd5>8GC
F977779FE73F977DD898E

c S5dP5>FAB
EE77FACG9G

] W8dP5>EGB
CBCD70 D77

c S5Zd5>988
CC887EG8Dn3F97789EA7F

c S5dP5>FAC
EE77EFB8E8

c S5Oi 5>98A
EE78BECFB8

c S5c Y59C8DD
EE78BECFB8

c S5dP5DFBG
EE787CDDEF

c S5PX5>FA>
B78D7BEGAn3F9779GFBCCo

c S5dP599DD
EE77BAD78B3EE77EFCEFF

c S5dP5EGEC
EE77FAGA8D3F9777B9CGB

c S5Sd58DE>
EE787BEB8C3EE787BEF89

c S5dP599DE
EE77EGGB7B

c S5h a5>989
F977ABDGB83F977D8C7CE

c S5Sd58DEA
EE787BEB8D3EE787BEF8A

c S5dP59ABA
EE77B8G9AD3EE77B8G9BG

c S5h a5>98>
F977ABDGB93F977D8C7CF

c S5Sd5>8G>
EE787CBCFA3EE787CBCFC

c S5dP59ABF9
F977EB9G7D

c S] Of Ze

QZW Wy	9979;	QZW Wy P	8979B
QZW U t w Wy	8979A		

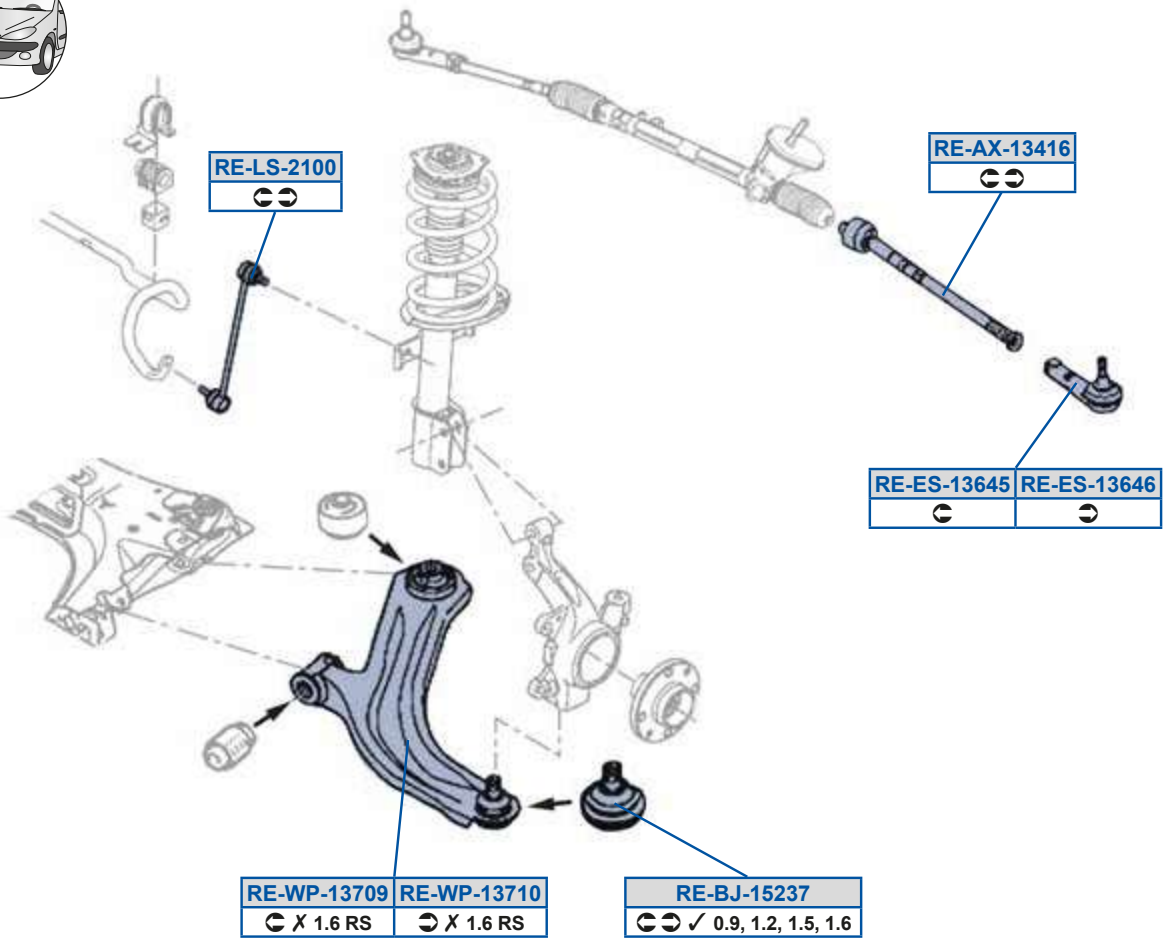

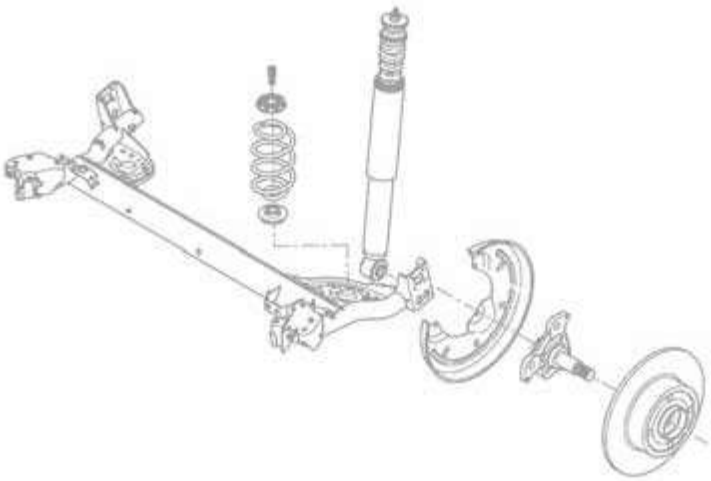

MOOG

c S5Oi 59AB9D
BFC9887E8n3BFC988AECn

c S5PX59C>AE
CBC7BFC7Dn /40

c S5Sd59ADBC
BFC977ADFn

c S5Sd59ADBD
BFC97FACCn

c S5Zd5>988
CC887EG8Dn3F97789EA7F

c S5h a59AE8G
CBC7C7C87n3CBC7CCE88n

c S5h a59AE98
CBC7BDF8En3CBC7BFC7Dn

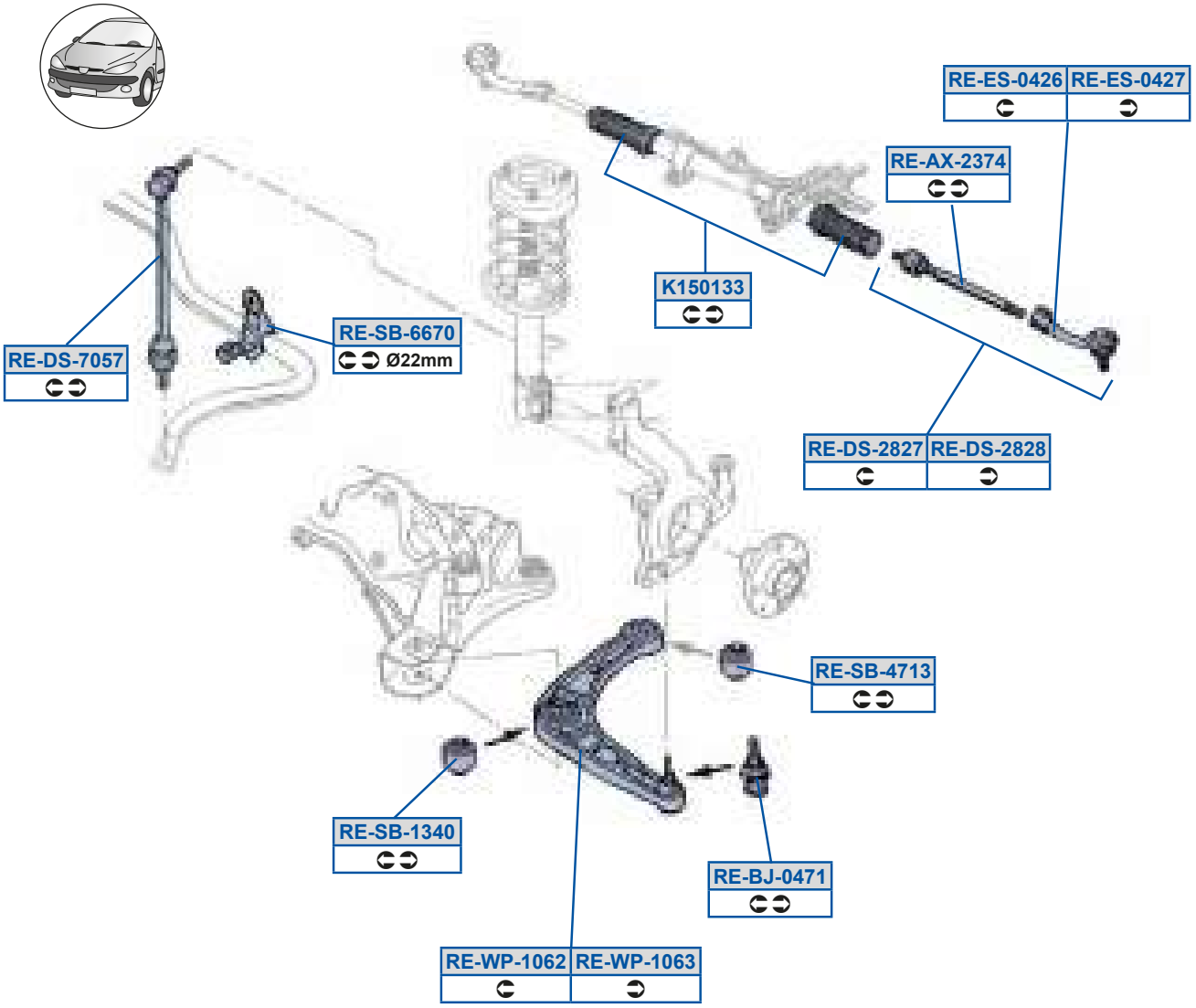
RE-ES-0426
RE-ES-0427
RE-AX-2374
K150133
RE-SB-6670
Ø22mm
RE-DS-7057
RE-DS-2827
RE-DS-2828
RE-SB-4713
RE-SB-1340
RE-BJ-0471
RE-WP-1062
RE-WP-1063

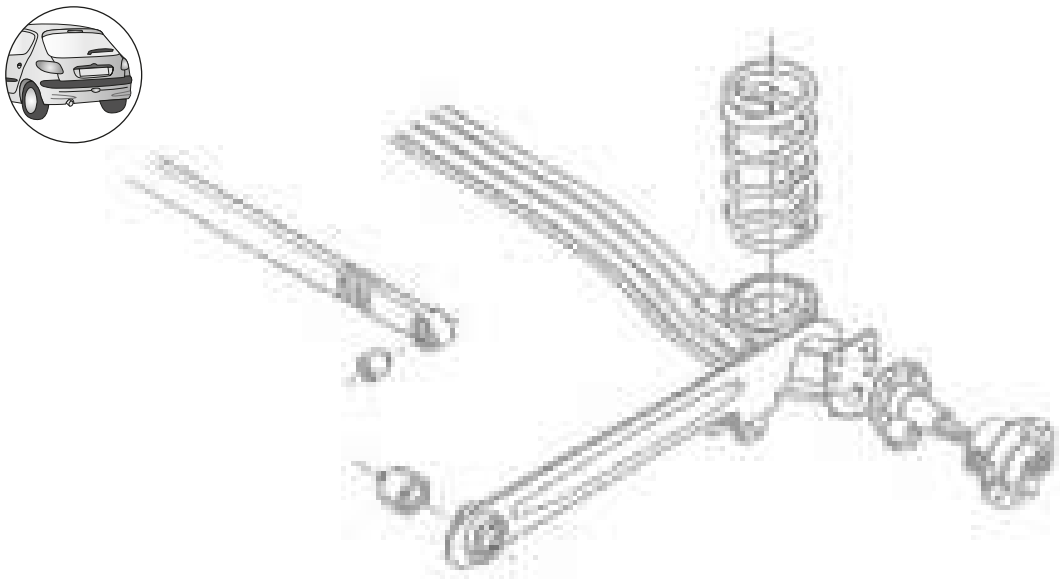

Y9C89AA
D79CAE79A8

cS5dP59AB8
D79CA7EEBD3EE77F99C7A

cS5Oi5>AEB
D79CAE7BGA/40

cS5dP5BE9A
D79CA7DBE83D79CA88C9G

cS5PX58BE9
D79CA7F8CC

cS5dP5DDE8
EE77EGEF98

cS5Rd5>F>E
D79CAE7BGA

cS5ha598D>
D79CA7CCE93D79CA7EDBG

cS5Rd5>F>F
D79CAE7BGB

cS5ha598DA
D79CA7CCEA3D79CA7EDC7

cS5Rd5E8CE
EE77F7CBGB

cS5Sd58B>D
D777799ED93D79CAE799G

cS5Sd58B>E
D777799ED83D79CAE79A7

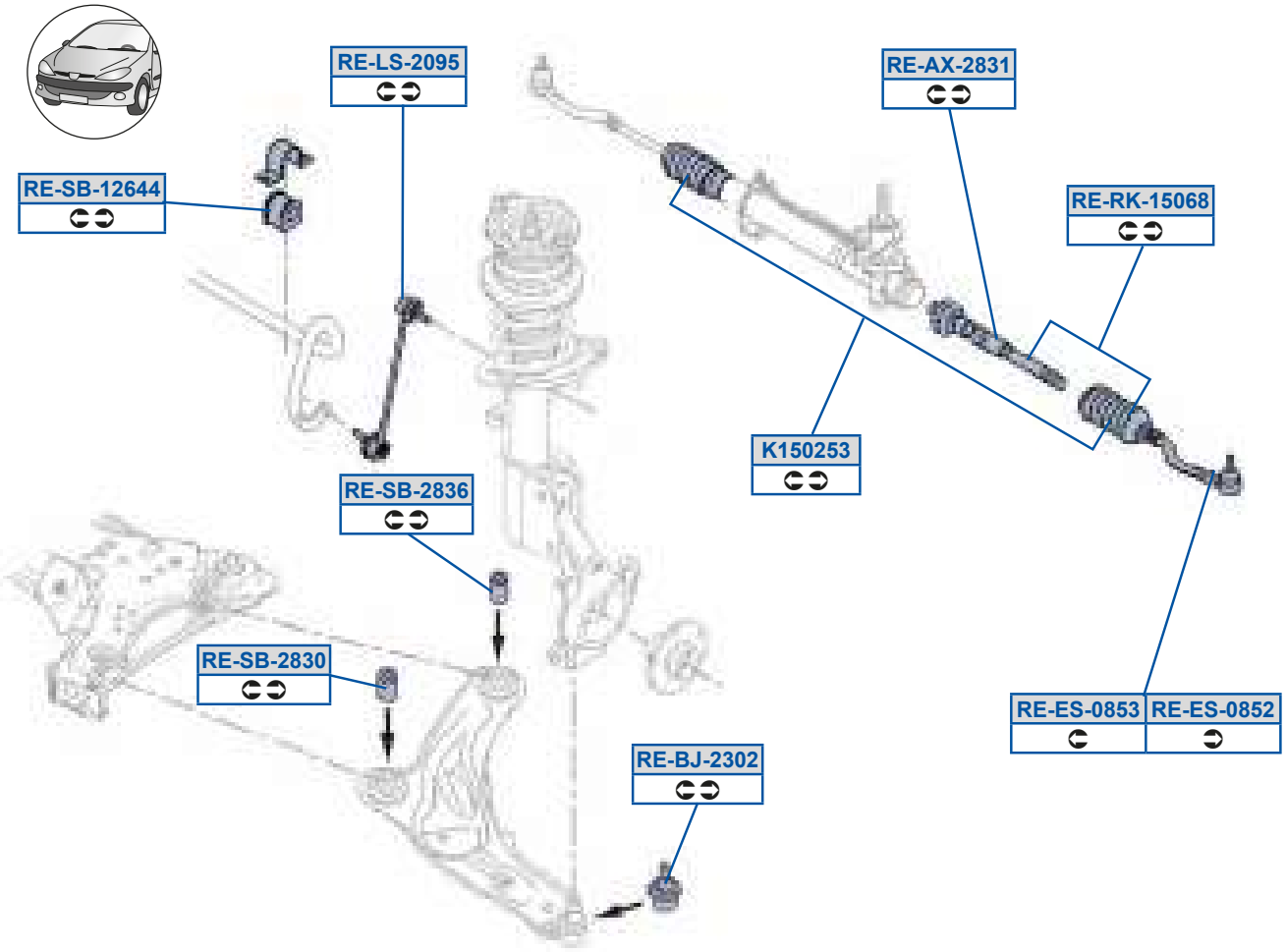
RE-LS-2095
RE-AX-2831
RE-SB-12644
RE-RK-15068
K150253
RE-SB-2836
RE-SB-2830
RE-ES-0853
RE-ES-0852
RE-BJ-2302

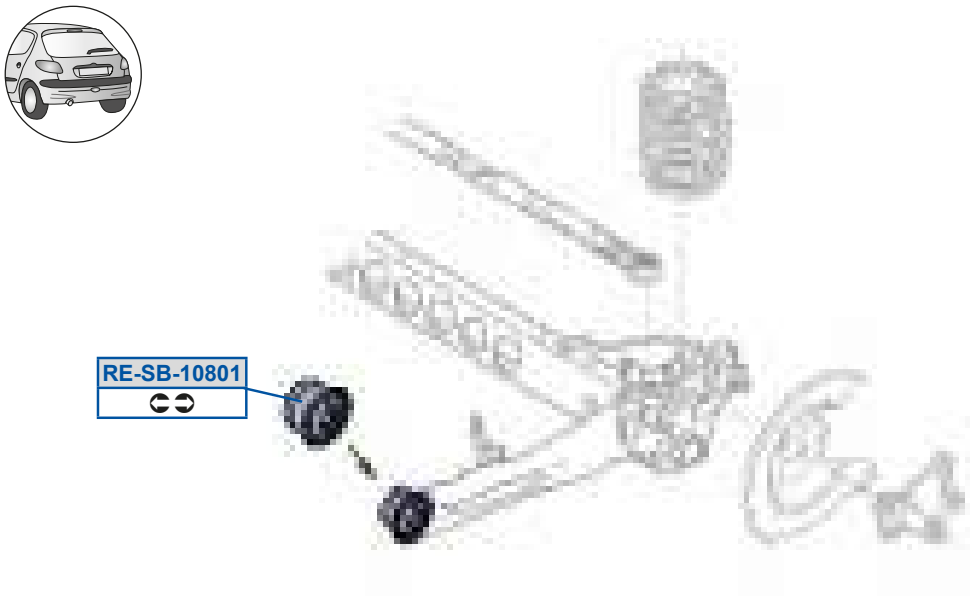
RE-SB-10801

Y9C8>CA
EE78BEB7EC

c S5dP59>DBB
F9779E9CG9

c S5Oi 5>FA9
EE78BEB7ED3EE78BEFCC9

c S5dP5>FA8
F977779FDF3F977AFG8AC /40

c S5PX5>A8>
B78D7DDEDn3D7B777987C

c S5dP5>FAD
F977AFG8AB /40

c S5Sd58FC>
BFC97GBBDn3EE787BG9FA

c S5Sd58FCA
BFC979E8Bn3EE787BG9F9

c S5Zd5>8GC
F977779FE73F977DD898E

c S5c Y59C8DF
EE78BEB7ED3EE78BEFCC9

c S5dP598F89
F977797B793F977E8C99G

cS] Of Ze

Si ac Sdd aév	8E7GC 987GG	c0aVR P 0TB8r 4UB8r 1	8E7FC 997GF

S v 5cr zu

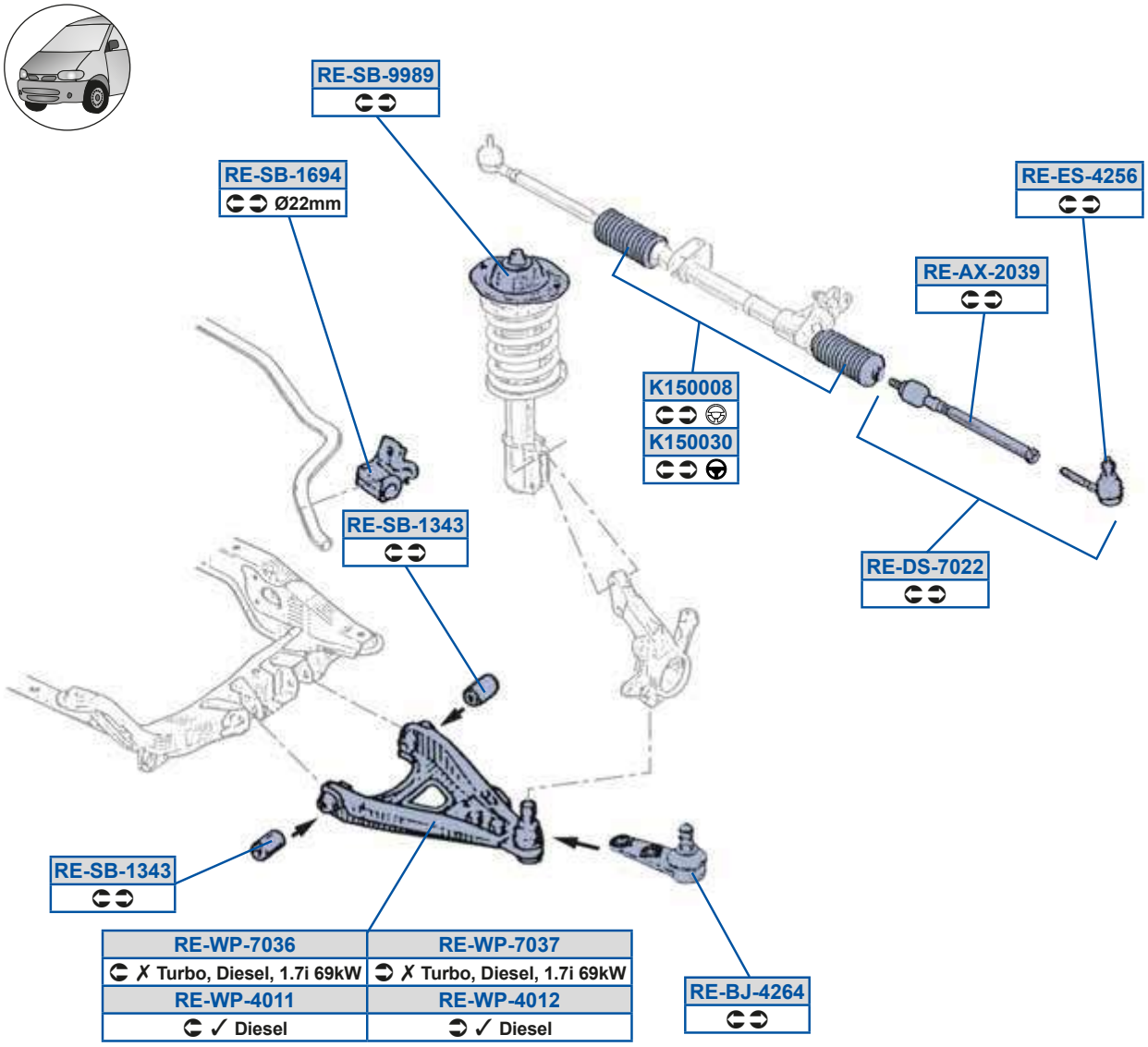

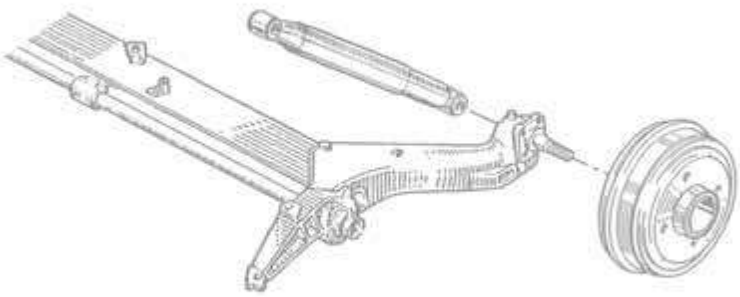

cS] Of Ze

MOOG

Y9C888F
EE77DEFDBG3EE77EF87GE

Y9C88A8
BB78B7A3EE77E7D77E

cS5Oi 5>8AG
EE77ABGAAG3EE77DFEBAA

cS5PX5B>DB
EE77EFABBE3EE78BD98F9

cS5Rd5E8>>
EE77ECGB8F3EE78BDAABD

cS5Sd5B>CD
EE78BD88B83EE78BDB8C8

cS5dP59AAA
EE7B777DF8

cS5dP59DGB
D77877EF993EE77EGF7CA

cS5dP5GGFG
EE77ECEA9B3EE77ECEA9Bo8

cS5eQ5B899
D778798BCB

cS5eQ5B89>
D778798BCC

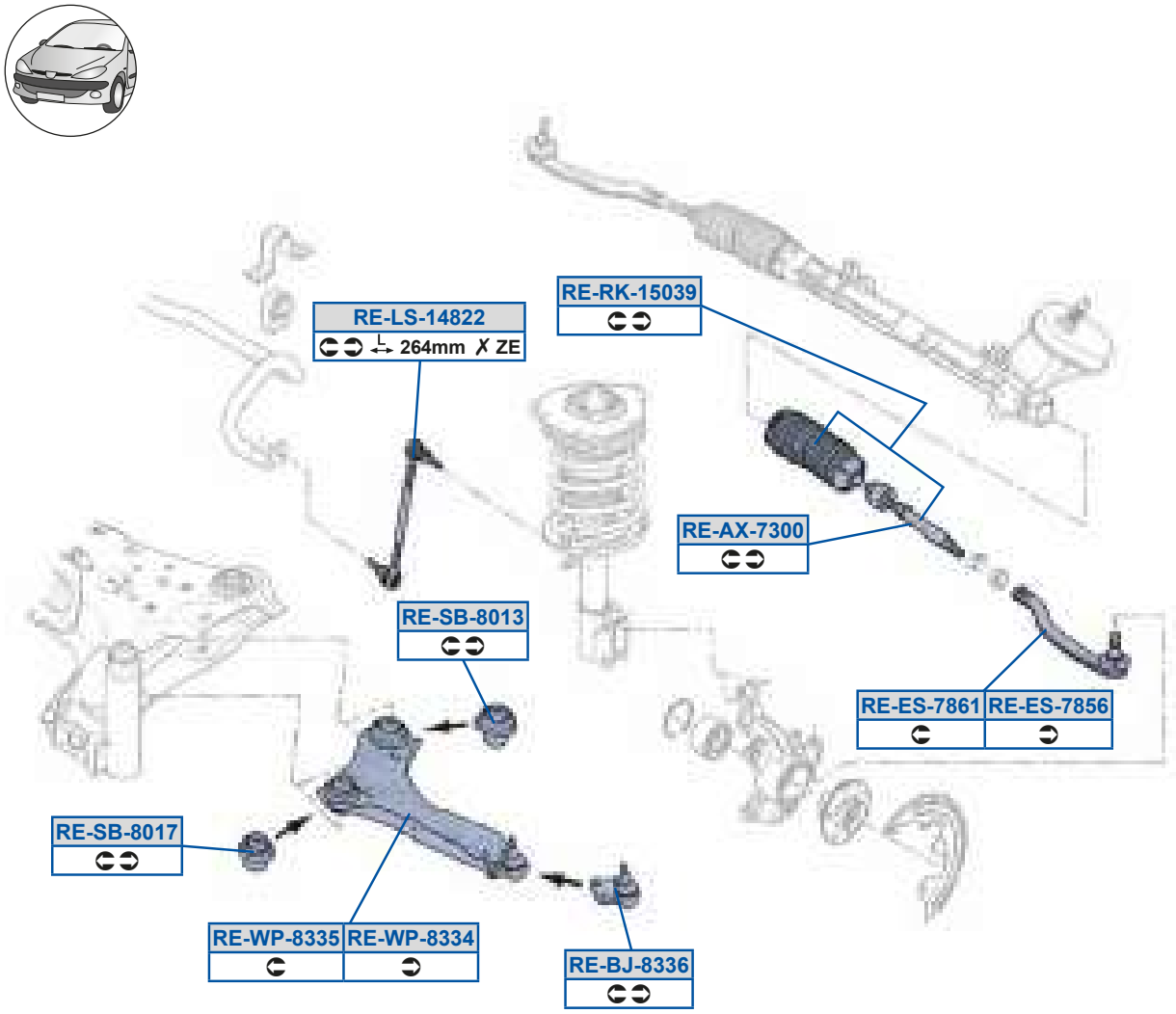
RE-LS-14822
264mm ✗ ZE
RE-RK-15039
RE-AX-7300
RE-SB-8013
RE-ES-7861
RE-ES-7856
RE-SB-8017
RE-WP-8335
RE-WP-8334
RE-BJ-8336

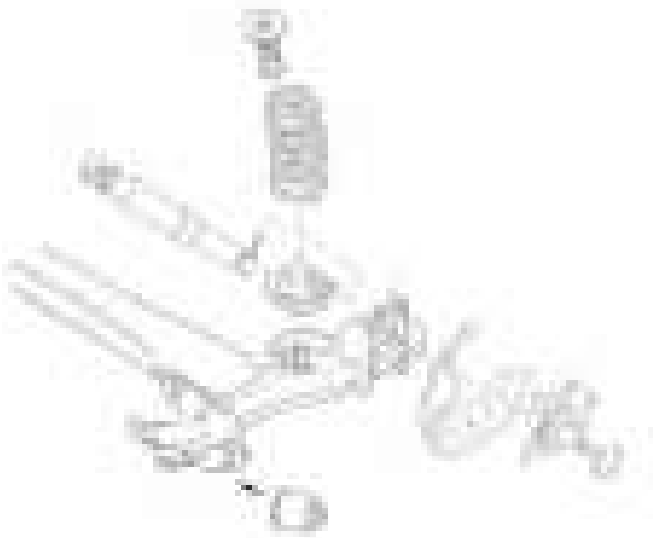

c S5Oi 5EA88
BFC98CD89n3BFC98CGD8n

c S5h a5FAAB
CBC77FDF9n3CBC77G97En

c S5PX5FAAD
B78D7G7D7n

c S5h a5FAAC
CBC78B7CCn3CBC78F8GBn

c S5Sd5EFCD
BFC97BDF7n

c S5Sd5EFD9
BFC979E87n

c S5Zd59BF>>
CBD8F777Gn

c S5c Y59C8AG
BFC98CD89n3BFC98CGD8n

c S5dP5F89A
CBC77G97En /40

c S5dP5F89E
CBC77G97En /40

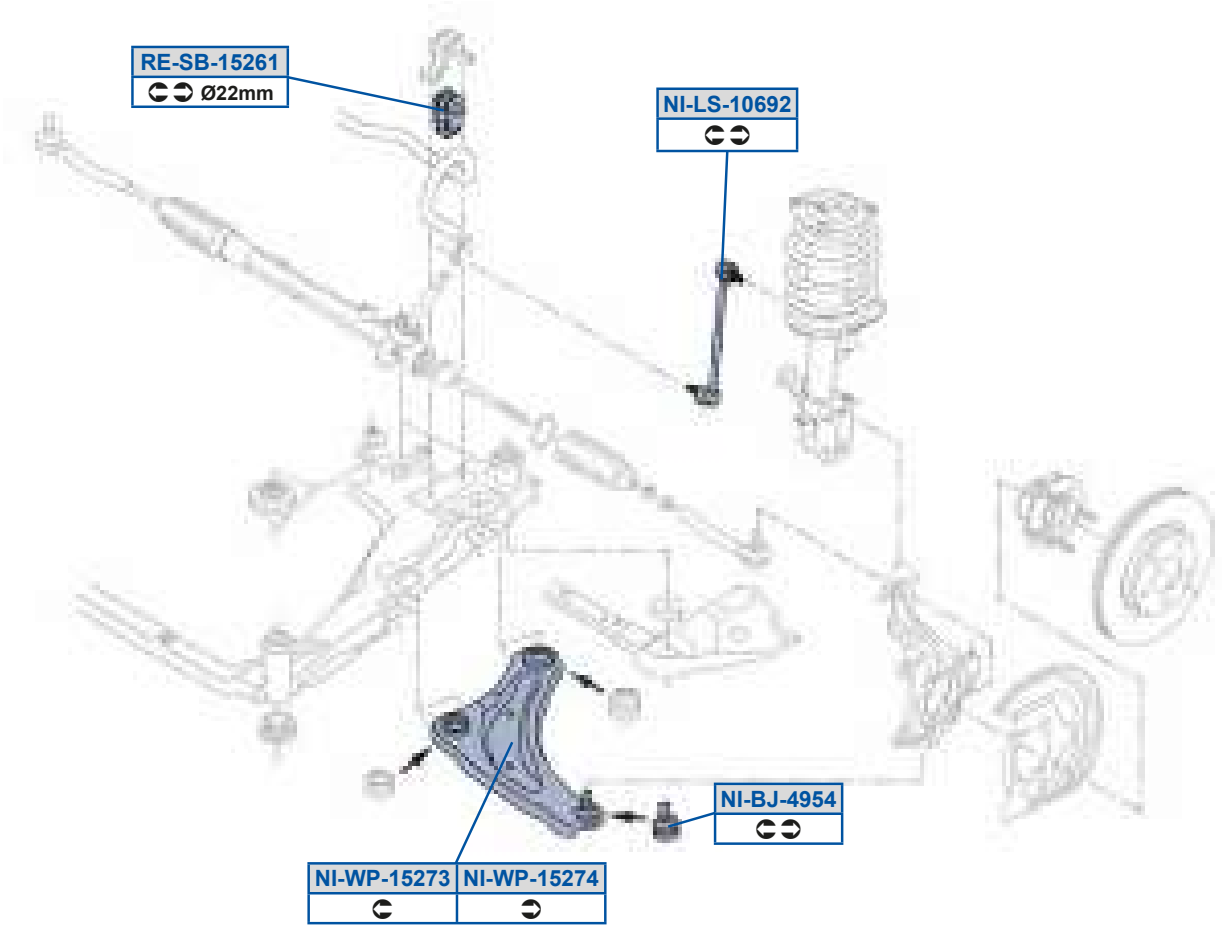
RE-SB-15261
Ø22mm
NI-LS-10692
NI-BJ-4954
NI-WP-15273
NI-WP-15274

4x2

4x4

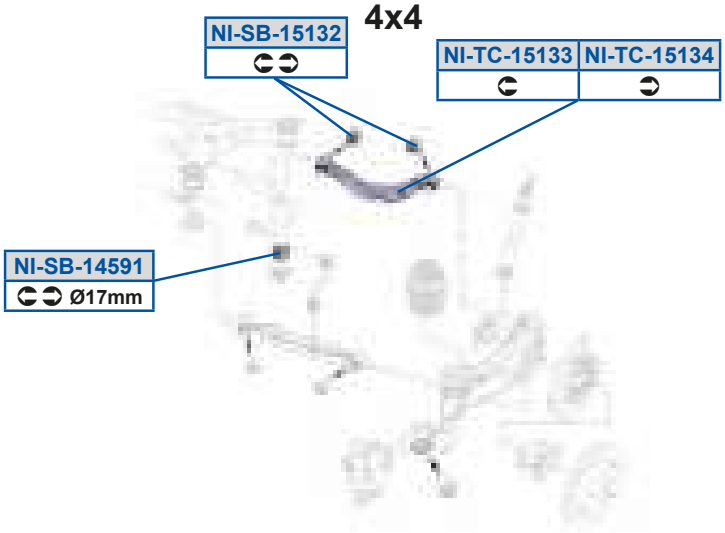
NI-SB-15132
NI-TC-15133
NI-TC-15134
NI-SB-14591
Ø17mm

] V5PX5BGCB
CBC77QQB7O /40

] V5Zd598DG>

] V5dP59BCG9
CBD8AXR8EO

] V5dP59C9A>
CC897XR77P /40

] V5eQ59C9AA
CC898XR77P

] V5eQ59C9AB
CC897XR77P

] V5h a59C>EA
CBC78BSO7P

] V5h a59C>EB
CBC77BSO7P

cS5dP59C>D9
CBD8ABSO7P

✗ 4x4

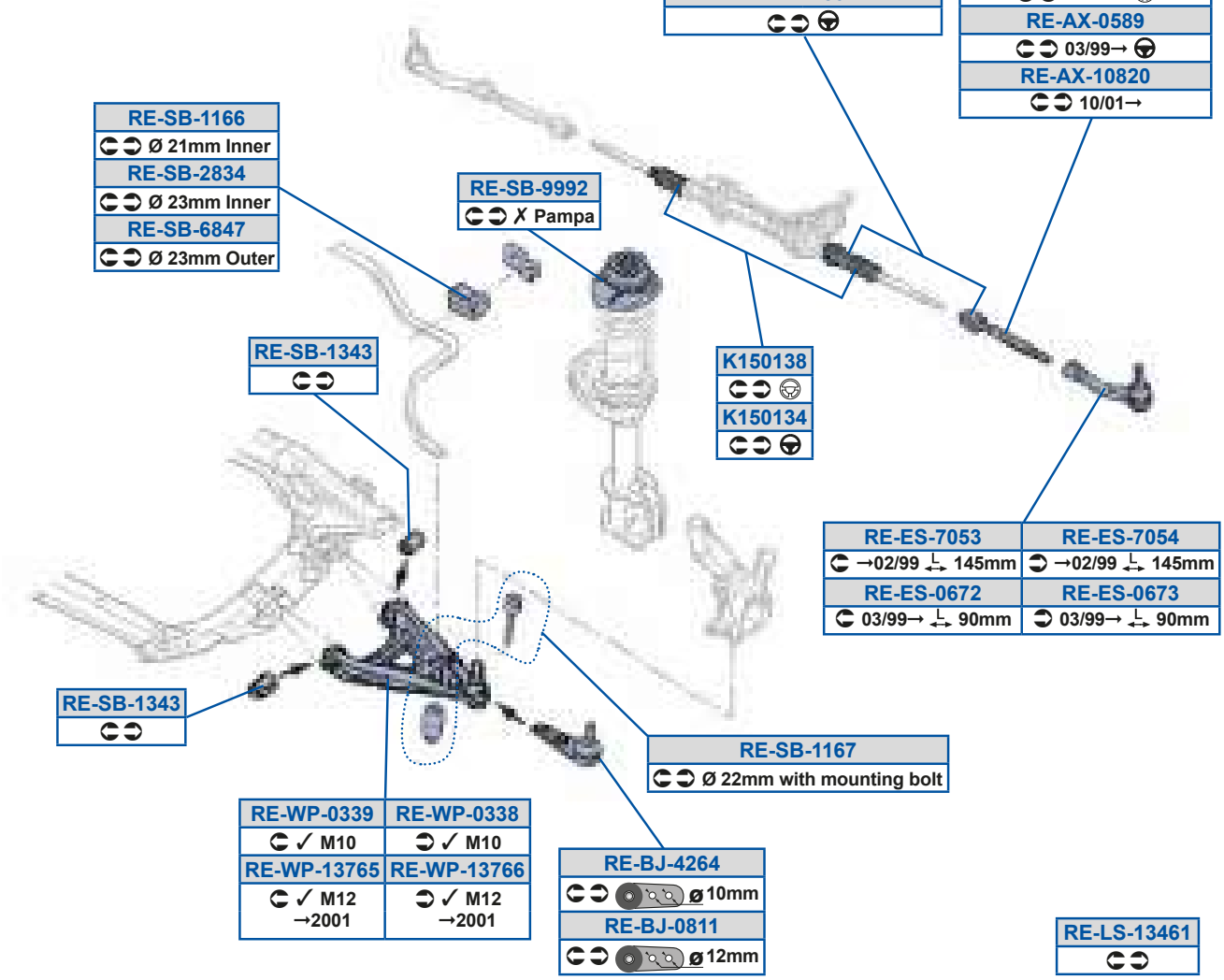
RE-AX-1616
→02/99 257mm
RE-AX-2087
→02/99 303mm
RE-AX-3851
03/99→
RE-AX-0589
03/99→
RE-AX-10820
10/01→
RE-RK-15026
03/99→
RE-RK-15025
03/99→
RE-RK-15024
RE-SB-1166
Ø 21mm Inner
RE-SB-2834
Ø 23mm Inner
RE-SB-6847
Ø 23mm Outer
RE-SB-9992
✗ Pampa
RE-SB-1343
K150138
K150134
RE-ES-7053
→02/99 145mm
RE-ES-7054
→02/99 145mm
RE-ES-0672
03/99→ 90mm
RE-ES-0673
03/99→ 90mm
RE-SB-1343
RE-SB-1167
Ø 22mm with mounting bolt
RE-WP-0339
✓ M10
RE-WP-0338
✓ M10
RE-WP-13765
✓ M12 →2001
RE-WP-13766
✓ M12 →2001
RE-BJ-4264
ø10mm
RE-BJ-0811
ø12mm
RE-LS-13461

✗ 4x4

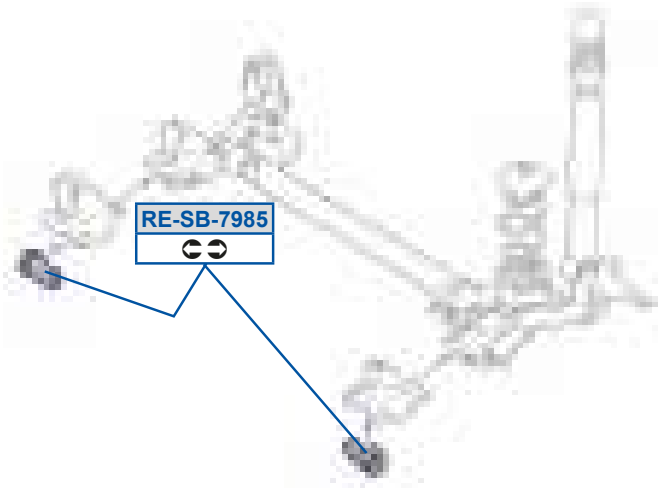
RE-SB-7985

Y9C89AB
D77779CCBD3D77779CDE8

c S5PX5B>DB
EE77EFABBE3EE78BD98F9

c S5c Y59C8>D
EE78BE988A

c S5h a58AAF
EE77A87F873EE77A8AGBC

Y9C89AF
D77779CBGE3EE78BDGBFD

c S5Sd58DE>
EE787BEB8C3EE787BEF89

c S5dP599DD
EE77BAD78B3EE77EFCEFF

c S5h a58AAG
EE77A87F7G3EE77A8AGBB

c S5Oi 58CFG
EE78BE98973EE78BEADCC

c S5Sd58DEA
EE787BEB8D3EE787BEF8A

c S5dP599DE
EE77EGGB7B

c S5h a59AEDC
F977GB9B99

c S5Oi 598F>8
EE78BEADCD

c S5Sd5E8CA
D777799E973D777799EC9

c S5dP59ABA
EE77B8G9AD3EE77B8G9BG

c S5h a59AEDD
F977GB9B97

c S5Oi 59D9D
EE78BE7EDB3EE78BE8B9C

c S5Sd5E8CB
D777799E983D777799ECA

c S5dP5>FAB
EE77FACG9G

c S5Oi 5>8FE
EE78BE7EDA3EE78BE8B9B

c S5Zd59ABD9
EE77BADE7D

c S5dP5DFBE
EE77A8BFCC

c S5Oi 5AFC9
EE78BE988A

c S5c Y59C8>B
EE78BE98973EE78BEADCC

c S5dP5EGFC
EE77A789CC3EE77A78E97

c S5PX58F99
EE78BD98F93EE78BDFB88

c S5c Y59C8>C
EE78BE988A

c S5dP5GGG>
EE77F9GC9G3EE77F9GC9Go8

c S] Of Ze

Y0] U__ S x 0Th 879r 1	8; 78F	Y0] U__	8; 78F
Y0] U__ 7Uc0] R Y0] U__ 0Yh 879r 1	8978G	Y0] U__ PS P_a 0Yh 879r 1	8; 78G

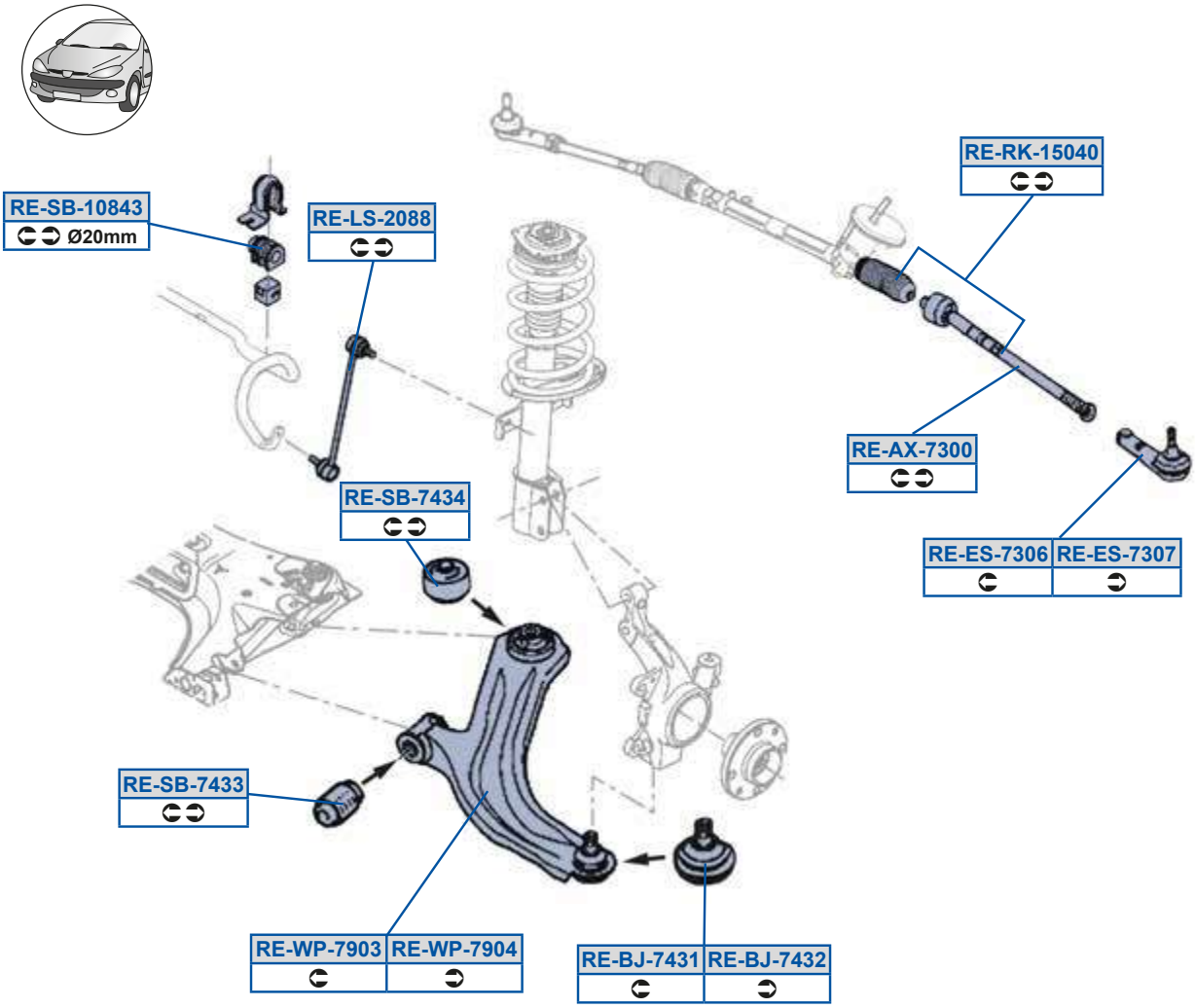

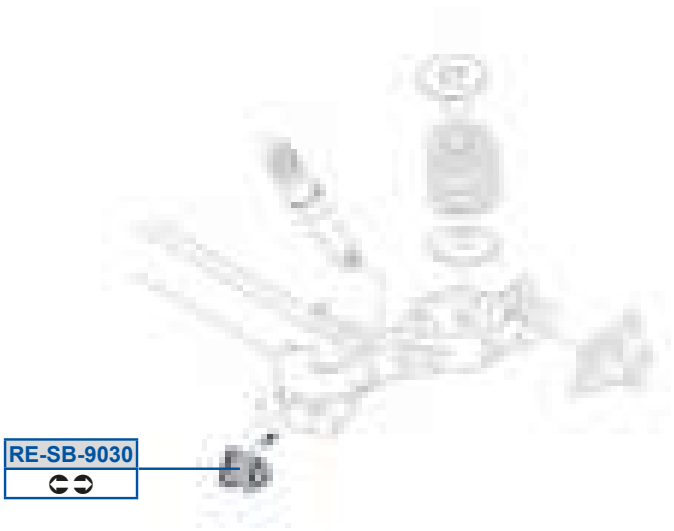

MOOG

c S5Oi 598F>8
EE78BEADCD

c S5Oi 5EA88
BFC98CD89n3BFC98CGD8n

c S5PX5EBA9
F977CFDCD /40

c S5PX5EBA>
F977CFDCE /40

c S5Sd5EA8D
EE78BEFB7E

c S5Sd5EA8E
EE78BEFB7F

c S5Zd5>8FF
F9778DD8CG3F977DDG7DC

c S5c Y59C8>B
EE78BE98973EE78BEADCC

c S5c Y59C8>C
EE78BE988A

c S5c Y59C8>D
EE78BE988A

c S5c Y59C8B8
BFC98CD89n3BFC98CGD8n

c S5dP598FBA
EE787DG8A8

c S5dP5EBAA
F977CFDCD8 /40

c S5dP5EBAB
F977CFDCD8 /40 3F977CFDCDB

c S5dP5G8A8
F977AF7GDC

c S5h a5EG8A
F977CFDCD8

c S5h a5EG8B
F977CFDCDE

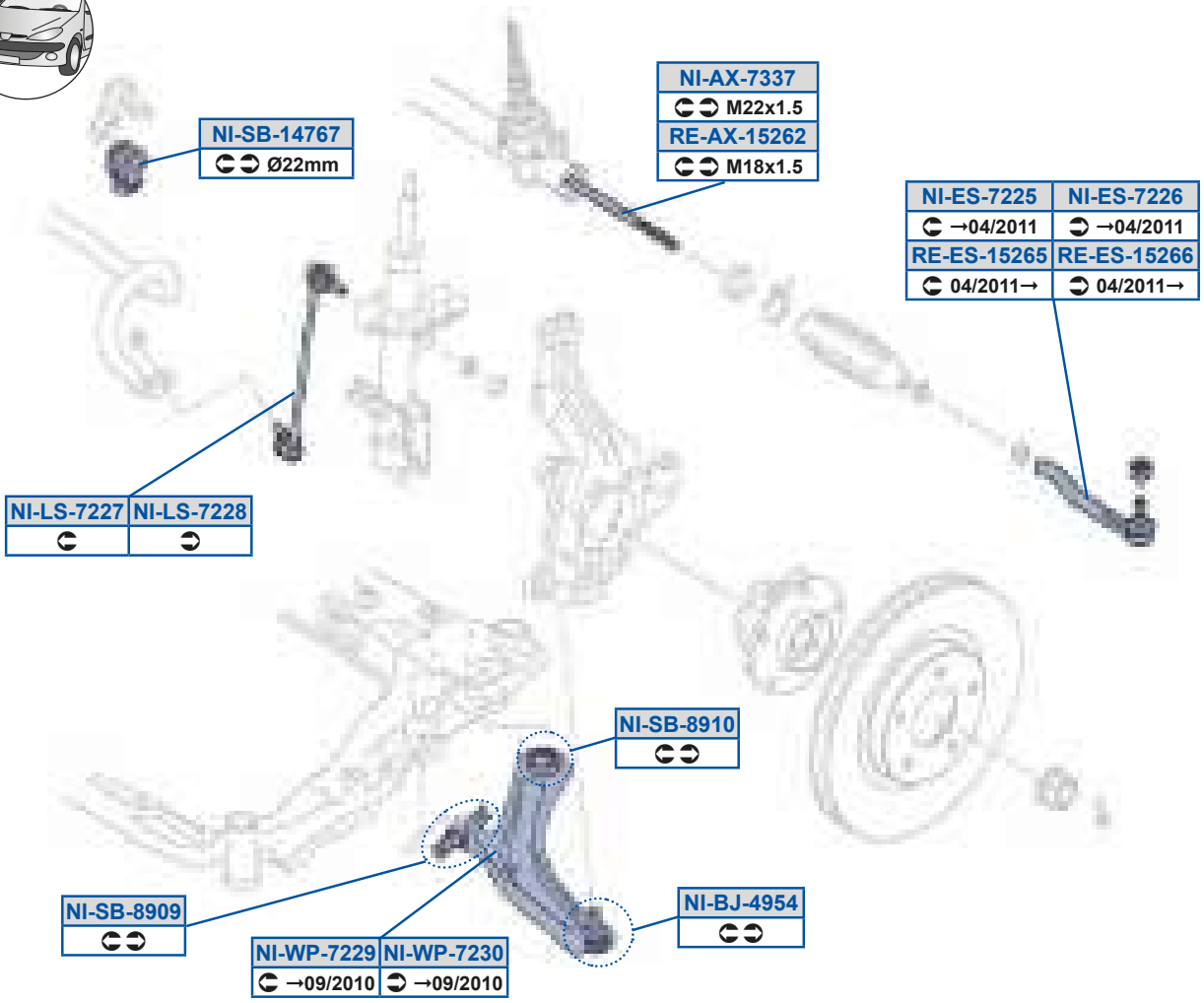
NI-SB-14767
Ø22mm
NI-AX-7337
M22x1.5
RE-AX-15262
M18x1.5
NI-ES-7225
→04/2011
NI-ES-7226
→04/2011
RE-ES-15265
04/2011→
RE-ES-15266
04/2011→
NI-LS-7227
NI-LS-7228
NI-SB-8910
NI-SB-8909
NI-BJ-4954
NI-WP-7229
→09/2010
NI-WP-7230
→09/2010

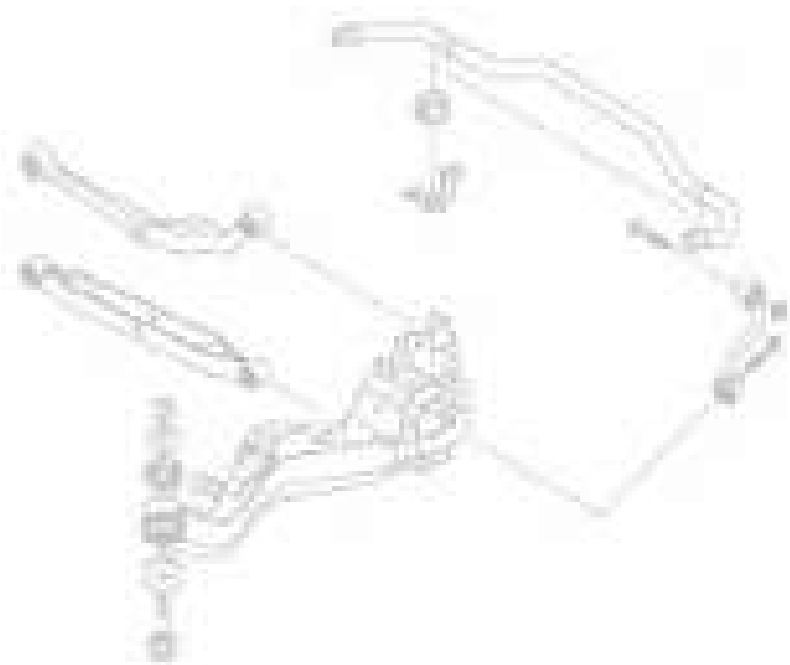

] V5Oi 5EAAE
BF778XRG77 /403RFC98XR77P

] V5dP5FG98
CBC77XR777 /40

] V5PX5BGCB
CBC77QQB70 /40

] V5h a5E>>G
CBC78XR7773CBC78XU777

] V5Sd5E>>C
BFDBEXR7803RFDB7X 770

] V5h a5E>A8
CBC77XR7773CBC77XU777

] V5Sd5E>>D
BFC9EXR7803RFC97X 770

c S5Oi 59C>D>
BFC98A79Dn

] V5Zd5E>>E
CBDDFXR770

c S5Sd59C>DC
BFC97EF89n

] V5Zd5E>>F
CBD8FXR770

c S5Sd59C>DD
BFC977D7Bn

] V5dP59BEDE

] V5dP5FG8G
CBC77XR777 /40

ZOUf] O WOPCDr 4CCDr 1	997GA 8A789	ZOUf] O WU t w OYCDr 1	8G7GC 8A789

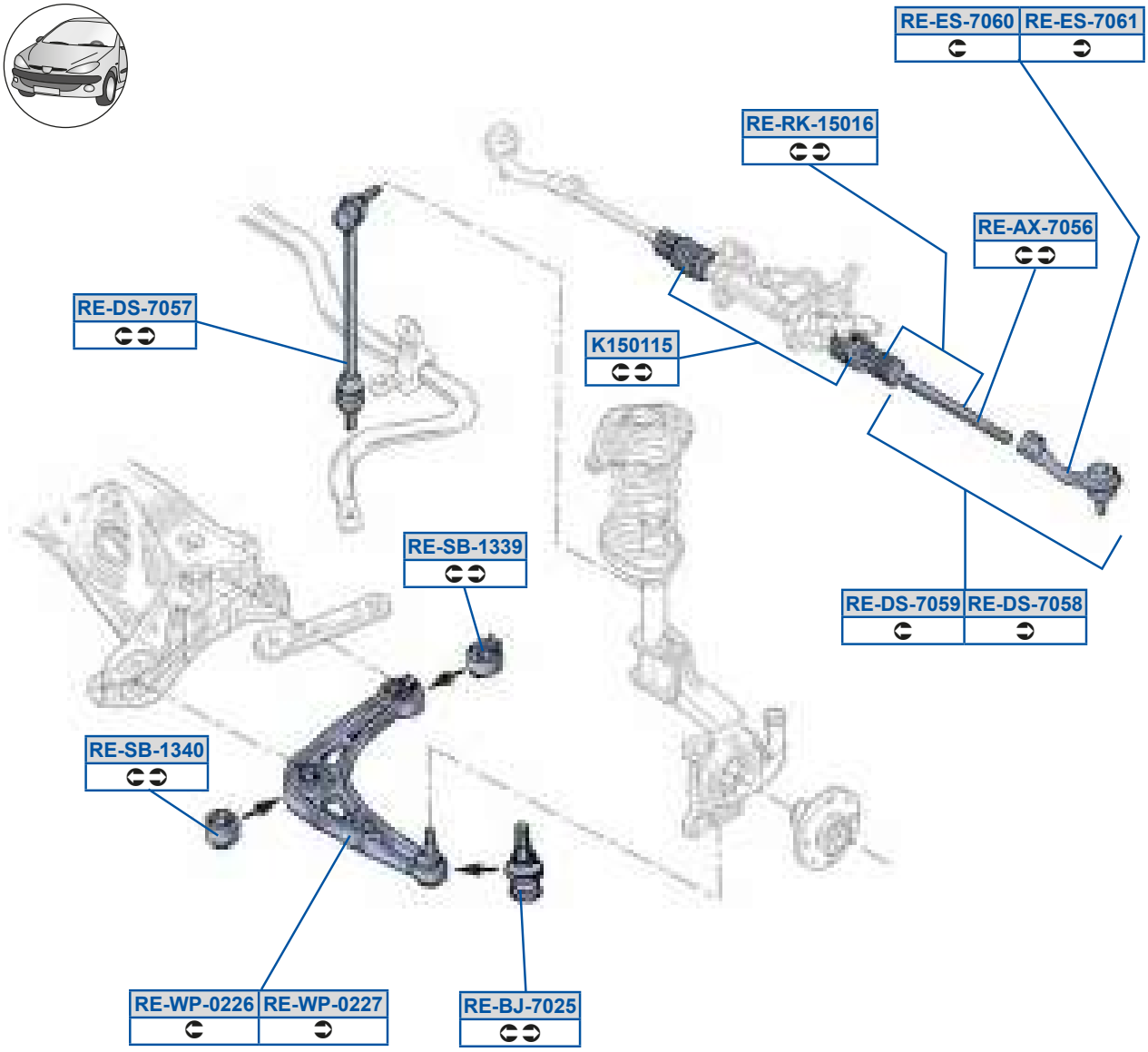

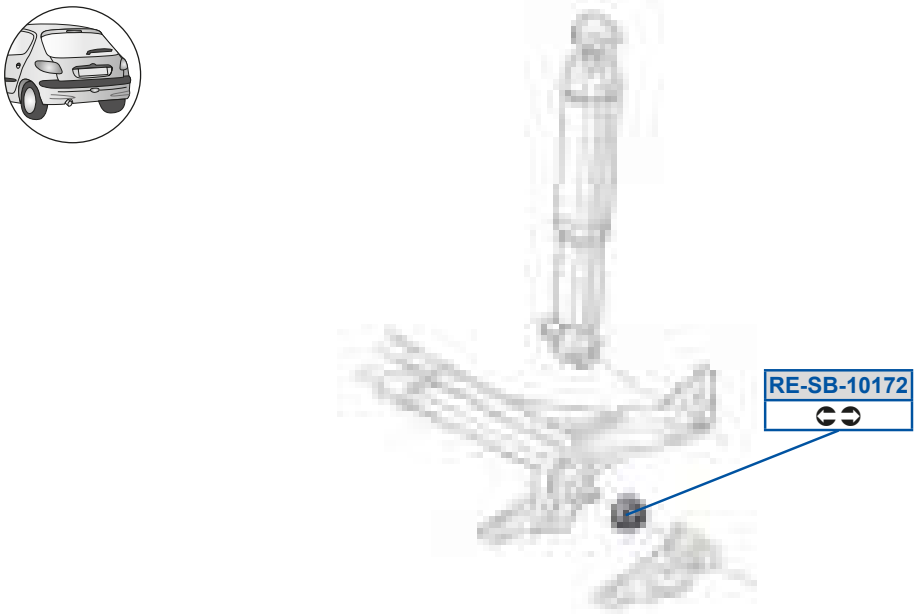

MOOG

Y9C899C
D77779CCGE3EE78BDGDCE

c S5c Y 59C89D
D777799F8G3EE78BDEC78 /40

c S5Oi 5E8CD
D777799F8G3EE78BDEC78 /40

c S5dP5989E>
EA97AC83EE77ED9FBA

c S5PX5E8>C
EE77B8FDGA3EE77B98F7B

c S5dP59AAG
EE77F9B7B9

c S5Rd5E8CE
EE77F7CBGB

c S5dP59AB8
D79CA7EEBD3EE77F99C7A

c S5Rd5E8CF
EE78BDEC79

c S5h a58>>D
EE77B8ABGA3EE77F9A7GE

c S5Rd5E8CG
EE78BDEC78

c S5h a58>>E
EE77B8ABGB3EE77DEDA9C

c S5Sd5E8D8
D777799EAD3D777799EAE

c S5Sd5E8D9
D777799EAD3D777799EAE

ZOUf] 0 WUPU879r 1	8A789	ZOUf] 0 WU t w 0YU879r 1	8A789

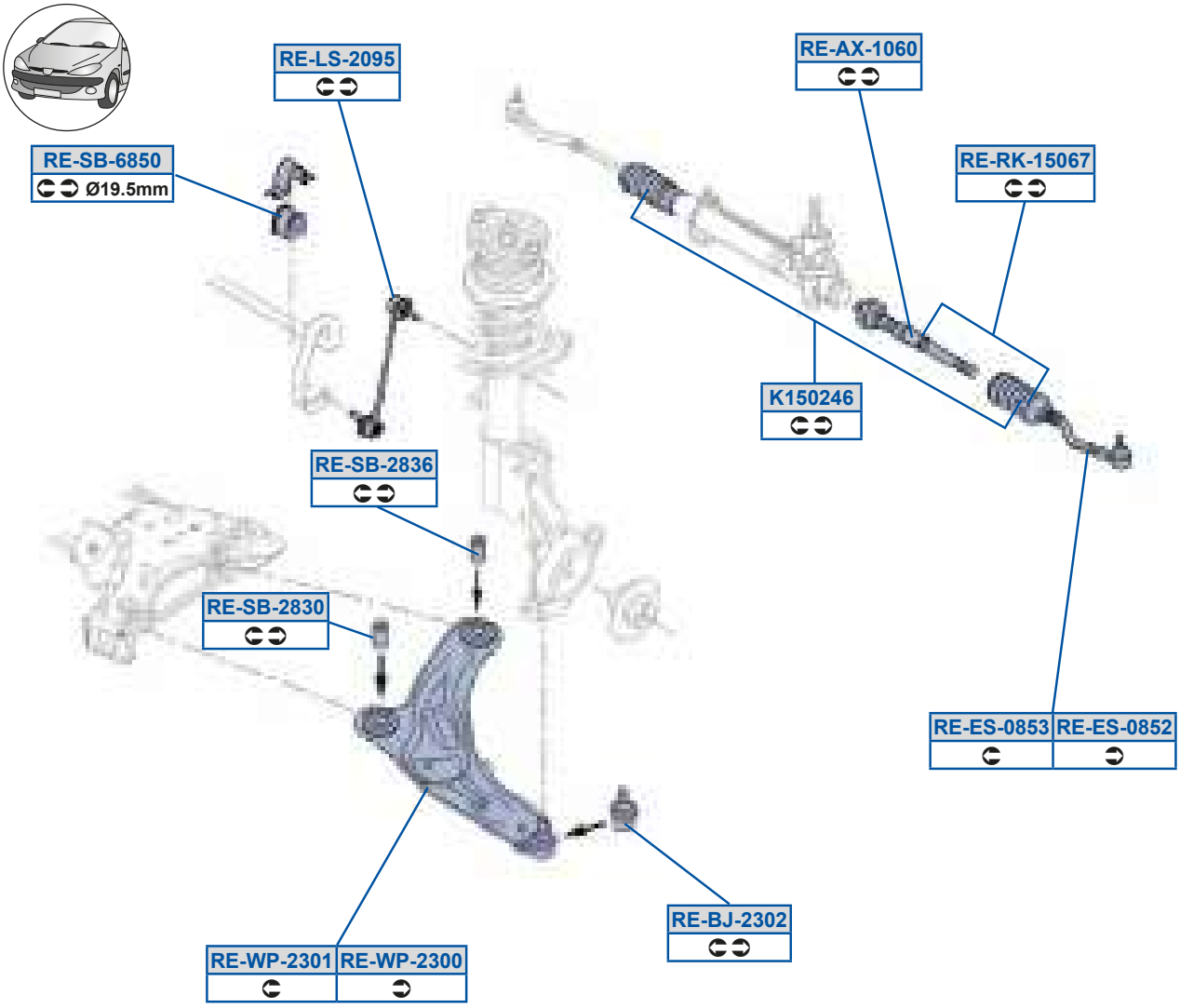

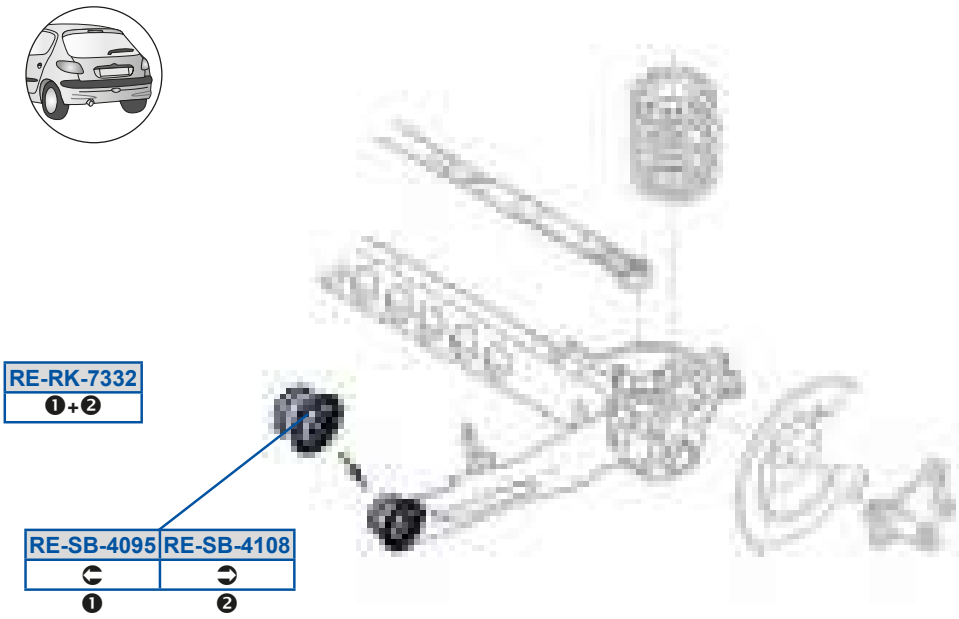

Y9C8>BD
EE78BE9EDC

c S5dP5>FA8
F977779FDF3F977AFG8AC /40

c S5Oi 598D8
EE78BE9EDD3EE78BEFCC8

c S5dP5>FAD
F977AFG8AB /40

c S5PX5>A8>
B78D7DDEDn3D7B777987C

c S5dP5B8GC
EE77B8D9E83F977B9EFDF

c S5Sd58FC>
BFC97GBBDn3EE787BG9FA

c S5dP5B98F
EE77B8CBFF3F977B9EFDG

c S5Sd58FCA
BFC979E8Bn3EE787BG9F9

c S5dP5DFC8
F9779E9CGB

c S5Zd5>8GC
F977779FE73F977DD898E

c S5h a5>A88
F97779DDCC3F9779BEG77

c S5c Y59C8DE
EE78BE9EDD3EE78BEFCC8

c S5h a5>A89
F7779EAE9F3F97779DDCB

c S5c Y5EAA>
EE7897GCAB

c S] Of Ze

ZOUf] 0 Q x 0Re8791	8G78F	ZOUf] 0 WWOPe8791	9878E
ZOUf] 0 WWU t w 0Ye8791	9878E		

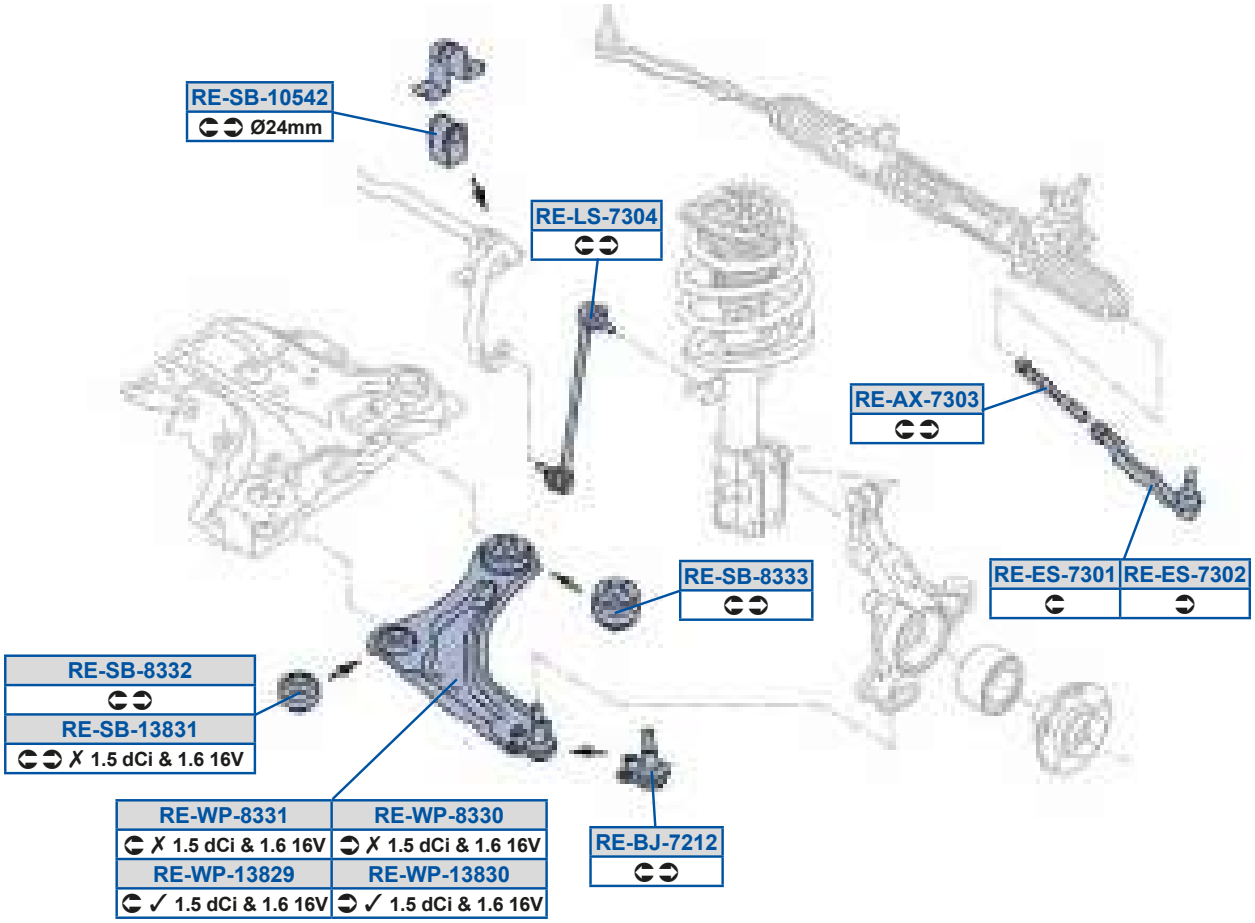

Guided Axle

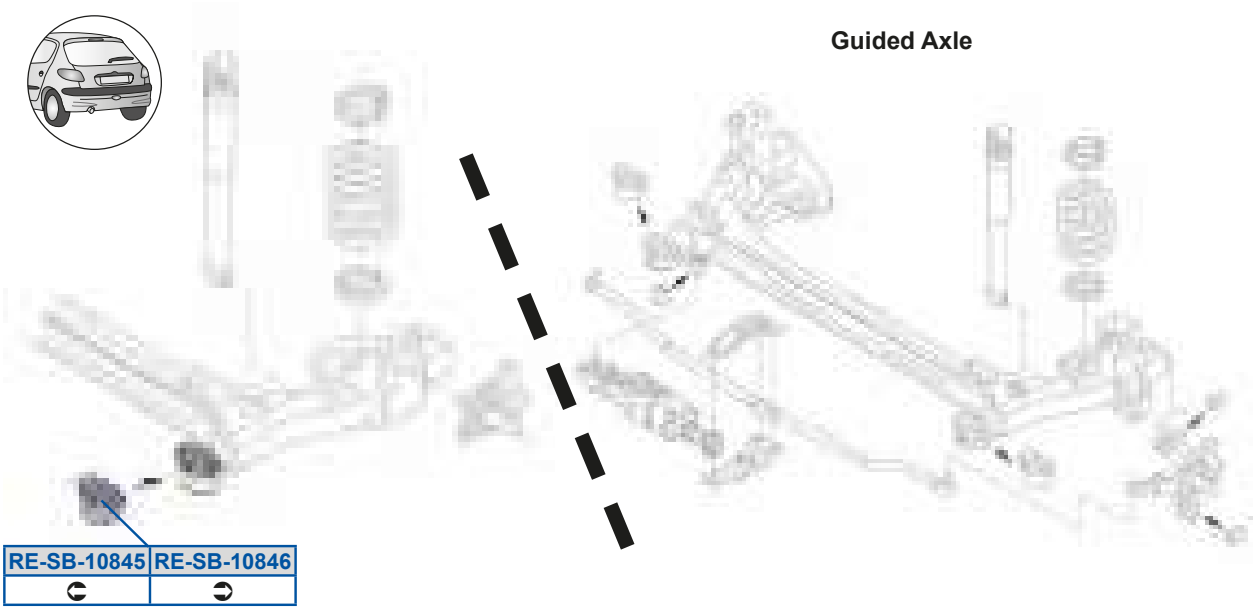

MOOG

c S5Oi 5EA8A
BFC987778n

c S5PX5E>9>
B78D7777Bn

c S5Sd5EA89
BFC977778n

c S5Sd5EA8>
BFC977779n

c S5Zd5EA8B
CBD8F7778n

c S5dP598CB>
CBD8A777n

c S5dP598FBC
CC7BC7778n

c S5dP598FBD
CC7BB7778n

c S5dP59AFA9
CB CD 777 79n

c S5dP5FAA>
CBC777778n /40

c S5dP5FAAA
CBC777778n /40

c S5h a59AF>G
CBC78777Fn

c S5h a59AFA8
CBC777778n

c S5h a5FAA8
CBC777778n3CBC777779n

c S5h a5FAA9
CBC78777Fn3CBC78777Gn

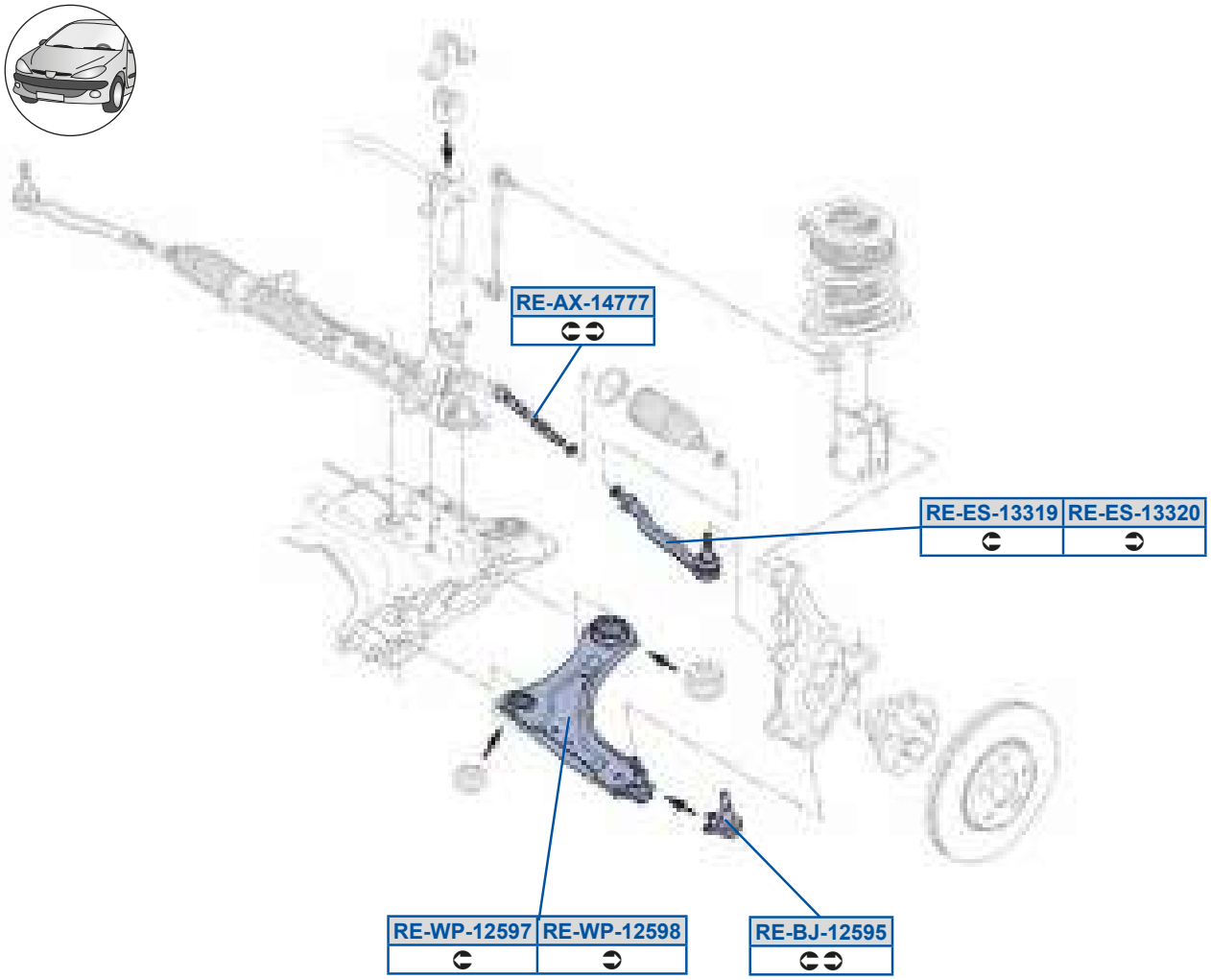
RE-AX-14777
RE-ES-13319
RE-ES-13320
RE-WP-12597
RE-WP-12598
RE-BJ-12595

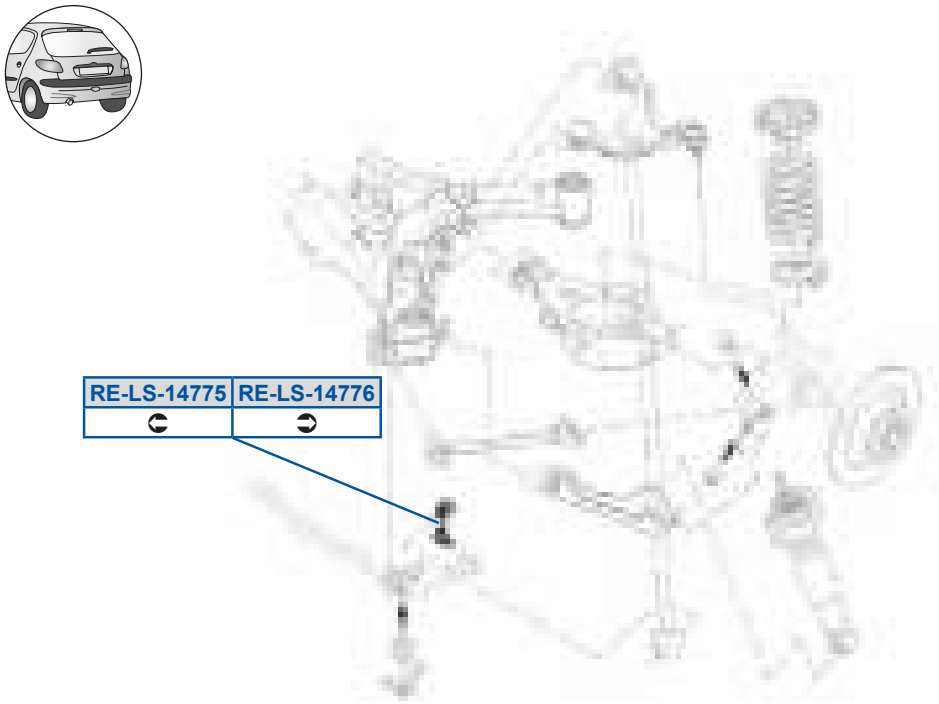
RE-LS-14775
RE-LS-14776

c S5Oi 59BEEE
BFC98FEGGn

c S5PX59>CGC
CBC77777Fn /40

c S5Sd59AA9G
BFC978C79n

c S5Sd59AA>8
BFC979EAAn

c S5Zd59BEEC
CC8877787n

c S5Zd59BEED
CC8877788n

c S5h a59>CGE
CBC787787n

c S5h a59>CGF
CBC77777Fn

c S] Of Ze

[OdeSc WP OTR1	8E7GF	[OdeSc WP OXR1	8A7GF
[OdeSc WAt y 7QÉt é OSR7VR7f R1	8E7GF		

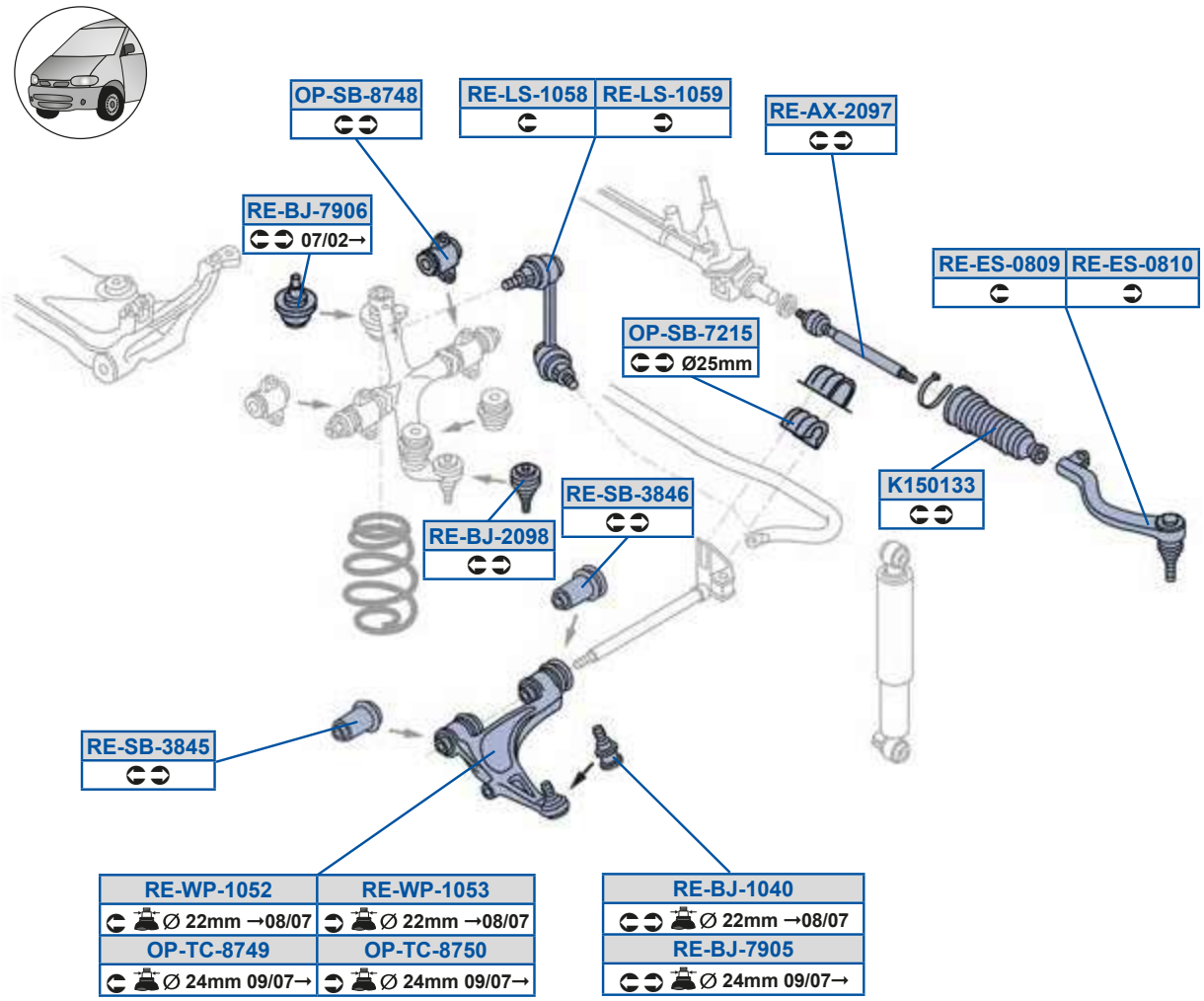

RE-SB-10929

OP-SB-15690

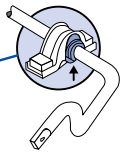

Y9C89AA
D79CAE79A8

c S5PX5>8GF
EE77A89FC8

c S5dP5AFBC
BC777GC3CBB9A77I OO

_ a5dP59CDG8
EE77DDE8FB

c S5PX5EG8C
EE787E78CB

c S5dP5AFBD
BC777GB3CBCE777I OO

_ a5dP5E>9C
EE77A7G8CB

c S5PX5EG8D
EE787CDGE7

c S5h a598C>
EE77A7988F3EE77A7G8FG

_ a5dP5FEBF
BC777G8

c S5Sd58F8G
EE78BE7ADA

c S5h a598CA
EE77A7988G3EE77A7G8G7

_ a5eQ5FEBG
F977EC79EA

c S5Sd58F98
EE78BE7ADB

_ a5eQ5FEC8
F977EC79EB

c S5Zd598CF
EE77A798DC3EE77A7G7E7

c S5Oi 5>8GE
EE78BE7AD93EE78BEFED9

c S5Zd598CG
EE77A7EABA3EE77A7G7E8

c S5PX598B8
EE77A89FC93EE787CDGDG

c S5dP598G>G
EE77A799EF

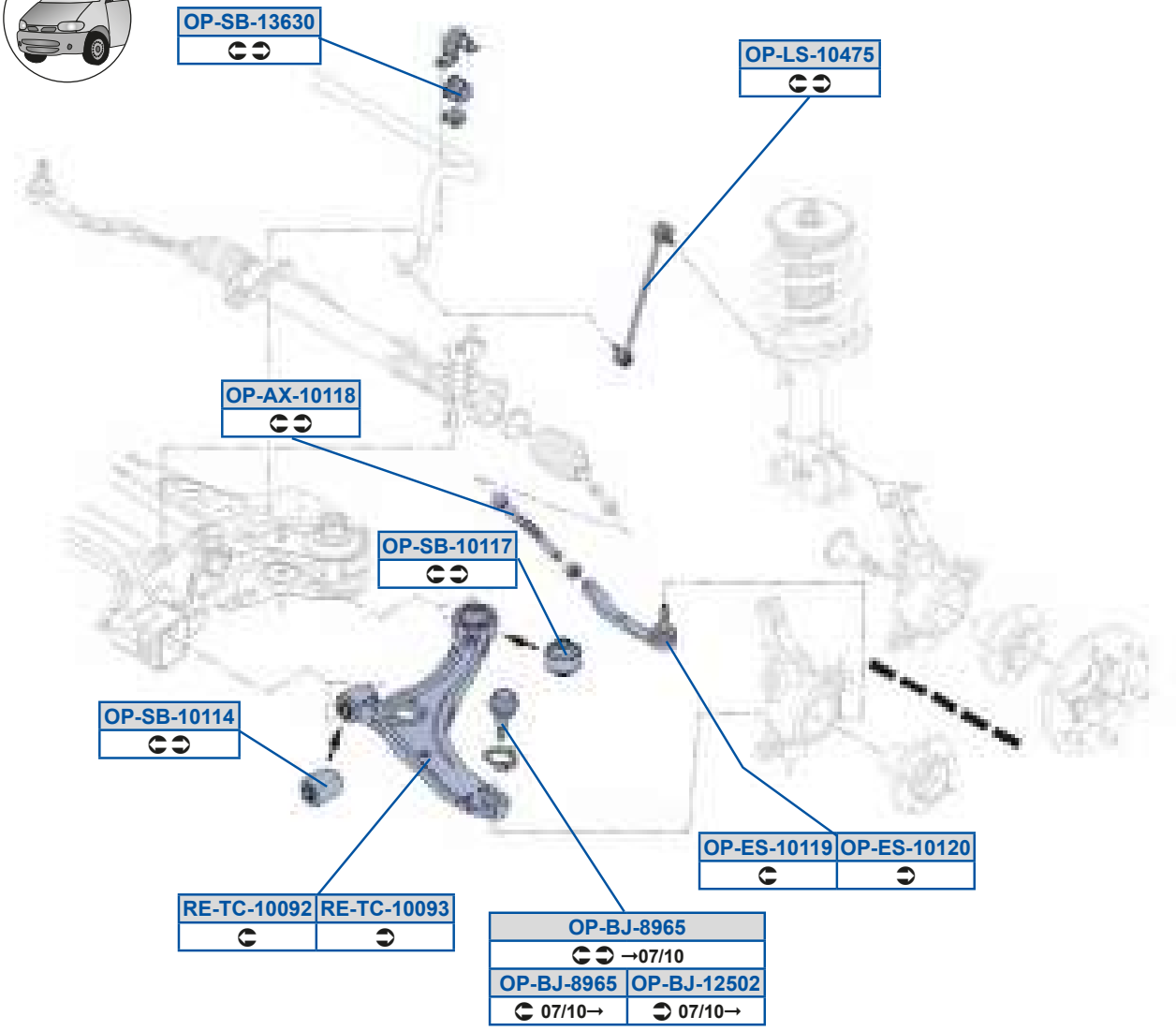
OP-SB-13630
OP-LS-10475
OP-AX-10118
OP-SB-10117
OP-SB-10114
OP-ES-10119
OP-ES-10120
RE-TC-10092
RE-TC-10093
OP-BJ-8965
→07/10
OP-BJ-8965
07/10→
OP-BJ-12502
07/10→

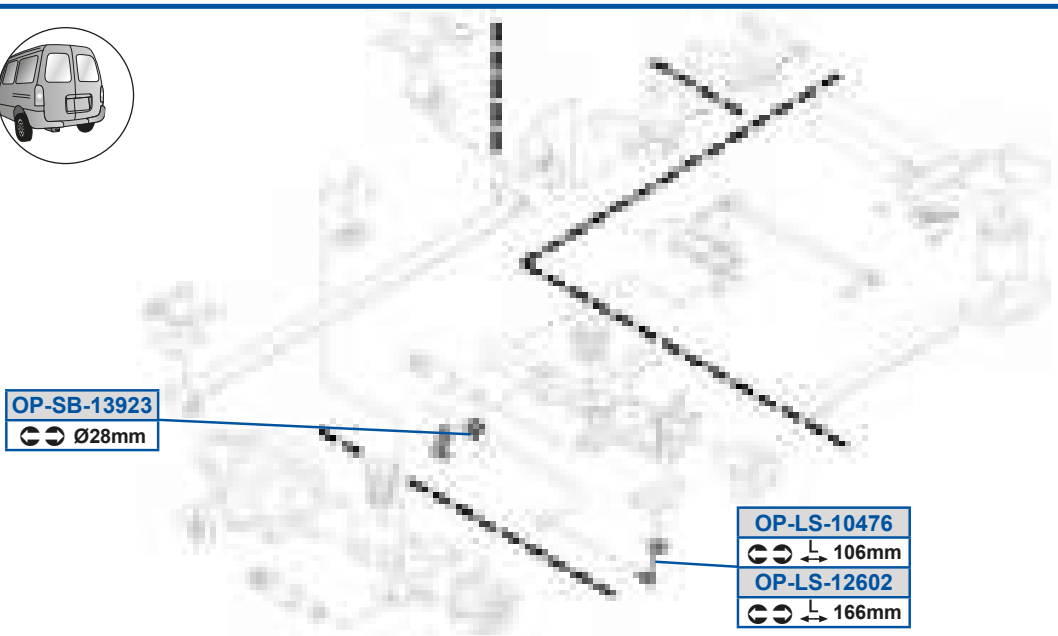
OP-SB-13923
Ø28mm
OP-LS-10476
106mm
OP-LS-12602
166mm

_ a5Oi 59899F
BFC9877I 7SoY3BFC989AEAn

_ a5PX59>C8>
B78D7FAEBn3B78D8AB8Dn

_ a5PX5FGDC
B78D8AB8Dn3F977DFFFEE

_ a5Sd59899G
BFC97DEA7n

_ a5Sd5989>8
BFC977EF7n

_ a5Zd598BEC
BB8G9G83CBD8F777Bn

_ a5Zd598BED
BB8GA7B3CC887778Gn

_ a5Zd59>D8>
BB97GCB3CC8877797n

_ a5dP59899B
F977DFFFE8 /40

_ a5dP59899E
F977DFFFE8 /40

_ a5dP59ADA8
CBD8A89CAn

_ a5dP59AG>A
CBD8ACBG7n

c S5eQ5988G>
F977DFFFEC

c S5eQ5988GA
F977DFFFE8

cS] Of Ze

[SUO] S WOP0879r1	8F7GC	9; 78B	[SUO] S WQtu é x 0S0879r1	987GD	8F78A
[SUO] S WQ t é v 0Z0879r1	8G7GD	8F78F	[SUO] S WQ t vÉ 0R0879r1	8A7GD	8F78A
[SUO] S WU t w 0Y0879r1	8A7GG	8F78A	dQS] WQ WOX0879r1	8G7GG	8G78A
dQ] WQ W[ag 0X0879r1	8A789	8F78A	[SUO] S dvx é v 0X0879r1	987GD	987GG

RE-SB-1719
⊂⊃ Ø23mm Outer
RE-SB-2835
⊂⊃ Ø24mm Outer
RE-SB-2199
⊂⊃ Ø24.5mm Outer
RE-SB-1166
⊂⊃ Ø21mm Inner
RE-SB-0296
⊂⊃ Ø23mm Inner
RE-SB-2834
⊂⊃ Ø24mm Inner
RE-SB-2211
⊂⊃ Ø24,5mm Inner
RE-SB-2238
⊂⊃ Ø25mm Inner D/Dt

RE-AX-0675	RE-AX-0676
⊂⊃ ✓ SMI ⊥ 276mm 03/96→08/98	⊂⊃ ✓ TRW ⊥ 270.5mm 03/96→08/98
RE-AX-7756	**RE-AX-0858**
⊂⊃ ✓ SMI ⊥ 275mm 08/98→04/99	⊂⊃ ✓ TRW ⊥ 303.5mm 04/99→08/03
RE-AX-0859	**RE-AX-13462**
⊂⊃ ✓ SMI ⊥ 311mm 04/99→08/03	⊂⊃ ✓ Scenic I (JA) 09/99→06/03

RE-BJ-4264
⊂⊃ ø10mm
✗ 1.9 DCi/DTi, 2.0 16V
✗ RX4
RE-BJ-0811
⊂⊃ ø12mm 10/97→
✓ 1.9 DCi/DTi, 2.0 16V
✓ Scénic
✗ RX4
RE-BJ-10718
⊂⊃ ✓ Forged arm →09/97
✓ 1.9 D/DT/dTi
✓ 1.4i, 1.6i, 1.6E, 2.0i
✗ RX4

K150110
⊂⊃ SMI →03/99 Ø12mm
K150111
⊂⊃ TRW →03/99 Ø12mm
K150134
⊂⊃ 03/99→ Ø9mm

RE-SB-9991
⊂⊃ ✗ 2.0 16V

RE-DS-0856	RE-DS-0857
⊂ →01/01	⊃ →01/01

RE-LS-4008
⊂⊃ ✓ 1.9DTi →09/97

RE-RK-15013
⊂⊃ SMI →03/99
RE-RK-15014
⊂⊃ TRW →03/99
RE-RK-15024
⊂⊃ 03/99→08/03

RE-SB-1334
⊂⊃ ✗ RX4

RE-SB-1334
⊂⊃ ✗ RX4

RE-ES-7053	RE-ES-7054
⊂ 03/96→04/99	⊃ 03/96→04/99
RE-ES-0672	**RE-ES-0673**
⊂ 04/99→08/03	⊃ 04/99→08/03

RE-WP-7033	RE-WP-7032
⊂ ✗ 1.9 DCi/DTi, 2.0 16V	⊃ ✗ 1.9 DCi/DTi, 2.0 16V
RE-WP-2037	**RE-WP-2038**
⊂ ✓ 1.9 DCi/DTi 10/97→ ✗ RX4	⊃ ✓ 1.9 DCi/DTi 10/97→ ✗ RX4

RE-LS-7977
⊂⊃ ✓ RX4

RE-SB-10172
⊂⊃ ✓ Scénic

RE-DS-13249
⊂⊃

RE-SB-10172
⊂⊃ ✓ Scénic

RE-LS-13461
⊂⊃

[vxr v W5dt v zt W
cS] Of Ze

MOOG

Y9C8998
EE78BDGBFD

c S5Oi 5EECD
EE78BE8FFC

c S5Sd58DEA
EE787BEB8D3EE787BEF8A

c S5c Y59C8>B
EE78BE98973EE78BEADCC

Y9C8999
EE78BDGBFE

c S5PX58F99
EE78BD98F93EE78BDFB88

c S5Sd5E8CA
D777799E973D777799EC9

c S5dP58>GD
EE77B9FDDC

Y9C89AB
D77779CCBD3D77779CDE8

c S5PX598E9F
EE77FABG8F3EE78BDGBDB

c S5Sd5E8CB
D777799E983D777799ECA

c S5dP5989E>
EA97AC83EE77ED9FBA

c S5Oi 58DEC
EE78BDGC79

c S5PX5B>DB
EE77EFABBE3EE78BD98F9

c S5Zd59ABD9
EE77BADE7D

c S5dP599DD
EE77BAD78B3EE77EFCEFF

c S5Oi 58DED
EE78BDG9F7

c S5Rd58FCD
EE78BDFGC9

c S5Zd5B88F
EE77FBEAF9

c S5dP59AAB
EE77EFGBEF3EE77FB7EB8

c S5Oi 58FCF
EE78BE97FE

c S5Rd58FCE
EE78BDFGCA

c S5Zd5EGEE
EE77BAE8AD

c S5dP59E9G
EE77EFB8E7

c S5Oi 58FCG
EE78BE8FBB

c S5Rd59A>BG
EE77F9E8EF

c S5c Y59C89A
EE78BE8FBB

c S5dP5>9GG
EE77B9FDDD3F9778C7ECG

c S5Oi 59ABD>
EE78BEABBA

c S5Sd58DE>
EE787BEB8C3EE787BEF89

c S5c Y59C89B
EE78BE97FE

c S5dP5>>99
EE77B9FEAF

cS] Of Ze

[SUO] S WOP0879r1	8F7GC	9; 78B	[SUO] S WQt u é x 0SO879r1	987GD	8F78A
[SUO] S WQ t é v 0ZO879r1	8G7GD	8F78F	[SUO] S WQ t vÉ 0RO879r1	8A7GD	8F78A
[SUO] S WU t w 0YO879r1	8A7GG	8F78A	dQS] WQ WOXO879r1	8G7GG	8G78A
dQ] WQ W[ag 0XO879r1	8A789	8F78A	[SUO] S dvx é v 0XO879r1	987GD	987GG

RE-SB-1719
Ø23mm Outer
RE-SB-2835
Ø24mm Outer
RE-SB-2199
Ø24.5mm Outer
RE-SB-1166
Ø21mm Inner
RE-SB-0296
Ø23mm Inner
RE-SB-2834
Ø24mm Inner
RE-SB-2211
Ø24,5mm Inner
RE-SB-2238
Ø25mm Inner D/Dt

RE-AX-0675
✓ SMI 276mm
03/96→08/98

RE-AX-0676
✓ TRW 270.5mm
03/96→08/98

RE-AX-7756
✓ SMI 275mm
08/98→04/99

RE-AX-0858
✓ TRW 303.5mm
04/99→08/03

RE-AX-0859
✓ SMI 311mm
04/99→08/03

RE-AX-13462
✓ Scenic I (JA)
09/99→06/03

RE-BJ-4264
ø10mm
✗ 1.9 DCi/DTi, 2.0 16V
✗ RX4

RE-BJ-0811
ø12mm 10/97→
✓ 1.9 DCi/DTi, 2.0 16V
✓ Scénic
✗ RX4

RE-BJ-10718
✓ Forged arm →09/97
✓ 1.9 D/DT/dTi
✓ 1.4i, 1.6i, 1.6E, 2.0i
✗ RX4

K150110
SMI →03/99
Ø12mm

K150111
TRW →03/99
Ø12mm

K150134
03/99→ Ø9mm

RE-SB-9991
✗ 2.0 16V

RE-DS-0856
→01/01

RE-DS-0857
→01/01

RE-LS-4008
✓ 1.9DTi →09/97

RE-RK-15013
SMI →03/99

RE-RK-15014
TRW →03/99

RE-RK-15024
03/99→08/03

RE-SB-1334
✗ RX4

RE-SB-1334
✗ RX4

RE-ES-7053
03/96→04/99

RE-ES-7054
03/96→04/99

RE-ES-0672
04/99→08/03

RE-ES-0673
04/99→08/03

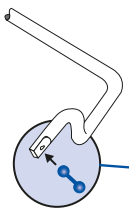

RE-LS-7977
✓ RX4

RE-WP-7033
✗ 1.9 DCi/DTi, 2.0 16V

RE-WP-7032
✗ 1.9 DCi/DTi, 2.0 16V

RE-WP-2037
✓ 1.9 DCi/DTi 10/97→
✗ RX4

RE-WP-2038
✓ 1.9 DCi/DTi 10/97→
✗ RX4

RE-SB-10172
✓ Scénic

RE-DS-13249

RE-SB-10172
✓ Scénic

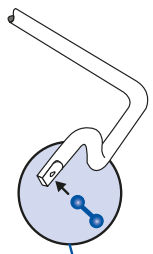

RE-LS-13461

c S5dP5>>AF
EE77FBEAFA

c S5dP5>FAB
EE77FACG9G

c S5dP5>FAC
EE77EFB8E8

c S5dP5GGG9
EE77FAC9CB3EE77FAC9CBo8

c S5h a5>8AE
EE77B9CE9B3EE77BA7EDC

c S5h a5>8AF
EE77BA7EDD3F977EAE8AA

c S5h a5E8A>
EE77BA7FA93EE77BADA7A

c S5h a5E8AA
EE77BA7FA83EE77BADA79

cS] Of Ze

[SUO] S WOP[879r 4Q[879r 1	8G78; 89799	[SUO] S WQ 5Qt u é x OS[879r 1	8G78A 9; 78G
[SUO] S WS t x OY[879r 1	8F78A 8F79;	[SUO] S Wdt OZ[879r 1	8F78A
Uc O] R dQS] WQ WOX[879r 1	8B78B	Uc O] R dQ] WQ WOX[879r 1	8D78D 9978F
dQS] WQ WOX[879r 1	8D78A	dQ] WQ WOX[879r 1	8D78A 8E798

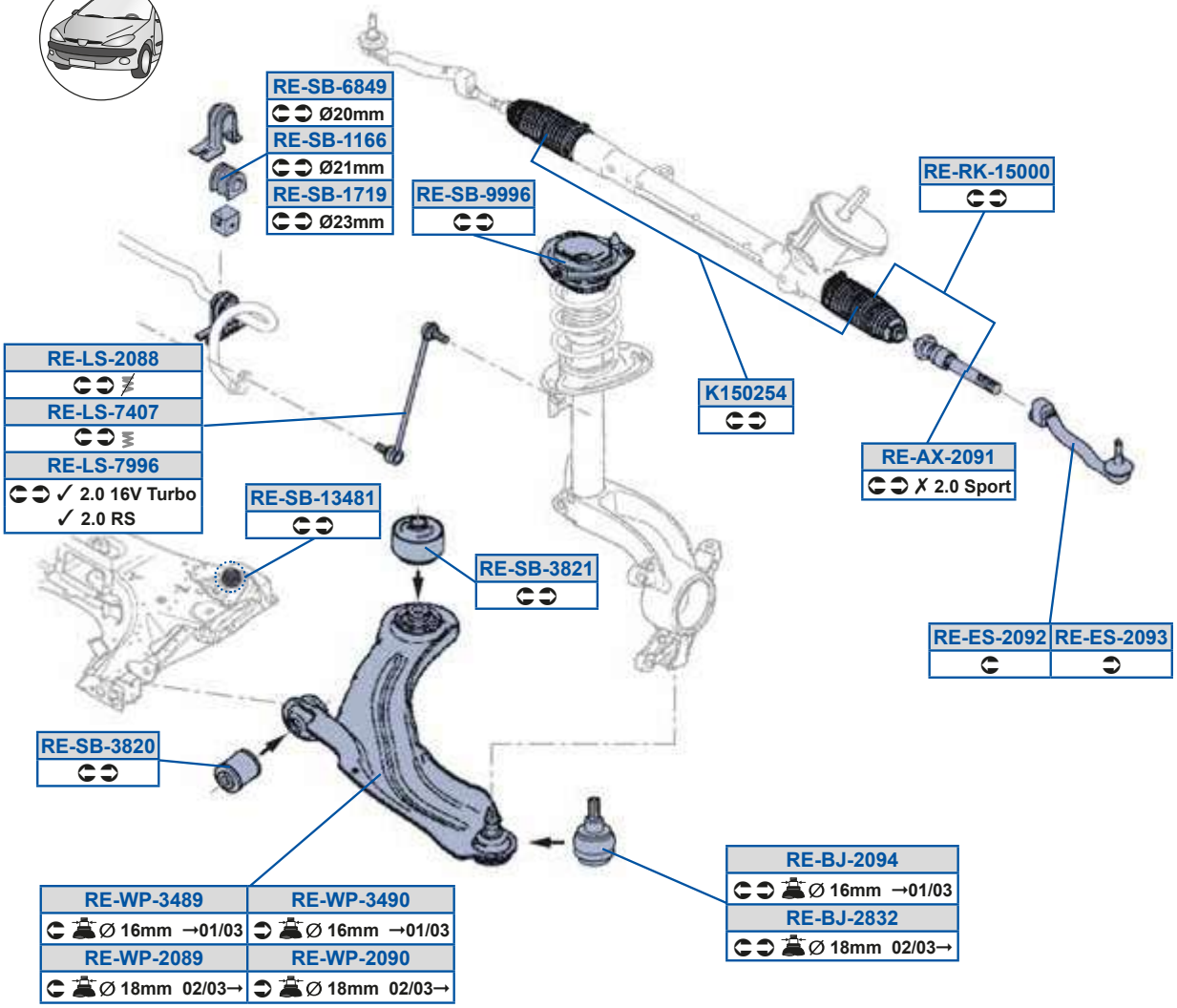

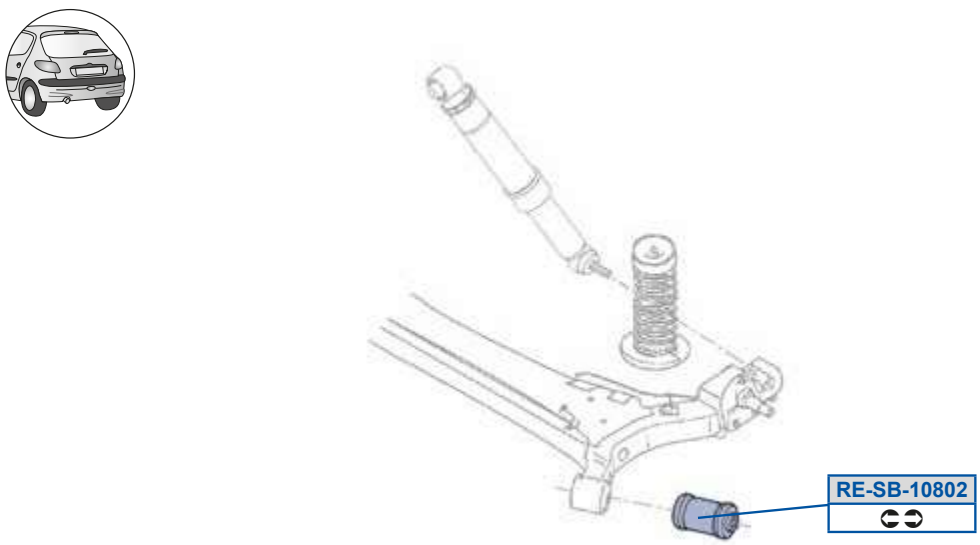

MOOG

Y9C8>CB
EE78BEBBBE

cS5Zd5EGGD
F9779DC98E3F977DFD78D

cS5dP5DFBG
EE787CDDEF

cS5Oi 5>8G9
EE78BEBBBF3EE78BEBBBF /40

cS5cY59C888
EE78BEBBBF3EE78BEBBBF /40

cS5dP5GGGD
EE7897EDEF3F977999BDA

cS5PX5>8GB
F9779GFED73F9779GFED8

cS5dP598F8>
F9777AF9BA

cS5h a5>8FG
CBC7CA8E7n3CBC7CGAACn

cS5PX5>FA>
B78D7BEGAn3F9779GFBCCo

cS5dP599DD
EE77BAD78B3EE77EFCEFF

cS5h a5>8G8
CBC77A7AEn3CBC7B78A8n

cS5Sd5>8G>
EE787CBCFA3EE787CBCFC

cS5dP59ABF9
F977EB9G7D

cS5h a5ABFG
F9779CCED7

cS5Sd5>8GA
EE787CBCFB3EE78BEBEGD

cS5dP59E9G
EE77EFB8E7

cS5h a5ABG8
F9779CCED8

cS5Zd5>8FF
F9778DD8CG3F977DDG7DC

cS5dP5AF>8
F9779B979C

cS5Zd5EB8E
F9778DD8D73F977DDG7DD

cS5dP5AF>9
F9777B88DD

cS] Of Ze

[SUO] S WWQ x ORI 879r 1	9978F	[SUO] S WWVt vÉut v OPI 8r 1	9978F
Uc O] R dQS] VQ WWOXI 879r 1	8; 78G	Uc O] R dQ] VQ WWOXI 879r 1	8; 78G
[SUO] S QQ OSI 879r 1	8D798	[SUO] S WWU t w OYI 8791	9978F
dQS] VQ WWOXI 879r 1	8; 78G	dQ] VQ WWOXI 879r 1	8; 78G

✗ RS

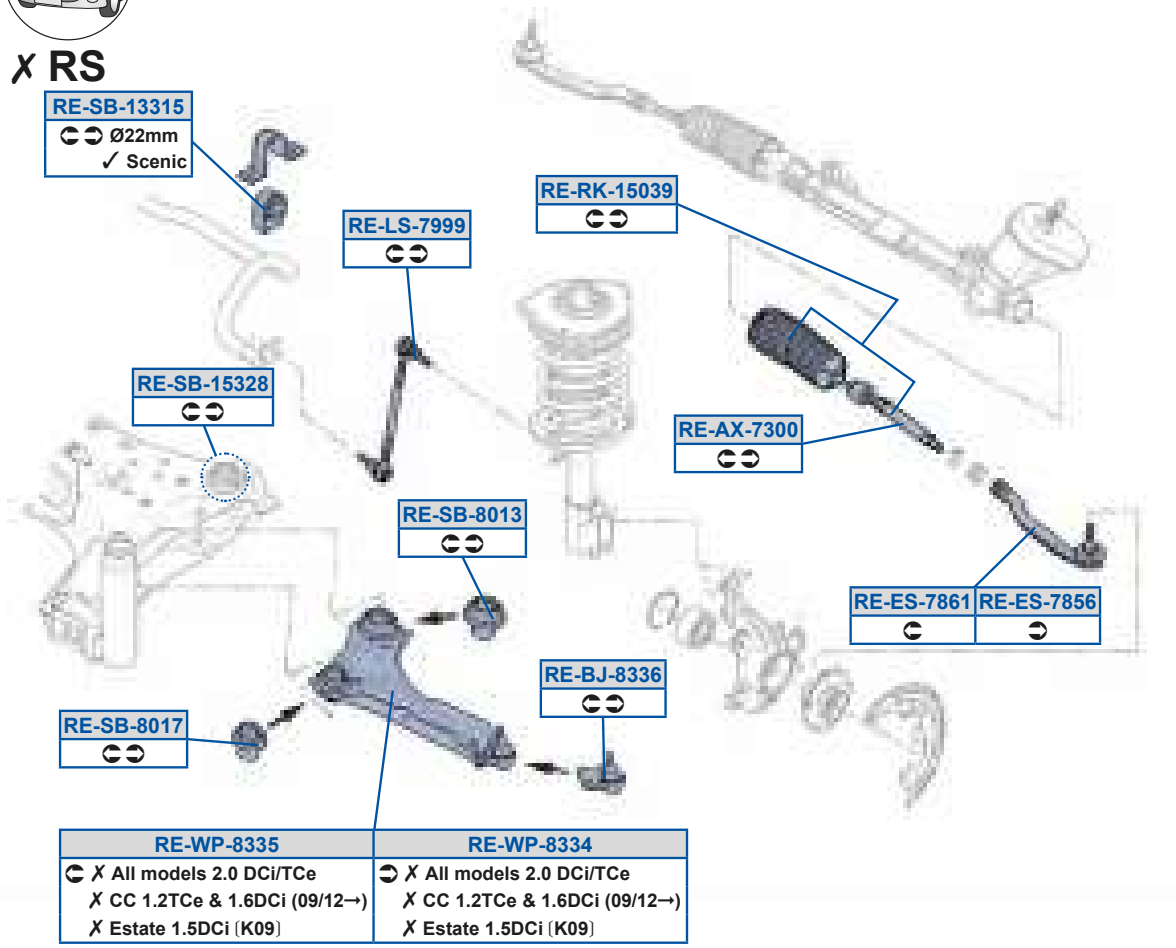

MOOG

c S5Oi 5EA88
BFC98CD89n3BFC98CGD8n

c S5PX5FAAD
B78D7G7D7n

c S5Sd5EFCD
BFC97BDF7n

c S5Sd5EFD9
BFC979E87n

c S5Zd5EGGG
CBD8F7779n

c S5cY59C8AG
BFC98CD89n3BFC98CGD8n

c S5dP598F8A
BF7F7777An3CC7BBCABBn

c S5dP59AA9C
CBD89777En

c S5dP59CA>F
CBCD78DFBn3D7B797CD9A

c S5dP5F89A
CBC77G97En /40

c S5dP5F89E
CBC77G97En /40

c S5h a5FAAB
CBC77FDF9n3CBC77G97En

c S5h a5FAAC
CBC78B7CCn3CBC78F8GBn

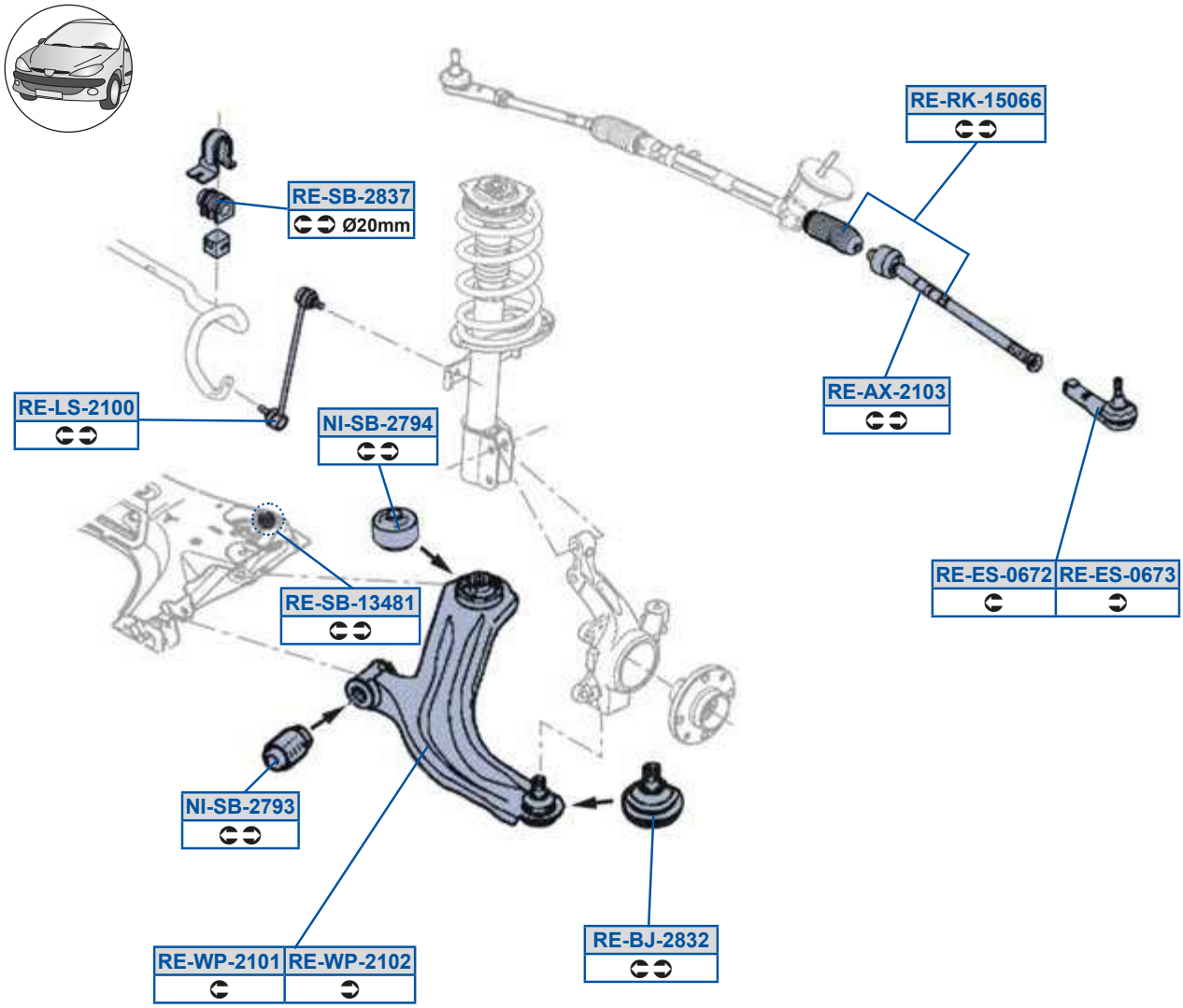
RE-RK-15066
RE-SB-2837
Ø20mm
RE-LS-2100
NI-SB-2794
RE-AX-2103
RE-ES-0672
RE-ES-0673
RE-SB-13481
NI-SB-2793
RE-BJ-2832
RE-WP-2101
RE-WP-2102

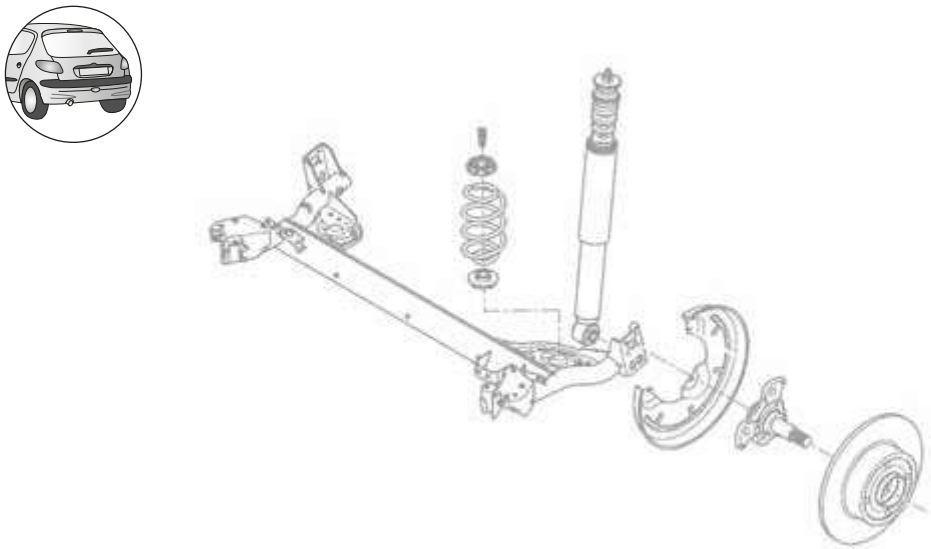

] W8dP5>EGA
CBCD70 D77

c S5dP59ABF9
F977EB9G7D

] W8dP5>EGB
CBCD70 D77

c S5dP5>FAE
EE787CGDE9

c S5Oi 5>98A
EE78BECFB8

c S5h a5>989
F977ABDGB83F977D8C7CE

c S5PX5>FA>
B78D7BEGAn3F9779GFBCCo

c S5h a5>98>
F977ABDGB93F977D8C7CF

c S5Sd58DE>
EE787BEB8C3EE787BEF89

c S5Sd58DEA
EE787BEB8D3EE787BEF8A

c S5Zd5>988
CC887EG8Dn3F97789EA7F

c S5c Y59C8DD
EE78BECFB8

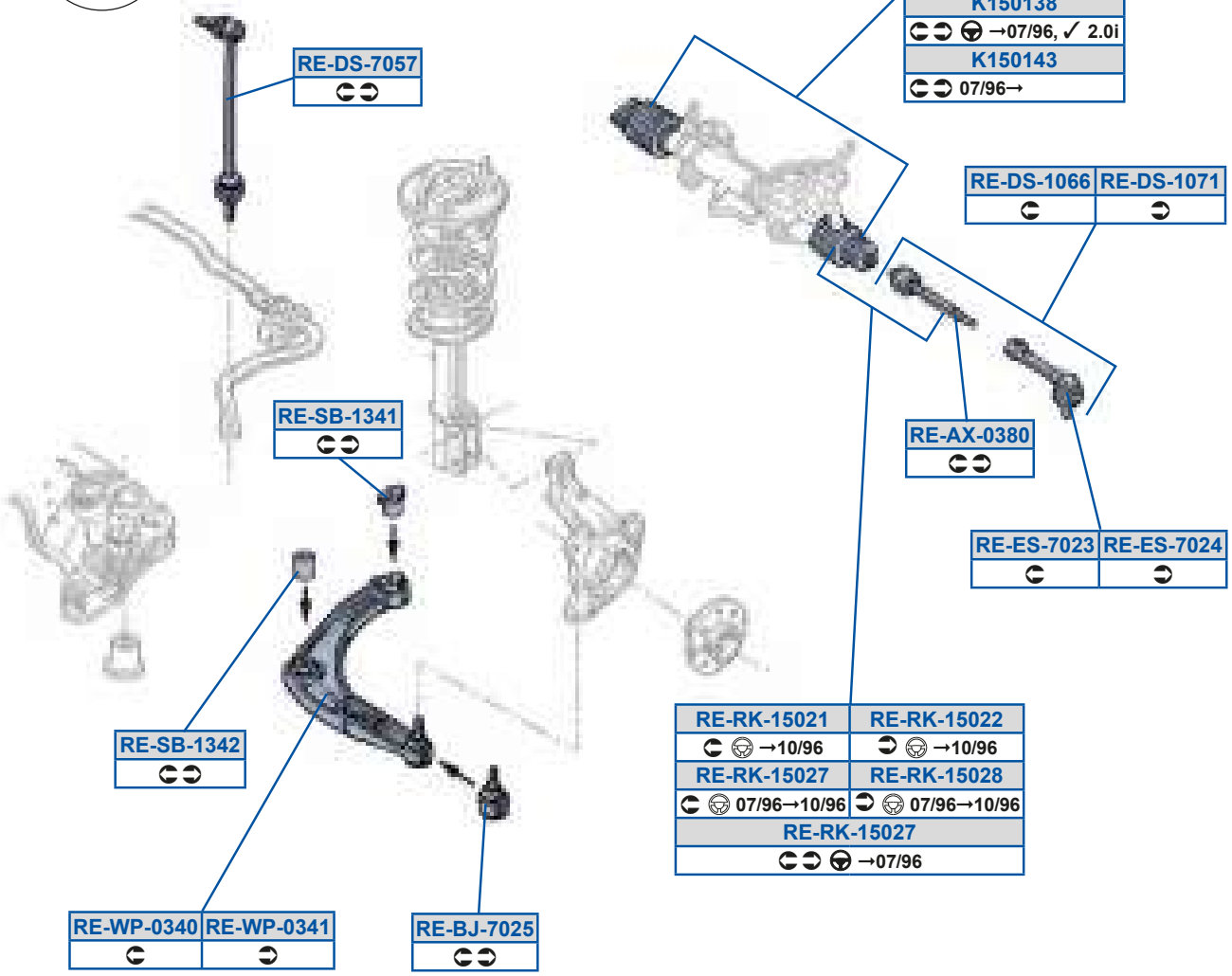
RE-DS-7057
K150131
→07/96
K150135
→07/96, ✗ 2.0i
K150138
→07/96, ✓ 2.0i
K150143
07/96→
RE-DS-1066
RE-DS-1071
RE-SB-1341
RE-AX-0380
RE-ES-7023
RE-ES-7024
RE-SB-1342
RE-RK-15021
→10/96
RE-RK-15022
→10/96
RE-RK-15027
07/96→10/96
RE-RK-15028
07/96→10/96
RE-RK-15027
→07/96
RE-WP-0340
RE-WP-0341
RE-BJ-7025

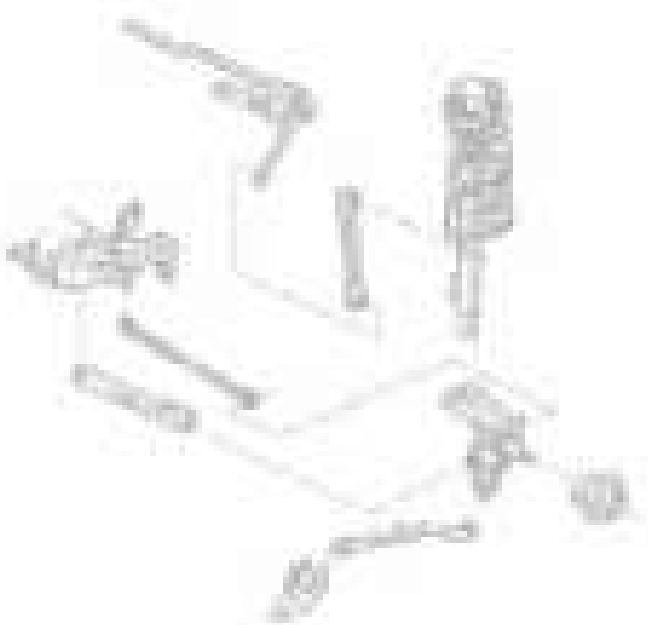

Y9C89BA
EE78BDGCDC3EE78BDGCDE

c S5c Y59C8>9
D777799F9C3EE78BDDEGG

c S5Oi 58AF8
D777799F9C3EE78BDDEGG

c S5c Y59C8>>
D777799F9C3EE78BDDEGG

c S5PX5E8>C
EE77B8FDGA3EE77B98F7B

c S5c Y59C8>E
D777799F9C3EE78BDDEGG

c S5Rd598DD
EE78BDEFCF3EE78BDF9E9

c S5c Y59C8>F
D777799F9C3EE78BDDEGG

c S5Rd598E9
EE78BDDF773EE78BDEFCG

c S5dP59AB9
EE77F7D9AF3EE77F7D9AG

c S5Rd5E8CE
EE77F7CBGB

c S5dP59AB>
EE77F7D9AF3EE77F7D9AG

c S5Sd5E8>A
D777799E8B

c S5h a58AB8
EE77F7ECF73EE77F9ACF7

c S5Sd5E8>B
D777799E8C

c S5h a58AB9
EE77F7ECF83EE77F9ACF8

cS] Of Ze

ecOTWQ WWP 0TZ1	8A789	ecOTWQ WWP 0XZ1	8A789
ecOTWQ WWa t y 7QÉt é 0SZ1	8A789		

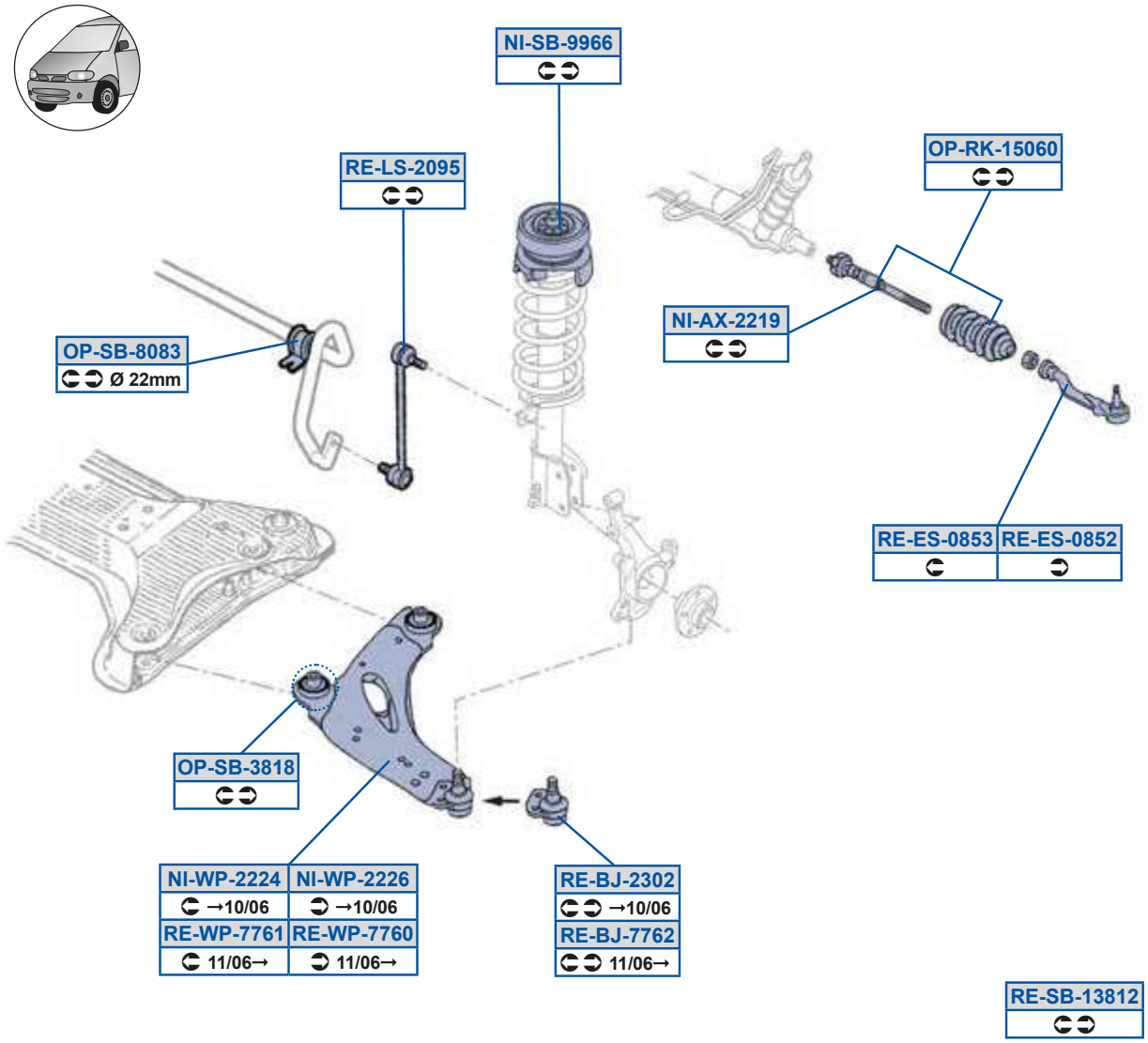

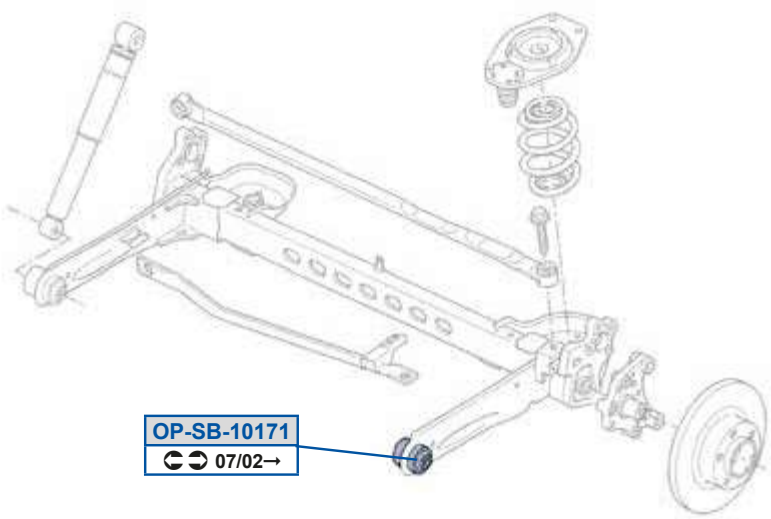

] V5Oi 5>>9G
EE78BEAAAA

c S5PX5>A8>
B78D7DDEDn3D7B777987C

] V5dP5GGDD
CBA9777I 003EE7897EBG8

c S5PX5EED>
EE78BEEAFC

] V5h a5>>>B
BB7FGCF3BB89GAB

c S5Sd58FC>
BFC97GBBDn3EE787BG9FA

] V5h a5>>>D
BB7FGCG3BB89GAD

c S5Sd58FCA
BFC979E8Bn3EE787BG9F9

_ a5c Y59C8D8
EE78BEAAAA

c S5Zd5>8GC
F977779FE73F977DD898E

_ a5dP5989E9
F9777AG8A93F977BA8DEC

c S5dP59AF9>
F977D9DGDC

_ a5dP5AF9F
F9777BGD9B

c S5h a5EED8
F977AGC7AB3F977D9DGD8

_ a5dP5F8FA
F9777BF8EEo3F9777D9G8F7o

c S5h a5EED9
F9777CB77A3F9779BEFGF

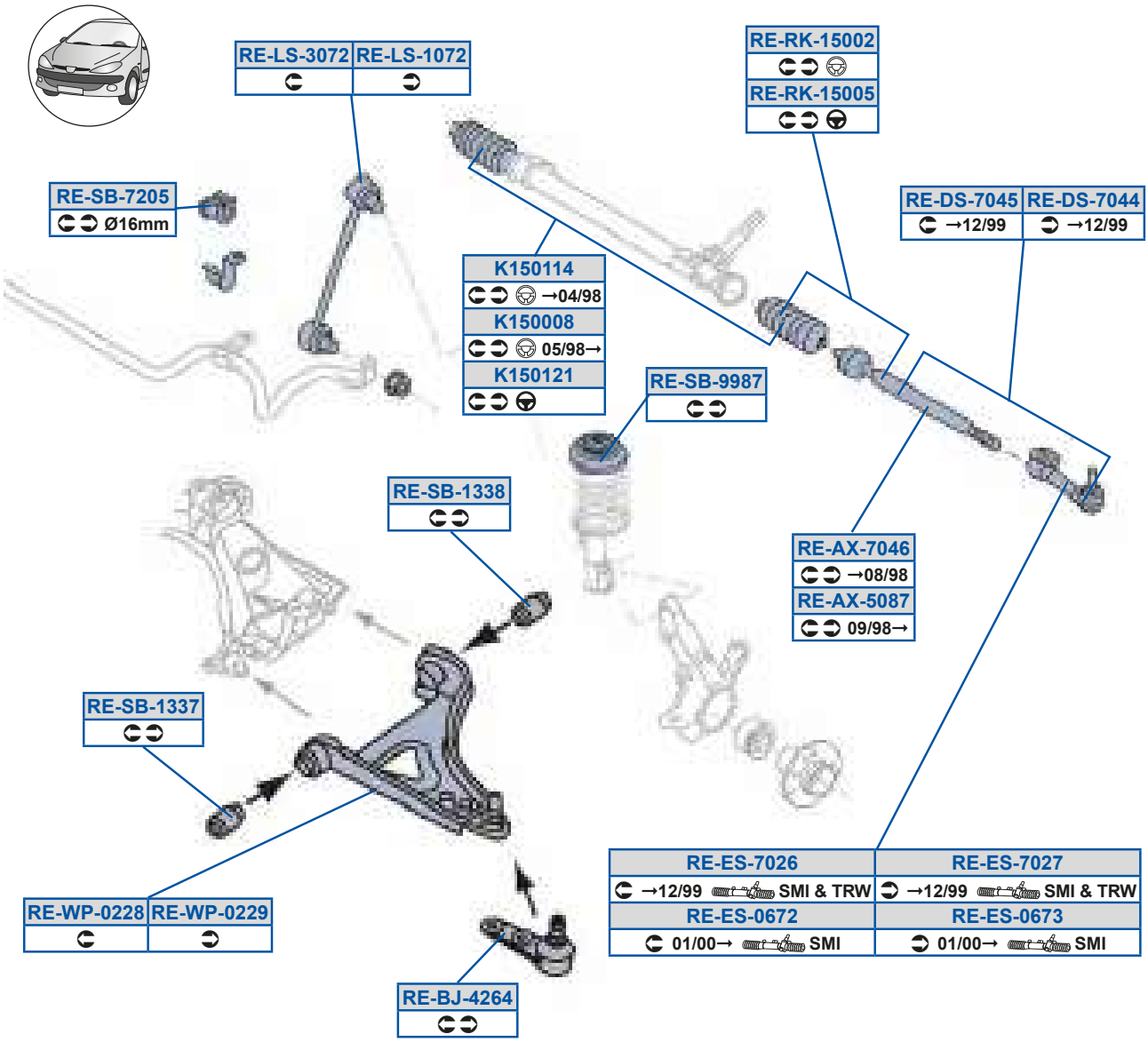
RE-LS-3072
RE-LS-1072
RE-RK-15002
RE-RK-15005
RE-SB-7205
Ø16mm
RE-DS-7045
→12/99
RE-DS-7044
→12/99
K150114
→04/98
K150008
05/98→
K150121
RE-SB-9987
RE-SB-1338
RE-AX-7046
→08/98
RE-AX-5087
09/98→
RE-SB-1337
RE-ES-7026
→12/99 SMI & TRW
RE-ES-7027
→12/99 SMI & TRW
RE-ES-0672
01/00→ SMI
RE-ES-0673
01/00→ SMI
RE-WP-0228
RE-WP-0229
RE-BJ-4264

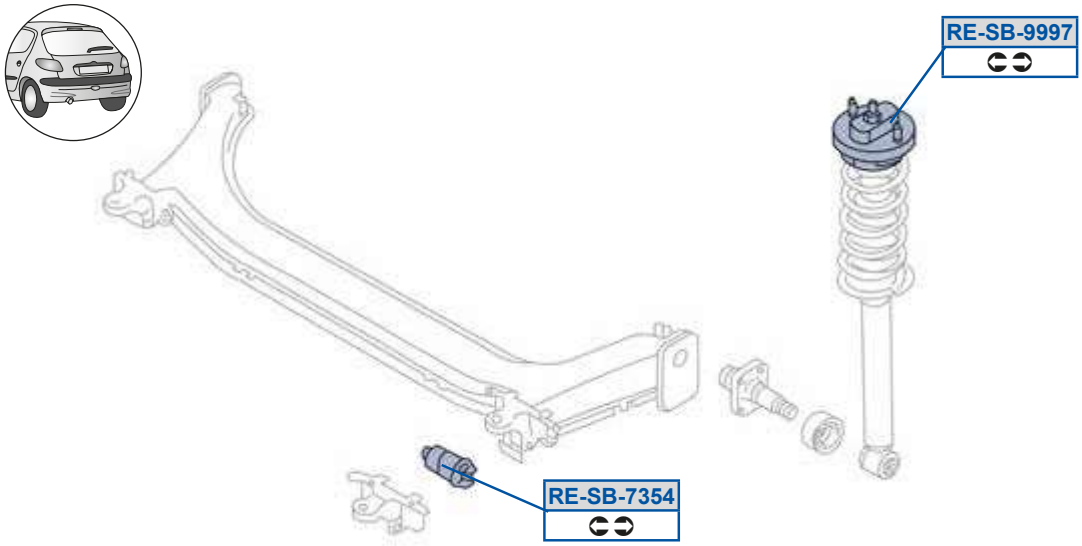
RE-SB-9997
RE-SB-7354

Y9C888F
EE77DEFDBG3EE77EF87GE

c S5Sd58DE>
EE787BEB8C3EE787BEF89

c S5dP59AAE
EE77F8GG9F3EE77FA8ADB

Y9C899B
EE78BDGBGE

c S5Sd58DEA
EE787BEB8D3EE787BEF8A

c S5dP59AAF
EE77F8GG9G3F977DC88DB

Y9C89>9
EE78BDGD8E

c S5Sd5E8>D
D777799EA7

c S5dP5E>8C
F97779BAEA

c S5Oi 5C8FE
EE78BEABGF

c S5Sd5E8>E
D777799EA8

c S5dP5EACB
EE77F988DE

c S5Oi 5E8BD
EE78BDE98F /4CBEE78BDGC8E

c S5Zd598E>
F9777B7EG8F3F9777C77EG

c S5dP5GGFE
EE77F9EBAC3EE77F9EBACo9

c S5PX5B>DB
EE77EFABBE3EE78BD98F9

c S5Zd5A8E>
F9777B7D8F3F977E8BBBD

c S5dP5GGGE
EE77FBDG8D

c S5Rd5E8BB
EE78BDE98G

c S5cY59C88>
EE78BEABGF

c S5h a58>>F
EE77F9779F3F977EAE89C

c S5Rd5E8BC
EE78BDE98F

c S5cY59C88C
EE78BEABGF

c S5h a58>>G
EE77F9779G3F977EAE89D

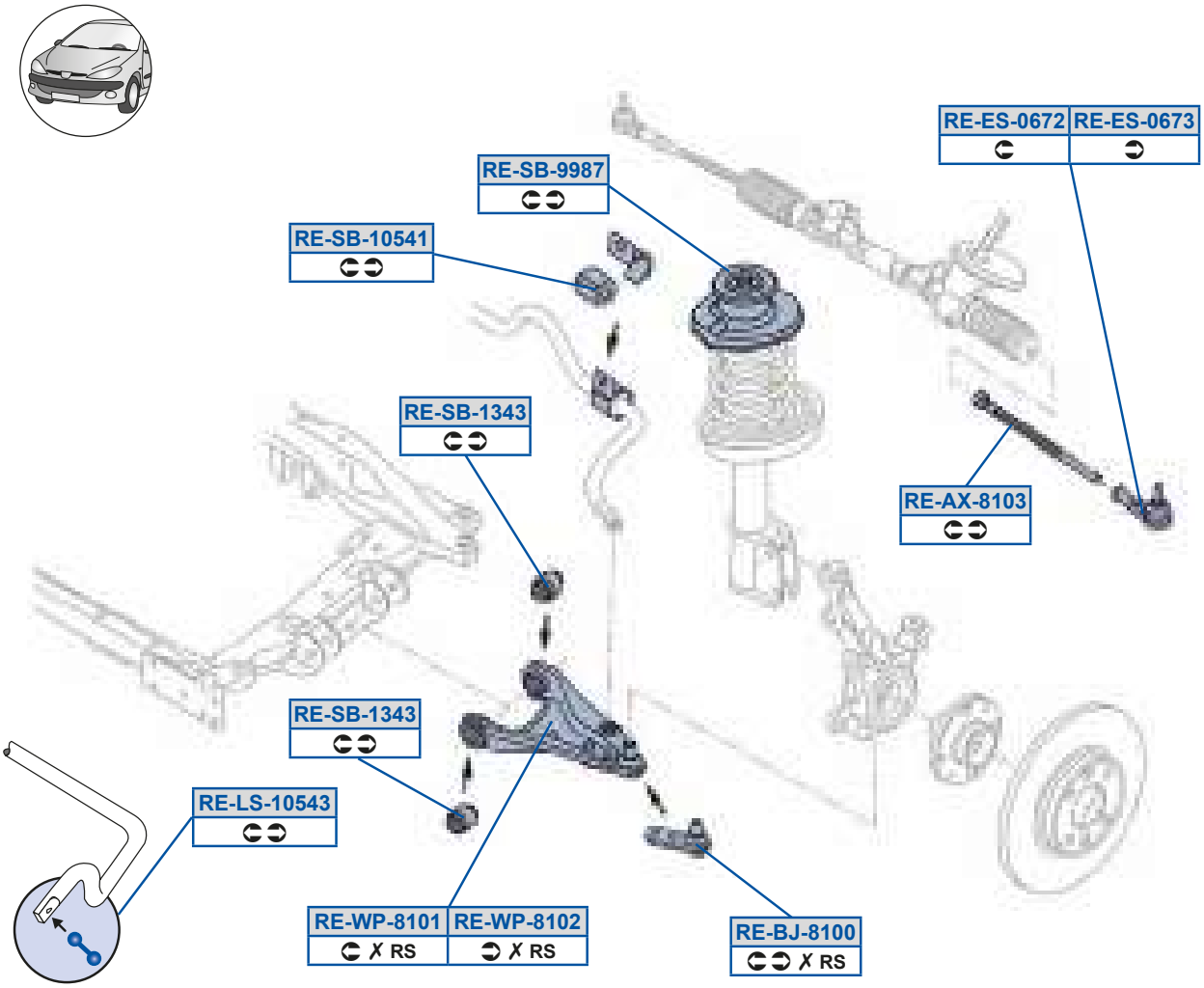
RE-ES-0672
RE-ES-0673
RE-SB-9987
RE-SB-10541
RE-SB-1343
RE-AX-8103
RE-SB-1343
RE-LS-10543
RE-WP-8101
RE-WP-8102
✗ RS
✗ RS
RE-BJ-8100
✗ RS

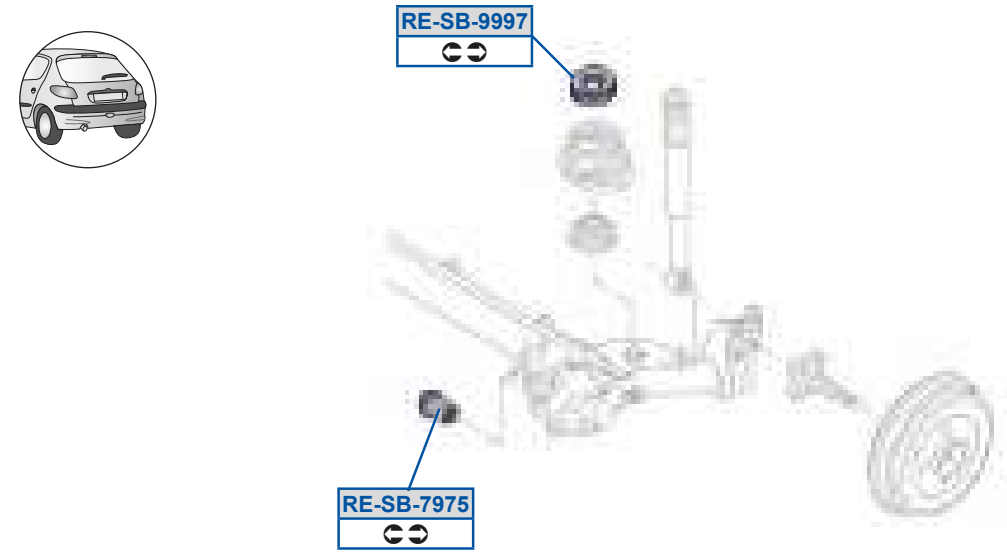
RE-SB-9997
RE-SB-7975

c S5Oi 5F98A
EE78BEEFEF

c S5dP5GGFE
EE77F9EBAC3EE77F9EBACo9

c S5PX5F988
F977EDA9G7 /40

c S5dP5GGGE
EE77FBDG8D

c S5Sd58DE>
EE787BEB8C3EE787BEF89

c S5h a5F989
F977EDA9GB3F977GB9AG9

c S5Sd58DEA
EE787BEB8D3EE787BEF8A

c S5h a5F98>
F977EDA9G73F977GB9AGD

c S5Zd598CBA
F977D7ABG93F977FG8BFE

c S5dP598CB9
F977DG8B9C

c S5dP59ABA
EE77B8G9AD3EE77B8G9BG

c S5dP5EGEC
EE77FAGA8D3F9777B9CGB

gvédr z

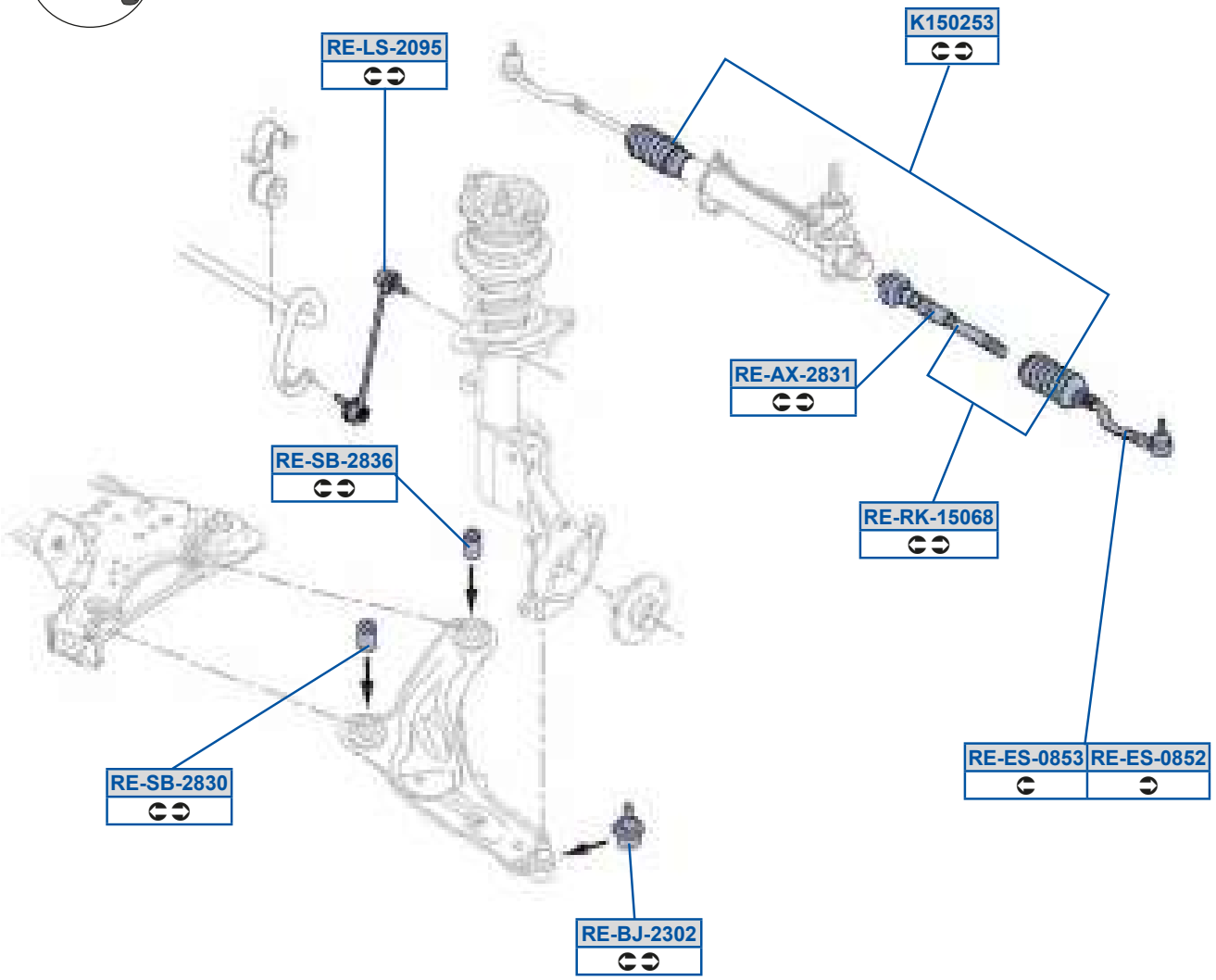

c S] Of Ze

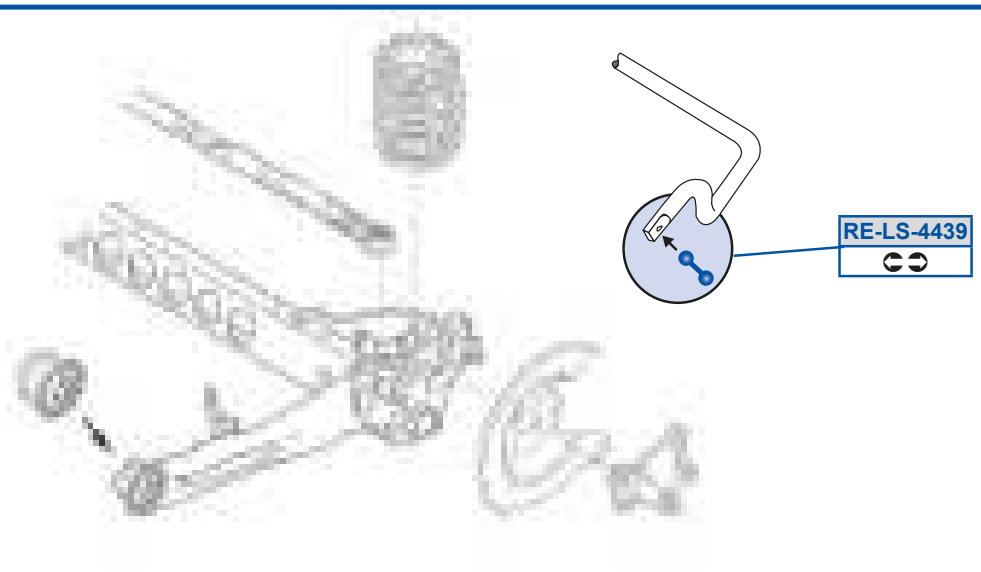

MOOG

Y9C8>CA
EE78BEB7EC

c S5dP5>FA8
F977779FDF3F977AFG8AC /40

c S5Oi 5>FA9
EE78BEB7ED3EE78BEFCC9

c S5dP5>FAD
F977AFG8AB /40

c S5PX5>A8>
B78D7DDEDn3D7B777987C

c S5Sd58FC>
BFC97GBBDn3EE787BG9FA

c S5Sd58FCA
BFC979E8Bn3EE787BG9F9

c S5Zd5>8GC
F977779FE73F977DD898E

c S5Zd5BBAG
F977778FCE3F977D8GG99

c S5c Y59C8DF
EE78BEB7ED3EE78BEFCC9

cS] Of Ze

h WR OSB[r1	8E798		

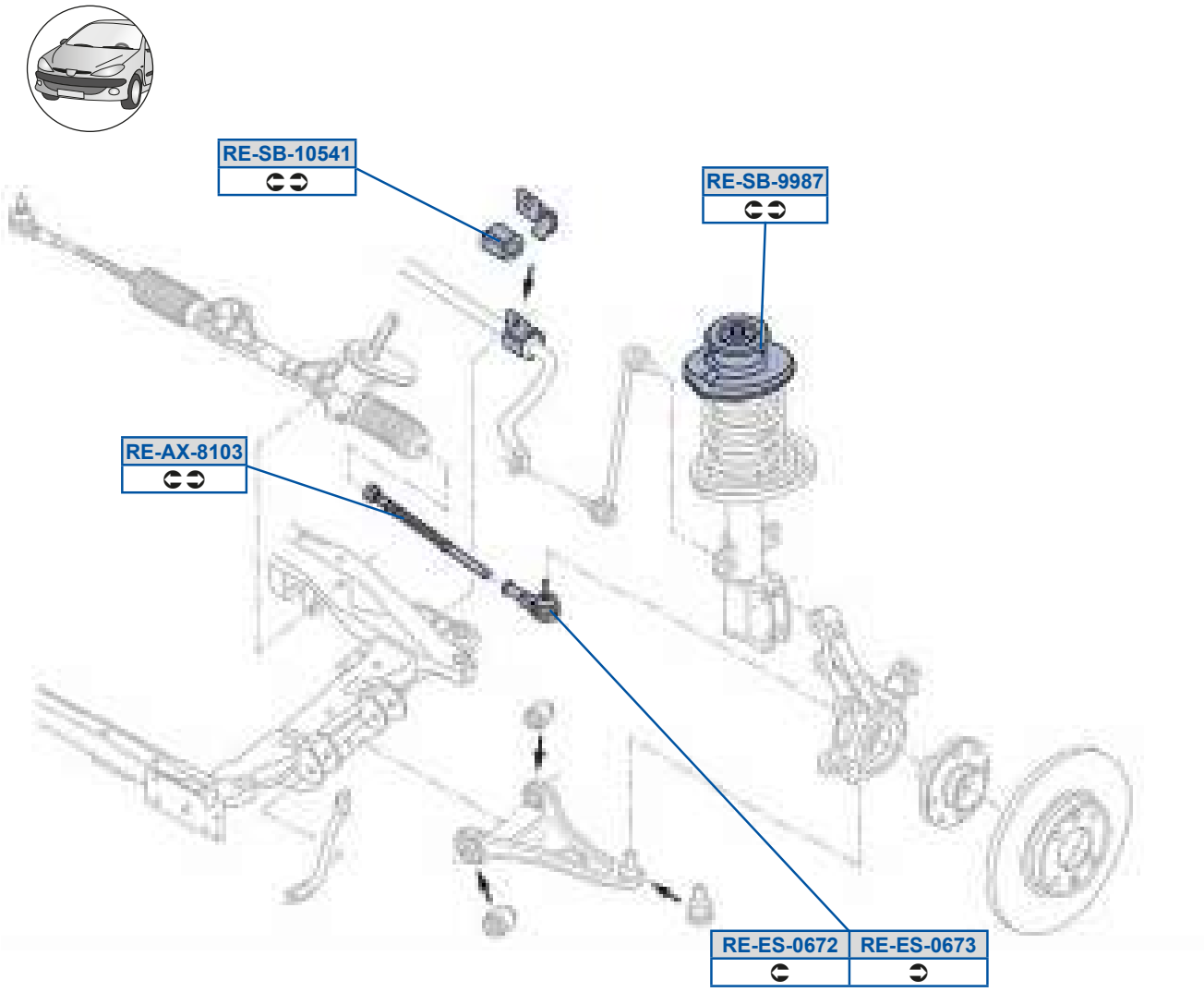

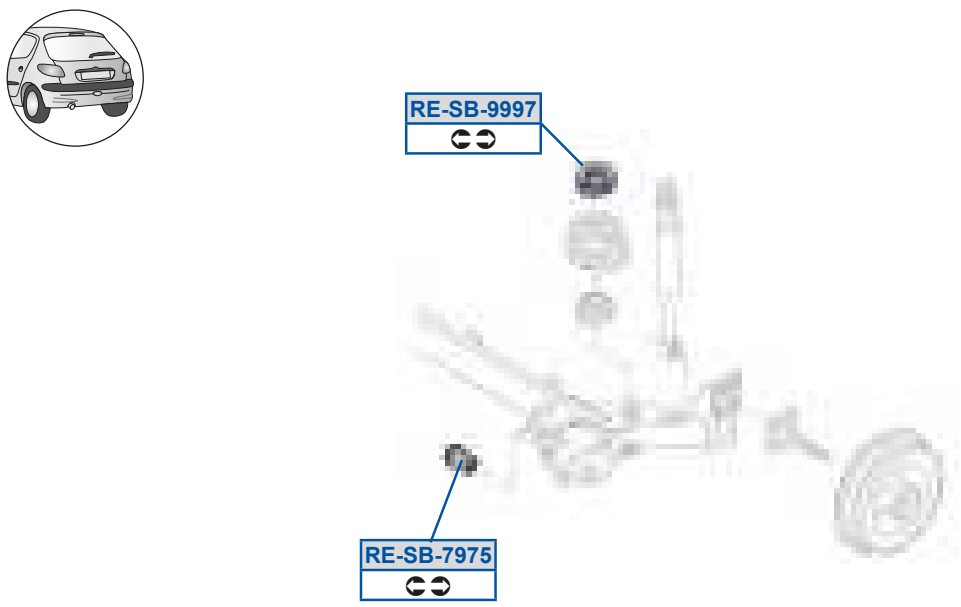

cS] Of Ze

MOOG

c S5Oi 5F98A
EE78BEEFEF

c S5Sd58DE>
EE787BEB8C3EE787BEF89

c S5Sd58DEA
EE787BEB8D3EE787BEF8A

c S5dP598CB9
F977DG8B9C

c S5dP5EGEC
EE77FAGA8D3F9777B9CGB

c S5dP5GGFE
EE77F9EBAC3EE77F9EBACo9

c S5dP5GGGE
EE77FBDG8D

I _S	8D79;		

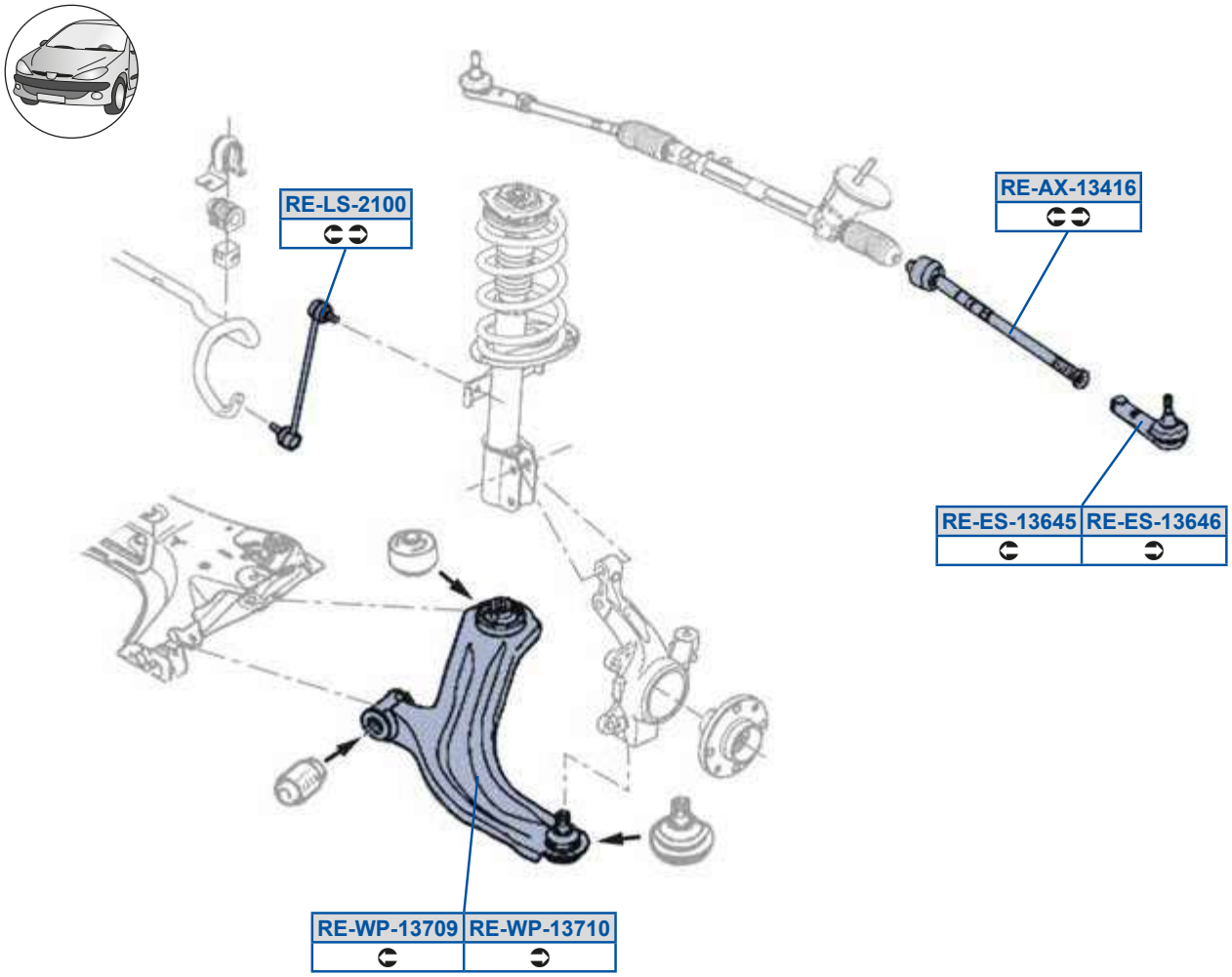
RE-LS-2100
RE-AX-13416
RE-ES-13645
RE-ES-13646
RE-WP-13709
RE-WP-13710

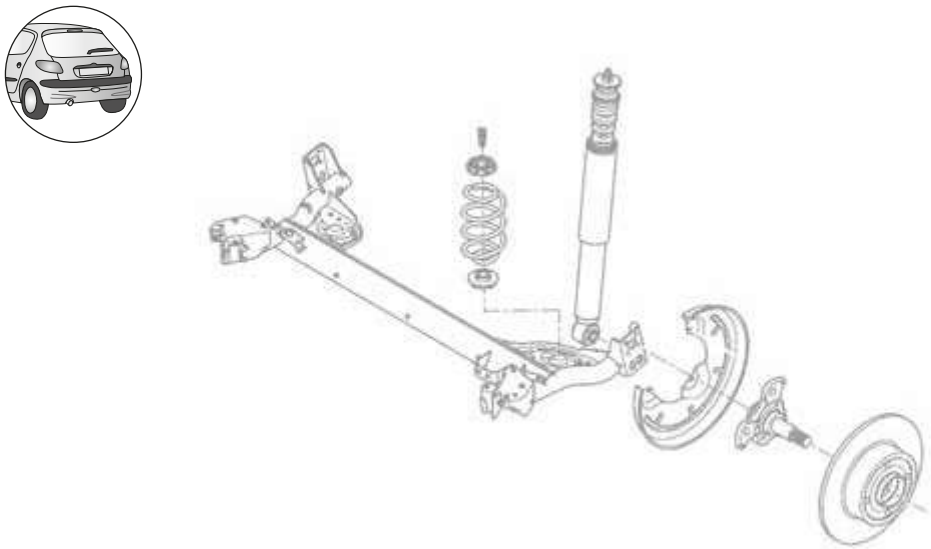

MOOG

c S5Oi 59AB9D
BFC9887E8n3BFC988AECn

c S5Sd59ADBC
BFC977ADFn

c S5Sd59ADBD
BFC97FACCn

c S5Zd5>988
CC887EG8Dn3F97789EA7F

c S5h a59AE8G
CBC7C7C87n3CBC7CCE88n

c S5h a59AE98
CBC7BDF8En3CBC7BFC7Dn

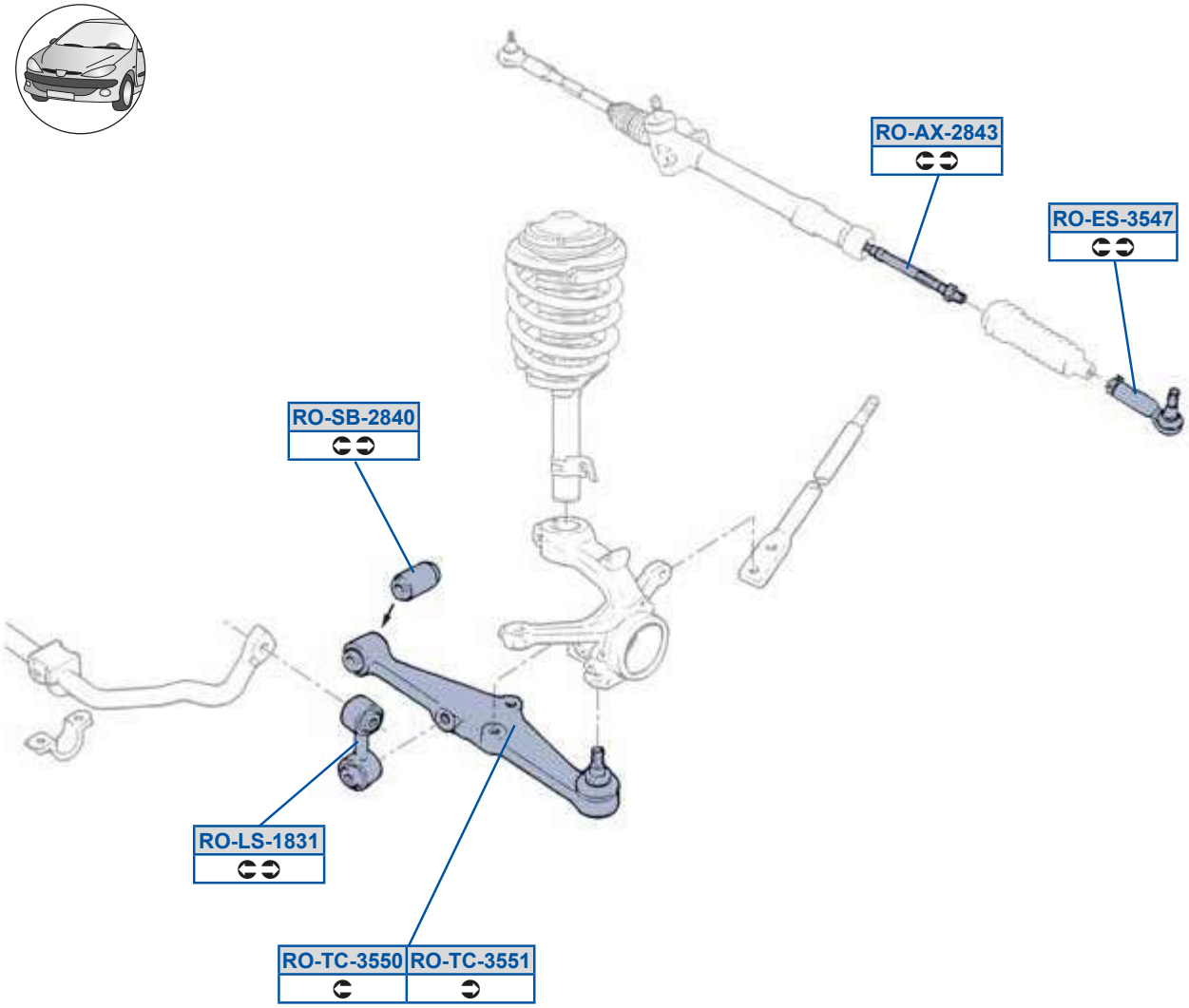
RO-AX-2843
RO-ES-3547
RO-SB-2840
RO-LS-1831
RO-TC-3550
RO-TC-3551

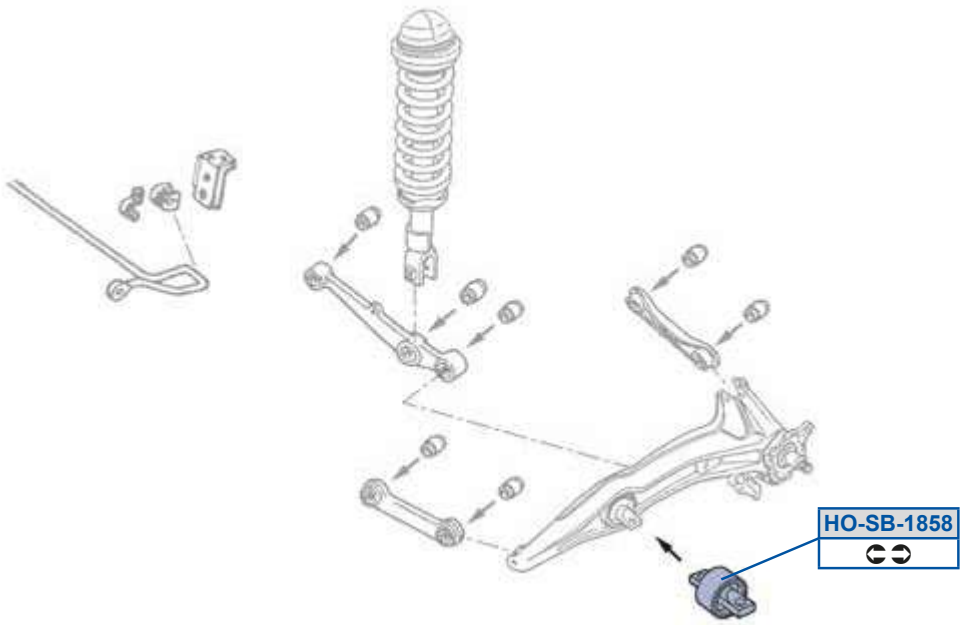
HO-SB-1858

MOOG

V_5dP59FCF
nU 8777E3nU 877GF7

c_5Oi 5>FBA
Uo 88E7

c_5Sd5ACBE
UoX87883UoX9FF

c_5Zd59FA9
SUi 8DD9

c_5dP5>FB8
SUi 8DEA

c_5eQ5ACC8
UoX9FD3UoXB8A

c_5eQ5ACC9
UoX9FE3UoXB8B

c _ gSc

BC 0ce1	8; 788 8C78C	BC dt 0ce1	8; 788 8C78C

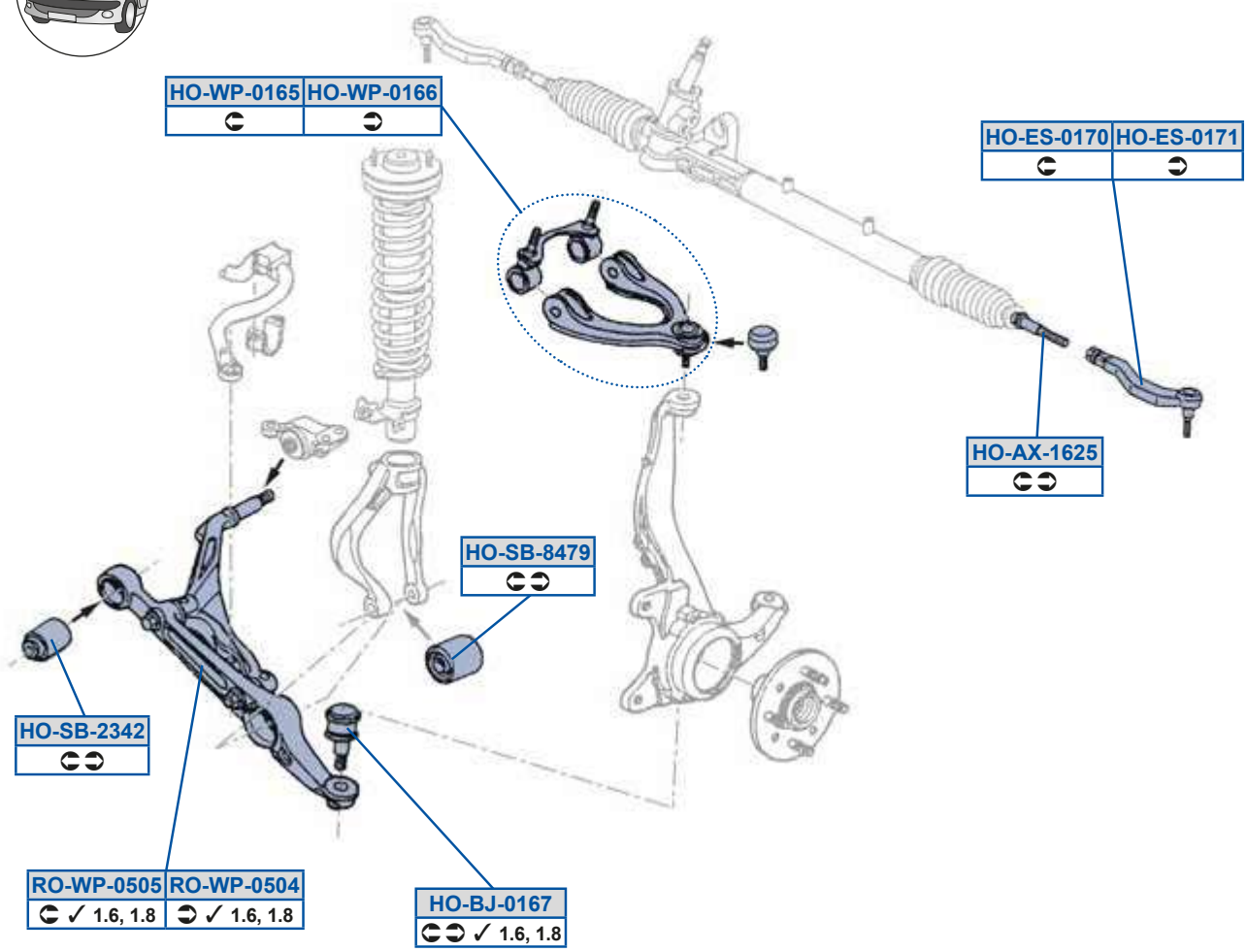

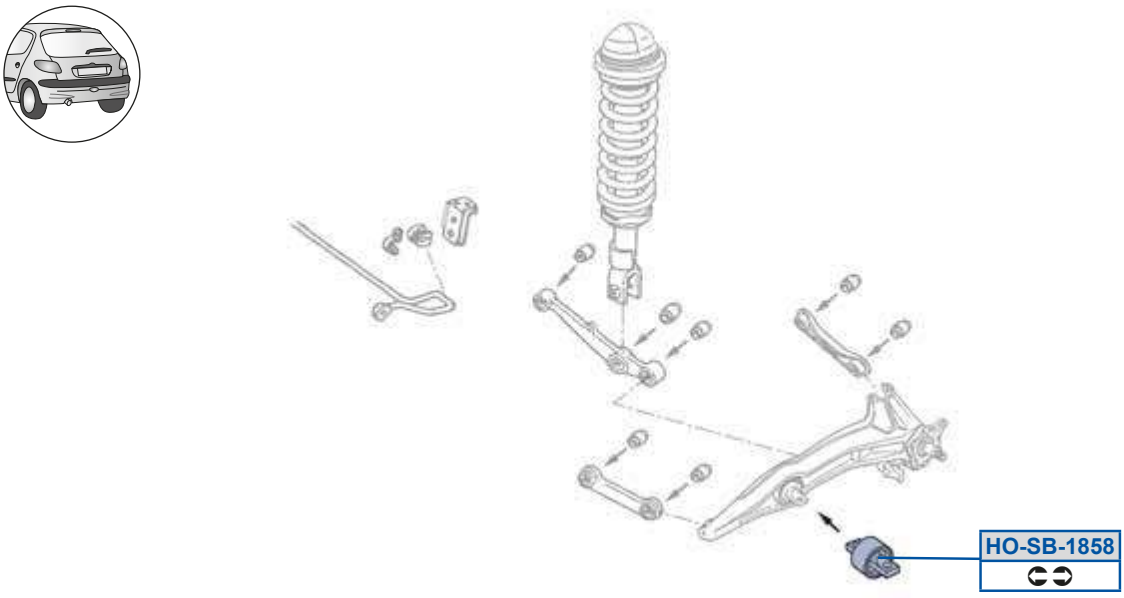

V_ 5Oi 59D>C
CA787onA7873CA787ot 7777

V_ 5h a589DD
UoXBFD3nPX879897

V_ 5PX589DE
UoXBGG

c_ 5h a58C8B
UoXFAC3nPX879997

V_ 5Sd589E8
UoXBGC3l U 8777C7

c_ 5h a58C8C
UoXFAD3nPX879997

V_ 5Sd589E9
UoXBGD3l U 8777D7

V_ 5dP59FCF
nU 8777E3nU 877GF7

V_ 5dP5>AB>
C8AG9onA79B3nP 877DE7

V_ 5dP5FBEG
nP 877DF7

V_ 5h a589DC
UoXBFC3nPX879897

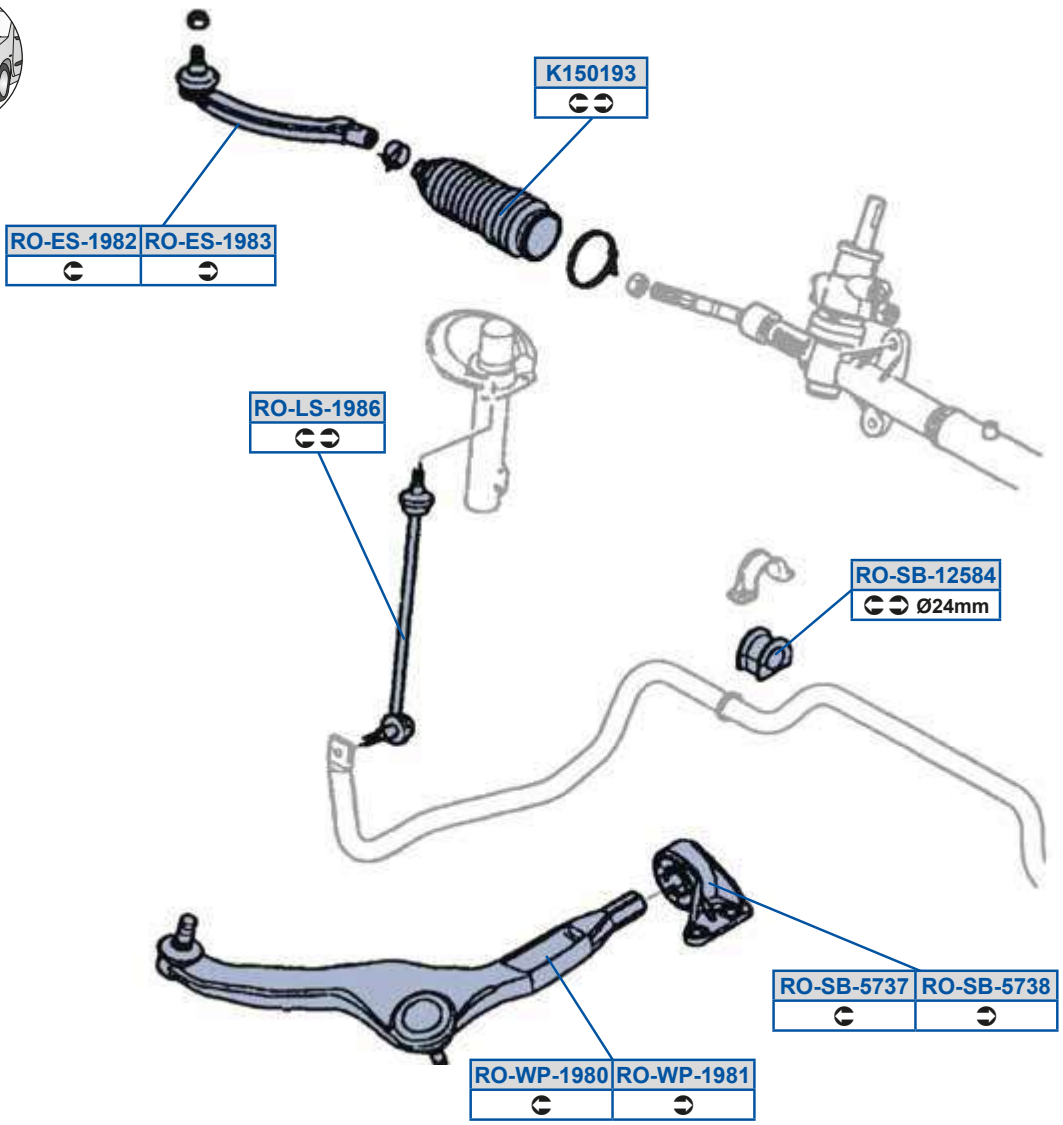

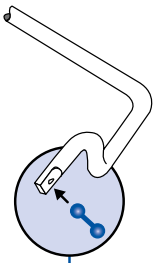

RO-LS-1984	RO-LS-1985

RO-SB-12585

Y9C89GA
UnU88CE

c_5dP5CEAE
UoX8778 /40

c_5Sd59GF>
UoXFEE3I XP8778G7

c_5dP5CEAF
UoX8777 /40

c_5Sd59GFA
UoXFEF3I XP8778F7

c_5h a59GF8
UoX87783nPX879C87

c_5Zd59GFB
nUR877CE83nUR877CE9

c_5h a59GF9
UoX87773UoX8779

c_5Zd59GFC
nUR877CD83nUR877CD9

c_5Zd59GFD
nPa 8779B7

c_5dP59>CFB
nP 878A87

c_5dP59>CFC
nU 8787G7

988 0[Sec_1 0 a1	997FG 9; 7GF	988 Q x éu x 0 a1	8B7GB 9; 7GF

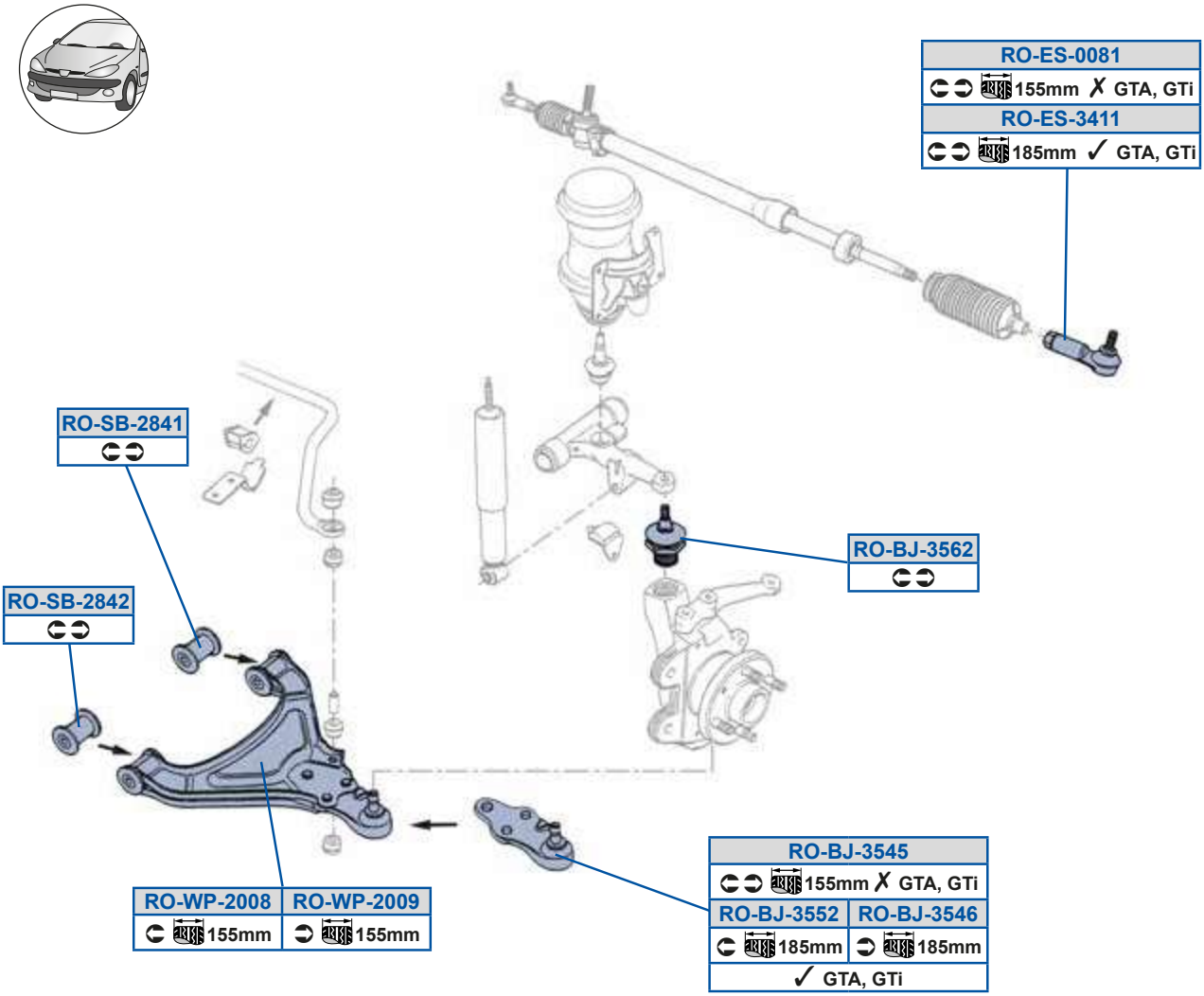

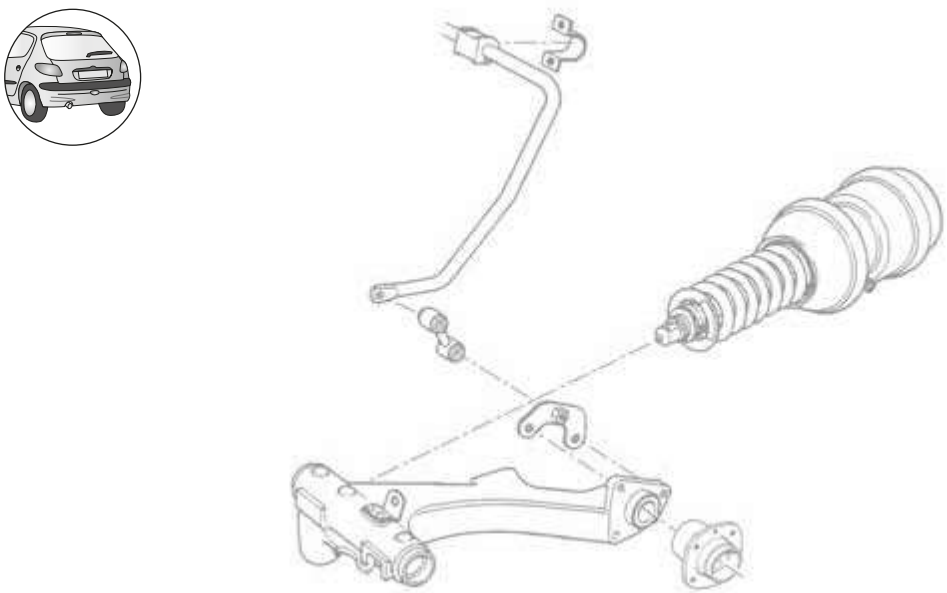

c_5PX5ACBC
UoXE9G

c_5PX5ACBD
UoXEA7

c_5PX5ACC>
UoXEA8

c_5PX5ACD>
UoX9CE3UoX9DG

c_5Sd588F9
8EnVABFE3979D9C77

c_5Sd5AB99
UoXEA9

c_5dP5>FB9
nP 8779D

c_5dP5>FB>
nP 8779C

c_5h a5>88F
UoXB8C

c_5h a5>88G
UoXB8D

c_ gSc

; 88 Q x éu x Ơi h 1	897GA	997GG	; 88 Q x Ơi h 1	987G;	8D7GG
; 88 Vt vÉut v 0cT1	997GC	8A788	; 88 Vt vÉut v Ơi h 1	987FG	987GC
QOPcW̲ZSe Ơi h 1	8B7G8	997GG			

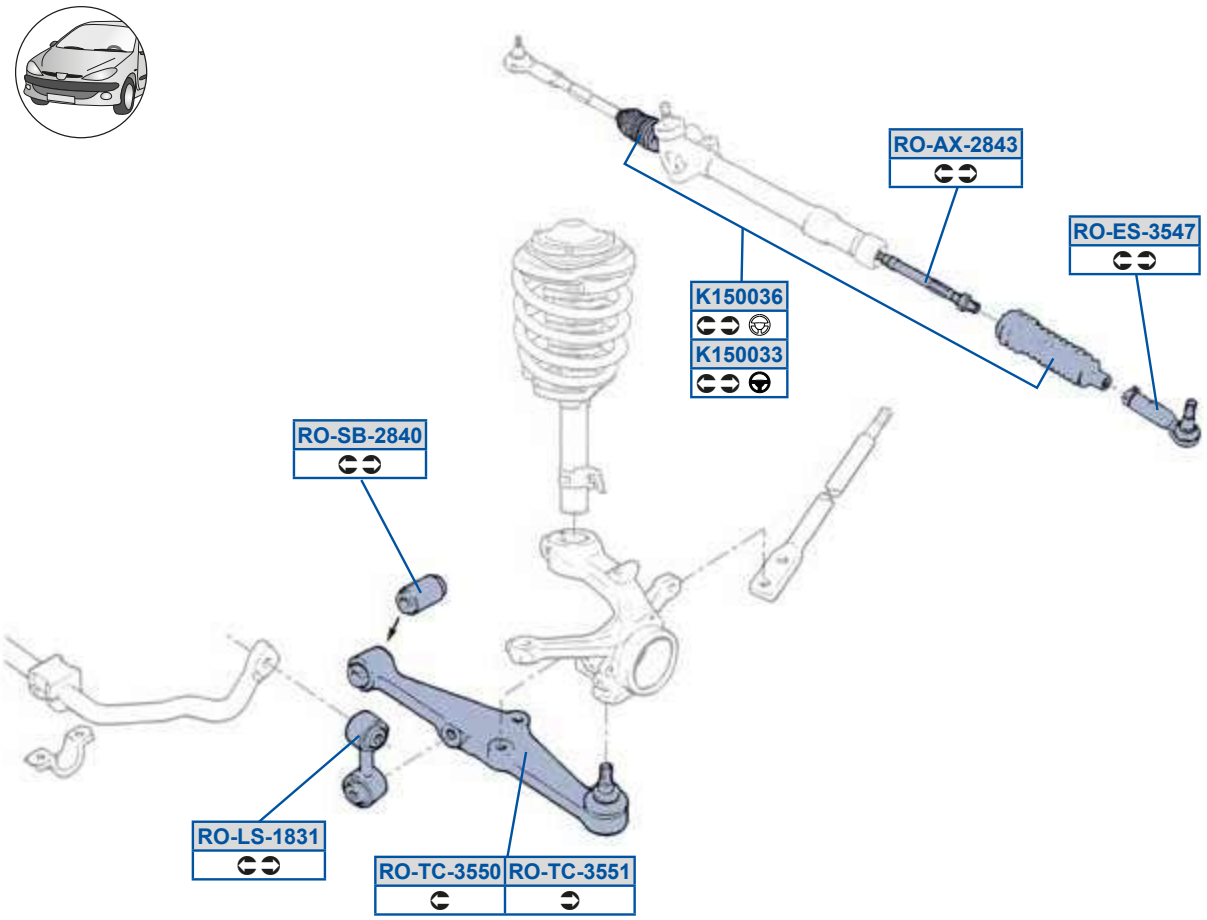

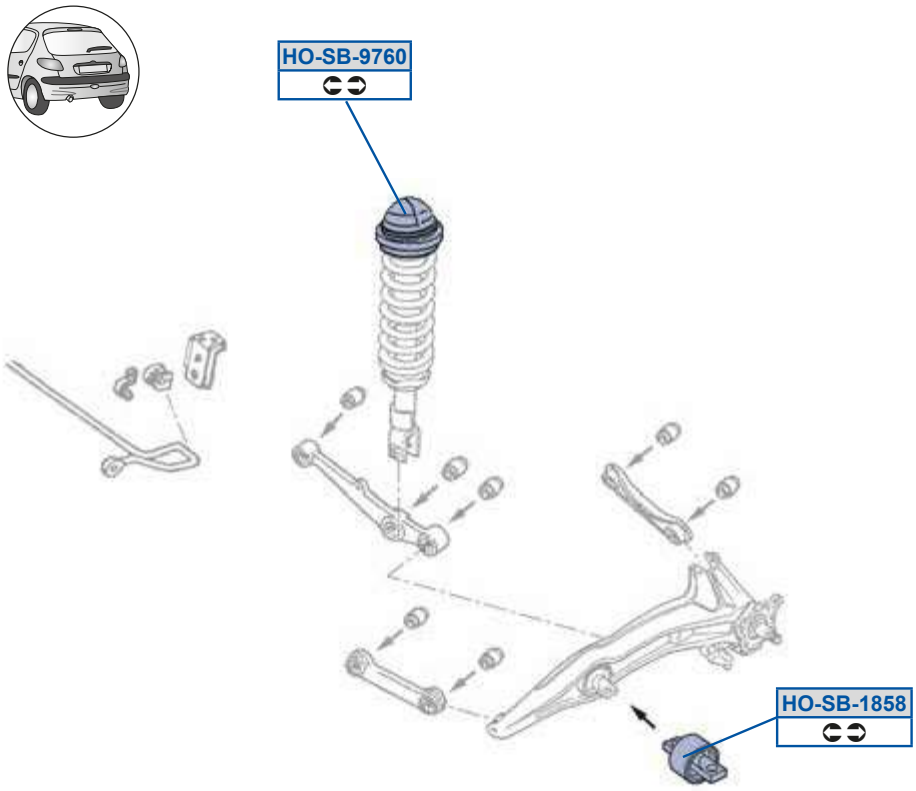

MOOG

V_5dP59FCF
nU 8777E3nU 877GF7

V_5dP5GED8
C9D98DAB7773C9D98oP977B

Y9C88AA
UnU88C9

Y9C88AD
Uo 88B8

c_5Oi 5>FBA
Uo 88E7

c_5Sd5ACBE
UoX87883UoX9FF

c_5Zd59FA9
SUi 8DD9

c_5dP5>FB8
SUi 8DEA

c_5eQ5ACC8
UoX9FD3UoXB8A

c_5eQ5ACC9
UoX9FE3UoXB8B

c _ gSc

B88 0i h 1	8B7G8 8B7GC	B88 e x 0i h 1	8G7GA 997GF

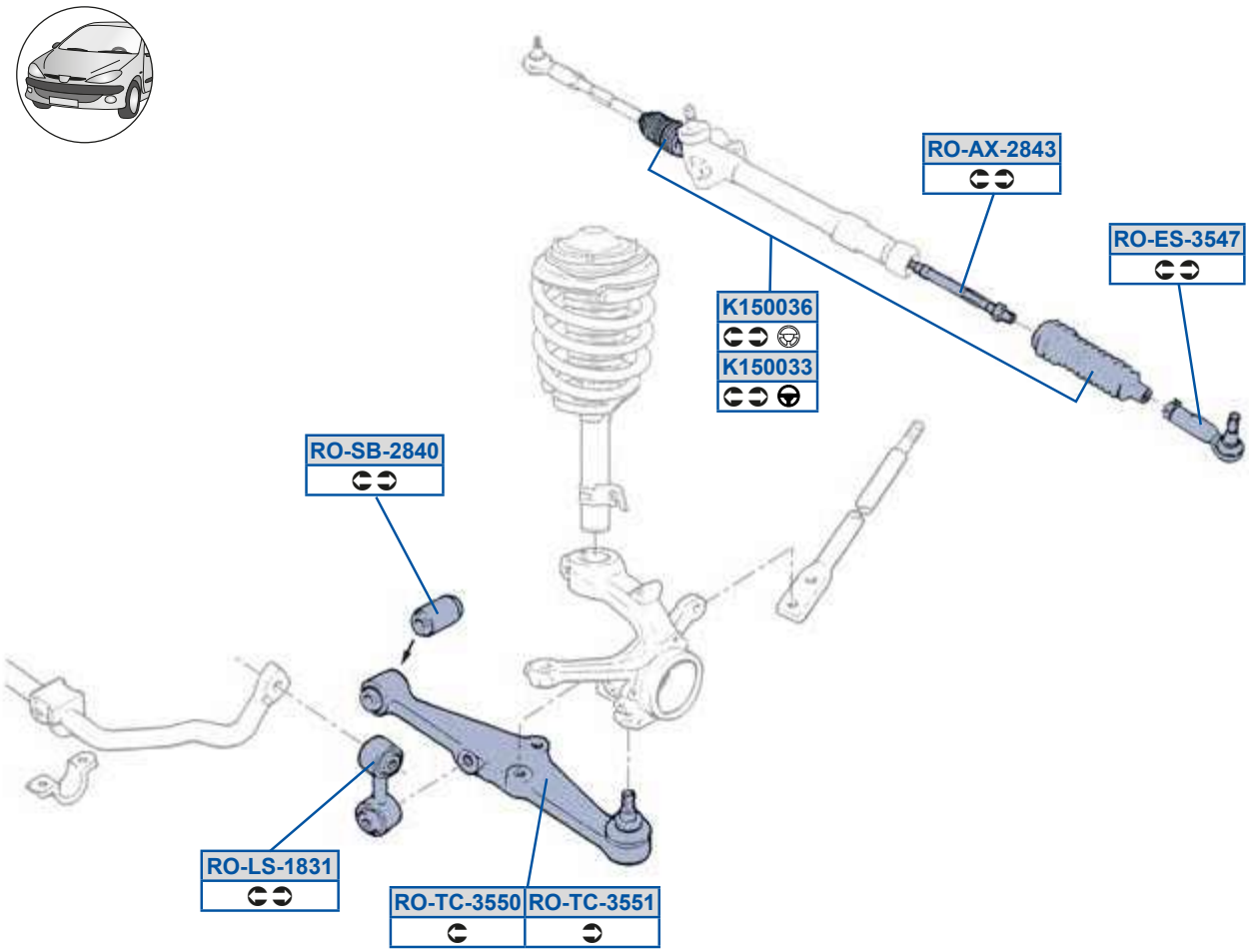

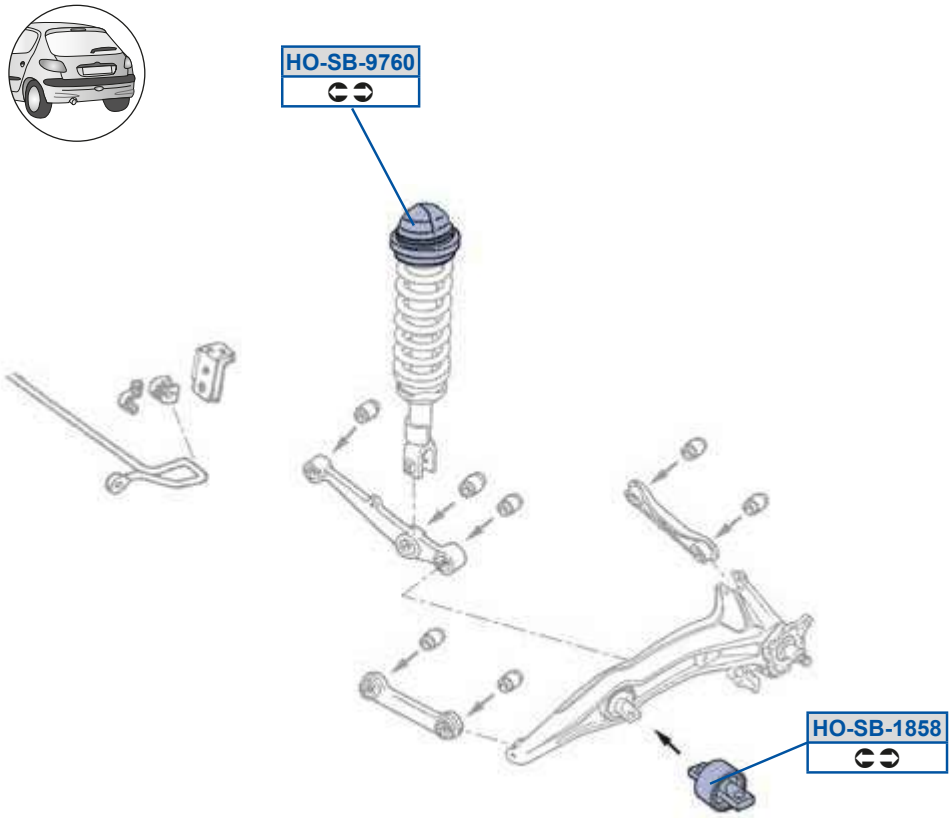

V_5dP59FCF
nU 8777E3nU 877GF7

V_5dP5GED8
C9D98DAB7773C9D98oP977B

Y9C88AA
UnU88C9

c_5Oi 5>FBA
Uo 88E7

c_5Sd5ACBE
UoX87883UoX9FF

c_5Zd59FA9
SUi 8DD9

c_5dP5>FB8
SUi 8DEA

c_5eQ5ACC8
UoX9FD3UoXB8A

c_5eQ5ACC9
UoX9FE3UoXB8B

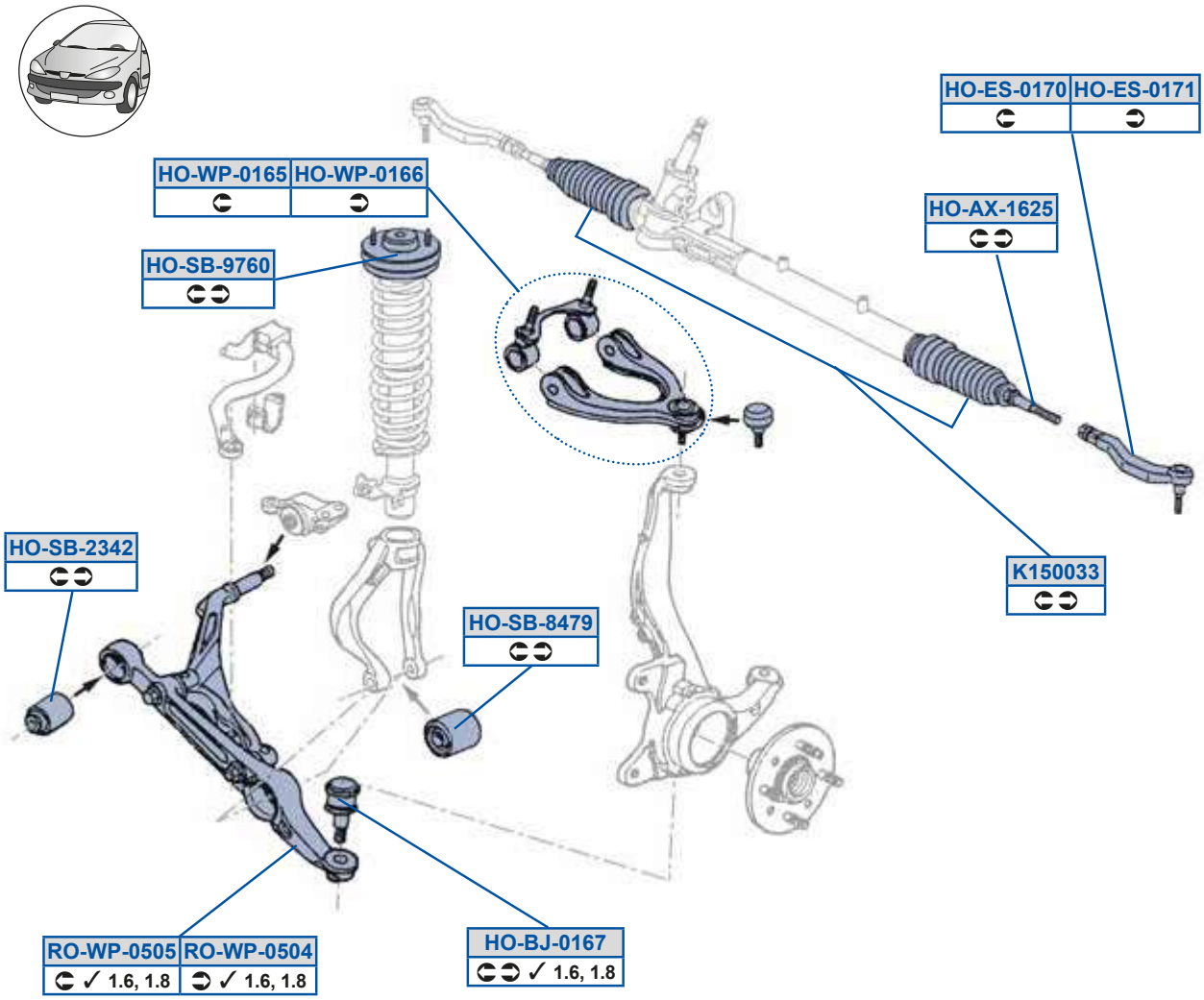
HO-ES-0170
HO-ES-0171
HO-WP-0165
HO-WP-0166
HO-AX-1625
HO-SB-9760
HO-SB-2342
K150033
HO-SB-8479
RO-WP-0505
RO-WP-0504
✓ 1.6, 1.8
✓ 1.6, 1.8
HO-BJ-0167
✓ 1.6, 1.8

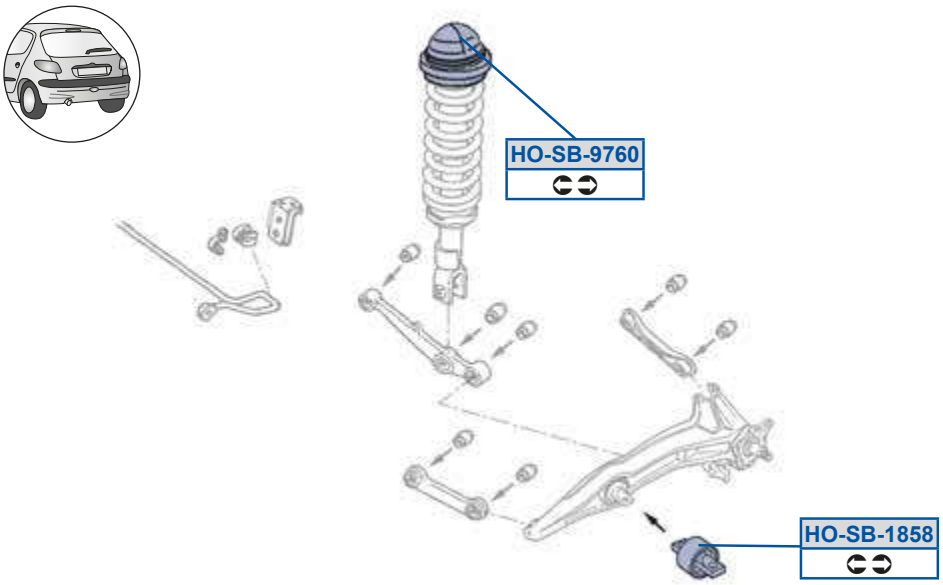
HO-SB-9760
HO-SB-1858

V_5Oi59D>C
CA787onA7873CA787ot7777

V_5PX589DE
UoXBGG

V_5Sd589E8
UoXBGC3I U 8777C7

V_5Sd589E9
UoXBGD3I U 8777D7

V_5dP59FCF
nU 8777E3nU 877GF7

V_5dP5>AB>
C8AG9onA79B3nP 877DE7

V_5dP5FBEG
nP 877DF7

V_5dP5GED8
C9D98DAB7773C9D98oP977B

V_5ha589DC
UoXBFC3nPX879897

V_5ha589DD
UoXBFD3nPX879897

Y9C88AA
UnU88C9

c_5ha58C8B
UoXFAC3nPX879997

c_5ha58C8C
UoXFAD3nPX879997

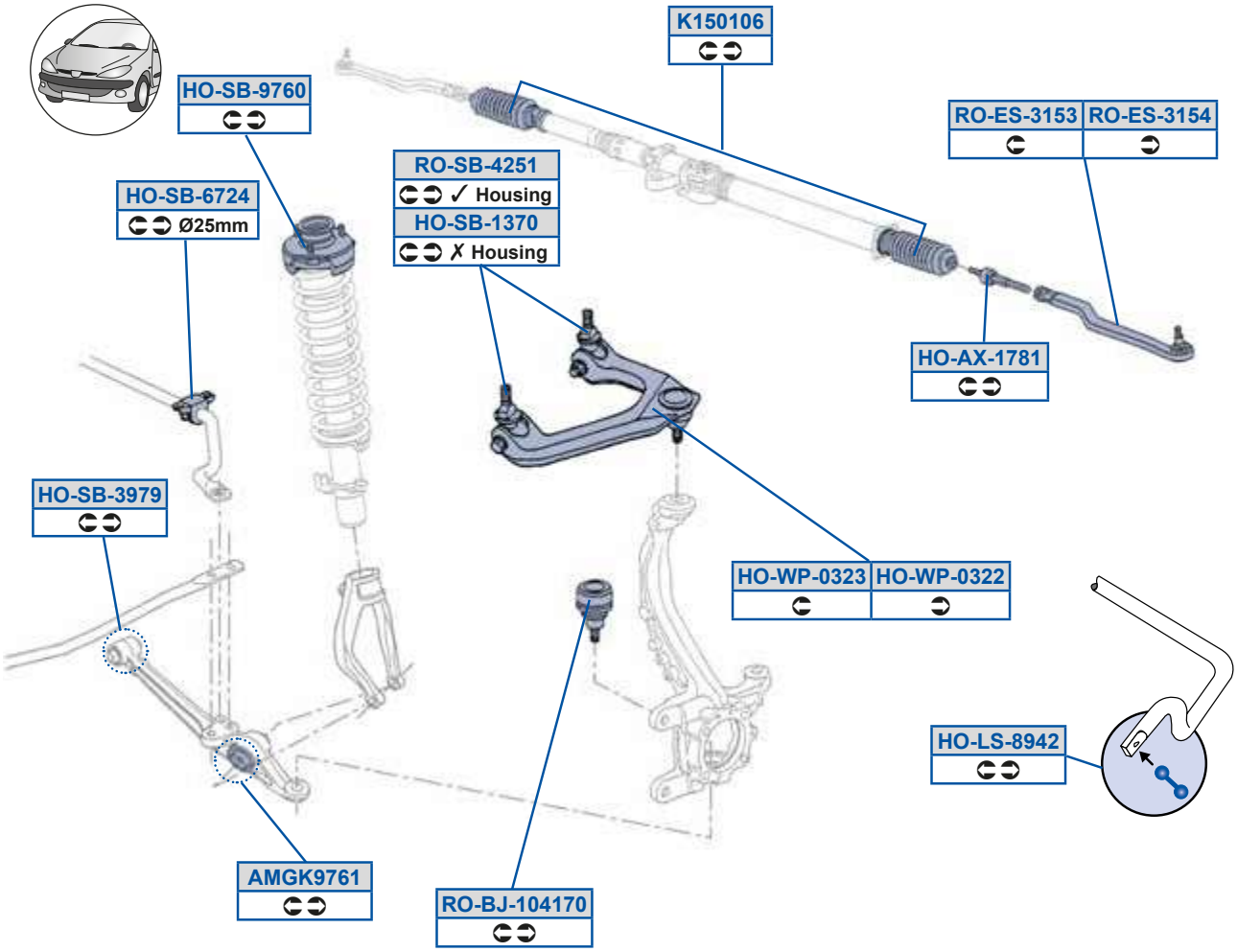
K150106
HO-SB-9760
RO-ES-3153
RO-ES-3154
RO-SB-4251
✓ Housing
HO-SB-1370
✗ Housing
HO-SB-6724
Ø25mm
HO-AX-1781
HO-SB-3979
HO-WP-0323
HO-WP-0322
HO-LS-8942
AMGK9761
RO-BJ-104170

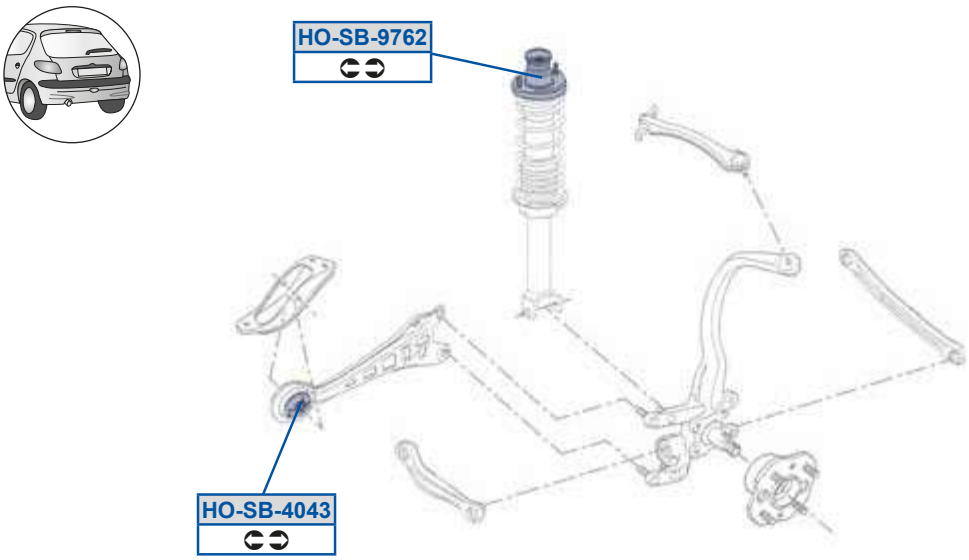
HO-SB-9762
HO-SB-4043

O[UYGED9
C8F87oa B77B

V_ 5dP5GED>
C8D98oFB0783C8DFCon777B

V_ 5Oi 59EF9
CAC98oa B77A3CAC98oa B78A

V_ 5h a58A>>
UoXB9B3nPX877DG7

V_ 5Zd5FGB>
G7889oa B797

V_ 5h a58A>A
UoXB9A

V_ 5dP59AE8
C8BC7ot AS793C8BCConA77A

Y9C898D
UnU8C7

V_ 5dP5AGEG
nP 877BA8

c_ 5PX598B9E8
UoXB7B

V_ 5dP5B8BA
C9AE7onAX77

c_ 5Sd5A9CA
UoXB7E

V_ 5dP5DE>B
nP 877AF7

c_ 5Sd5A9CB
UoXB7F

V_ 5dP5GED8
C9D98DAB7773C9D98oP977B

c_ 5dP5B>C9
C8BC7o B077 /40

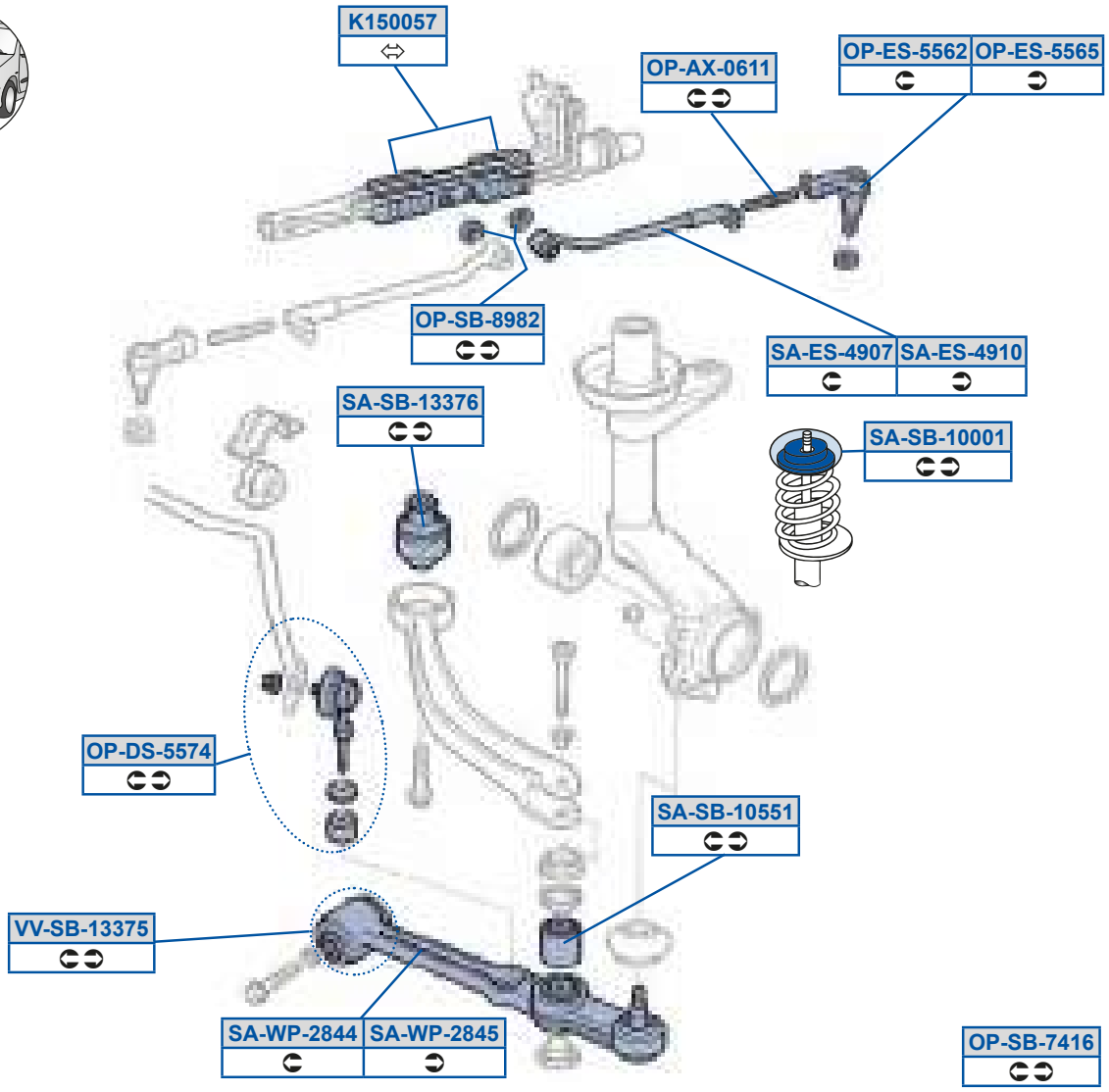
K150057
OP-AX-0611
OP-ES-5562
OP-ES-5565
OP-SB-8982
SA-ES-4907
SA-ES-4910
SA-SB-13376
SA-SB-10001
OP-DS-5574
SA-SB-10551
VV-SB-13375
SA-WP-2844
SA-WP-2845
OP-SB-7416

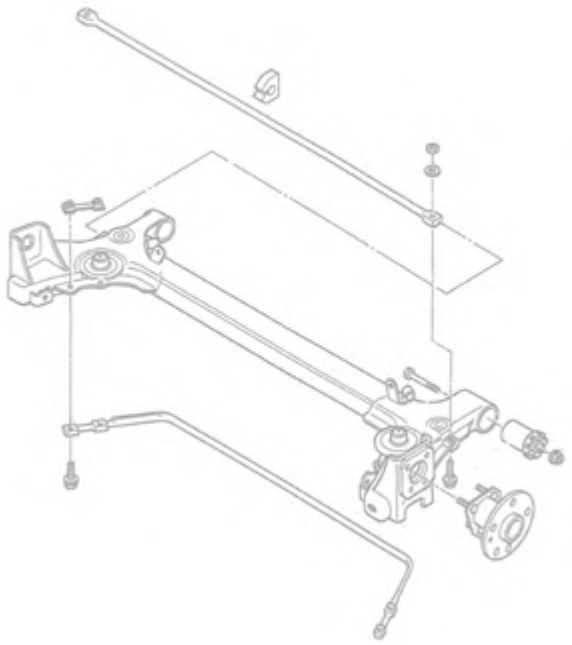

Y9C88CE
A7CCE87G3BB79EE9

dO5Sd5BG98
A997F73B9B9DF8

_ a5Oi 58D99
B9B9EA8

dO5dP598889
B9BDAEE3BG7FCD9

_ a5Rd5CCEB
BCBBCGG

dO5dP598CC9
BCBCE88

_ a5Sd5CCD>
A9B7CA3B9B9EBG

dO5dP59AAED
BBF9B79

_ a5Sd5CCDC
A9B7CB3B9B9ECD

dO5h a5>FBB
BCBABC7

_ a5dP5EB9D
ACABD7

dO5h a5>FBC
BCBABDF

_ a5dP5FGF>
A998BE /403B9B9DEA /40

gg5dP59AAEC
BCBABC7 /403BCBABDF /40

dO5Sd5BG8E
A997EG3B9B9DEA

G5A 0kdAT1	8G78; 8; 79C	G5A Q x áu x 0kdAT1	8F78A 8; 79C
G5A S t x	8A78C 8; 79C		

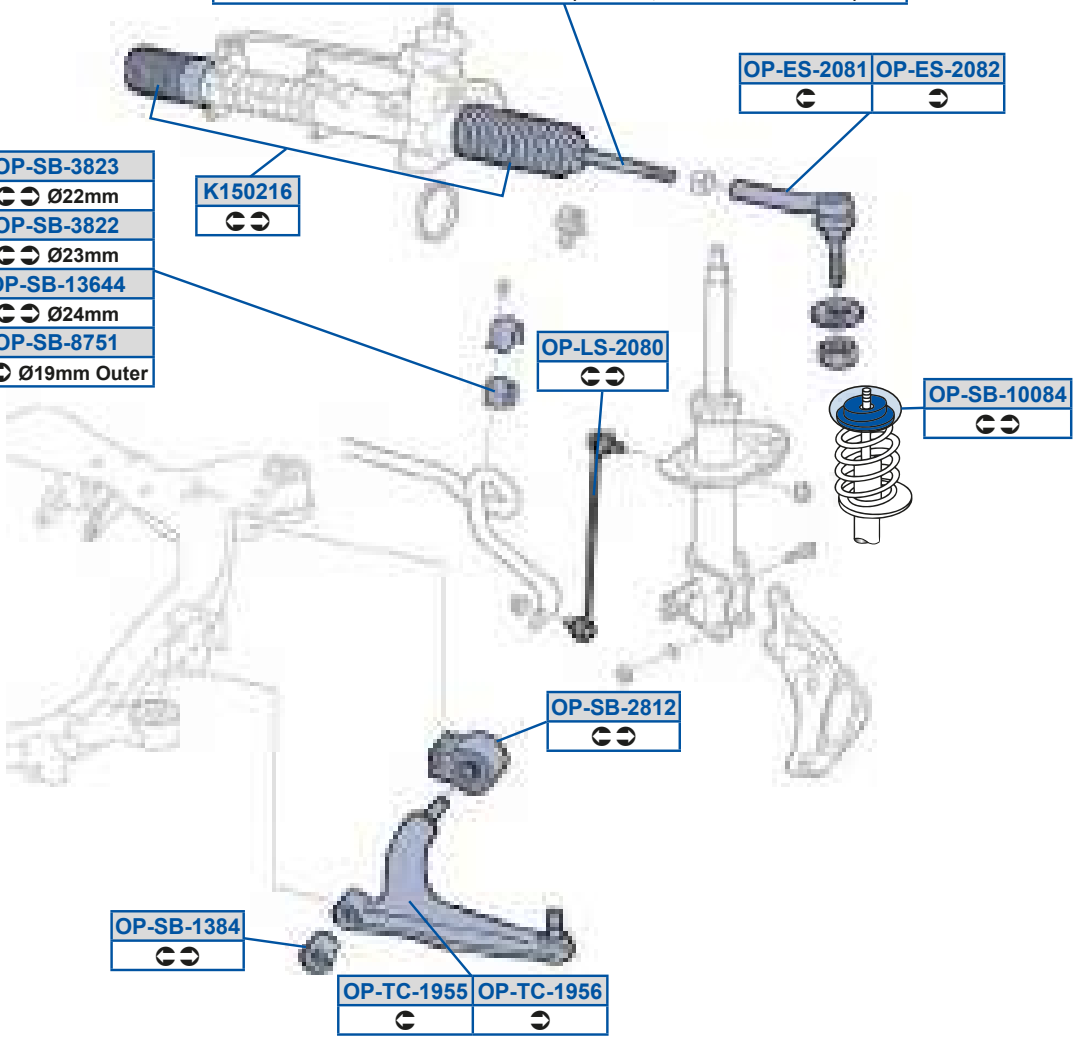

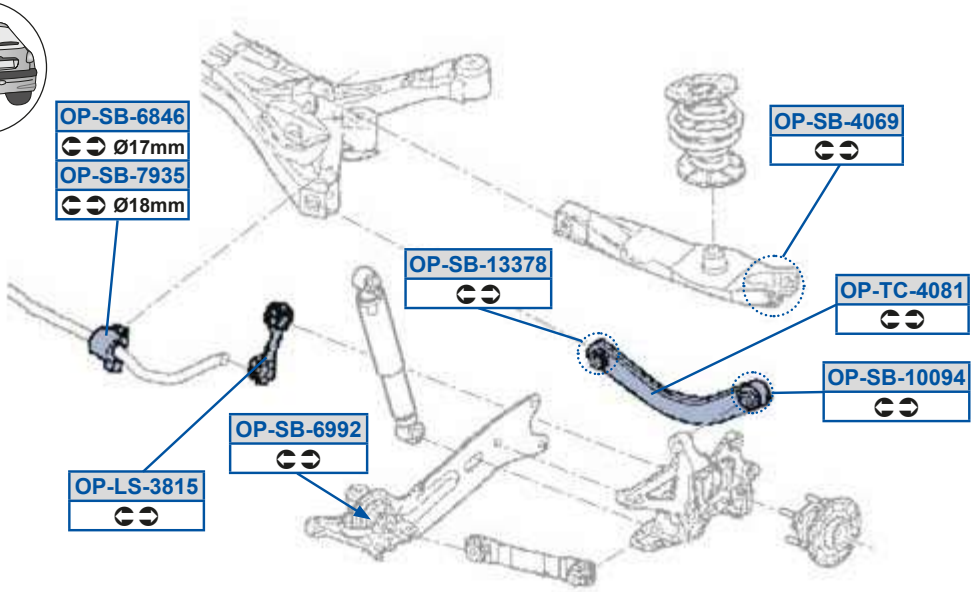

Y9C8>9D
89F797BA

_ a5dP59AAEF
8A87CEBB /40B8A97B88C /40

_ a5dP5DGG>
89ECDAGC389EGC79B

_ a5OiI 5CDFG

_ a5dP59ADBB
8A97B7E8

_ a5dP5EGAC
9BBCEAFD

_ a5Sd5>8F9
89EDCFGD389EFEF98

_ a5dP59AFB
BCDDFGG

_ a5dP5FEC9
9BBCEFBA

_ a5Sd5>8F>
89EF8F8A389EFEF99

_ a5dP5>F9>
89EFDB89

_ a5eQ59GCC
89EGD78A389EGG8GG

_ a5Zd5>8F8
8A9AE8A739BB8E9C8

_ a5dP5AF>>
8A 8A8 9A9

_ a5eQ59GCD
89EGD78B389EGG977

_ a5Zd5AF9C
8A87B8973BCDCFCG

_ a5dP5AF>A
AC78BD

_ a5eQ5B8F9
8A87CEBB38A9A79EB

_ a5dP5988FB
8A8FFEDA

_ a5dP5B8DG
9BBDGDBA

dO5OiI 5EECB
8D7A9BB3GA8ECC97

_ a5dP5988GB
9BBABFGB

_ a5dP5DFBD
9BBCEAFC

G5C 0kdAS1	8G7GE 9; 78G	G5C S t x 0kdAS1	987GF 9; 78G

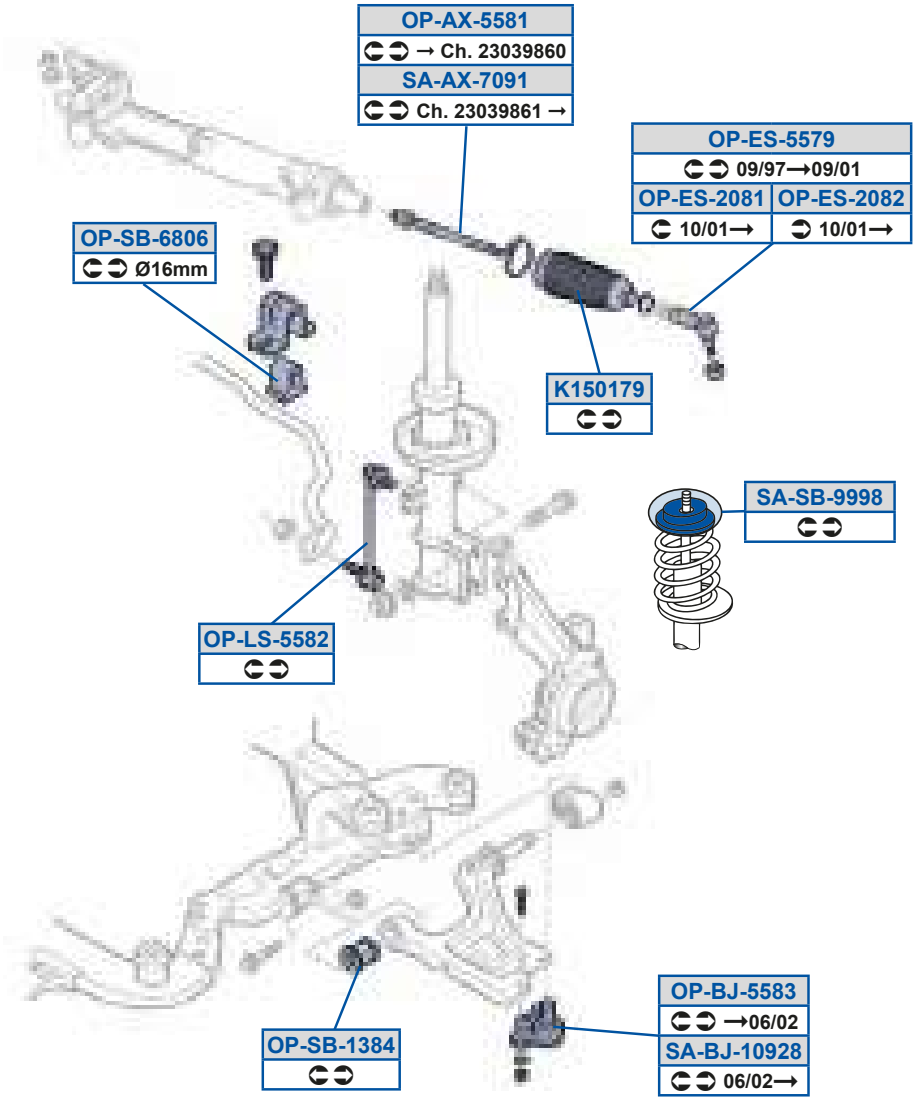

MOOG

Y9C89EG
BG7CDDE3BG7CFDC

_ a5dP5DF8D
AC78A7

_ a5Oi 5CCF9
BFADCCE

dO5Oi 5E8G9
C9ACCFC3C9AGAA7

_ a5PX5CCFA
BFACEB73C9A8DFA

dO5PX598G>F
C9AEC8D

_ a5Sd5>8F9
89EDCFGD389EFEF98

dO5dP5GGGF
B9BDAEE3BG7GE78

_ a5Sd5>8F>
89EF8F8A389EFEF99

_ a5Sd5CCEG
BFADCB73BG7CGBG

_ a5Zd5CCF>
BDFDD7D3C9ADF9A

_ a5dP59AFB
BCDDFGG

dOOP

G88 WW	8E7GA 8; 7GF	G88 WWQ x áu x	9; 7GA 8; 7GF
G88 WWQ x	9; 7GA 8; 7GF		

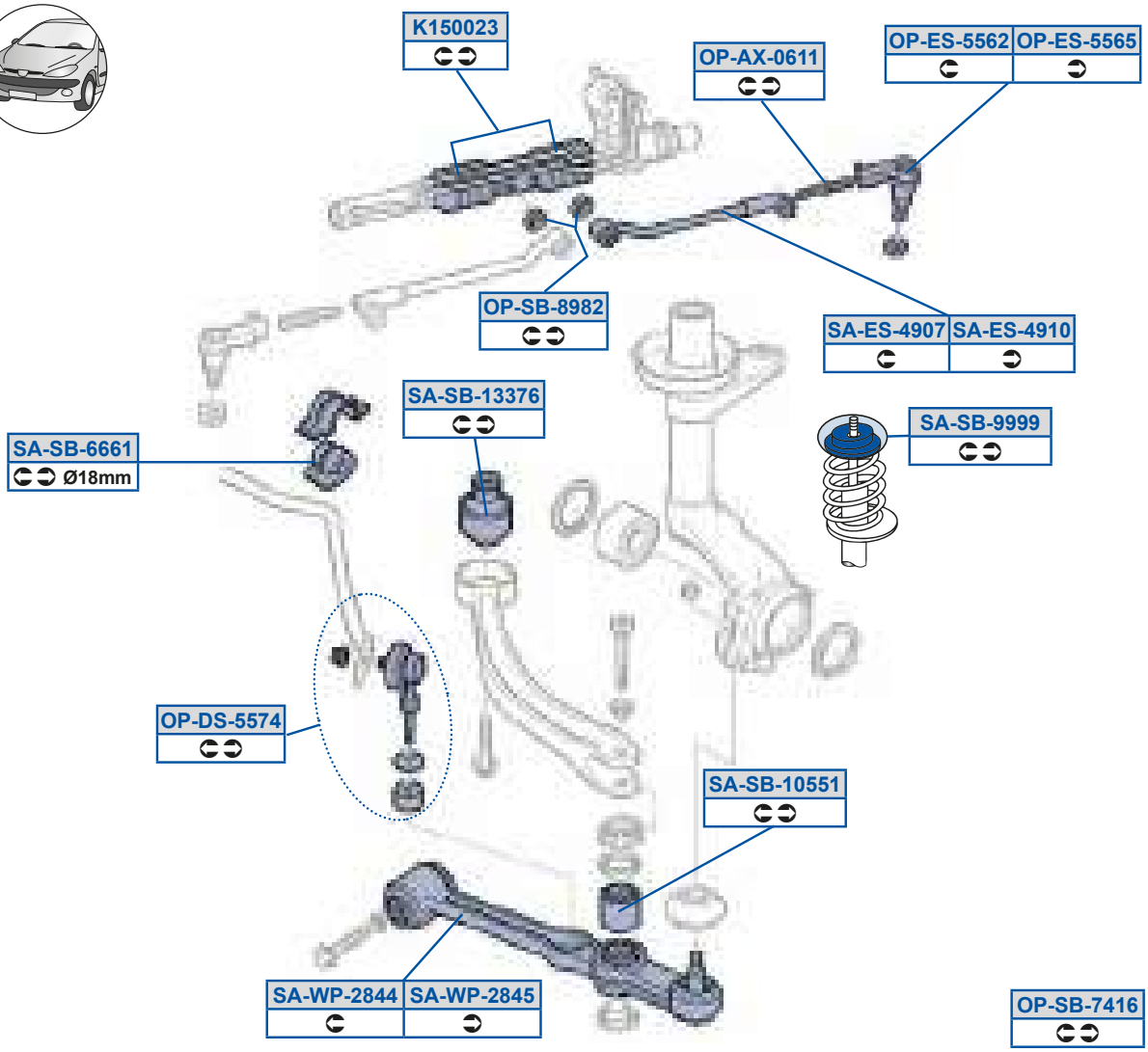

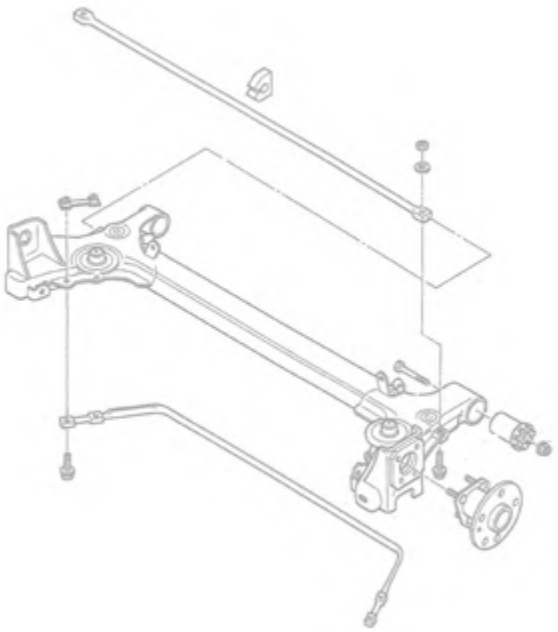

MOOG

Y9C88>A
8FGGA7GG3EF9GFD8

dO5Sd5BG98
A997F73B9B9DF8

_ a5Oi 58D99
B9B9EA8

dO5dP598CC9
BCBCE88

_ a5Rd5CCEB
BCBBCGG

dO5dP59AAED
BBF9B79

_ a5Sd5CCD>
A9B7CA3B9B9EBG

dO5dP5DDD9
FGDCAEF

_ a5Sd5CCDC
A9B7CB3B9B9ECD

dO5dP5GGGG
B9BDAEE3BCBB9ED

_ a5dP5EB9D
ACABD7

dO5h a5>FBB
BCBABC7

_ a5dP5FGF>
A998BE /403B9B9DEA /40

dO5h a5>FBC
BCBABDF

dO5Sd5BG8E
A997EG3B9B9DEA

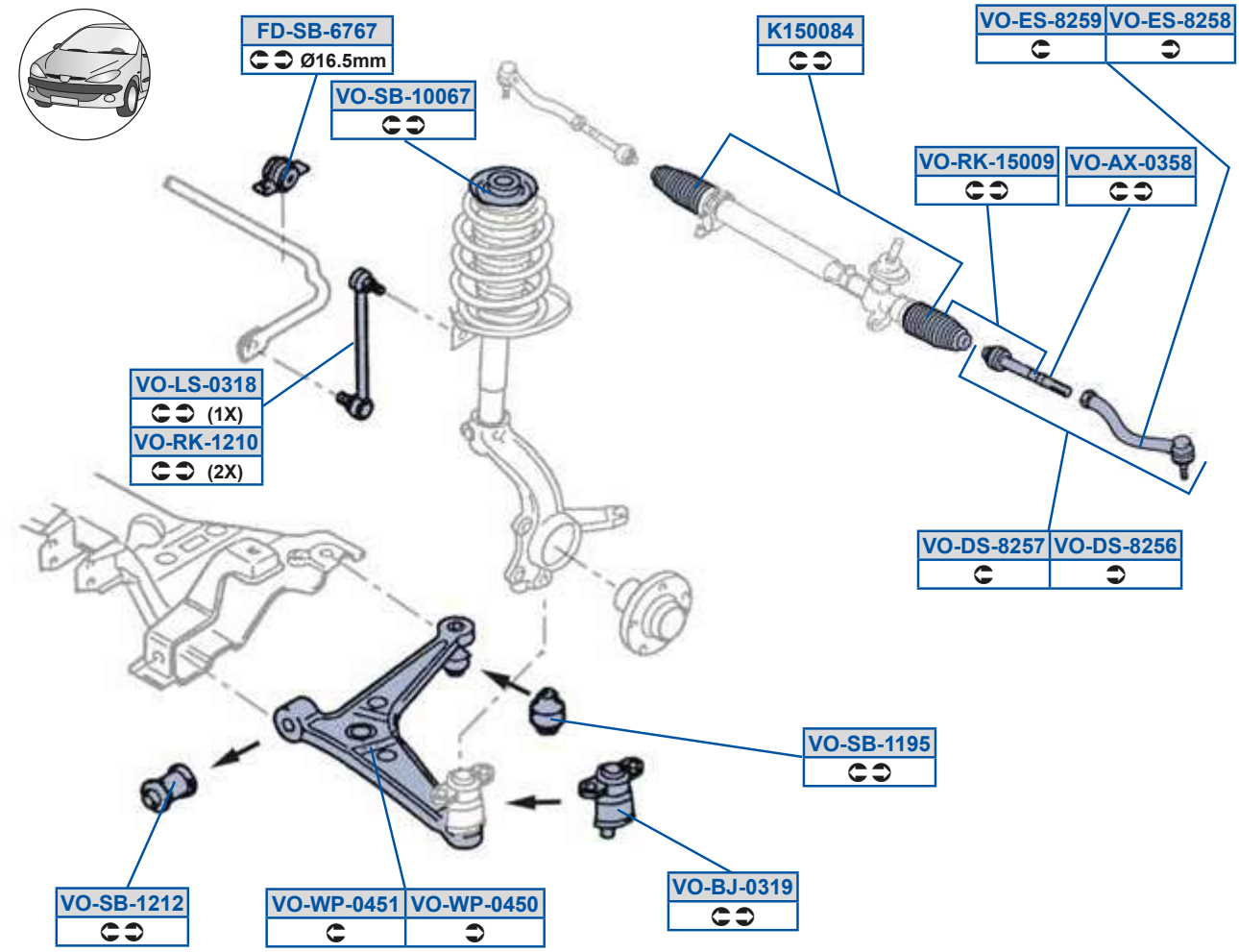
FD-SB-6767
Ø16.5mm
VO-SB-10067
K150084
VO-ES-8259
VO-ES-8258
VO-RK-15009
VO-AX-0358
VO-LS-0318
(1X)
VO-RK-1210
(2X)
VO-DS-8257
VO-DS-8256
VO-SB-1195
VO-SB-1212
VO-WP-0451
VO-WP-0450
VO-BJ-0319

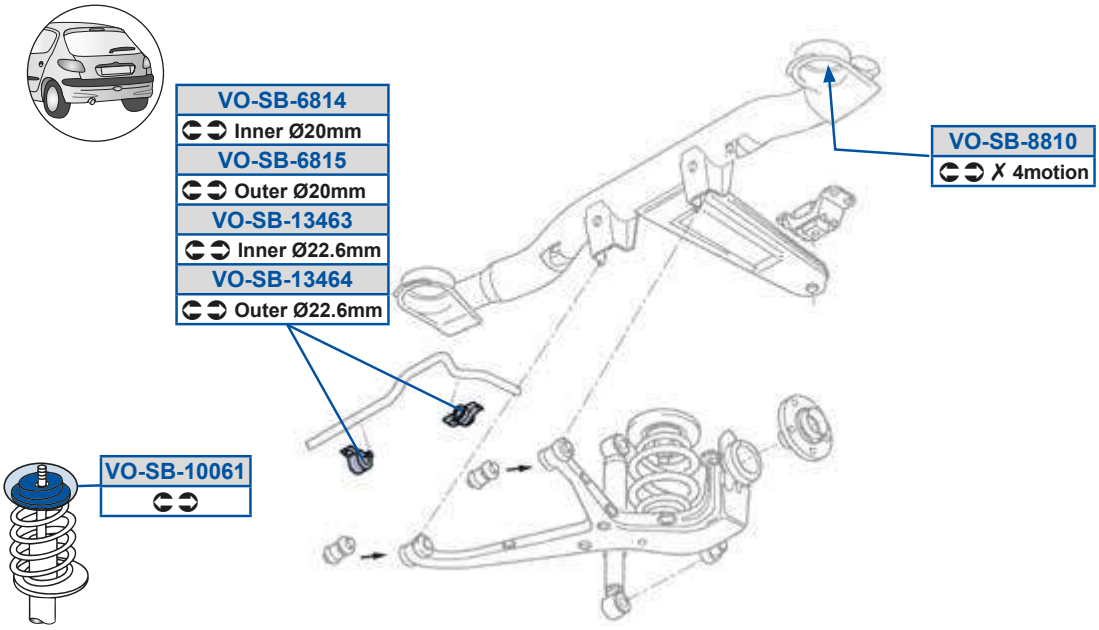
VO-SB-6814
Inner Ø20mm
VO-SB-6815
Outer Ø20mm
VO-SB-13463
Inner Ø22.6mm
VO-SB-13464
Outer Ø22.6mm
VO-SB-8810
✗ 4motion
VO-SB-10061

TR5dP5DEDE
Ea 7B887A8

g_ 5Zd58A9F
Ea 7B88A8EQ3Ea 7B88A8ER

g_ 5dP59ABDB
Ea 7C88B8BQ

Y9C88FB
Ea 7B99FA8P3Ea AB99FA8

g_ 5cY59>98
Ea ABGFA8E

g_ 5dP5DF9B
Ea 7C88B8A0

g_ 5Oi 58ACF
Ea AB99F7B

g_ 5cY59C88G
Ea AB99F7B

g_ 5dP5DF9C
877GDBG

g_ 5PX58A9G
E977GBD3Ea 7B7EADC0

g_ 5dP5988D9
8E8C8AAAA38G8C89AAA

g_ 5dP5FF98
Ea 7C7C999P

g_ 5Rd5F>CD
Ea 7B99F7BT3Ea 7B99F7BU

g_ 5dP5988DE
8X7B899BG3ACEB899BG

g_ 5h a58BC8
Ea 7B7E8C8P3Ea 7B7E8C9P

g_ 5Rd5F>CE
Ea 7B99F7AT3Ea 7B99F7AU

g_ 5dP599GC
87BBCE83Ea 7B7E8F8

g_ 5h a58BC9
Ea 7B7E8C8P3Ea 7B7E8C9P

g_ 5Sd5F>CF
Ea 7B99F8F3Ea 7B99F8F0

g_ 5dP59>9>
E978E8E3Ea 7B7E8F80

g_ 5Sd5F>CG
Ea 7B99F8E03Ea 7B99F8EP

g_ 5dP59ABDA
Ea 7C88B8AP

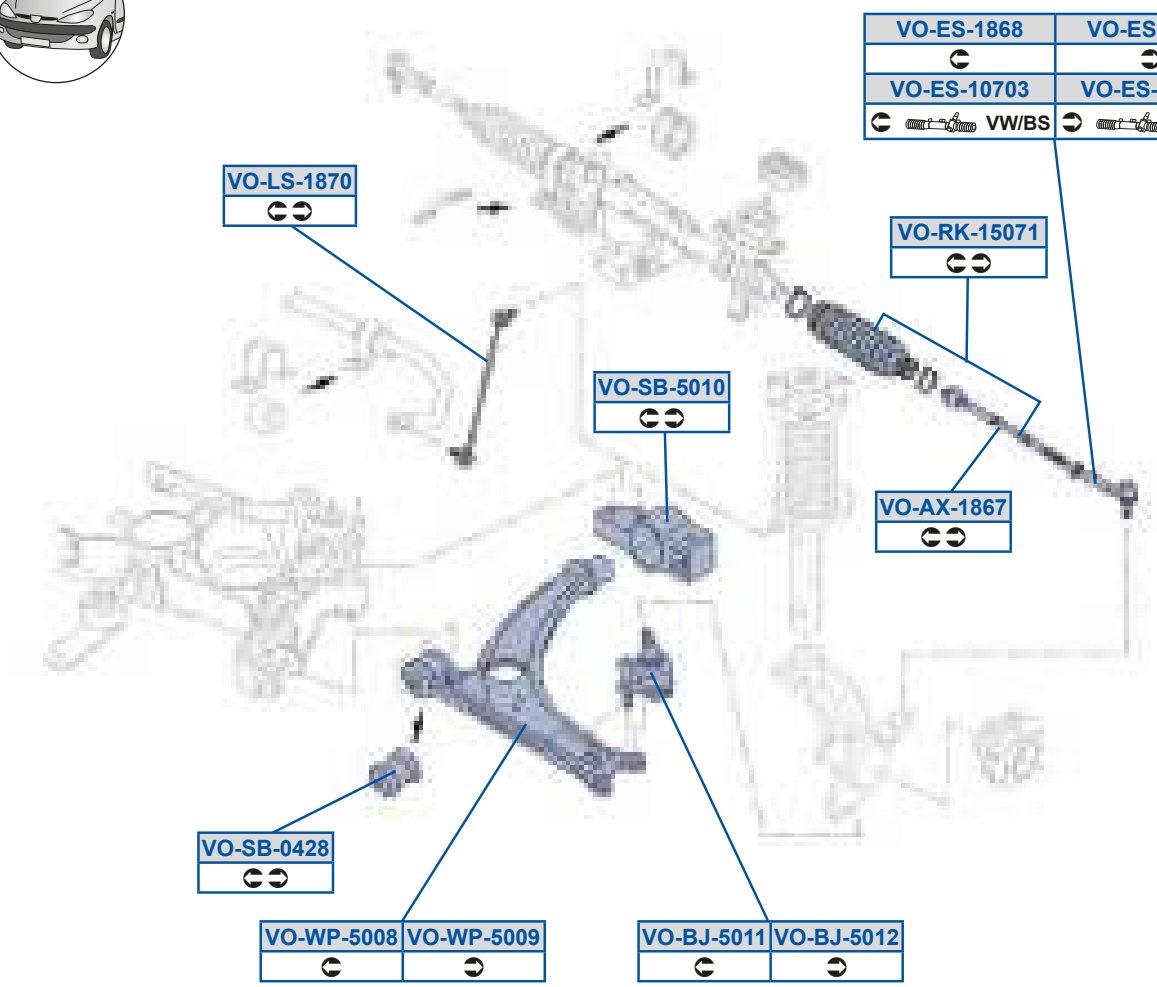
VO-ES-1868
VO-ES-1869
VO-ES-10703
VO-ES-10704
VW/BS
VW/BS
VO-LS-1870
VO-RK-15071
VO-SB-5010
VO-AX-1867
VO-SB-0428
VO-WP-5008
VO-WP-5009
VO-BJ-5011
VO-BJ-5012

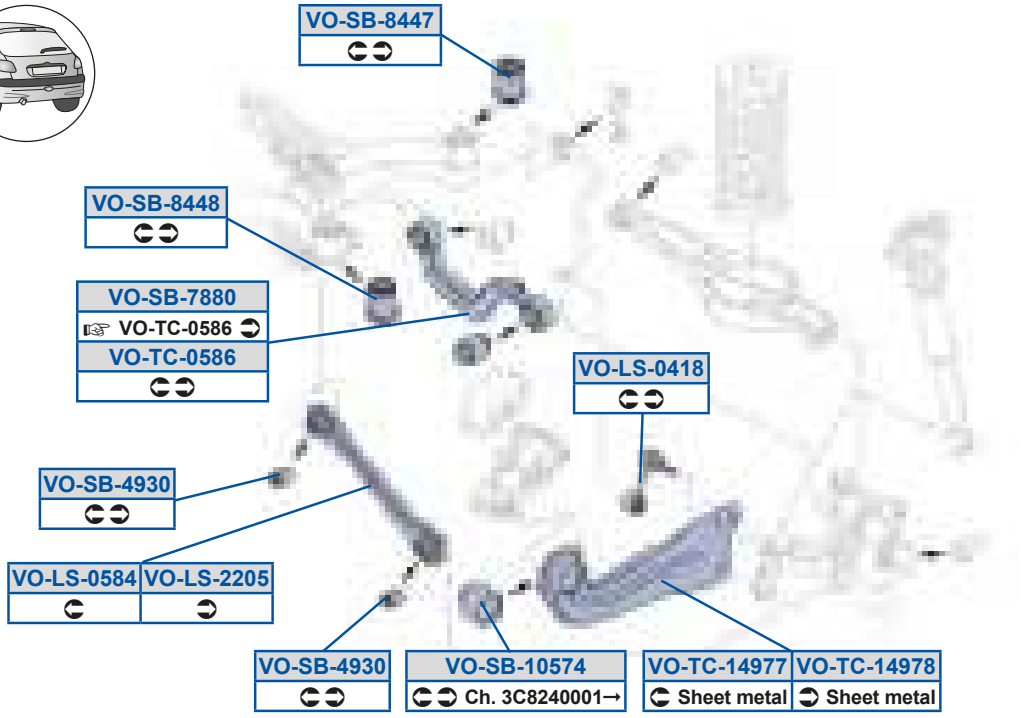
VO-SB-8447
VO-SB-8448
VO-SB-7880
VO-TC-0586
VO-TC-0586
VO-LS-0418
VO-SB-4930
VO-LS-0584
VO-LS-2205
VO-SB-4930
VO-SB-10574
Ch. 3C8240001→
VO-TC-14977
Sheet metal
VO-TC-14978
Sheet metal

g_ 5Oi 59FDE
8Y7B9AF87O

g_ 5Zd58CFB
8Y7C78C9GS38Y7C78C9GT

g_ 5dP5EFF8
8Y7C7CCCA38Y7C7CCCAO

g_ 5PX5C899
AQ7B7EADCO3AQ7B7EADCP

g_ 5Zd59FE8
8Y7B88A8CP38Y7B88A8CX

g_ 5dP5FBBE
8Y7C7C8BCS38Y7C7C8BCU

g_ 5PX5C89>
AQ7B7EADDO3AQ7B7EADDP

g_ 5Zd5>>8C
8Y7C78CA7P38Y7C78CA7Q

g_ 5dP5FBBF
8Y7C7C8BCT38Y7C7C8BCV

g_ 5Sd598E8A
8Y7B9AF88Q38Y7B9AF88R

g_ 5cY59C8E9
8Y7B9AF87O

g_ 5eQ58CFD
8Y7C7CA9AV38Y7C7CA9Ad

g_ 5Sd598E8B
8Y7B9AF89Q38Y7B9AF89R

g_ 5dP58B>F
8Y7B7E8F938Y7B7E8F9O

g_ 5eQ59BGEE
AQ7C7C99AQ3AQ7C7C99AS

g_ 5Sd59FDF
8Y7B9AF88O38Y7B9AF88P

g_ 5dP598CEB
AQ7C7CCB8

g_ 5eQ59BGEF
AQ7C7C99BQ3AQ7C7C99BS

g_ 5Sd59FDG
8Y7B9AF89O38Y7B9AF89P

g_ 5dP5BGA8
8Y7C7CCB8Q38Y7C7CCB8R

g_ 5h a5C88F
AQ7B7E8C8O3AQ7B7E8C8P

g_ 5Zd58B9F
8Y7C7CBDCO038Y7C7CBDCQ

g_ 5dP5C898
AQ78GG9A8O3AQ78GG9A8P

g_ 5h a5C88G
AQ7B7E8C8O3AQ7B7E8C8P

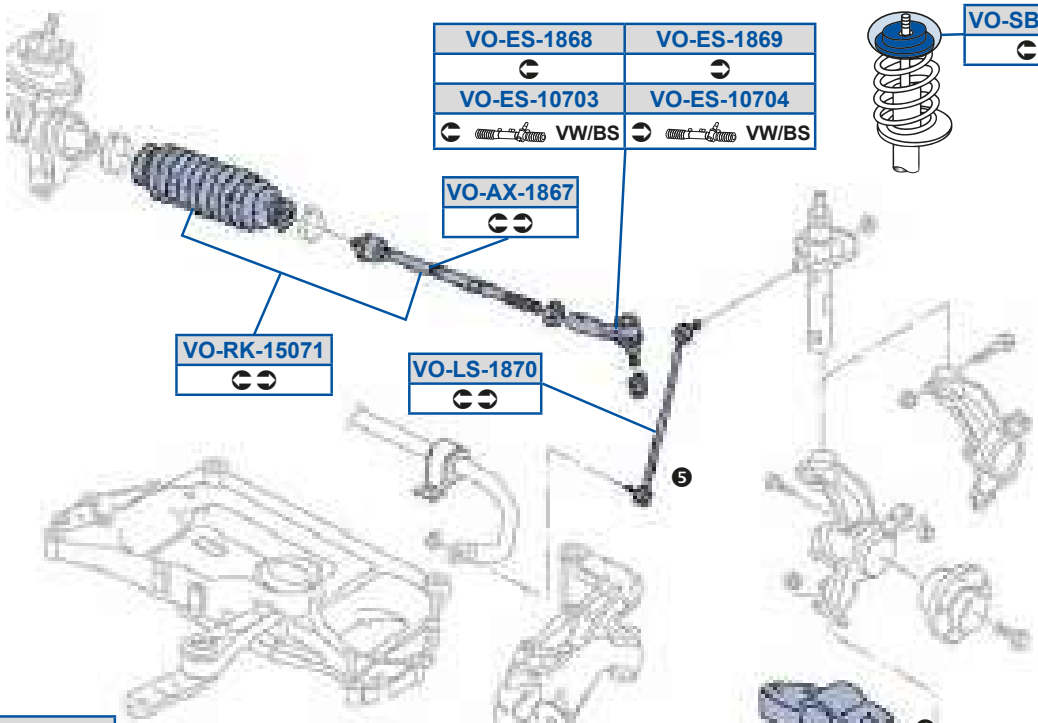
VO-ES-1868
VO-ES-1869
VO-ES-10703
VW/BS
VO-ES-10704
VW/BS
VO-SB-10066
VO-AX-1867
VO-RK-15071
VO-LS-1870
5

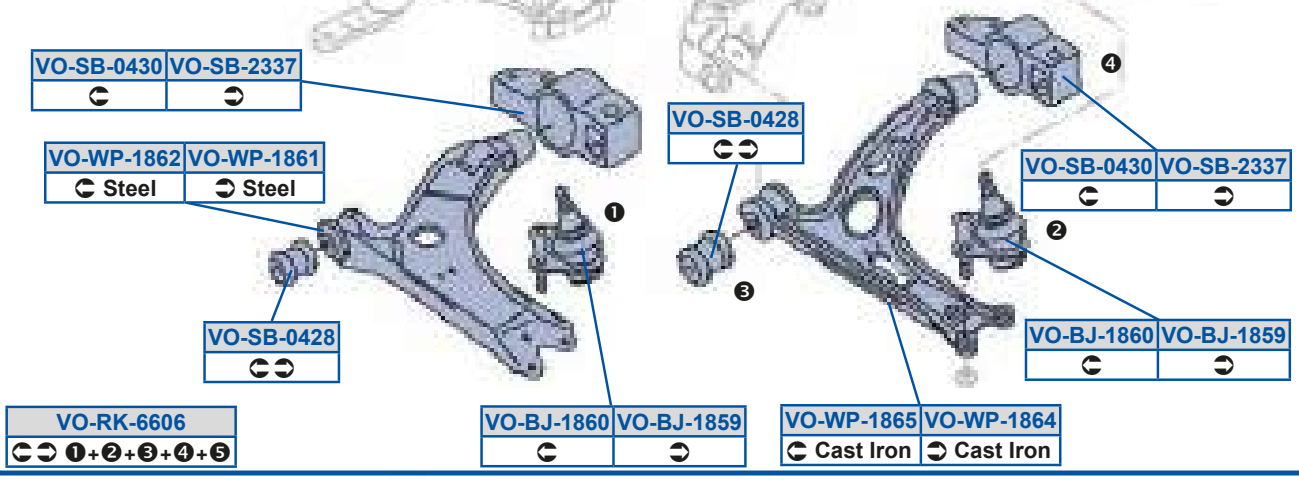
VO-SB-0430
VO-SB-2337
VO-WP-1862
Steel
VO-WP-1861
Steel
VO-SB-0428
VO-SB-0428
VO-SB-0430
VO-SB-2337
VO-BJ-1860
VO-BJ-1859
VO-RK-6606
1+2+3+4+5
VO-BJ-1860
VO-BJ-1859
VO-WP-1865
Cast Iron
VO-WP-1864
Cast Iron
1
2
3
4

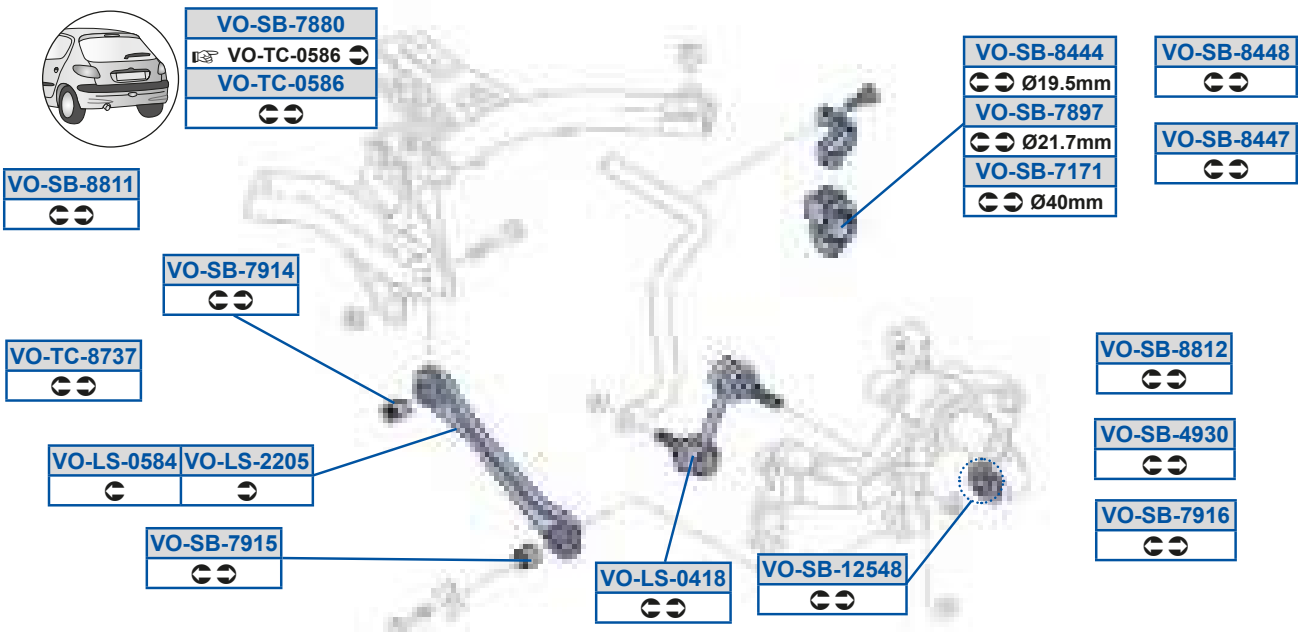
VO-SB-7880
VO-TC-0586
VO-TC-0586
VO-SB-8811
VO-SB-7914
VO-TC-8737
VO-LS-0584
VO-LS-2205
VO-SB-7915
VO-LS-0418
VO-SB-12548
VO-SB-8444
Ø19.5mm
VO-SB-7897
Ø21.7mm
VO-SB-7171
Ø40mm
VO-SB-8448
VO-SB-8447
VO-SB-8812
VO-SB-4930
VO-SB-7916

MOOG

g_ 5Oi 59FDE
8Y7B9AF87O

g_ 5Zd58CFB
8Y7C78C9GS38Y7C78C9GT

g_ 5dP59>CBF
8Y7C7CCCA38Y7C7CCCAO

g_ 5dP5EG9D
8Y7C7C8E8Q38Y7C7C8EAQ

g_ 5PX59FCG
8Y7B7EADDP38Y7B7EADDQ

g_ 5Zd59FE8
8Y7B88A8CP38Y7B88A8CX

g_ 5dP5>AAE
8Y78GG9A9U38Y78GG9A9X

g_ 5dP5FBBB
8Y7C88A9EOI

g_ 5PX59FD8
8Y7B7EADCP38Y7B7EADCQ

g_ 5Zd5>>8C
8Y7C78CA7P38Y7C78CA7Q

g_ 5dP5BGA8
8Y7C7CCB8Q38Y7C7CCB8R

g_ 5dP5FBBE
8Y7C7C8BCS38Y7C7C8BCU

g_ 5Sd598E8A
8Y7B9AF88Q38Y7B9AF88R

g_ 5c Y59C8E9
8Y7B9AF87O

g_ 5dP5E9E9
8Y7C88BAGS

g_ 5dP5FBBF
8Y7C7C8BCT38Y7C7C8BCV

g_ 5Sd598E8B
8Y7B9AF89Q38Y7B9AF89R

g_ 5c Y5DD8D

g_ 5dP5EFF8
8Y7C7CCCA38Y7C7CCCAO

g_ 5dP5FF99
8Y7C7C9EGO

g_ 5Sd59FDF
8Y7B9AF88O38Y7B9AF88P

g_ 5dP58B>F
8Y7B7E8F938Y7B7E8F9O

g_ 5dP5EFGE
8Y7C88A9EOo

g_ 5dP5FF9>
8Y7C7C97AO

g_ 5Sd59FDG
8Y7B9AF89O38Y7B9AF89P

g_ 5dP58BA8
8Y78GG9A8U38Y78GG9A8X

g_ 5dP5EG9B
8Y7C78CB8Q

g_ 5eQ58CFD
8Y7C7CA9AV38Y7C7CA9Ad

g_ 5Zd58B9F
8Y7C7CBDCO038Y7C7CBDCQ

g_ 5dP5988DD
Dd7B899BGQ

g_ 5dP5EG9C
8Y7C7CCBAO

g_ 5eQ5FEAE
8Y7C7CA88OO38Y7C7CA88OP

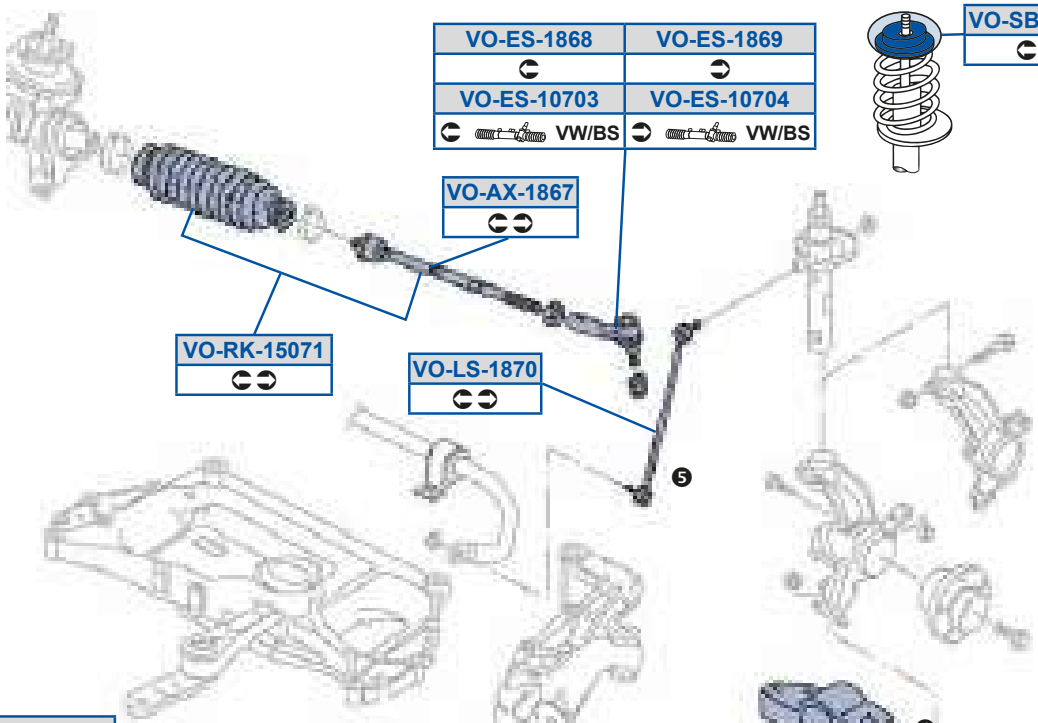
VO-ES-1868
VO-ES-1869
VO-ES-10703
VW/BS
VO-ES-10704
VW/BS
VO-SB-10066
VO-AX-1867
VO-RK-15071
VO-LS-1870
5

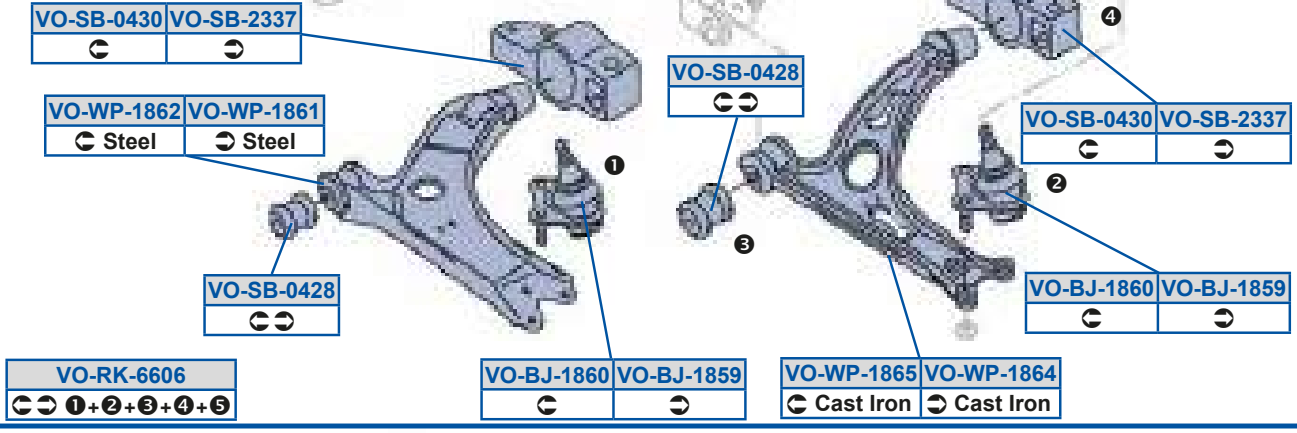
VO-SB-0430
VO-SB-2337
VO-WP-1862
Steel
VO-WP-1861
Steel
VO-SB-0428
VO-SB-0428
VO-SB-0430
VO-SB-2337
VO-BJ-1860
VO-BJ-1859
VO-RK-6606
1+2+3+4+5
VO-BJ-1860
VO-BJ-1859
VO-WP-1865
Cast Iron
VO-WP-1864
Cast Iron
1
2
3
4

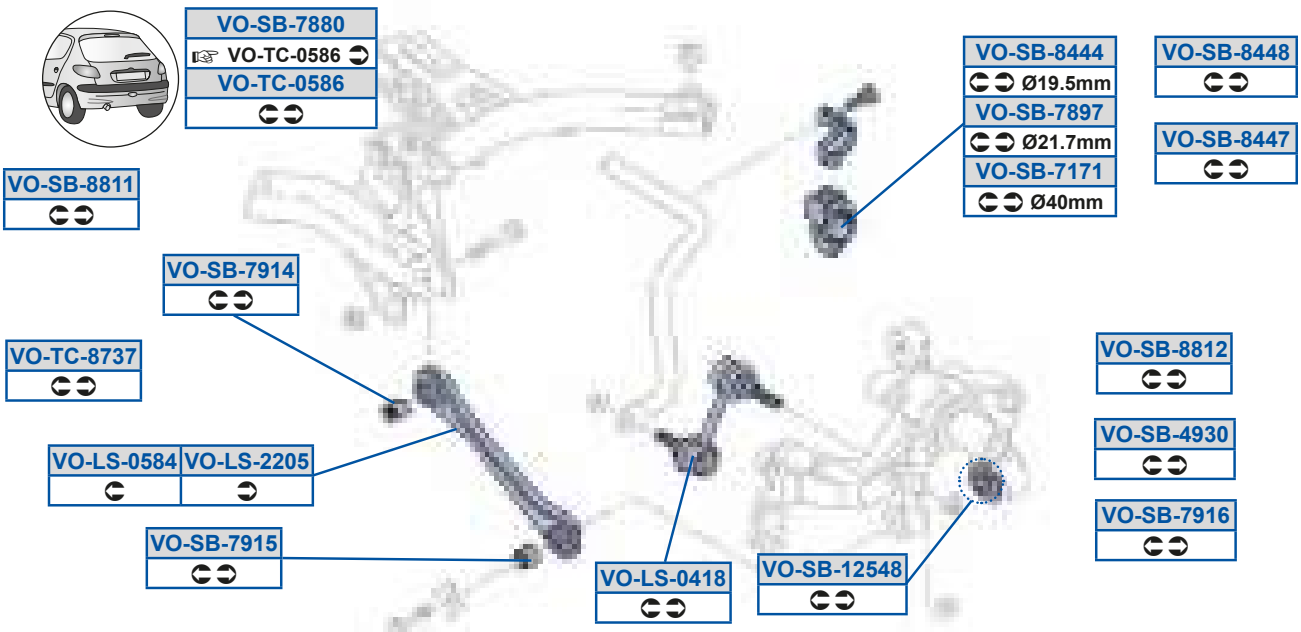
VO-SB-7880
VO-TC-0586
VO-TC-0586
VO-SB-8811
VO-SB-7914
VO-TC-8737
VO-LS-0584
VO-LS-2205
VO-SB-7915
VO-LS-0418
VO-SB-12548
VO-SB-8444
Ø19.5mm
VO-SB-7897
Ø21.7mm
VO-SB-7171
Ø40mm
VO-SB-8448
VO-SB-8447
VO-SB-8812
VO-SB-4930
VO-SB-7916

MOOG

g_ 5h a59FD9

8Y7B7E8C90O38Y7B7E8C90P

g_ 5h a59FD>

8Y7B7E8C80O38Y7B7E8C80P

g_ 5h a59FDB

8Y7B7E8C90Q38Y7B7E8C90R

g_ 5h a59FDC

8Y7B7E8C80Q38Y7B7E8C80R

K150081
K150083

VO-ES-8247	VO-ES-8246
→Ch.6H-W027753	→Ch.6H-W027753
VO-ES-0511	VO-ES-0510
Ch.6H-W027754 →	Ch.6H-W027754 →

VO-DS-8245	VO-DS-8244
VO-DS-3535	VO-DS-3536
Ch.6H-027754 →	Ch.6H-027754 →

VO-SB-7147
Ø18mm
VO-SB-8813
Ø20mm

VO-SB-10052

VO-AX-1812
VO-AX-8275
→Ch.6H-W027753
VO-AX-1715
Ch.6H-W055366→

VO-LS-0463
Ø18mm
VO-LS-3353
Ø20mm

VO-SB-1368

VO-SB-1367

VO-WP-0236	VO-WP-0235
13" →Ch.6H-W055365	13" →Ch.6H-W055365
VO-WP-0235	VO-WP-0236
14" →Ch.6H-W055365	14" →Ch.6H-W055365
VO-WP-1520	VO-WP-1519
Ch.6H-W055366→	Ch.6H-W055366→

VO-BJ-8249	VO-BJ-8248
13"	13"
VO-BJ-8248	VO-BJ-8249
14"	14"

VO-SB-4482

Y9C88F9
Dd7B8GFA8

g_ 5Rd5ACAD
Dd7B99F7B3Dd7B99F7B0

g_ 5Zd5AACA
Dd7B88A8C03Dd7B88A8CP

g_ 5h a58>AD
Dd7B7E8C83Dd7B7E8C8P

Y9C88FA
DS7B8GFA83Dd7B99FA8

g_ 5Rd5F>BB
Dd7B8GF7B

g_ 5dP5988C>
8X7B899BG3Dd7B89AA8

g_ 5h a59C9G
D 7B7E8C80

g_ 5Oi 59E9C
D 7B99F7A0/40

g_ 5Rd5F>BC
Dd7B8GF7A

g_ 5dP59ADE
Dd7B7E8F9

g_ 5h a59C>8
Dd7B7E8C803D 7B7E8C80

g_ 5Oi 59F9>
D 7B8GF7A0/40

g_ 5Sd58C98
DS7B8GF883DS7B8GF89

g_ 5dP59ADF
Dd7B7E8F8

g_ 5Oi 5F>EC
Dd7B99F7A/40

g_ 5Sd58C99
DS7B8GF883DS7B8GF89

g_ 5dP5BBF>
Dd7C78CB8R

g_ 5PX5F>BF
Dd7B7EADC0

g_ 5Sd5F>BD
8G8B8GF893A07B99F89

g_ 5dP5E9BE
D 7B88A8A

g_ 5PX5F>BG
Dd7B7EADC

g_ 5Sd5F>BE
Dd7B88F883Dd7B8GF88

g_ 5dP5FF9A
D 7B88A8A0

g_ 5Rd5ACAC
Dd7B99F7A3Dd7B99F7A0

g_ 5Zd58BDA
Dd7B88A8C3Dd7B88A8CQ

g_ 5h a58>AC
Dd7B7E8C83Dd7B7E8C8P

Q_cR_PO ODY94DY; 1	8; 7GA 9878;	Q_cR_PO gt é ODYC1	8F7GD 9; 78;

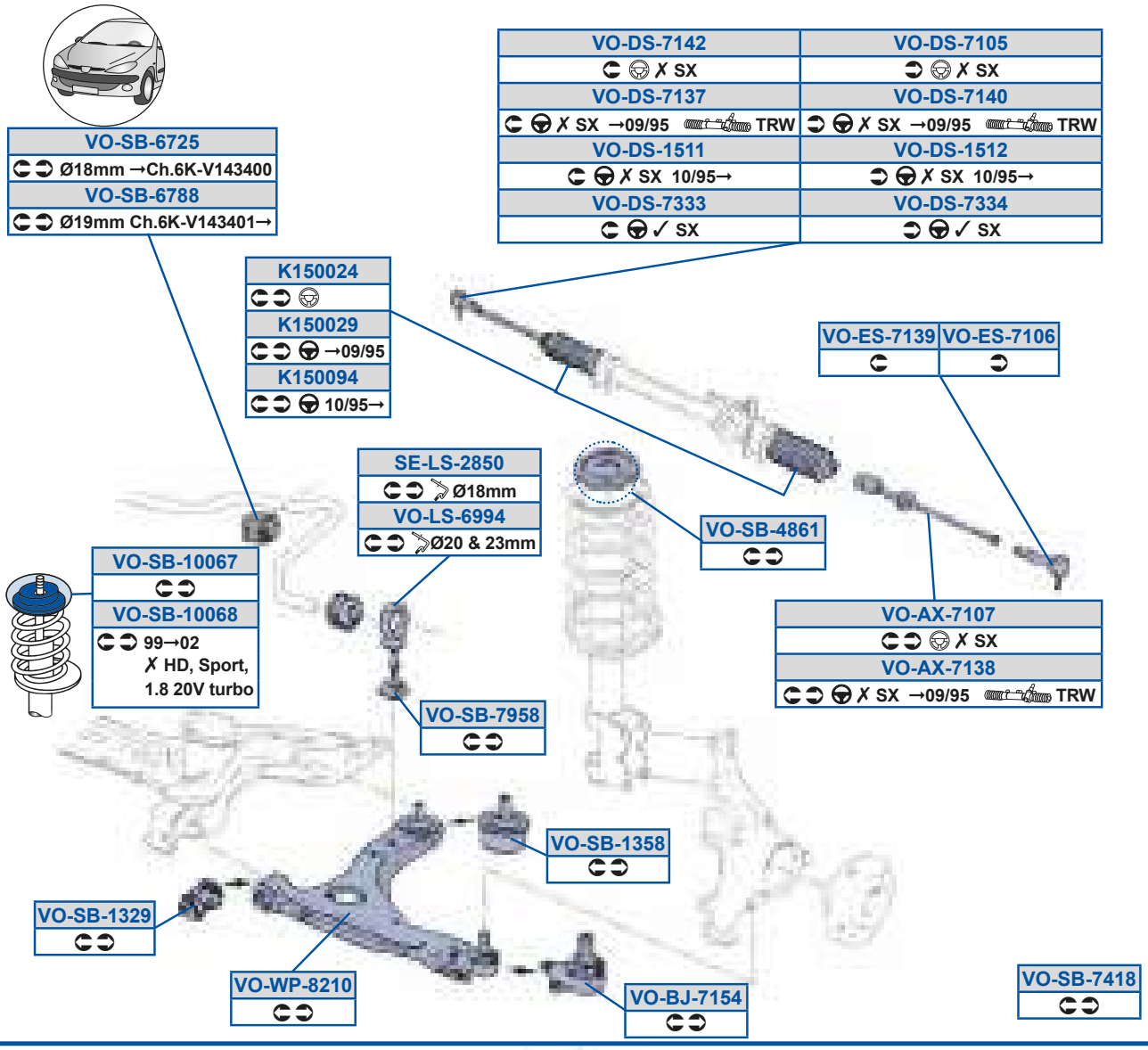

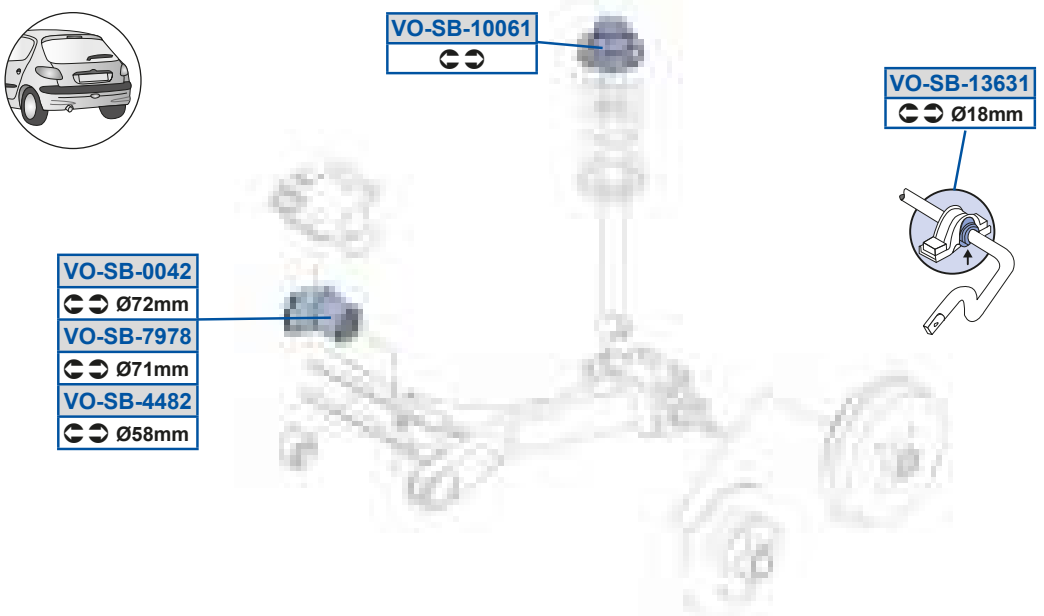

MOOG

Y9C88>B
8G8B8GFA8

g_ 5Rd59C9>
DY7B99F7AR3DY7B99F7B

g_ 5Sd5E9AG
8G8B8GF8838G8B8GF89

g_ 5dP59ADA9
FE8C88B9A

Y9C88>G
8ECB99FA838G8B99FA8

g_ 5Rd5E98C
8G8B8GF7B38G8B8GF7B0

g_ 5Zd5DGGB
DY7B88A8C

g_ 5dP5BBF>
Dd7C78CB8R

Y9C88GB
8V7B99FA8P3ACEB99FA80

g_ 5Rd5E9AE
8G8B99F7A38G8B99F7A0

g_ 5dP588B>
8X7C78CB8Q

g_ 5dP5BFD9
8G8B89A9G

dS5Zd5>FC8
8G8B88A8C0

g_ 5Rd5E9B8
8G8B99F7B38G8B99F7B0

g_ 5dP5988D9
8E8C8AAAA38G8C89AAA

g_ 5dP5DE>C
8G8B88A8B

g_ 5Oi 5E98E
8G8B8GF983DY7B99F7A0 /40

g_ 5Rd5E9B>
8G8B8GF7A38G8B8GF7A0

g_ 5dP5988DE
8X7B899BG3ACEB899BG

g_ 5dP5DEFF
8V7B88A8B

g_ 5Oi 5E9AF
8G8B99F9803DY7B99F7AP

g_ 5Rd5EAAA
DY7B99F7AP3DY7B99F7AS

g_ 5dP5988DF
Dd7B89AA8S

g_ 5dP5EB9F
8G8B7E8G70

g_ 5PX5E9CB
ACEB7EACD03ACEB7EADC

g_ 5Rd5EAAB
DY7B99F7BP3DY7B99F7BS

g_ 5dP59A>G
8G8B7E8F93ACEB7E8F9

g_ 5dP5EGCF
8G8B88A9G

g_ 5Rd59C99
DY7B99F7A3DY7B99F7A0

g_ 5Sd5E98D
8G8B8GF893A07B99F89

g_ 5dP59ACF
8G8B7E8F8R38G8B7E8F8S

g_ 5dP5EGEF
DY7C78CB803Dd7C78CB8S

Q_cR_PO ODY94DY; 1	8; 7GA 9878;	Q_cR_PO gt é ODYC1	8F7GD 9; 78;

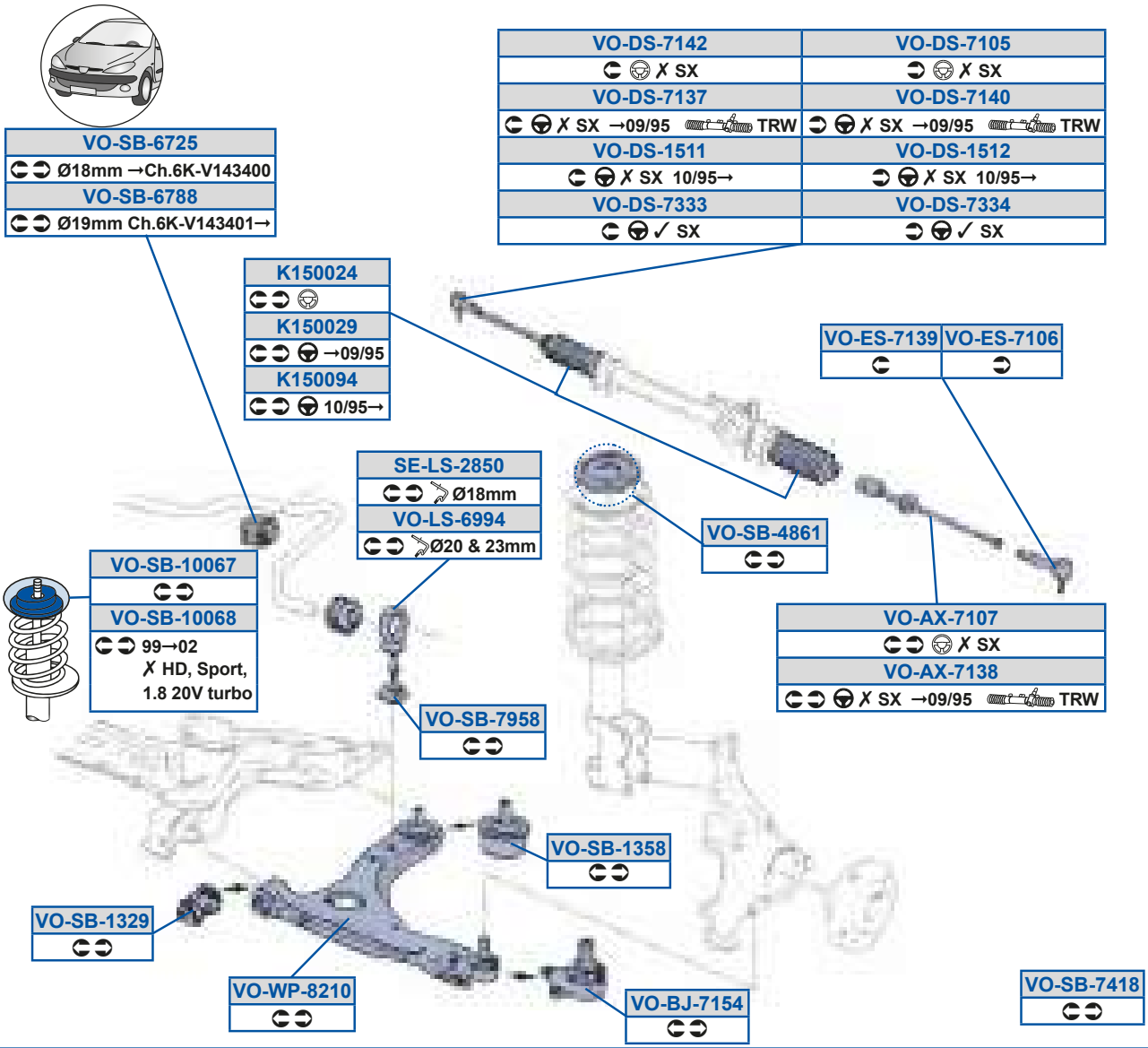

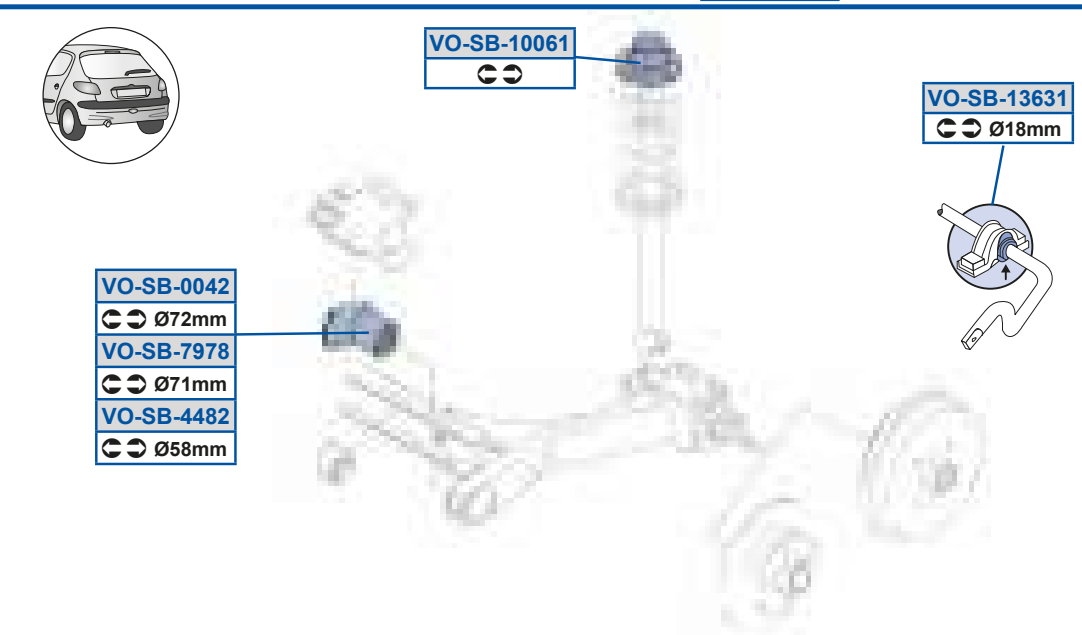

MOOG

g_ 5h a5F>98

8G8B7E8C8P38G8B7E8CA0

Q u sr 8G7>88> 5L1 IDZ>n

K150187
→ Ch.623162980
K150235
Ch.623162981 →
K150234
SMI-KOYO

VO-RK-15053
→ Ch.623162980
VO-RK-15062
Ch.623162981 →

SE-AX-0091
TRW
VO-AX-7107
VO-AX-12550
SMI

VO-SB-10068

VO-SB-7896
Ø16mm
VO-SB-7895
Ø17mm
VO-SB-7419
Ø18mm

VO-LS-0494

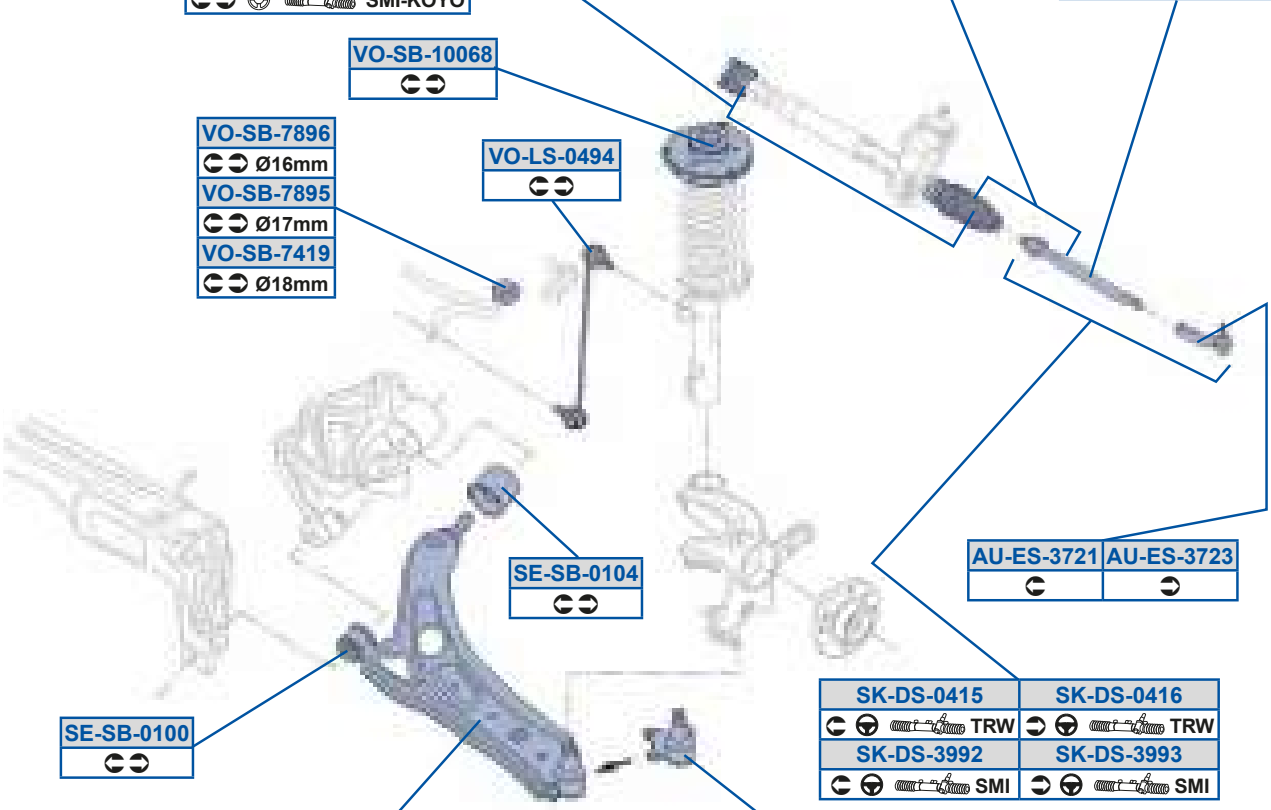

SE-SB-0104

AU-ES-3721	AU-ES-3723

SK-DS-0415	SK-DS-0416
TRW	TRW
SK-DS-3992	SK-DS-3993
SMI	SMI

SE-SB-0100

VO-WP-1116	VO-WP-1989
VO-WP-8837	VO-WP-8838
Ch.6L-8-173 860 →	Ch.6L-8-173 860 →

SK-BJ-0413	SK-BJ-0414

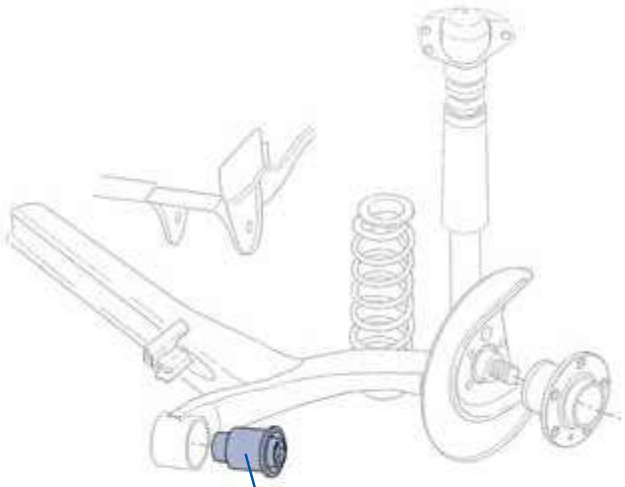

VO-SB-0042	VO-SB-4857
✗ Accessories	✓ Accessories

MOOG

Of 5Sd5AE>9
Cu7B99F88O3DI 7B8GF88Q

dY5PX58B9A
DI 7B7EADC03DI 7B7EADCa

g_ 5Zd58BGB
DI 7B88A8C03DI 7B88A8CP

g_ 5dP5EFGD
DI 7B88A8BX3DI 7B88A8BZ

Of 5Sd5AE>A
DI 7B8GF89Q3DI 7B9AF89

dY5PX58B9B
DI 7B7EADD03DI 7B7EADDa

g_ 5c Y59C8CA
DI 7B9AF7AP /40BDI 7B9AF98P

g_ 5h a5999D
DI 7B7E8C8RZ3DI 7B7E8C8S

Y9C89FE
DS7B8GFA8

dY5Rd58B9C
DI 7B8GF7AP3DI 7B9AF7AP

g_ 5c Y59C8D>
DI 7B9AF7AP /40BDI 7B9AF98P

g_ 5h a59GFG
DI 7B7E8C8Rn3DI 7B7E8C8S

Y9C8>AB
DI 7B9AFA8O

dY5Rd58B9D
DI 7B8GF7BP3DI 7B99F7Bi

g_ 5dP588B>
8X7C78CB8Q

g_ 5h a5FFAE
Dn7B7E8C83Dn7B7E8C8S

Y9C8>AC
DI 7B9AFA8R

dY5Rd5AGG>
DI 7B9AF7AQ3DI 7B9AF7AU

g_ 5dP5988DF
Dd7B89AA8S

g_ 5h a5FFAF
Dn7B7E8C93Dn7B7E8C9S

dS5Oi 588G9
DI 7B9AF7AP /40BDI 7B9AF98P

dY5Rd5AGGA
DI 7B9AF7BQ3DI 7B9AF7BU

g_ 5dP5BFCE
8X7C78CB8R

dS5dP58988
DI 7B7E8F9O

g_ 5Oi 59>CC8
DI 7B9AF87Q

g_ 5dP5EB9G
DI 7B88A8BS3DI 7B88A8Bd

dS5dP5898B
8Y7B7E8FAS3DI 7B7E8FA

g_ 5Oi 5E98E
8G8B8GF983DY7B99F7AO /40

g_ 5dP5EFGC
DI 7B88A8Ba 3DI 7B88A8BI

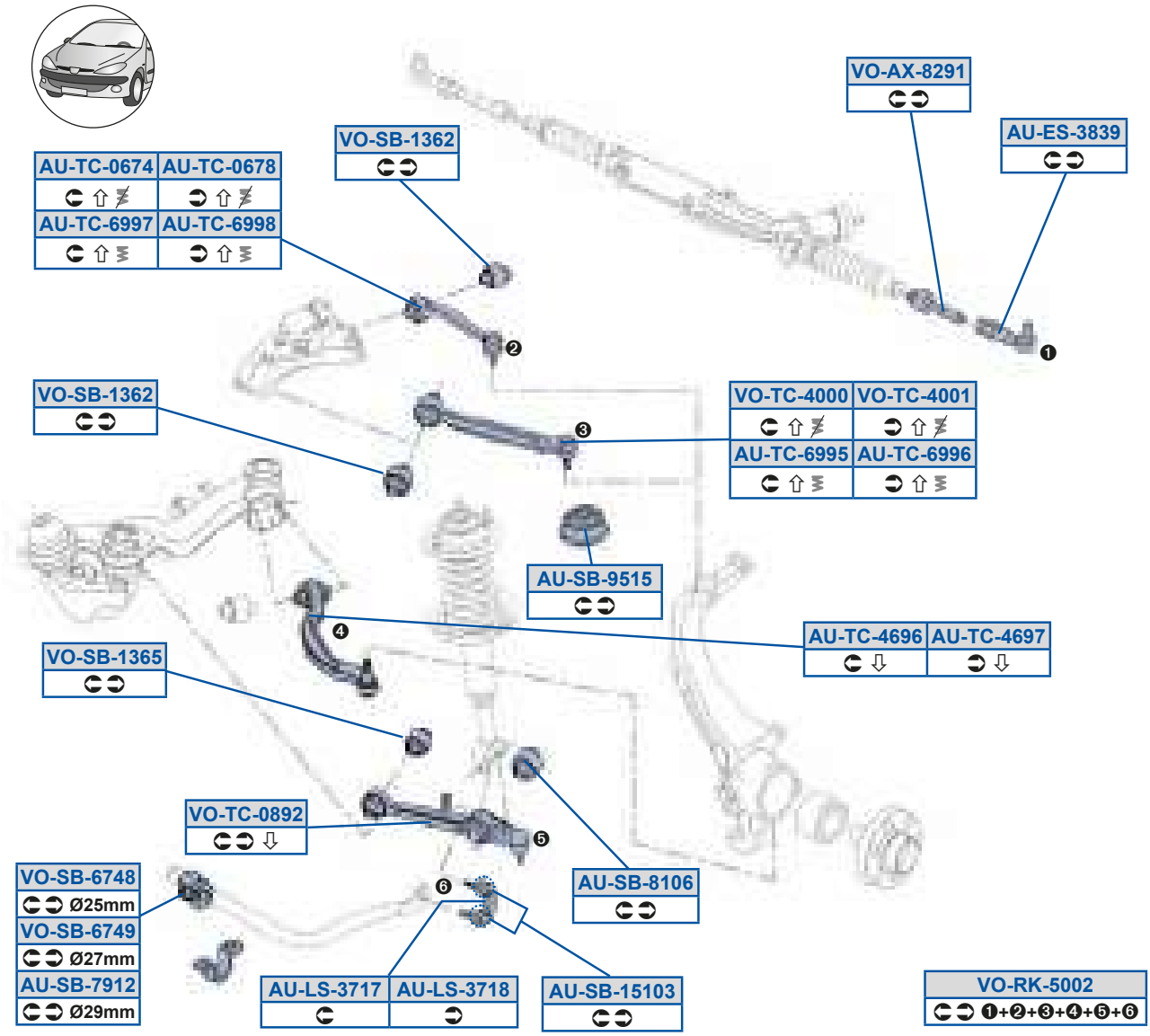
VO-AX-8291
AU-ES-3839
VO-SB-1362
AU-TC-0674
AU-TC-0678
AU-TC-6997
AU-TC-6998
VO-SB-1362
VO-TC-4000
VO-TC-4001
AU-TC-6995
AU-TC-6996
AU-SB-9515
AU-TC-4696
AU-TC-4697
VO-SB-1365
VO-TC-0892
VO-SB-6748
Ø25mm
VO-SB-6749
Ø27mm
AU-SB-7912
Ø29mm
AU-SB-8106
AU-LS-3717
AU-LS-3718
AU-SB-15103
VO-RK-5002
❶+❷+❸+❹+❺+❻

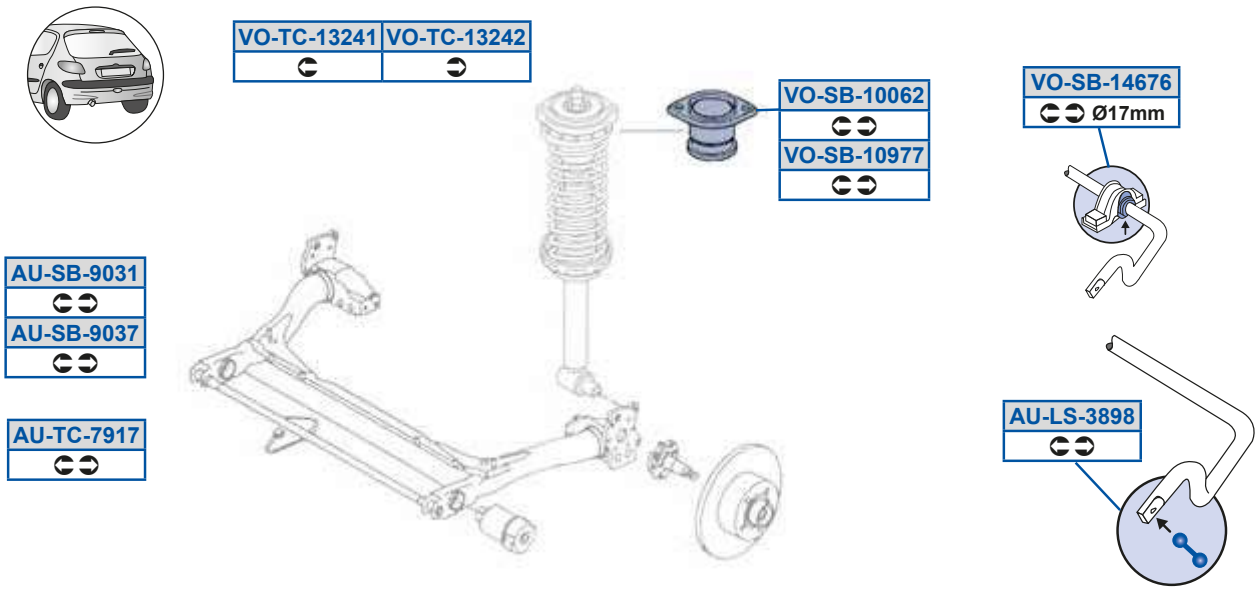
VO-TC-13241
VO-TC-13242
VO-SB-10062
VO-SB-10977
VO-SB-14676
Ø17mm
AU-SB-9031
AU-SB-9037
AU-TC-7917
AU-LS-3898

Of 5Sd5AFAG
BT7B8GF88Q3BT7B8GF88R

Of 5dP5G8AE
FS7C7C8BC0i

Of 5eQ5DGGE
FS7B7EC7GQ3FS7B7EC7GS

g_ 5dP59ADC
BR7B7E8F9S3BR7B7E8F9U

Of 5Zd5AE9E
FS7B88A8E

Of 5dP5GC9C
BR7B89ADG03FS7B89AEE

Of 5eQ5DGGF
FS7B7EC87Q3FS7B7EC87S

g_ 5dP59BDED
FS7C88A9E0

Of 5Zd5AE9F
FS7B88A8F

Of 5eQ58DEB
BR7B7EC7GY3FR7B7EC7G0

Of 5eQ5EG9E
FS7C78C9GU3FS7C78C9GY

g_ 5dP5DEBF
BR7B88A9ES3BR7B88A9EU

Of 5Zd5AFGF
FS7C7CBDCS3FS7C7CBDCU

Of 5eQ58DEF
BR7B7EC87Y3FR7B7EC870

g_ 5Oi 5F>G9
BR7B8GF78P /40

g_ 5dP5DEBG
BR7B88A9ET3BR7B88A9EV

Of 5dP59C98A
FS7B88A8E /40

Of 5eQ5BDGD
FS7B7EDGA0Z

g_ 5cY5C88>
FS7B7E8C8no9

g_ 5eQ58FG>
FS7B7E8C8n

Of 5dP5EG9>
BR7B88A9EX

Of 5eQ5BDGE
FS7B7EDGB0Z

g_ 5dP5988D>
FSe C8AACAP3FSe C8AACAR

g_ 5eQ59A>B9
An7C7CA9A3FS7C7CA9Aa

Of 5dP5F98D
FS7B7E8F8P3FS7B7E8F8Q

Of 5eQ5DGGC
FS7B7EC7CQ3FS7B7EC7CS

g_ 5dP598GEE
BT74C8A4ACA03BT74C8A4ACAP

g_ 5eQ59A>B>
An7C7CA9B3FS7C7CA9Ba

Of 5dP5G8A9
FS7C7C8BC0n

Of 5eQ5DGGD
FS7B7EC7DQ3FS7B7EC7DS

g_ 5dP59AD>
BP7B7EC8C3BR7B7EC8CQ

g_ 5eQ5B888
FR7B7EC7C03FR7B7EC7CP

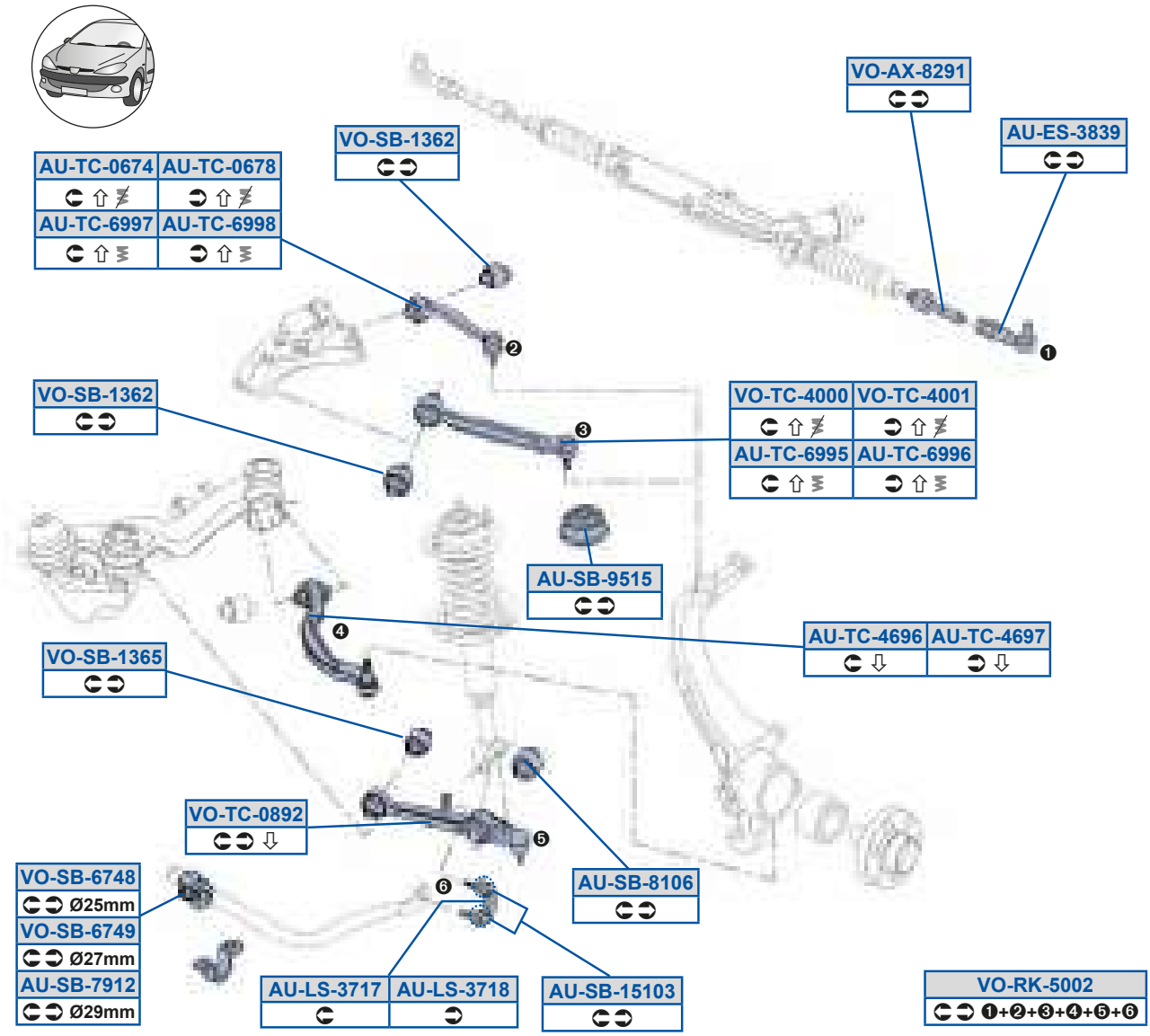
VO-AX-8291
AU-ES-3839
VO-SB-1362
AU-TC-0674
AU-TC-0678
AU-TC-6997
AU-TC-6998
VO-SB-1362
VO-TC-4000
VO-TC-4001
AU-TC-6995
AU-TC-6996
AU-SB-9515
AU-TC-4696
AU-TC-4697
VO-SB-1365
VO-TC-0892
VO-SB-6748
Ø25mm
VO-SB-6749
Ø27mm
AU-SB-7912
Ø29mm
AU-SB-8106
AU-LS-3717
AU-LS-3718
AU-SB-15103
VO-RK-5002
❶+❷+❸+❹+❺+❻

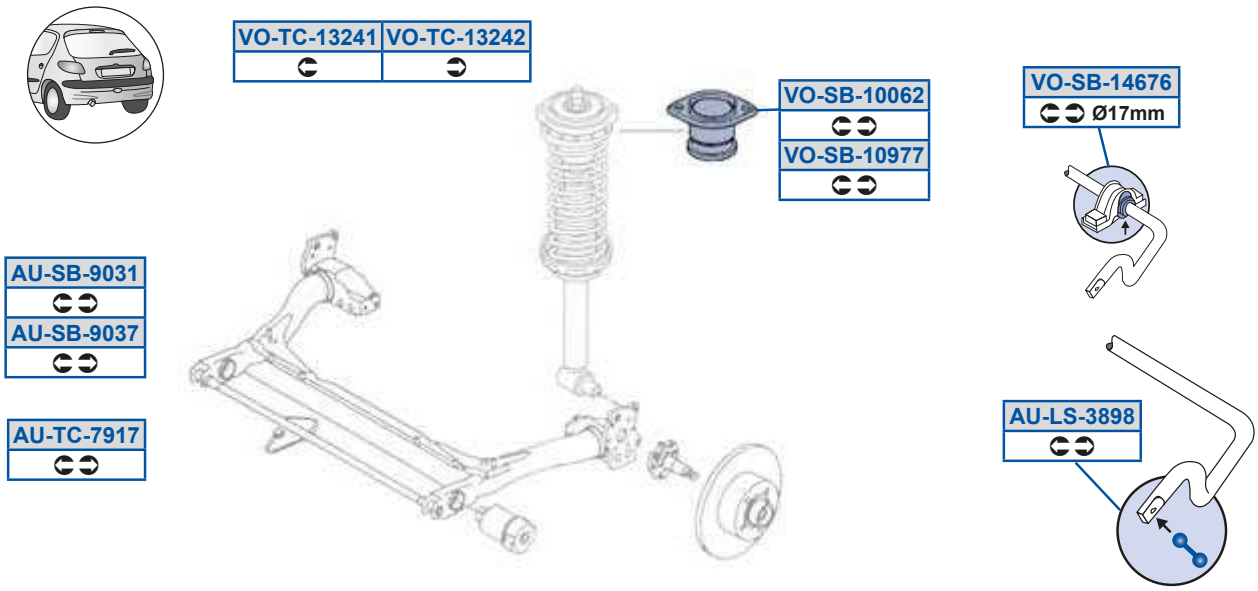
VO-TC-13241
VO-TC-13242
VO-SB-10062
VO-SB-10977
VO-SB-14676
Ø17mm
AU-SB-9031
AU-SB-9037
AU-TC-7917
AU-LS-3898

g_ 5eQ5B889

FR7B7EC7D03FR7B7EC7DP

K150024
⊂⊃ ⊙
K150029
⊂⊃ ⊙ →09/95
K150094
⊂⊃ ⊙ 10/95→

VO-DS-7142	VO-DS-7105
⊂ ⊙ ✗ GTi	⊃ ⊙ ✗ GTi
VO-DS-7137	**VO-DS-7140**
⊂ ⊙ ✗ SX →09/95 TRW	⊃ ⊙ ✗ SX →09/95 TRW
VO-DS-1511	**VO-DS-1512**
⊂ ⊙ ✗ SX 10/95→	⊃ ⊙ ✗ SX 10/95→
VO-DS-7333	**VO-DS-7334**
⊂ ⊙ ✓ SX	⊃ ⊙ ✓ SX

SE-LS-2850
⊂⊃ ⊃ Ø18mm 6KZR040000 - 6KZR555000
VO-LS-1516
⊂⊃ Ø17mm 6KZR555000
VO-LS-6994
⊂⊃ ⊃ Ø20 & 23mm

VO-ES-7139	VO-ES-7106
⊂	⊃

VO-SB-10067
⊂⊃

VO-SB-4861
⊂⊃

VO-SB-6725
⊂⊃ Ø18mm

VO-AX-7107
⊂⊃ ⊙ ✗ GTi
VO-AX-7138
⊂⊃ ⊙ ✗ GTi →09/95 TRW

VO-SB-7958
⊂⊃

VO-SB-1358
⊂⊃

VO-SB-1329
⊂⊃

VO-WP-8210
⊂⊃

VO-BJ-7154
⊂⊃

VO-SB-7418
⊂⊃

VO-SB-10061
⊂⊃

VO-SB-13631
⊂⊃ Ø18mm

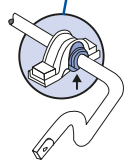

VO-SB-1189
⊂⊃
VO-SB-7978
⊂⊃ Ø71mm
VO-SB-0042
⊂⊃ Ø72mm
VO-SB-4482
⊂⊃ Ø58mm

Y9C88>B
8G8B8GFA8

g_ 5Rd59C9>
DY7B99F7AR3DY7B99F7B

g_ 5Sd5E9AG
8G8B8GF8838G8B8GF89

g_ 5dP59ACF
8G8B7E8F8R38G8B7E8F8S

Y9C88>G
8ECB99FA838G8B99FA8

g_ 5Rd5E98C
8G8B8GF7B38G8B8GF7B0

g_ 5Zd59C9D
8G8B88A8C38G8B88A8CP

g_ 5dP59ADA9
FE8C88B9A

Y9C88GB
8V7B99FA8P3ACEB99FA80

g_ 5Rd5E9AE
8G8B99F7A38G8B99F7A0

g_ 5Zd5DGGB
DY7B88A8C

g_ 5dP5BBF>
Dd7C78CB8R

dS5Zd5>FC8
8G8B88A8C0

g_ 5Rd5E9B8
8G8B99F7B38G8B99F7B0

g_ 5dP588B>
8X7C78CB8Q

g_ 5dP5BFD9
8G8B89A9G

g_ 5Oi 5E98E
8G8B8GF983DY7B99F7A0 /40

g_ 5Rd5E9B>
8G8B8GF7A38G8B8GF7A0

g_ 5dP5988D9
8E8C8AAAA38G8C89AAA

g_ 5dP5DE>C
8G8B88A8B

g_ 5Oi 5E9AF
8G8B99F9803DY7B99F7AP

g_ 5Rd5EAAA
DY7B99F7AP3DY7B99F7AS

g_ 5dP5988DE
8X7B899BG3ACEB899BG

g_ 5dP5EB9F
8G8B7E8G70

g_ 5PX5E9CB
ACEB7EACD03ACEB7EADC

g_ 5Rd5EAAB
DY7B99F7BP3DY7B99F7BS

g_ 5dP599FG
8G8C78CB8

g_ 5dP5EGCF
8G8B88A9G

g_ 5Rd59C99
DY7B99F7A3DY7B99F7A0

g_ 5Sd5E98D
8G8B8GF893A07B99F89

g_ 5dP59A>G
8G8B7E8F93ACEB7E8F9

g_ 5dP5EGEF
DY7C78CB803Dd7C78CB8S

K150024
⊂⊃ ⊙
K150029
⊂⊃ ⊙ →09/95
K150094
⊂⊃ ⊙ 10/95→

VO-DS-7142	VO-DS-7105
⊂ ⊙ ✗ GTi	⊃ ⊙ ✗ GTi
VO-DS-7137	**VO-DS-7140**
⊂ ⊙ ✗ SX →09/95 TRW	⊃ ⊙ ✗ SX →09/95 TRW
VO-DS-1511	**VO-DS-1512**
⊂ ⊙ ✗ SX 10/95→	⊃ ⊙ ✗ SX 10/95→
VO-DS-7333	**VO-DS-7334**
⊂ ⊙ ✓ SX	⊃ ⊙ ✓ SX

SE-LS-2850
⊂⊃ ⊳ Ø18mm 6KZR040000 - 6KZR555000
VO-LS-1516
⊂⊃ Ø17mm 6KZR555000
VO-LS-6994
⊂⊃ ⊳ Ø20 & 23mm

VO-ES-7139	VO-ES-7106
⊂	⊃

VO-SB-10067
⊂⊃

VO-SB-4861
⊂⊃

VO-SB-6725
⊂⊃ Ø18mm

VO-AX-7107
⊂⊃ ⊙ ✗ GTi
VO-AX-7138
⊂⊃ ⊙ ✗ GTi →09/95 TRW

VO-SB-7958
⊂⊃

VO-SB-1358
⊂⊃

VO-SB-1329
⊂⊃

VO-WP-8210
⊂⊃

VO-BJ-7154
⊂⊃

VO-SB-7418
⊂⊃

VO-SB-10061
⊂⊃

VO-SB-13631
⊂⊃ Ø18mm

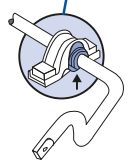

VO-SB-1189
⊂⊃
VO-SB-7978
⊂⊃ Ø71mm
VO-SB-0042
⊂⊃ Ø72mm
VO-SB-4482
⊂⊃ Ø58mm

g_ 5h a5F>98

8G8B7E8C8P38G8B7E8CA0

WWO WODY91	8F7GG 8; 78;		

VO-DS-7105	VO-DS-7142
VO-DS-1511	VO-DS-1512
VO-DS-7333	VO-DS-7334
✓ SX	✓ SX

K150024
✗ 1.0
K150081
✓ 1.0
K150094

VO-ES-7139	VO-ES-7106
VO-ES-7139	VO-ES-7106
→Ch. 6K-1-180000	→Ch. 6K-1-180000
VO-ES-0511	VO-ES-0510
Ch. 6K-1-180001→	Ch. 6K-1-180001→

VO-AX-7107
VO-AX-8275

VO-SB-6725
Ø18mm
VO-SB-6788
Ø19mm

SE-LS-2850
Ø18mm
VO-LS-6994
Ø20 & 23mm

VO-SB-10068
✗ HD, Sport, 1.8 20V turbo

VO-WP-8210

VO-SB-7958

VO-SB-1358

VO-SB-1329

VO-BJ-7154

VO-SB-10061

VO-SB-1189
VO-SB-7978
Ø71mm
VO-SB-0042
Ø72mm
VO-SB-4482
Ø58mm

Y9C88>B
8G8B8GFA8

g_ 5Rd59C9>
DY7B99F7AR3DY7B99F7B

g_ 5Sd5E9AG
8G8B8GF8838G8B8GF89

g_ 5dP5BBF>
Dd7C78CB8R

Y9C88F9
Dd7B8GFA8

g_ 5Rd5E98C
8G8B8GF7B38G8B8GF7B0

g_ 5Zd5DGGB
DY7B88A8C

g_ 5dP5DE>C
8G8B88A8B

Y9C88GB
8V7B99FA8P3ACEB99FA80

g_ 5Rd5E9B>
8G8B8GF7A38G8B8GF7A0

g_ 5dP588B>
8X7C78CB8Q

g_ 5dP5DEFF
8V7B88A8B

dS5Zd5>FC8
8G8B88A8C0

g_ 5Rd5EAAA
DY7B99F7AP3DY7B99F7AS

g_ 5dP5988D9
8E8C8AAAA38G8C89AAA

g_ 5dP5EGCF
8G8B88A9G

g_ 5Oi 5E98E
8G8B8GF983DY7B99F7A0 /40

g_ 5Rd5EAAB
DY7B99F7BP3DY7B99F7BS

g_ 5dP5988DF
Dd7B89AA8S

g_ 5dP5EGEF
DY7C78CB803Dd7C78CB8S

g_ 5Oi 5F>EC
Dd7B99F7A /40

g_ 5Sd58C98
DS7B8GF883DS7B8GF89

g_ 5dP599FG
8G8C78CB8

g_ 5h a5F>98
8G8B7E8C8P38G8B7E8CA0

g_ 5PX5E9CB
ACEB7EACD03ACEB7EADC

g_ 5Sd58C99
DS7B8GF883DS7B8GF89

g_ 5dP59A>G
8G8B7E8F93ACEB7E8F9

g_ 5Rd59C99
DY7B99F7A3DY7B99F7A0

g_ 5Sd5E98D
8G8B8GF893A07B99F89

g_ 5dP59ACF
8G8B7E8F8R38G8B7E8F8S

WPWO Wg ODZ91	8; 78; 9978G		

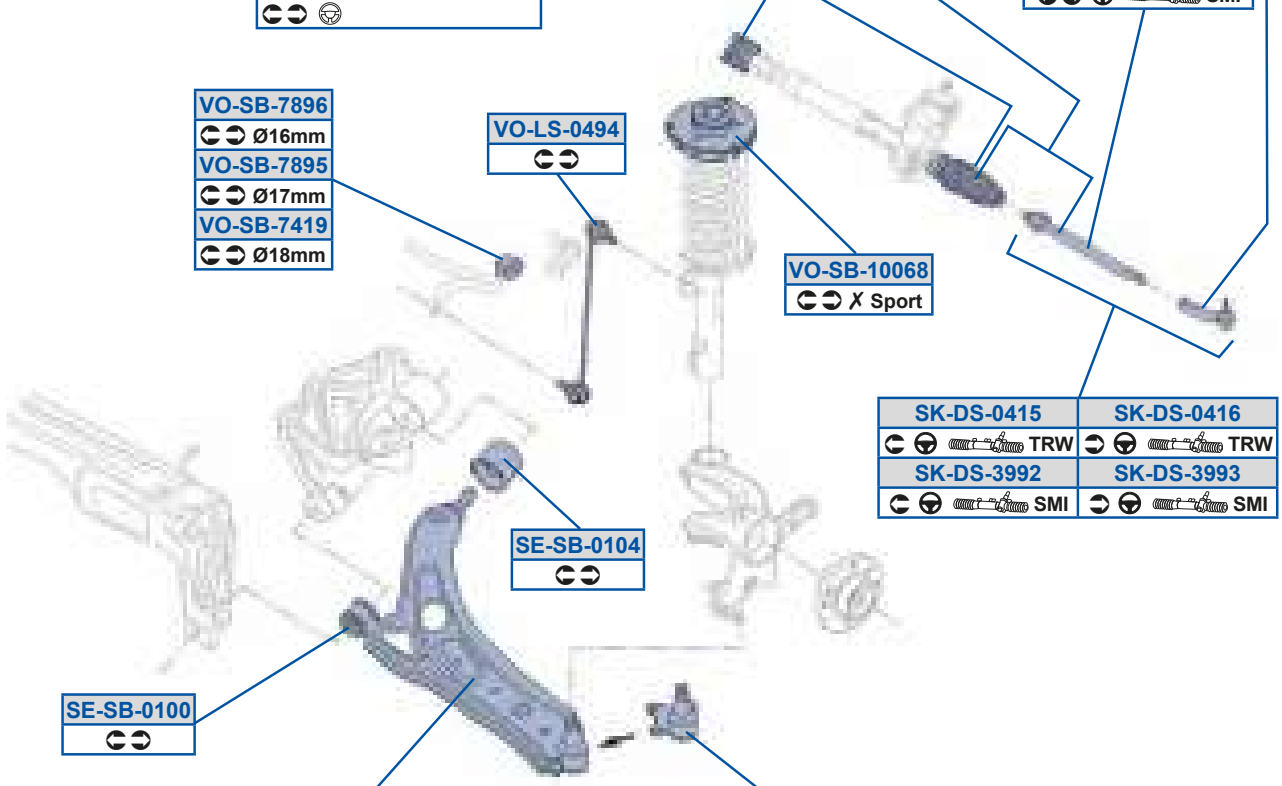

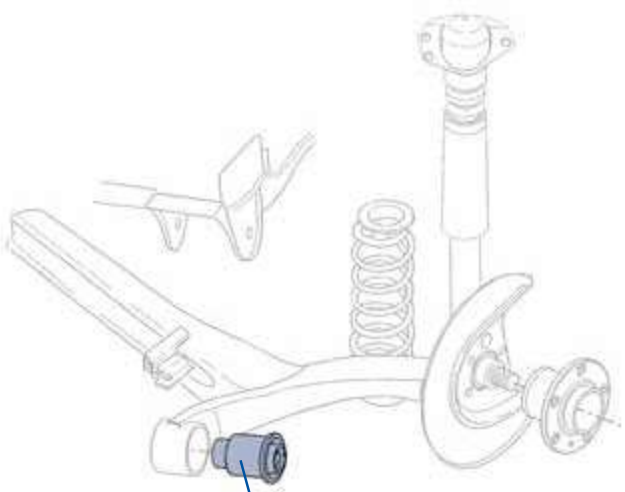

VO-SB-0042	VO-SB-4857
✗ Accessories	✓Accessories

Of 5Sd5AE>9
Cu7B99F88O3DI 7B8GF88Q

dY5PX58B9A
DI 7B7EADC03DI 7B7EADCa

g_ 5Zd58BGB
DI 7B88A8C03DI 7B88A8CP

g_ 5dP5EFGD
DI 7B88A8BX3DI 7B88A8BZ

Of 5Sd5AE>A
DI 7B8GF89Q3DI 7B9AF89

dY5PX58B9B
DI 7B7EADD03DI 7B7EADDa

g_ 5c Y59C8CA
DI 7B9AF7AP /40BDI 7B9AF98P

g_ 5h a5999D
DI 7B7E8C8RZ3DI 7B7E8C8S

Y9C89FE
DS7B8GFA8

dY5Rd58B9C
DI 7B8GF7AP3DI 7B9AF7AP

g_ 5c Y59C8D>
DI 7B9AF7AP /40BDI 7B9AF98P

g_ 5h a59GFG
DI 7B7E8C8Rn3DI 7B7E8C8S

Y9C8>AB
DI 7B9AFA8O

dY5Rd58B9D
DI 7B8GF7BP3DI 7B99F7Bi

g_ 5dP588B>
8X7C78CB8Q

g_ 5h a5FFAE
Dn7B7E8C83Dn7B7E8C8S

Y9C8>AC
DI 7B9AFA8R

dY5Rd5AGG>
DI 7B9AF7AQ3DI 7B9AF7AU

g_ 5dP5988DF
Dd7B89AA8S

g_ 5h a5FFAF
Dn7B7E8C93Dn7B7E8C9S

dS5Oi 588G9
DI 7B9AF7AP /40BDI 7B9AF98P

dY5Rd5AGGA
DI 7B9AF7BQ3DI 7B9AF7BU

g_ 5dP5BFCE
8X7C78CB8R

dS5dP58988
DI 7B7E8F9O

g_ 5Oi 59>CC8
DI 7B9AF87Q

g_ 5dP5EB9G
DI 7B88A8BS3DI 7B88A8Bd

dS5dP5898B
8Y7B7E8FAS3DI 7B7E8FA

g_ 5Oi 5E98E
8G8B8GF983DY7B99F7AO /40

g_ 5dP5EFGC
DI 7B88A8Ba 3DI 7B88A8BI

dSOe

WWO g ODXC4Da91	8A78F	WWO g da_ceQ_f aS ODX94DaC1	8E78F
WWO g de ODXF4DaF1	8A798		

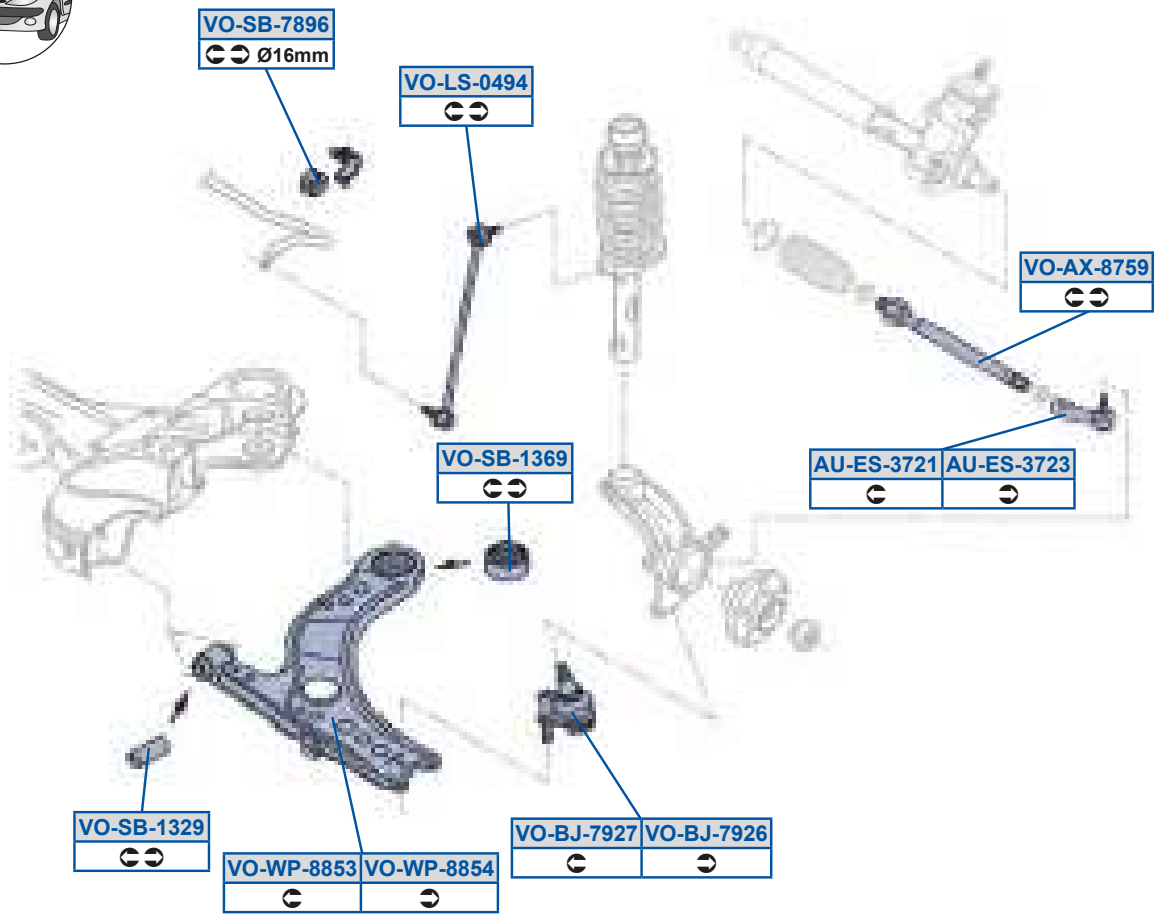

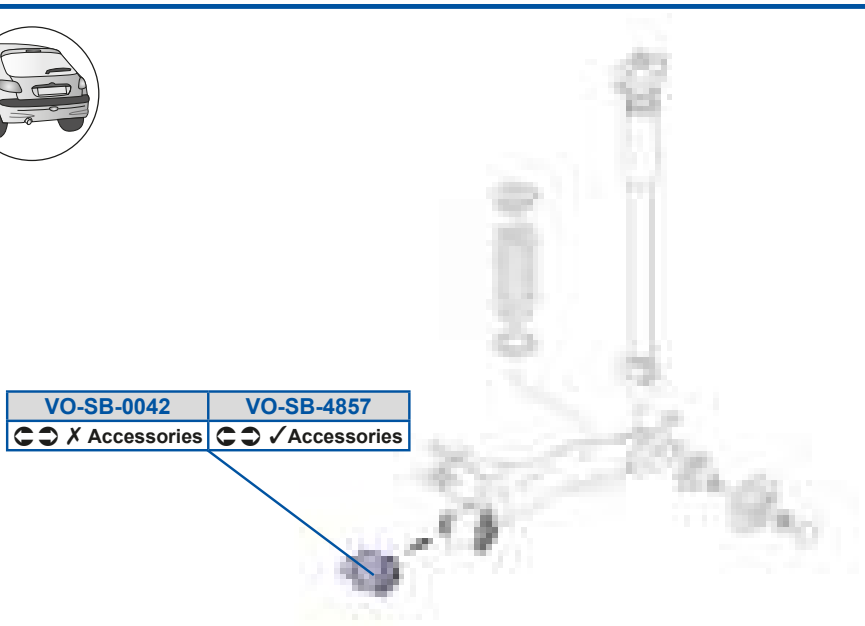

Of 5Sd5AE>9
Cu7B99F88O3DI 7B8GF88Q

Of 5Sd5AE>A
DI 7B8GF89Q3DI 7B9AF89

g_ 5Oi 5FECG
Dn7B9AF7AQ3Dn7B9AF7AR

g_ 5PX5EG>D
Cu7B7EADDO3Dn7B7EADD

g_ 5PX5EG>E
Cu7B7EADCO3Dn7B7EADC

g_ 5Zd58BGB
DI 7B88A8CO3DI 7B88A8CP

g_ 5dP588B>
8X7C78CB8Q

g_ 5dP59A>G
8G8B7E8F93ACEB7E8F9

g_ 5dP59ADG
8X7B7E8F838X7B7E8F80

g_ 5dP5BFCE
8X7C78CB8R

g_ 5dP5EFGD
DI 7B88A8BX3DI 7B88A8BZ

g_ 5h a5FFCA
Dn7B7E8C8O3Dn7B7E8C8P

g_ 5h a5FFCB
Dn7B7E8C9O3Dn7B7E8C9P

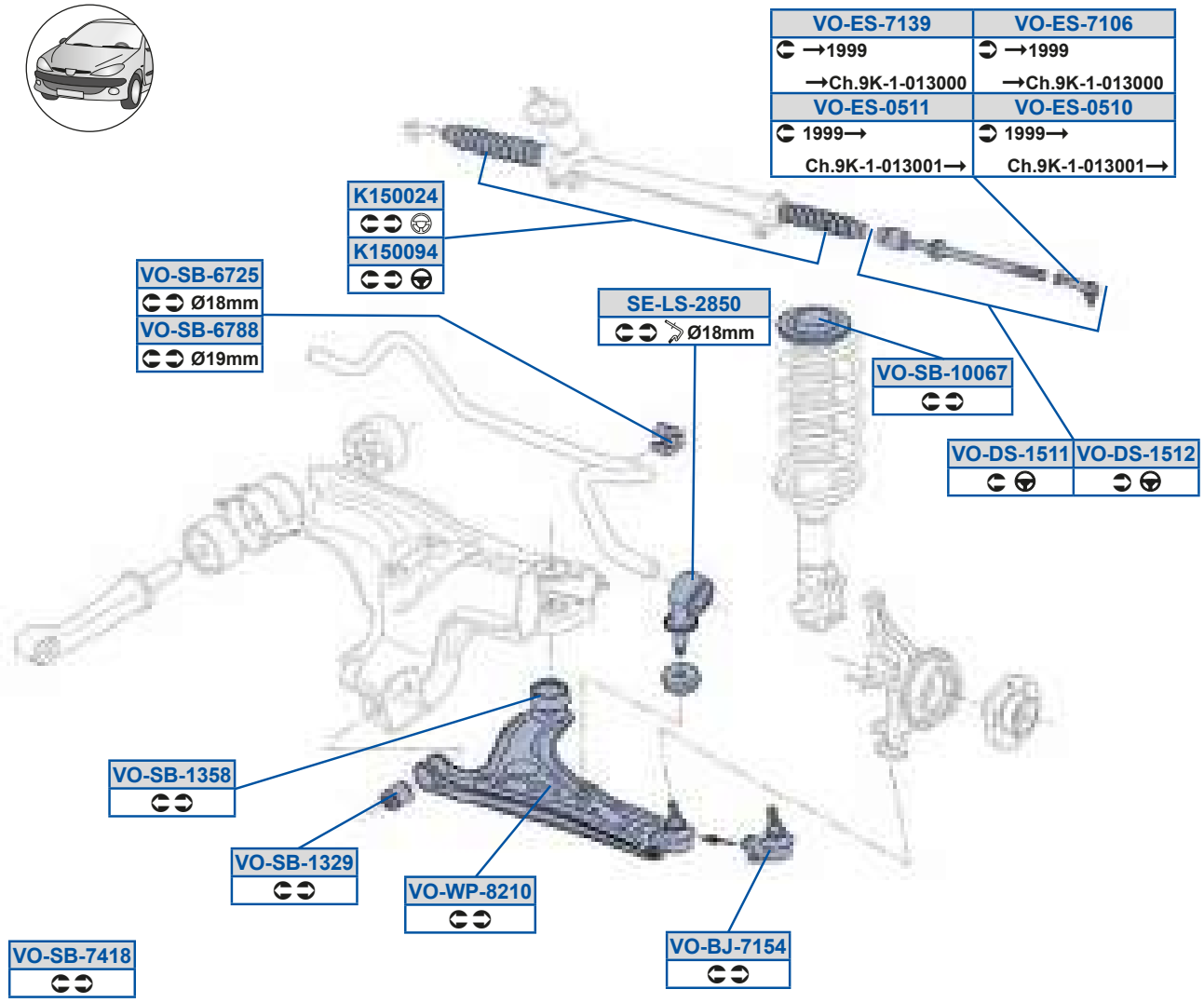
VO-ES-7139
→1999
→Ch.9K-1-013000
VO-ES-7106
→1999
→Ch.9K-1-013000
VO-ES-0511
1999→
Ch.9K-1-013001→
VO-ES-0510
1999→
Ch.9K-1-013001→
K150024
K150094
VO-SB-6725
Ø18mm
VO-SB-6788
Ø19mm
SE-LS-2850
Ø18mm
VO-SB-10067
VO-DS-1511
VO-DS-1512
VO-SB-1358
VO-SB-1329
VO-WP-8210
VO-BJ-7154
VO-SB-7418

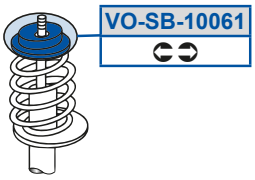
VO-SB-10061

Y9C88>B
8G8B8GFA8

Y9C88GB
8V7B99FA8P3ACEB99FA8O

dS5Zd5>FC8
8G8B88A8CO

g_ 5PX5E9CB
ACEB7EACDO3ACEB7EADC

g_ 5Rd59C99
DY7B99F7A3DY7B99F7AO

g_ 5Rd59C9>
DY7B99F7AR3DY7B99F7B

g_ 5Sd58C98
DS7B8GF883DS7B8GF89

g_ 5Sd58C99
DS7B8GF883DS7B8GF89

g_ 5Sd5E98D
8G8B8GF893AO7B99F89

g_ 5Sd5E9AG
8G8B8GF8838G8B8GF89

g_ 5dP5988D9
8E8C8AAAA38G8C89AAA

g_ 5dP5988DE
8X7B899BG3ACEB899BG

g_ 5dP59A>G
8G8B7E8F93ACEB7E8F9

g_ 5dP59ACF
8G8B7E8F8R38G8B7E8F8S

g_ 5dP5DE>C
8G8B88A8B

g_ 5dP5DEFF
8V7B88A8B

g_ 5dP5EB9F
8G8B7E8G7O

g_ 5h a5F>98
8G8B7E8C8P38G8B7E8CAO

K150182	⊂⊃ ✗ 1.9TDi (Eng ALH)
K150231	⊂⊃ ✓ 1.9TDi (Eng ALH)

VO-ES-1507	⊂ ✗ Cupra
VO-ES-1506	⊃ ✗ Cupra
VO-ES-2405	⊂ ✓ Cupra
VO-ES-2404	⊃ ✓ Cupra

VO-SB-14966	⊂⊃ Ø10mm
VO-SB-14628	⊂⊃ Ø15mm
VO-SB-6818	⊂⊃ Ø17mm
VO-SB-13250	⊂⊃ Ø19mm
AU-SB-4847	⊂⊃ Ø21mm
VO-SB-6796	⊂⊃ Ø23mm

VO-SB-10053	⊂⊃

VO-AX-13741	⊂⊃ ✗ Cupra
AU-AX-6982	⊂⊃ ✓ Cupra

AU-SB-7331	⊂⊃ ✓ Cupra

VO-SB-1369	⊂⊃ ✗ Cupra

VO-RK-15052	⊂⊃ ✗ Cupra, 1.9TDi (Eng ALH)
VO-RK-15061	⊂⊃ ✓ 1.9TDi (Eng ALH)

VO-DS-1549	⊂ ✗ Cupra
VO-DS-1548	⊃ ✗ Cupra

VO-SB-4523	⊂⊃

VO-BJ-8287	⊂ ✗ Cupra
VO-BJ-8288	⊃ ✗ Cupra
VO-BJ-2410	⊂⊃ ✓ Cupra

VO-SB-1329	⊂⊃ ✗ Cupra
AU-SB-7256	⊂⊃ ✓ Cupra

VO-LS-0475	⊂⊃ Fe ↔ 105mm Ø23mm ✗ 4x4
VO-LS-4916	⊂⊃ ✓ P Ø21mm
VO-LS-7327	⊂⊃ ✓ P Ø23mm

VO-WP-1553	⊂ ✗ Cupra
VO-WP-1552	⊃ ✗ Cupra

VO-LS-2406	⊂ Fe ↔ 336mm ✓ 4x4
VO-LS-0456	⊃ Fe ↔ 336mm ✓ 4x4

VO-RK-4853	⊂⊃ ❶+❷+❸+❹ ✗ 4x4

✗ 4x4

VO-SB-10063	⊂⊃

✓ 4x4

VO-SB-10130	⊂⊃

VO-LS-3680	⊂⊃
AU-LS-4193	⊂⊃

VO-SB-10179	⊂⊃

VO-TC-8737	⊂⊃

VO-SB-0042	⊂⊃ ✗ Accessories
VO-SB-4857	⊂⊃ ✓ Accessories

VO-SB-10131	⊂⊃

Of 5Oi 5DGF>
Fd7B99F7ER

Of 5dP5BFBE
8X7B88A8BQ

Of 5dP5E>CD
Fd7B7E8F9O

Of 5dP5EAA9
Dn7B7E8F8P3Fd7B7E8F8P

Y9C89F>
8X7B99FA838X7B99FA8P

Y9C8>A9
8X7B99FA8P

g_ 5Oi 59AEB9
8X7B99F7AP38X7B99F7BP

g_ 5PX5>B98
Fd7B7EADC03Fd7B7EADCP

g_ 5PX5F>FE
8X7B7EADC038X7B7EADCP

g_ 5PX5F>FF
8X7B7EADD038X7B7EADDP

g_ 5Rd59CBF
8X7B99F7BP38X7B99F7BS

g_ 5Rd59CBG
8X7B99F7AP38X7B99F7AS

g_ 5Sd59C8D
8X7B99F89P38X7B99F89S

g_ 5Sd59C8E
8X7B99F88P38X7B99F88S

g_ 5Sd5>B8B
Fd7B99F89O

g_ 5Sd5>B8C
Fd7B99F88O

g_ 5Zd58BCD
8X7B88A8DR

g_ 5Zd58BEC
8X7B88A8C38X7B88A8CP

g_ 5Zd5>B8D
8X7B88A8CR

g_ 5Zd5ADF8
8X7C7CBDDP

g_ 5Zd5BG9D
8X7B88A8C38X7B88A8CP

g_ 5Zd5EA>E
8X7B88A8CV

g_ 5c Y59C8C>
8X7B99F7AP38X7B99F7EP

g_ 5c Y59C8D9
8X7B99F7AP38X7B99F7EP

g_ 5c Y5BFCA

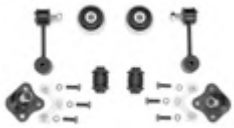

g_ 5dP588B>
8X7C78CB8Q

g_ 5dP5988CA
8V7B89ADC038X7B899BG

g_ 5dP5988DA
8X7C8AACAP38X7C8AACAQ

g_ 5dP5989A8
8X7C7C8BC038X7C7C8BCP

g_ 5dP5989A9
8X7C7C8E8P

g_ 5dP5989EG
8X7C7C97A38X7C7CADCR

g_ 5dP59>CBF
8Y7C7CCCA38Y7C7CCCAO

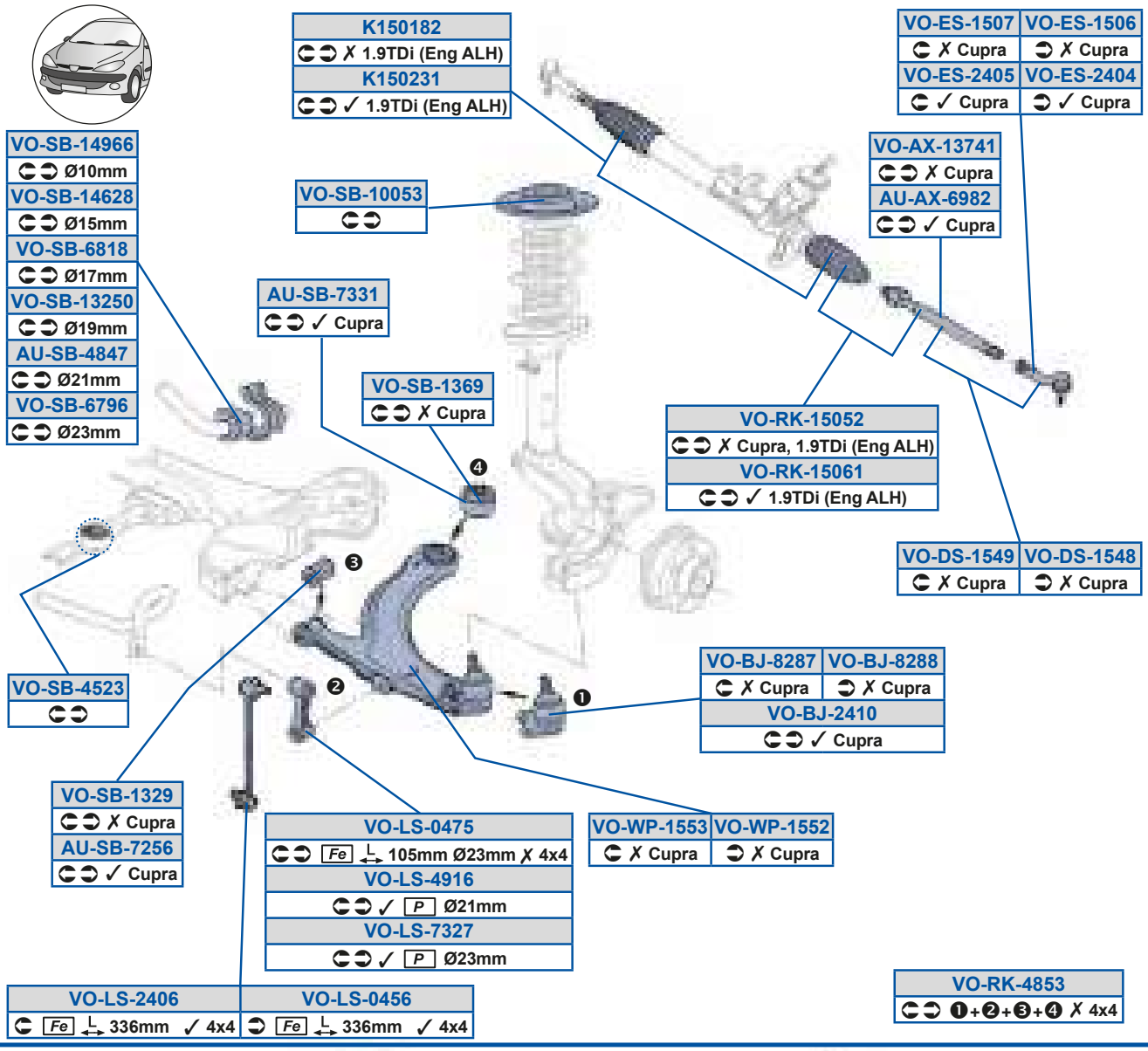
K150182
✗ 1.9TDi (Eng ALH)
K150231
✓ 1.9TDi (Eng ALH)
VO-ES-1507
✗ Cupra
VO-ES-1506
✗ Cupra
VO-ES-2405
✓ Cupra
VO-ES-2404
✓ Cupra
VO-SB-14966
Ø10mm
VO-SB-14628
Ø15mm
VO-SB-6818
Ø17mm
VO-SB-13250
Ø19mm
AU-SB-4847
Ø21mm
VO-SB-6796
Ø23mm
VO-SB-10053
VO-AX-13741
✗ Cupra
AU-AX-6982
✓ Cupra
AU-SB-7331
✓ Cupra
VO-SB-1369
✗ Cupra
VO-RK-15052
✗ Cupra, 1.9TDi (Eng ALH)
VO-RK-15061
✓ 1.9TDi (Eng ALH)
VO-DS-1549
✗ Cupra
VO-DS-1548
✗ Cupra
VO-SB-4523
VO-BJ-8287
✗ Cupra
VO-BJ-8288
✗ Cupra
VO-BJ-2410
✓ Cupra
VO-SB-1329
✗ Cupra
AU-SB-7256
✓ Cupra
VO-LS-0475
Fe 105mm Ø23mm ✗ 4x4
VO-LS-4916
✓ P Ø21mm
VO-LS-7327
✓ P Ø23mm
VO-WP-1553
✗ Cupra
VO-WP-1552
✗ Cupra
VO-LS-2406
Fe 336mm ✓ 4x4
VO-LS-0456
Fe 336mm ✓ 4x4
VO-RK-4853
❶+❷+❸+❹ ✗ 4x4

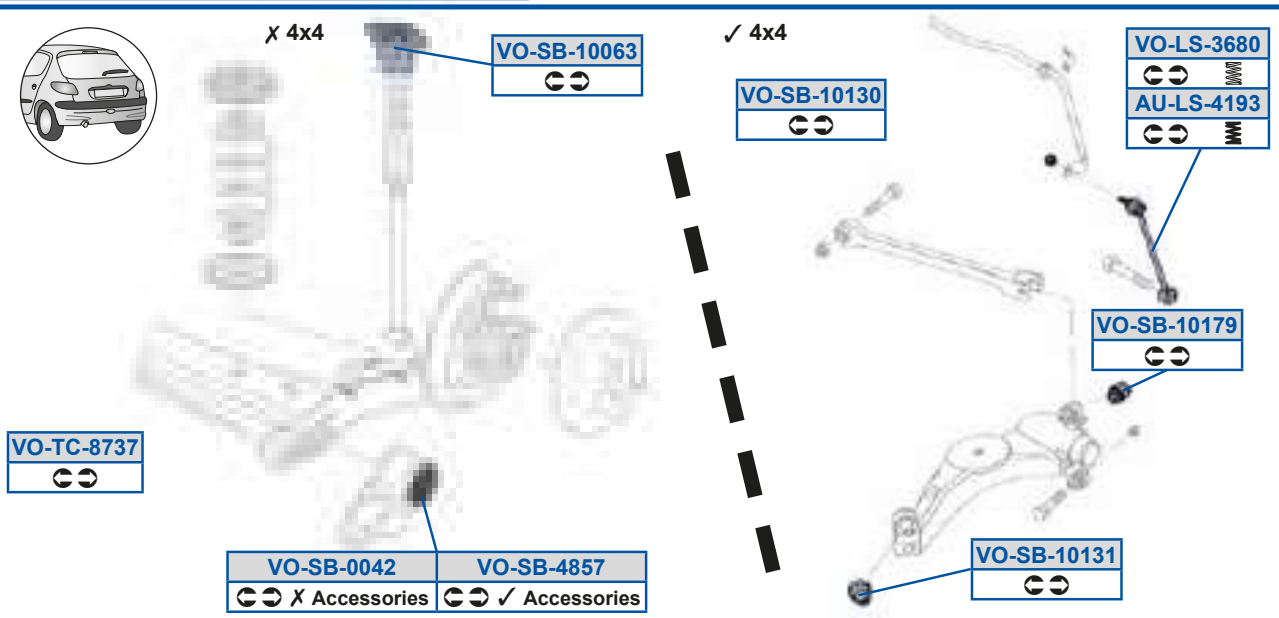
✗ 4x4
VO-SB-10063
✓ 4x4
VO-SB-10130
VO-LS-3680
AU-LS-4193
VO-SB-10179
VO-TC-8737
VO-SB-0042
✗ Accessories
VO-SB-4857
✓ Accessories
VO-SB-10131

g_ 5dP59A>C8
8X7B88A8Bn

g_ 5dP59A>G
8G8B7E8F93ACEB7E8F9

g_ 5dP59ADG
8X7B7E8F838X7B7E8F80

g_ 5dP59BD>F
8X7B88A9E

g_ 5dP59BGDD
FR7C88A9EQ

g_ 5dP5BC>A
8X78GGB9G

g_ 5dP5BFCE
8X7C78CB8R

g_ 5dP5DEGD
8X7B88A8BU38X7B88A8Bt

g_ 5dP5DF9F
8X7B88A8B38X7B88A8Bo

g_ 5eQ5FEAE
8Y7C7CA880038Y7C7CA880P

g_ 5h a59CC>
8X7B7E8C8038X7B7E8C8P

g_ 5h a59CCA
8X7B7E8C8038X7B7E8C8P

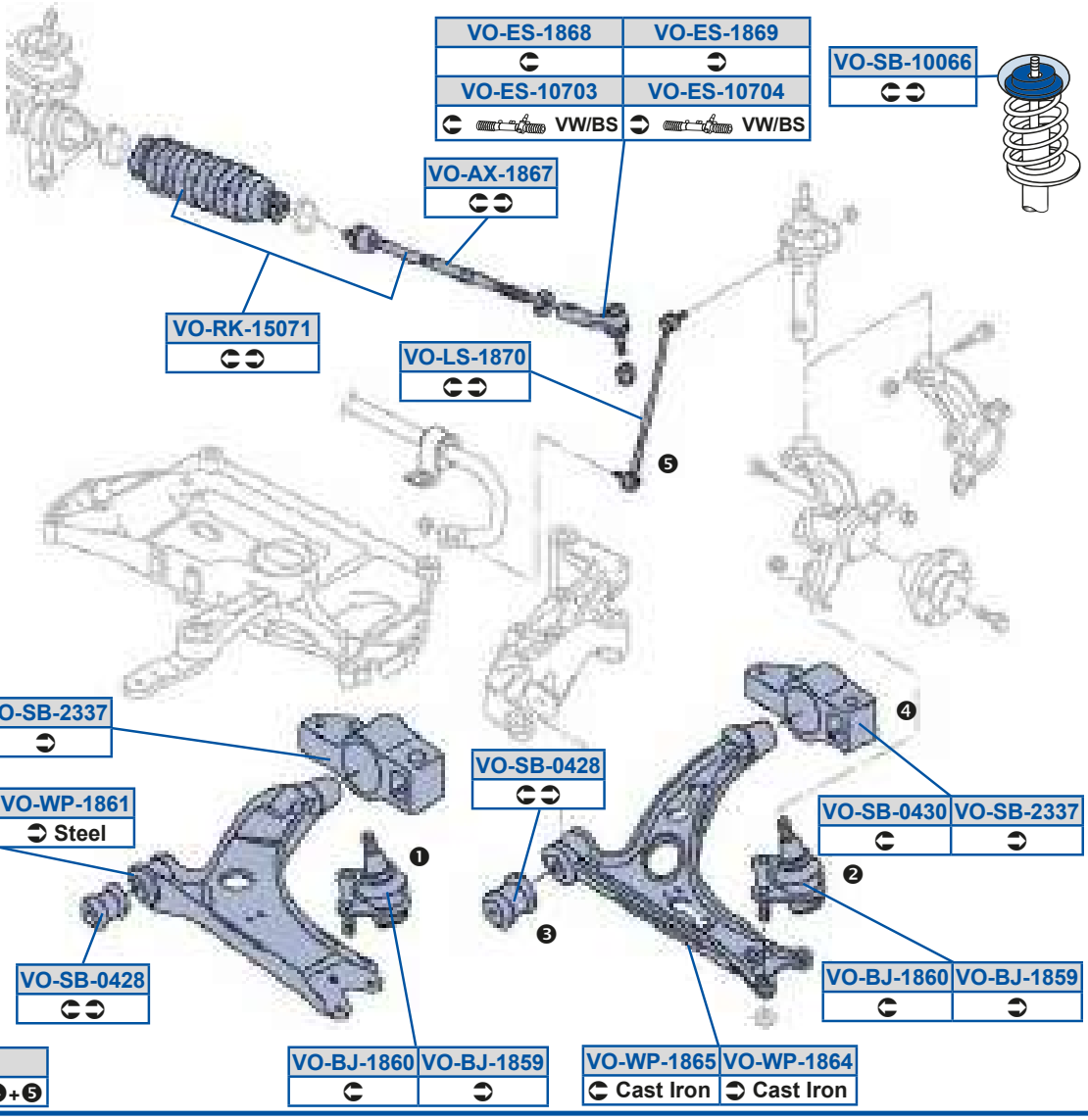
VO-ES-1868
VO-ES-1869
VO-ES-10703
VO-ES-10704
VW/BS
VW/BS
VO-SB-10066
VO-AX-1867
VO-RK-15071
VO-LS-1870
VO-SB-0430
VO-SB-2337
VO-WP-1862
Steel
VO-WP-1861
Steel
VO-SB-0428
VO-SB-0428
VO-SB-0430
VO-SB-2337
VO-BJ-1860
VO-BJ-1859
VO-RK-6606
❶+❷+❸+❹+❺
VO-BJ-1860
VO-BJ-1859
VO-WP-1865
Cast Iron
VO-WP-1864
Cast Iron

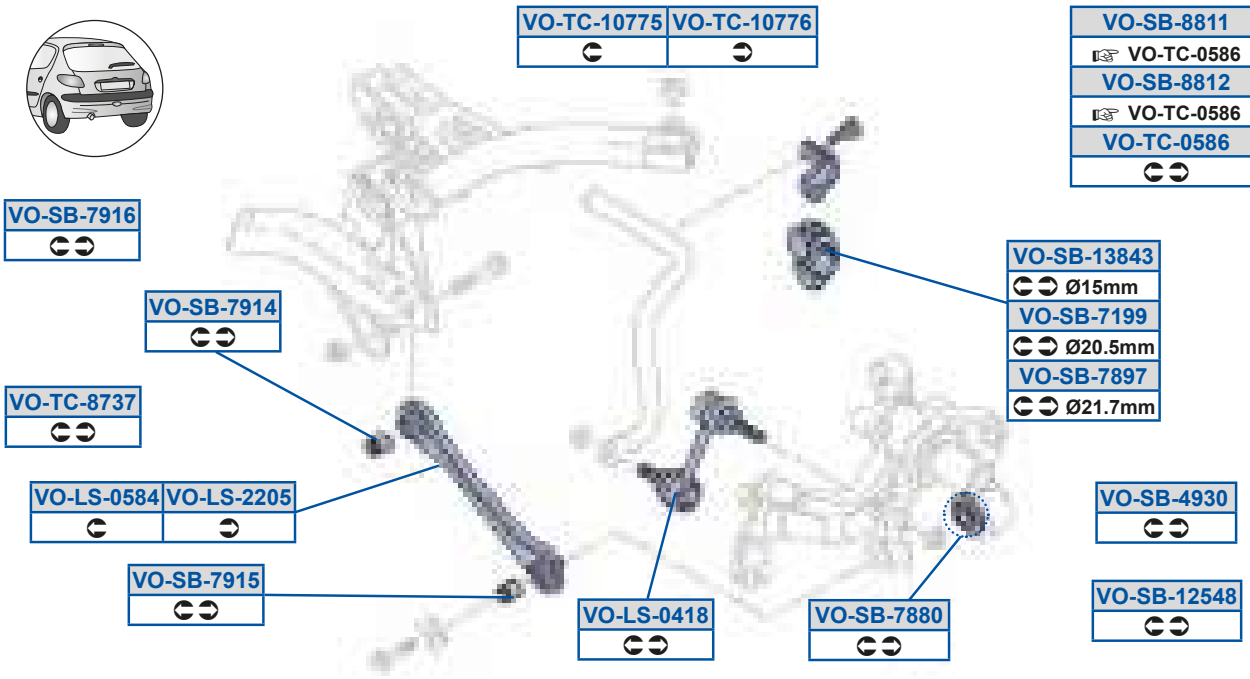
VO-TC-10775
VO-TC-10776
VO-SB-8811
VO-TC-0586
VO-SB-8812
VO-TC-0586
VO-TC-0586
VO-SB-7916
VO-SB-13843
Ø15mm
VO-SB-7199
Ø20.5mm
VO-SB-7897
Ø21.7mm
VO-SB-7914
VO-TC-8737
VO-LS-0584
VO-LS-2205
VO-SB-4930
VO-SB-7915
VO-LS-0418
VO-SB-7880
VO-SB-12548

g_ 5Oi 59FDE
8Y7B9AF87O

g_ 5Zd58CFB
8Y7C78C9GS38Y7C78C9GT

g_ 5dP59>CBF
8Y7C7CCCA38Y7C7CCCAO

g_ 5dP5EG9C
8Y7C7CCBAO

g_ 5PX59FCG
8Y7B7EADDP38Y7B7EADDQ

g_ 5Zd59FE8
8Y7B88A8CP38Y7B88A8CX

g_ 5dP59AFBA
8Y7C88A9EPO

g_ 5dP5EG9D
8Y7C7C8E8Q38Y7C7C8EAQ

g_ 5PX59FD8
8Y7B7EADCP38Y7B7EADCQ

g_ 5Zd5>>8C
8Y7C78CA7P38Y7C78CA7Q

g_ 5dP5>AAE
8Y78GG9A9U38Y78GG9A9X

g_ 5dP5FF99
8Y7C7C9EGO

g_ 5Sd598E8A
8Y7B9AF88Q38Y7B9AF88R

g_ 5cY59C8E9
8Y7B9AF87O

g_ 5dP5BGA8
8Y7C7CCB8Q38Y7C7CCB8R

g_ 5dP5FF9>
8Y7C7C97AO

g_ 5Sd598E8B
8Y7B9AF89Q38Y7B9AF89R

g_ 5cY5DD8D

g_ 5dP5E9GG
8Y7C88A9EOn

g_ 5eQ58CFD
8Y7C7CA9AV38Y7C7CA9Ad

g_ 5Sd59FDF
8Y7B9AF88O38Y7B9AF88P

g_ 5dP58B>F
8Y7B7E8F938Y7B7E8F9O

g_ 5dP5EFF8
8Y7C7CCCA38Y7C7CCCAO

g_ 5eQ598EEC
8Y7C7C99AS38Y7C7C99AV

g_ 5Sd59FDG
8Y7B9AF89O38Y7B9AF89P

g_ 5dP58BA8
8Y78GG9A8U38Y78GG9A8X

g_ 5dP5EFGE
8Y7C88A9EOo

g_ 5eQ598EED
8Y7C7C99BS38Y7C7C99BV

g_ 5Zd58B9F
8Y7C7CBDCO038Y7C7CBDCQ

g_ 5dP5988DD
Dd7B899BGQ

g_ 5dP5EG9B
8Y7C78CB8Q

g_ 5eQ5FEAE
8Y7C7CA88O038Y7C7CA88OP

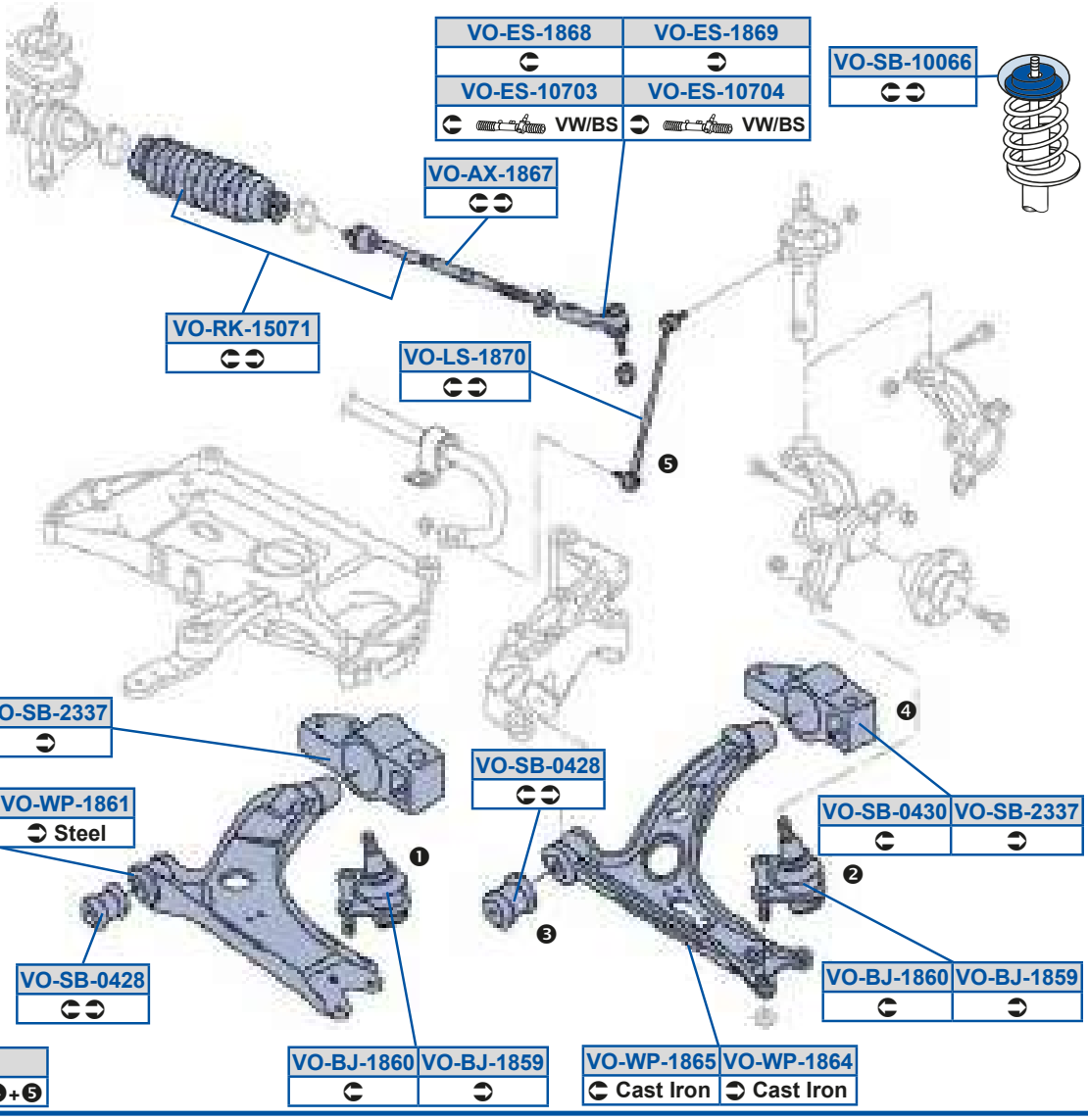
VO-ES-1868
VO-ES-1869
VO-ES-10703
VO-ES-10704
VW/BS
VW/BS
VO-SB-10066
VO-AX-1867
VO-RK-15071
VO-LS-1870
VO-SB-0430
VO-SB-2337
VO-WP-1862
Steel
VO-WP-1861
Steel
VO-SB-0428
VO-SB-0428
VO-SB-0430
VO-SB-2337
VO-BJ-1860
VO-BJ-1859
VO-RK-6606
❶+❷+❸+❹+❺
VO-BJ-1860
VO-BJ-1859
VO-WP-1865
Cast Iron
VO-WP-1864
Cast Iron

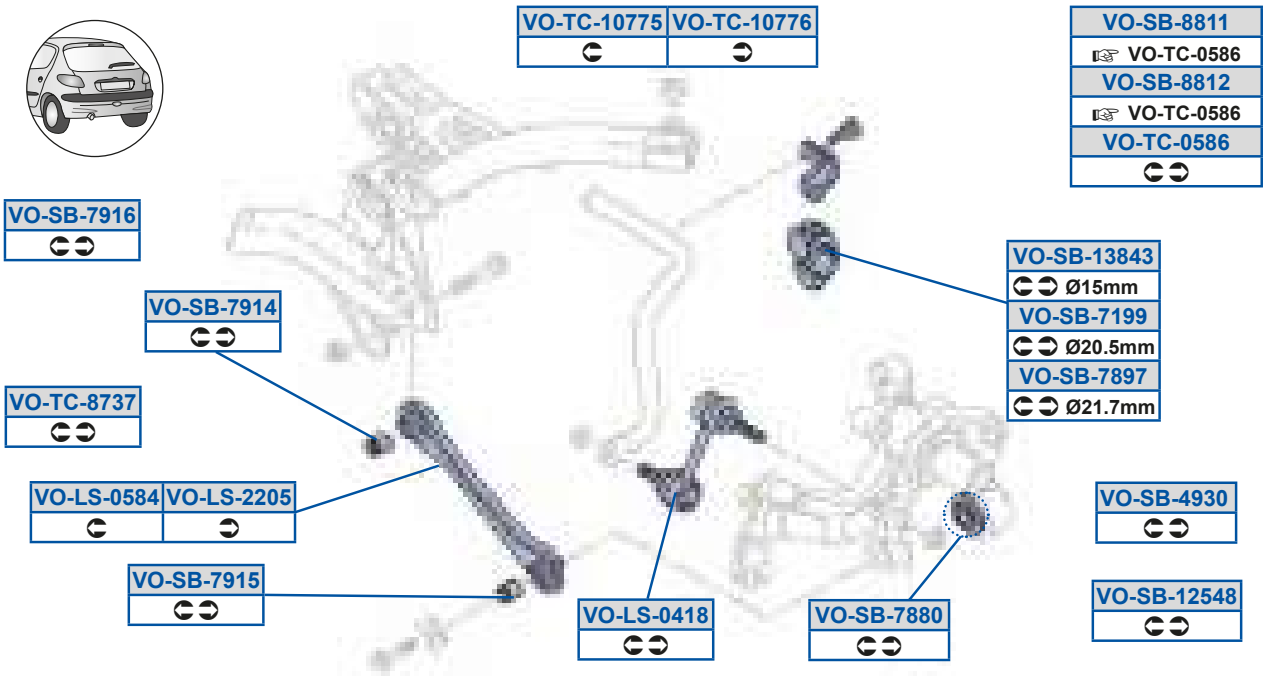
VO-TC-10775
VO-TC-10776
VO-SB-8811
VO-TC-0586
VO-SB-8812
VO-TC-0586
VO-TC-0586
VO-SB-7916
VO-SB-13843
Ø15mm
VO-SB-7199
Ø20.5mm
VO-SB-7897
Ø21.7mm
VO-SB-7914
VO-TC-8737
VO-LS-0584
VO-LS-2205
VO-SB-4930
VO-SB-7915
VO-LS-0418
VO-SB-7880
VO-SB-12548

g_ 5h a59FD9

8Y7B7E8C90O38Y7B7E8C90P

g_ 5h a59FD>

8Y7B7E8C80O38Y7B7E8C80P

g_ 5h a59FDB

8Y7B7E8C90Q38Y7B7E8C90R

g_ 5h a59FDC

8Y7B7E8C80Q38Y7B7E8C80R

dSOe

ZS_] 0CT91	8G79;	ZS_] dQ 0CTC1	8979A
ZS_] de 0CTF1	8F79A		

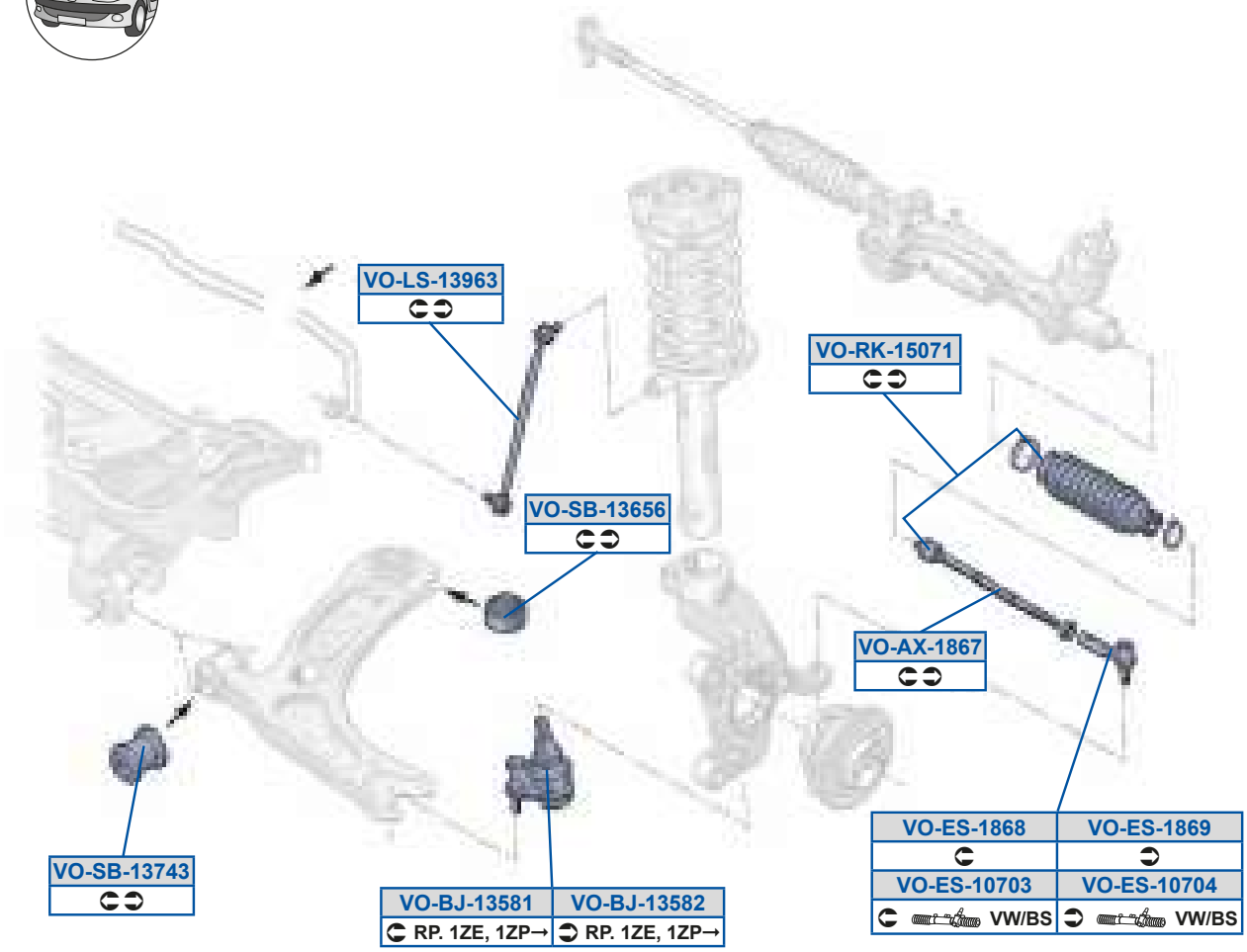

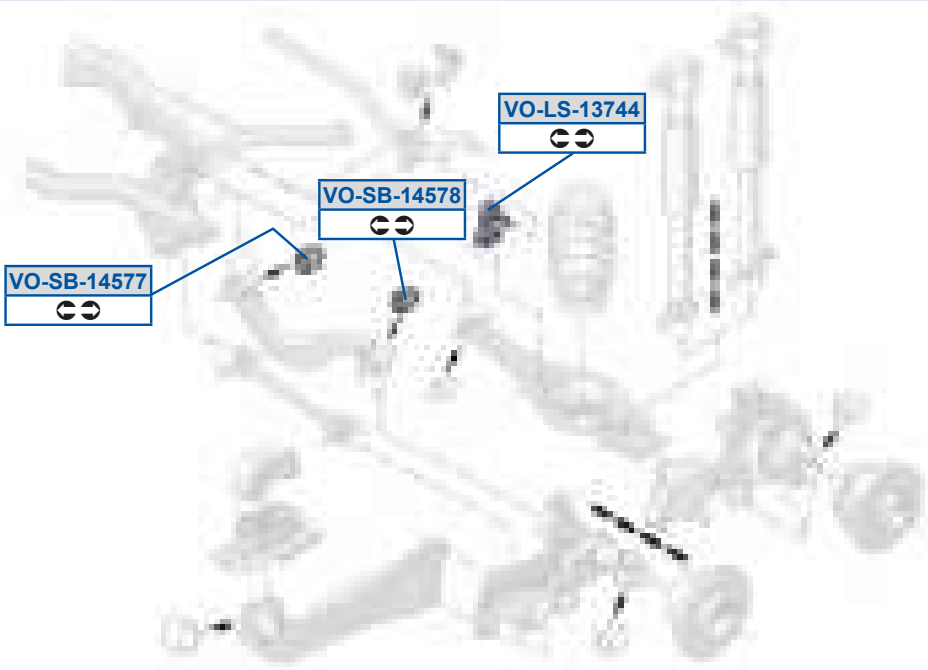

g_ 5Oi 59FDE
8Y7B9AF87O

g_ 5PX59ACF9
CI 7B7EADCO

g_ 5PX59ACF>
CI 7B7EADDO

g_ 5Sd598E8A
8Y7B9AF88Q38Y7B9AF88R

g_ 5Sd598E8B
8Y7B9AF89Q38Y7B9AF89R

g_ 5Sd59FDF
8Y7B9AF88O38Y7B9AF88P

g_ 5Sd59FDG
8Y7B9AF89O38Y7B9AF89P

g_ 5Zd59AEBB
CI 7C7CBDCQ

g_ 5Zd59AGDA
CI 7B88A8CP

g_ 5cY59C8E9
8Y7B9AF87O

g_ 5dP59ADCD
CI 7B7E8F9T3CI 7B7E8FAS

g_ 5dP59AEBA
CI 7B7E8F93CI 7B7E8F9O

g_ 5dP59BCEE
CI 7 C78 C9G P /4O

g_ 5dP59BCEF
CI 7C78C9GQ /4O3CI 7C7CCBAP

[éé0YT91	98799		

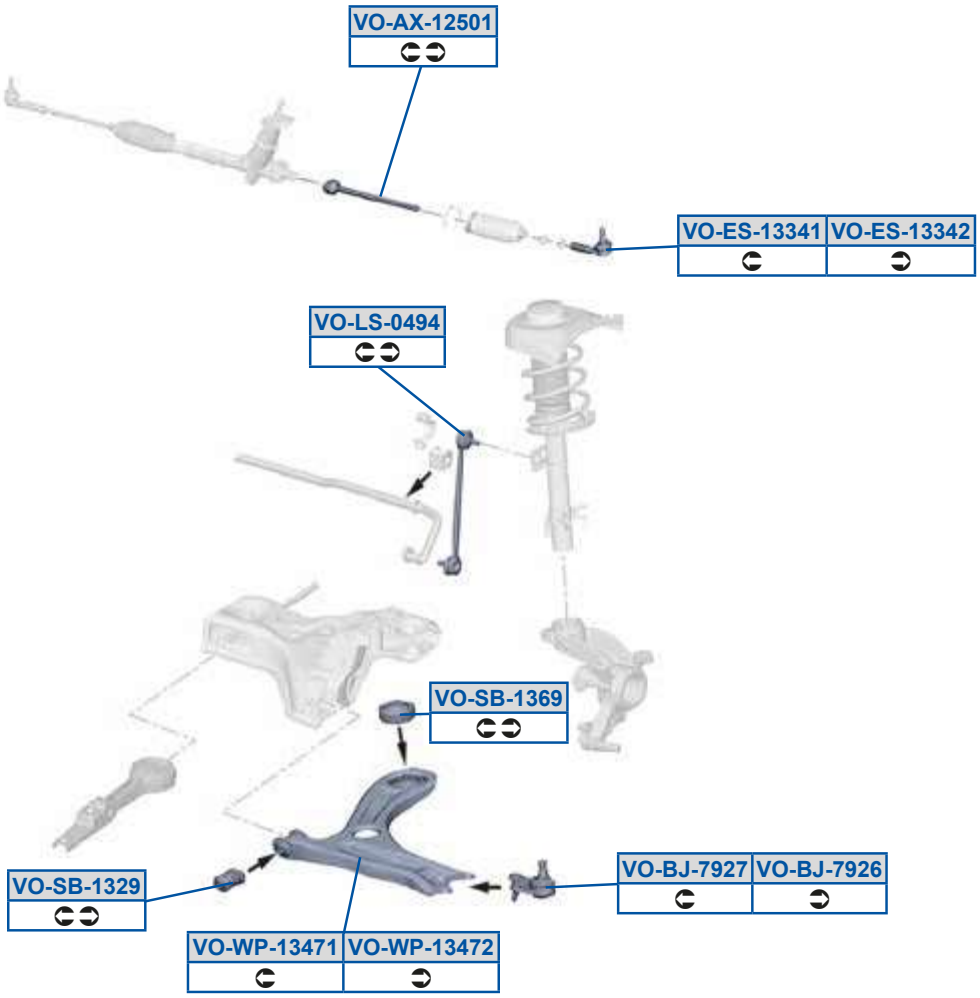

MOOG

g_ 5Oi 59>C89
8o7B9AF87O

g_ 5h a59ABE9
8o7B7E8C8

g_ 5PX5EG>D
Cu7B7EADDO3Dn7B7EADD

g_ 5h a59ABE>
8o7B7E8C9

g_ 5PX5EG>E
Cu7B7EADCO3Dn7B7EADC

g_ 5Sd59AAB9
8o7B9AF88O

g_ 5Sd59AAB>
8o7B9AF89O

g_ 5Zd58BGB
DI 7B88A8CO3DI 7B88A8CP

g_ 5dP59A>G
8G8B7E8F93ACEB7E8F9

g_ 5dP59ADG
8X7B7E8F838X7B7E8F8O

K150182
✗ 1.9TDi (Eng ARL), 2.3i (Eng AQN)
K150231
✓1.9TDi (Eng ARL), 2.3i (Eng AQN)

VO-SB-14966
Ø10mm
VO-SB-14628
Ø15mm
VO-SB-6818
Ø17mm
VO-SB-13250
Ø19mm
VO-SB-7422
Ø20mm
AU-SB-4847
Ø21mm
VO-SB-6796
Ø23mm

VO-SB-10053

VO-SB-1369

VO-ES-1507	VO-ES-1506

VO-AX-13741

VO-DS-1549	VO-DS-1548

VO-RK-15052
✗ 1.9TDi (Eng ARL), 2.3i (Eng AQN)
VO-RK-15061
✓1.9TDi (Eng ARL), 2.3i (Eng AQN)

VO-SB-1329

VO-LS-0475
Fe 105mm Ø23mm
VO-LS-4916
✓ P Ø21mm
VO-LS-7327
✓ P Ø23mm

VO-BJ-8287	VO-BJ-8288

VO-WP-1553	VO-WP-1552

VO-RK-4853
❶+❷+❸+❹

VO-SB-10063

VO-SB-0042	VO-SB-4857
✗ Accessories	✓ Accessories

Of 5dP5BFBE
8X7B88A8BQ

g_ 5Sd59C8D
8X7B99F89P38X7B99F89S

g_ 5dP588B>
8X7C78CB8Q

g_ 5dP5BFCE
8X7C78CB8R

Y9C89F>
8X7B99FA838X7B99FA8P

g_ 5Sd59C8E
8X7B99F88P38X7B99F88S

g_ 5dP5988CA
8V7B89ADC038X7B899BG

g_ 5dP5DE>C
8G8B88A8B

Y9C8>A9
8X7B99FA8P

g_ 5Zd58BEC
8X7B88A8C38X7B88A8CP

g_ 5dP5988DA
8X7C8AACAP38X7C8AACAQ

g_ 5dP5DEGD
8X7B88A8BU38X7B88A8Bt

g_ 5Oi 59AEB9
8X7B99F7AP38X7B99F7BP

g_ 5Zd5BG9D
8X7B88A8C38X7B88A8CP

g_ 5dP59A>C8
8X7B88A8Bn

g_ 5dP5DF9F
8X7B88A8B38X7B88A8Bo

g_ 5PX5F>FE
8X7B7EADC038X7B7EADCP

g_ 5Zd5EA>E
8X7B88A8CV

g_ 5dP59A>G
8G8B7E8F93ACEB7E8F9

g_ 5h a59CC>
8X7B7E8C8038X7B7E8C8P

g_ 5PX5F>FF
8X7B7EADD038X7B7EADDP

g_ 5c Y59C8C>
8X7B99F7AP38X7B99F7EP

g_ 5dP59ADG
8X7B7E8F838X7B7E8F80

g_ 5h a59CCA
8X7B7E8C8038X7B7E8C8P

g_ 5Rd59CBF
8X7B99F7BP38X7B99F7BS

g_ 5c Y59C8D9
8X7B99F7AP38X7B99F7EP

g_ 5dP59BD>F
8X7B88A9E

g_ 5Rd59CBG
8X7B99F7AP38X7B99F7AS

g_ 5c Y5BFCA

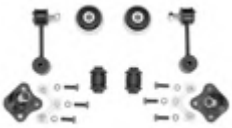

g_ 5dP59BGDD
FR7C88A9EQ

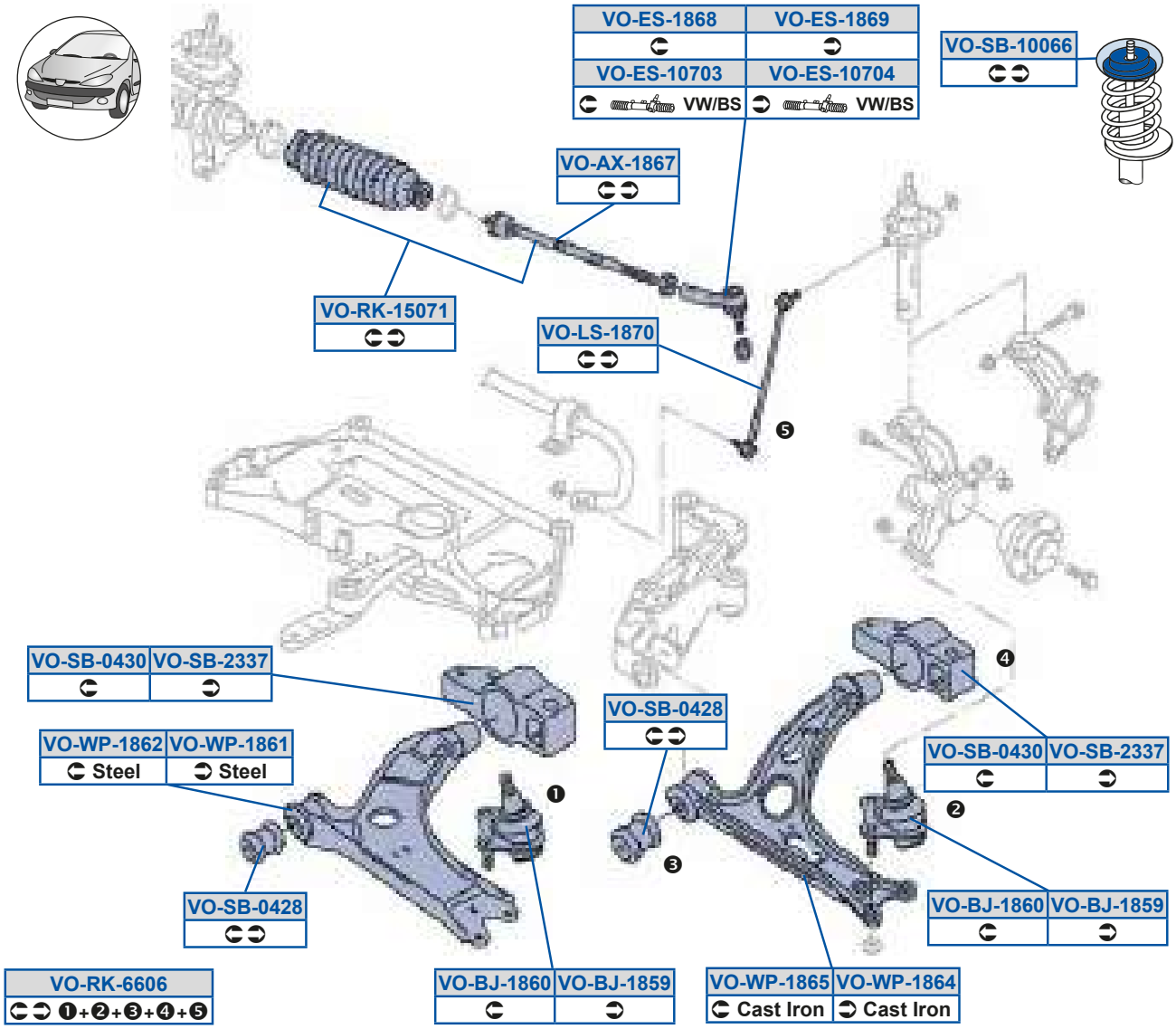
VO-ES-1868
VO-ES-1869
VO-ES-10703
VO-ES-10704
VW/BS
VW/BS
VO-SB-10066
VO-AX-1867
VO-RK-15071
VO-LS-1870
VO-SB-0430
VO-SB-2337
VO-WP-1862
VO-WP-1861
Steel
Steel
VO-SB-0428
VO-SB-0428
VO-SB-0430
VO-SB-2337
VO-BJ-1860
VO-BJ-1859
VO-RK-6606
1+2+3+4+5
VO-BJ-1860
VO-BJ-1859
VO-WP-1865
VO-WP-1864
Cast Iron
Cast Iron

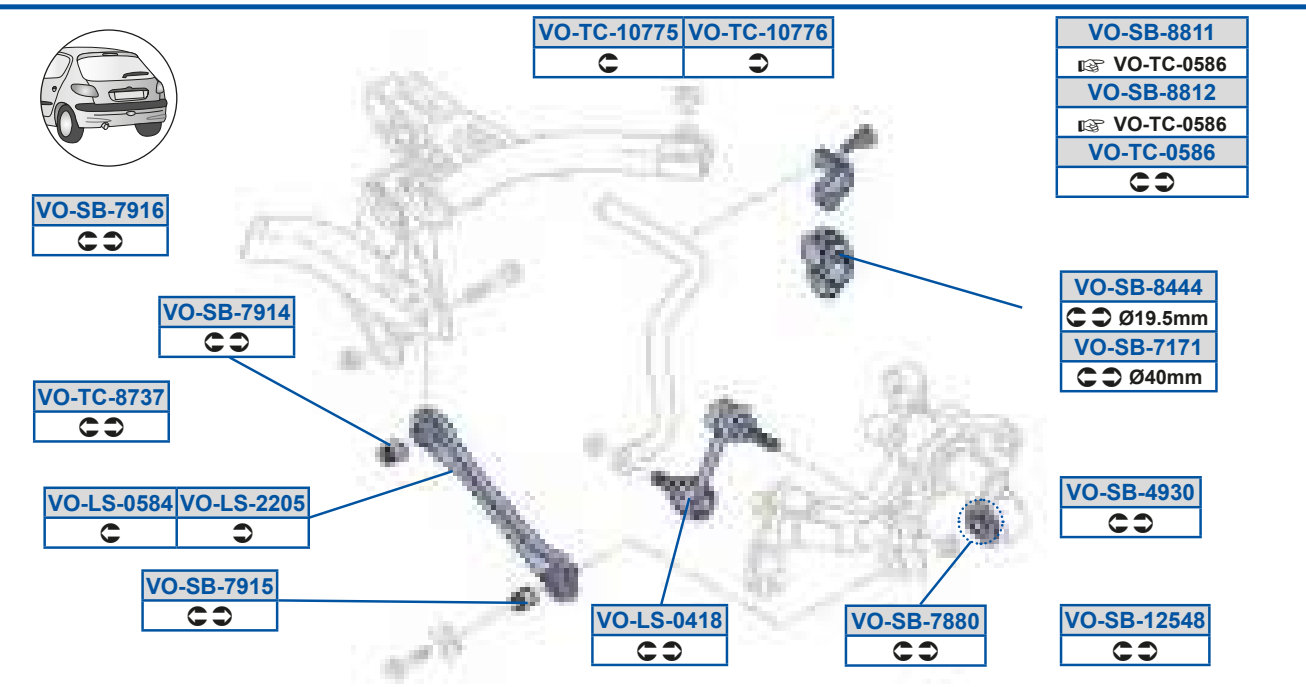
VO-TC-10775
VO-TC-10776
VO-SB-8811
VO-TC-0586
VO-SB-8812
VO-TC-0586
VO-TC-0586
VO-SB-7916
VO-SB-8444
Ø19.5mm
VO-SB-7171
Ø40mm
VO-SB-7914
VO-TC-8737
VO-LS-0584
VO-LS-2205
VO-SB-4930
VO-SB-7915
VO-LS-0418
VO-SB-7880
VO-SB-12548

g_ 5Oi 59FDE
8Y7B9AF87O

g_ 5Zd58CFB
8Y7C78C9GS38Y7C78C9GT

g_ 5dP59>CBF
8Y7C7CCCA38Y7C7CCCAO

g_ 5dP5FBBB
8Y7C88A9EOI

g_ 5PX59FCG
8Y7B7EADDP38Y7B7EADDQ

g_ 5Zd59FE8
8Y7B88A8CP38Y7B88A8CX

g_ 5dP5>AAE
8Y78GG9A9U38Y78GG9A9X

g_ 5dP5FF99
8Y7C7C9EGO

g_ 5PX59FD8
8Y7B7EADCP38Y7B7EADCQ

g_ 5Zd5>>8C
8Y7C78CA7P38Y7C78CA7Q

g_ 5dP5BGA8
8Y7C7CCB8Q38Y7C7CCB8R

g_ 5dP5FF9>
8Y7C7C97AO

g_ 5Sd598E8A
8Y7B9AF88Q38Y7B9AF88R

g_ 5cY59C8E9
8Y7B9AF87O

g_ 5dP5E9E9
8Y7C88BAGS

g_ 5eQ58CFD
8Y7C7CA9AV38Y7C7CA9Ad

g_ 5Sd598E8B
8Y7B9AF89Q38Y7B9AF89R

g_ 5cY5DD8D

g_ 5dP5EFF8
8Y7C7CCCA38Y7C7CCCAO

g_ 5eQ598EEC
8Y7C7C99AS38Y7C7C99AV

g_ 5Sd59FDF
8Y7B9AF88O38Y7B9AF88P

g_ 5dP58B>F
8Y7B7E8F938Y7B7E8F9O

g_ 5dP5EG9B
8Y7C78CB8Q

g_ 5eQ598EED
8Y7C7C99BS38Y7C7C99BV

g_ 5Sd59FDG
8Y7B9AF89O38Y7B9AF89P

g_ 5dP58BA8
8Y78GG9A8U38Y78GG9A8X

g_ 5dP5EG9C
8Y7C7CCBAO

g_ 5eQ5FEAE
8Y7C7CA88OO38Y7C7CA88OP

g_ 5Zd58B9F
8Y7C7CBDCOO38Y7C7CBDCQ

g_ 5dP5988DD
Dd7B899BGQ

g_ 5dP5EG9D
8Y7C7C8E8Q38Y7C7C8EAQ

g_ 5h a59FD9
8Y7B7E8C9OO38Y7B7E8C9OP

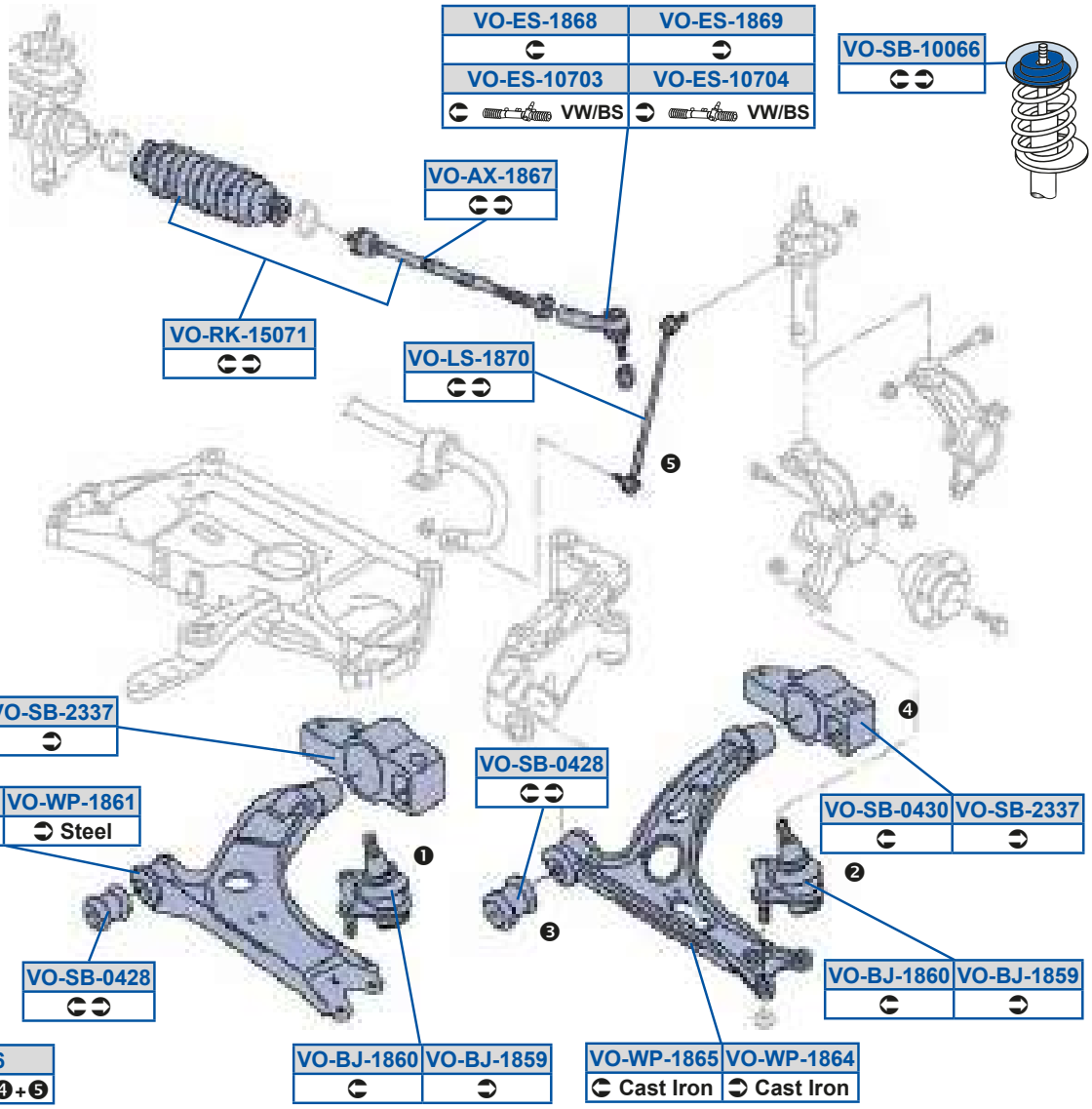
VO-ES-1868
VO-ES-1869
VO-ES-10703 VW/BS
VO-ES-10704 VW/BS
VO-SB-10066
VO-AX-1867
VO-RK-15071
VO-LS-1870
VO-SB-0430 VO-SB-2337
VO-WP-1862 Steel
VO-WP-1861 Steel
VO-SB-0428
VO-SB-0430 VO-SB-2337
VO-BJ-1860 VO-BJ-1859
VO-SB-0428
VO-RK-6606 ❶+❷+❸+❹+❺
VO-BJ-1860 VO-BJ-1859
VO-WP-1865 Cast Iron
VO-WP-1864 Cast Iron

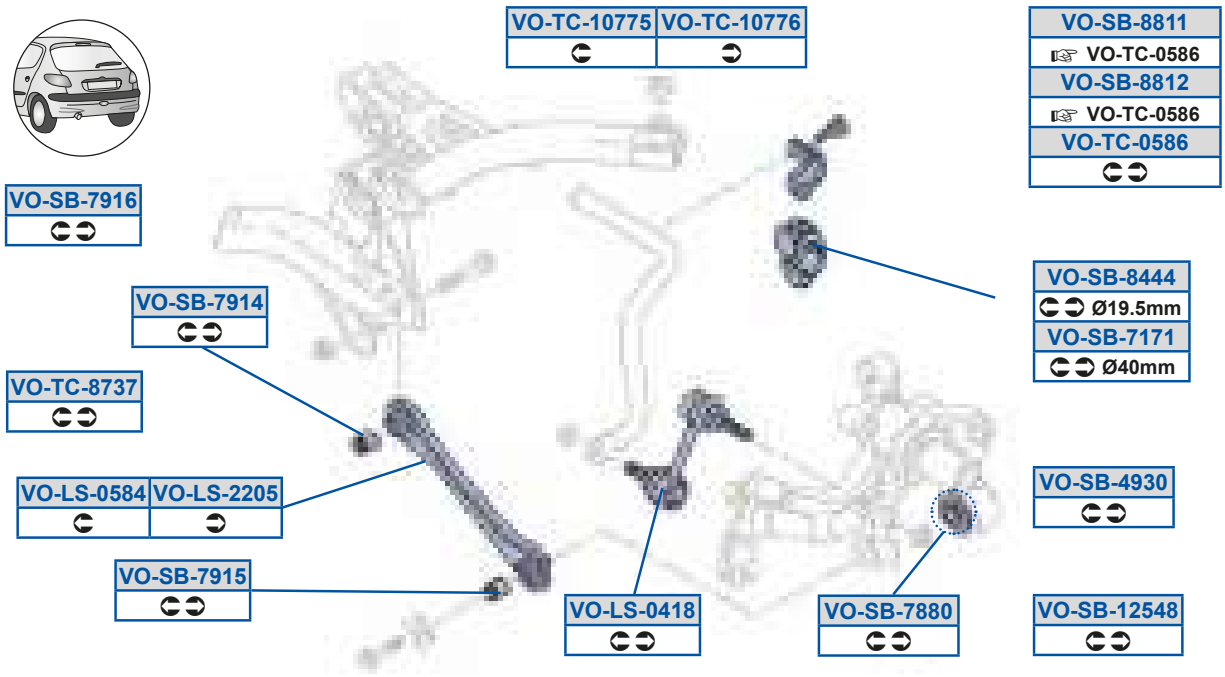
VO-TC-10775 VO-TC-10776
VO-SB-8811
VO-TC-0586
VO-SB-8812
VO-TC-0586
VO-TC-0586
VO-SB-7916
VO-SB-8444 Ø19.5mm
VO-SB-7171 Ø40mm
VO-SB-7914
VO-TC-8737
VO-LS-0584 VO-LS-2205
VO-SB-4930
VO-SB-7915
VO-LS-0418
VO-SB-7880
VO-SB-12548

MOOG

g_ 5h a59FD>

8Y7B7E8C80O38Y7B7E8C80P

g_ 5h a59FDB

8Y7B7E8C90Q38Y7B7E8C90R

g_ 5h a59FDC

8Y7B7E8C80Q38Y7B7E8C80R

e_ZSR_ WJ OYUA1	8E79;		

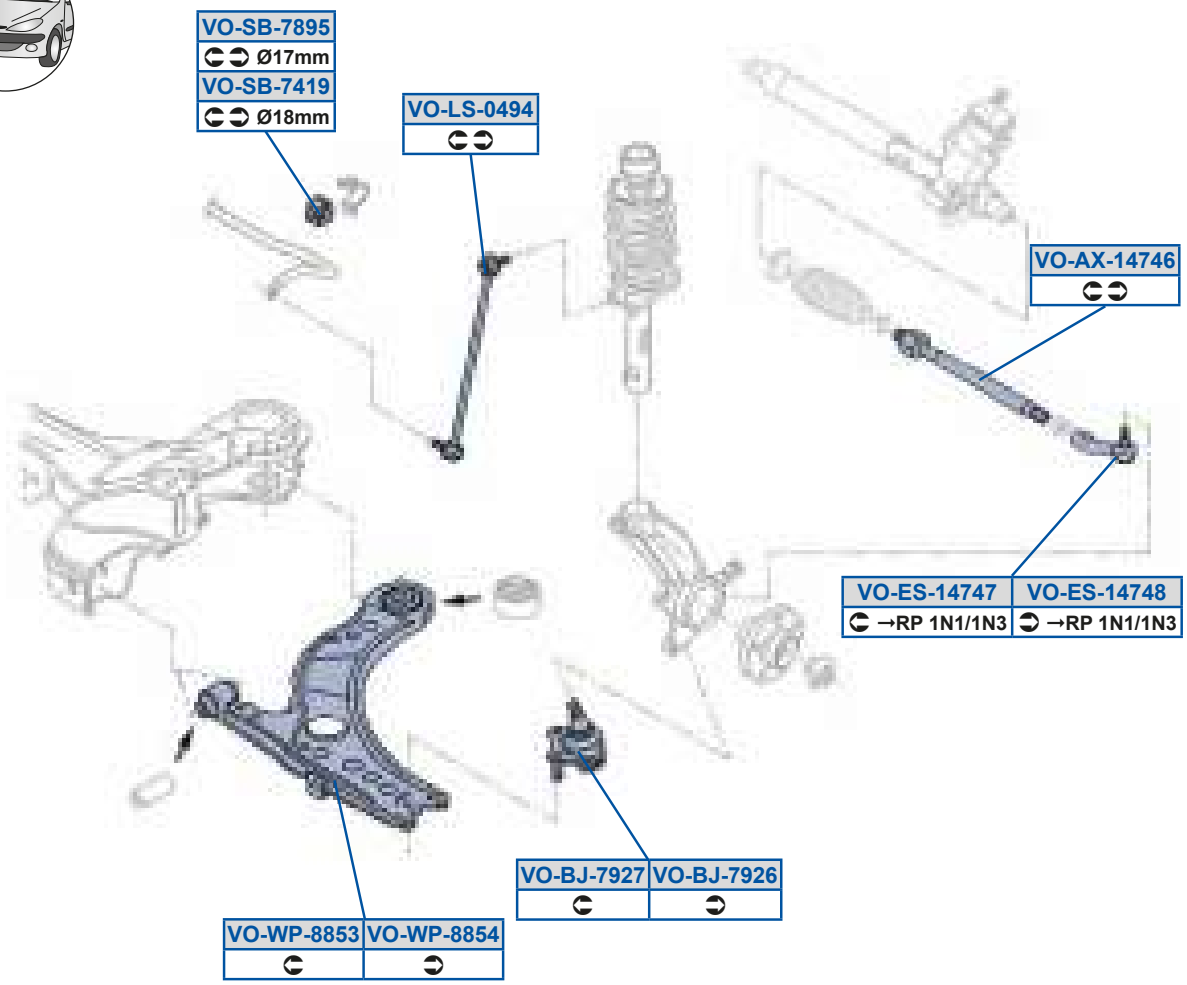

g_ 5Oi 59BEBD
DQ7B9AF87O3DQ7B9AF87P

g_ 5PX5EG>D
Cu7B7EADDO3Dn7B7EADD

g_ 5PX5EG>E
Cu7B7EADCO3Dn7B7EADC

g_ 5Sd59BEBE
DQ7B9AF88O

g_ 5Sd59BEBF
DQ7B9AF89O

g_ 5Zd58BGB
DI 7B88A8CO3DI 7B88A8CP

g_ 5dP5EB9G
DI 7B88A8BS3DI 7B88A8Bd

g_ 5dP5EFGC
DI 7B88A8Ba 3DI 7B88A8BI

g_ 5h a5FFCA
Dn7B7E8C8O3Dn7B7E8C8P

g_ 5h a5FFCB
Dn7B7E8C9O3Dn7B7E8C9P

QWW_	98799		

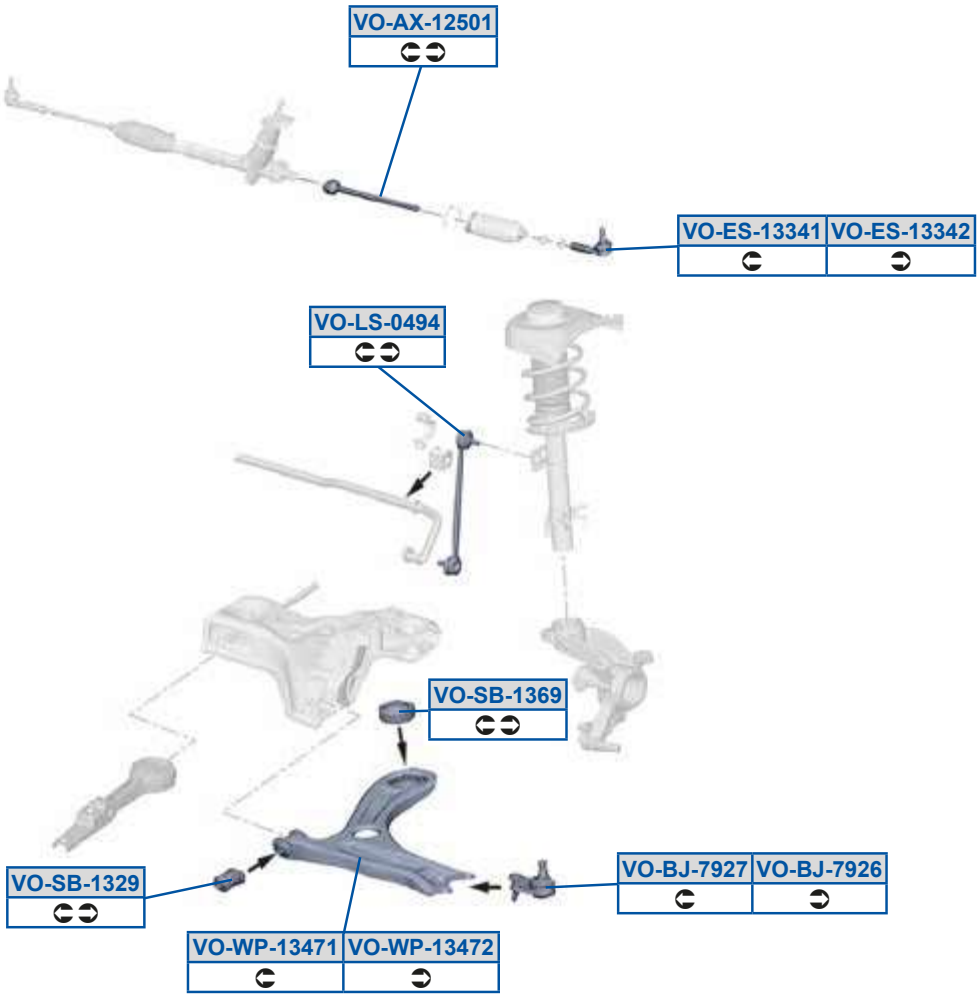

MOOG

g_ 5Oi 59>C89
8o7B9AF87O

g_ 5PX5EG>D
Cu7B7EADDO3Dn7B7EADD

g_ 5PX5EG>E
Cu7B7EADCO3Dn7B7EADC

g_ 5Sd59AAB9
8o7B9AF88O

g_ 5Sd59AAB>
8o7B9AF89O

g_ 5Zd58BGB
DI 7B88A8CO3DI 7B88A8CP

g_ 5dP59A>G
8G8B7E8F93ACEB7E8F9

g_ 5dP59ADG
8X7B7E8F838X7B7E8F8O

g_ 5h a59ABE9
8o7B7E8C8

g_ 5h a59ABE>
8o7B7E8C9

dY_ RO

TOPW WDk; 1	8F7GG 8A78F	TOPW WQ uéCDkC1	8B788 9; 78E
TOPW Wa t é CDkC1	8E789 9; 78E	TOPW Wdt CDkA1	987GG 9; 78E

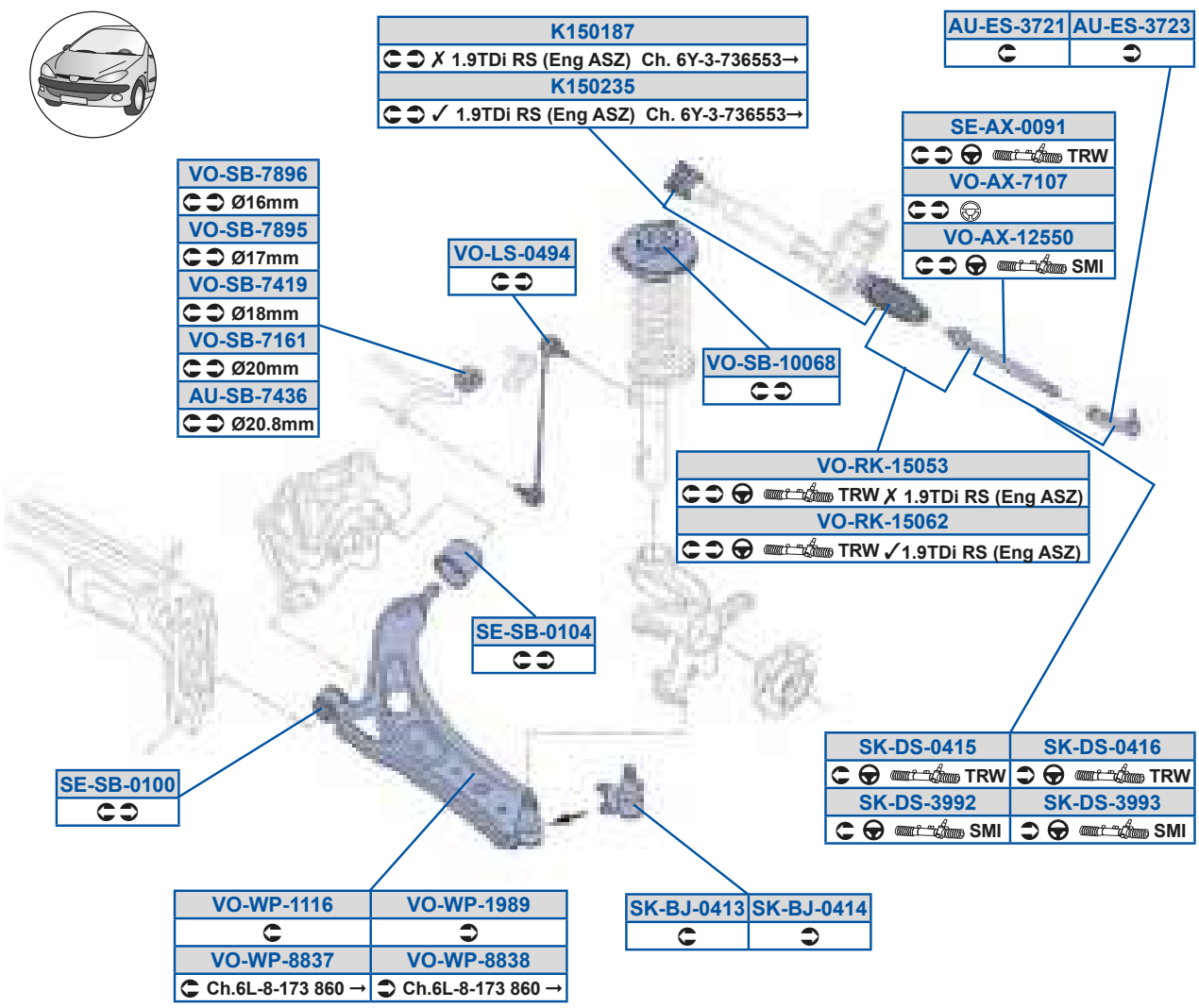

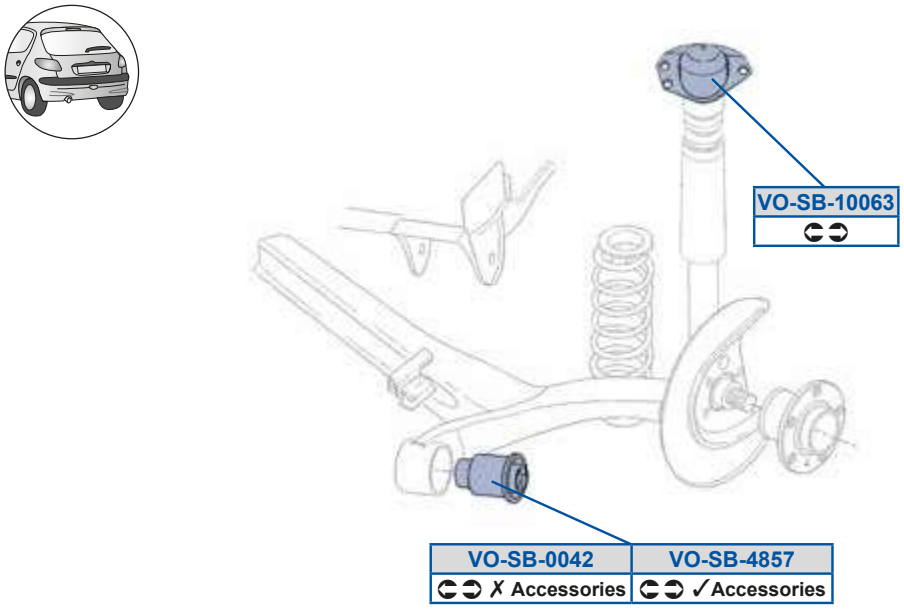

MOOG

Of 5Sd5AE>9
Cu7B99F88O3DI 7B8GF88Q

dY5PX58B9A
DI 7B7EADC03DI 7B7EADCP

g_ 5Zd58BGB
DI 7B88A8C03DI 7B88A8CP

g_ 5dP5EB9G
DI 7B88A8BS3DI 7B88A8Bd

Of 5Sd5AE>A
DI 7B8GF89Q3DI 7B9AF89

dY5PX58B9B
DI 7B7EADD03DI 7B7EADDP

g_ 5cY59C8CA
DI 7B9AF7AP /4Q3DI 7B9AF98P

g_ 5dP5EFGC
DI 7B88A8Ba 3DI 7B88A8Bl

Of 5dP5EBAD
F 7B88A8BP

dY5Rd58B9C
DI 7B8GF7AP3DI 7B8GF7AR

g_ 5cY59C8D>
DI 7B9AF7AP /4Q3DI 7B9AF98P

g_ 5dP5EFGD
DI 7B88A8BX3DI 7B88A8BZ

Y9C89FE
DS7B8GFA8

dY5Rd58B9D
DI 7B8GF7BP3DI 7B8GF7BR

g_ 5dP588B>
8X7C78CB8Q

g_ 5h a5999D
DI 7B7E8C8R

Y9C8>AC
DI 7B9AFA8R

dY5Rd5AGG>
DI 7B9AF7AQ3DI 7B9AF7AU

g_ 5dP5988DA
8X7C8AACAP38X7C8AACAQ

g_ 5h a59GFG
DI 7B7E8C8R 2 P X

dS5Oi 588G9
DI 7B9AF7AP /4Q3DI 7B9AF98P

dY5Rd5AGGA
DI 7B9AF7BQ3DI 7B9AF7BU

g_ 5dP5988DF
Dd7B89AA8S

g_ 5h a5FFAE
Dn7B7E8C83Dn7B7E8C8S

dS5dP58988
DI 7B7E8F9O

g_ 5Oi 59>CC8
DI 7B9AF87Q

g_ 5dP5BFCE
8X7C78CB8R

g_ 5h a5FFAF
Dn7B7E8C93Dn7B7E8C9S

dS5dP5898B
8Y7B7E8FAS3DI 7B7E8FA

g_ 5Oi 5E98E
8G8B8GF983DY7B99F7AO /4O

g_ 5dP5E9D9
DI 7B88A8BT

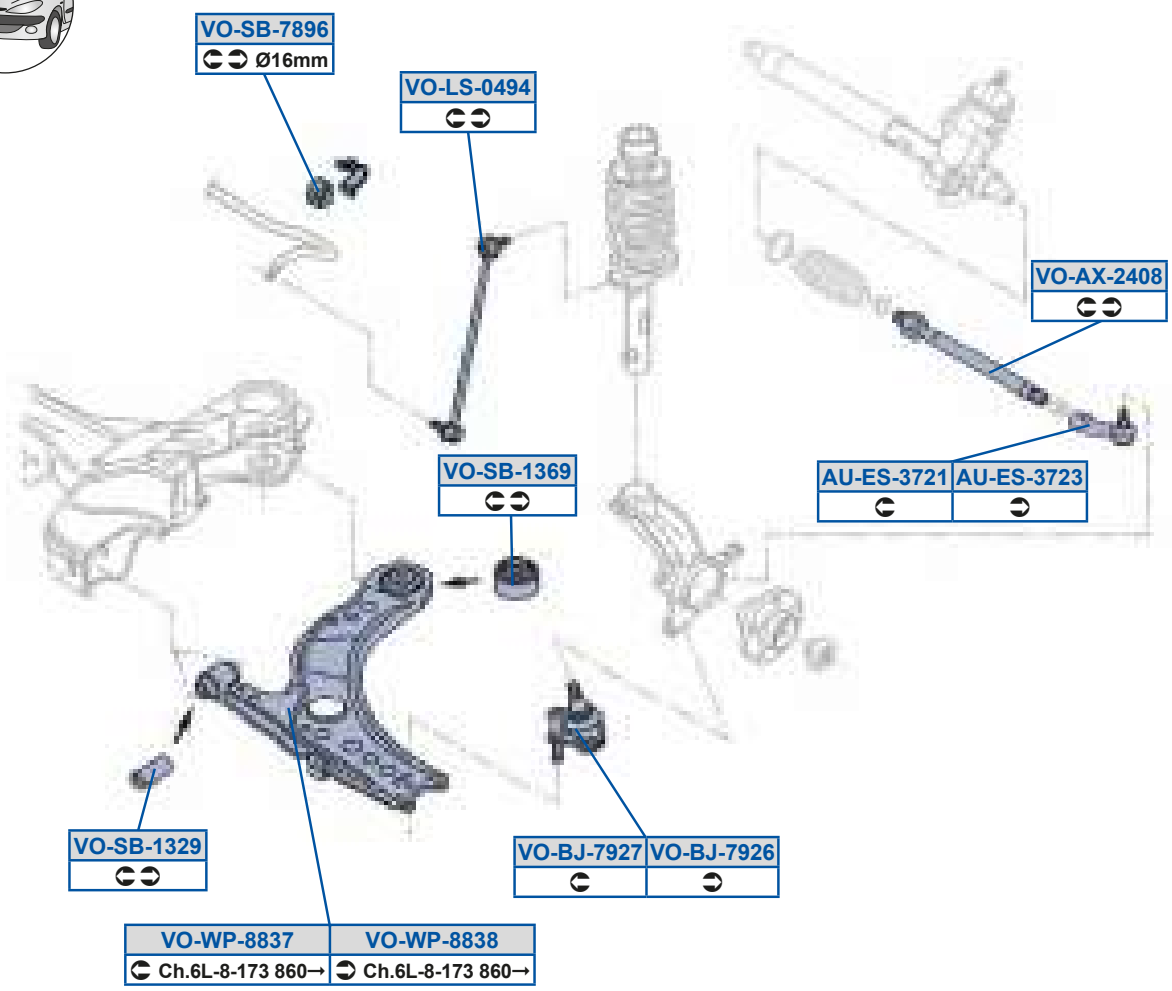
VO-SB-7896
Ø16mm
VO-LS-0494
VO-AX-2408
VO-SB-1369
AU-ES-3721
AU-ES-3723
VO-SB-1329
VO-BJ-7927
VO-BJ-7926
VO-WP-8837
Ch.6L-8-173 860→
VO-WP-8838
Ch.6L-8-173 860→

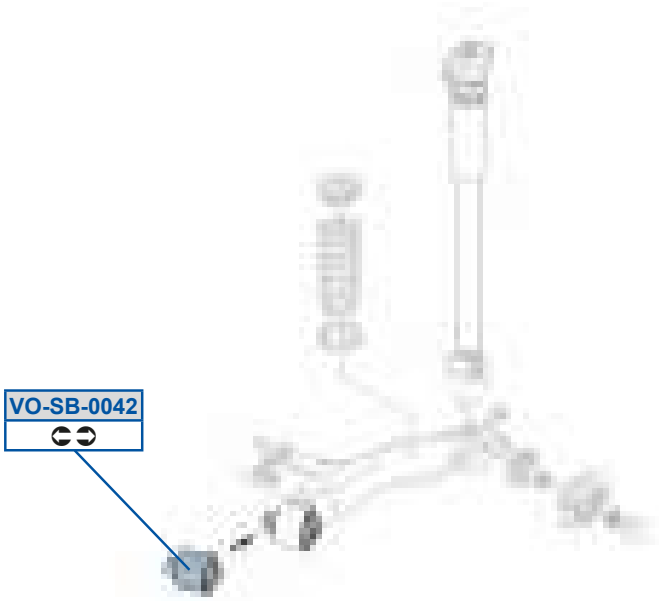
VO-SB-0042

Of 5Sd5AE>9
Cu7B99F88O3DI 7B8GF88Q

Of 5Sd5AE>A
DI 7B8GF89Q3DI 7B9AF89

g_ 5Oi 5>B8F
F 7B9AF7AQ /40

g_ 5PX5EG>D
Cu7B7EADDO3Dn7B7EADD

g_ 5PX5EG>E
Cu7B7EADCO3Dn7B7EADC

g_ 5Zd58BGB
DI 7B88A8CO3DI 7B88A8CP

g_ 5dP588B>
8X7C78CB8Q

g_ 5dP59A>G
8G8B7E8F93ACEB7E8F9

g_ 5dP59ADG
8X7B7E8F838X7B7E8F8O

g_ 5dP5EFGD
DI 7B88A8BX3DI 7B88A8BZ

g_ 5h a5FFAE
Dn7B7E8C83Dn7B7E8C8S

g_ 5h a5FFAF
Dn7B7E8C93Dn7B7E8C9S

TOPW WWq XA1	8F79B	TOPW WWS t x q XC1	9879B

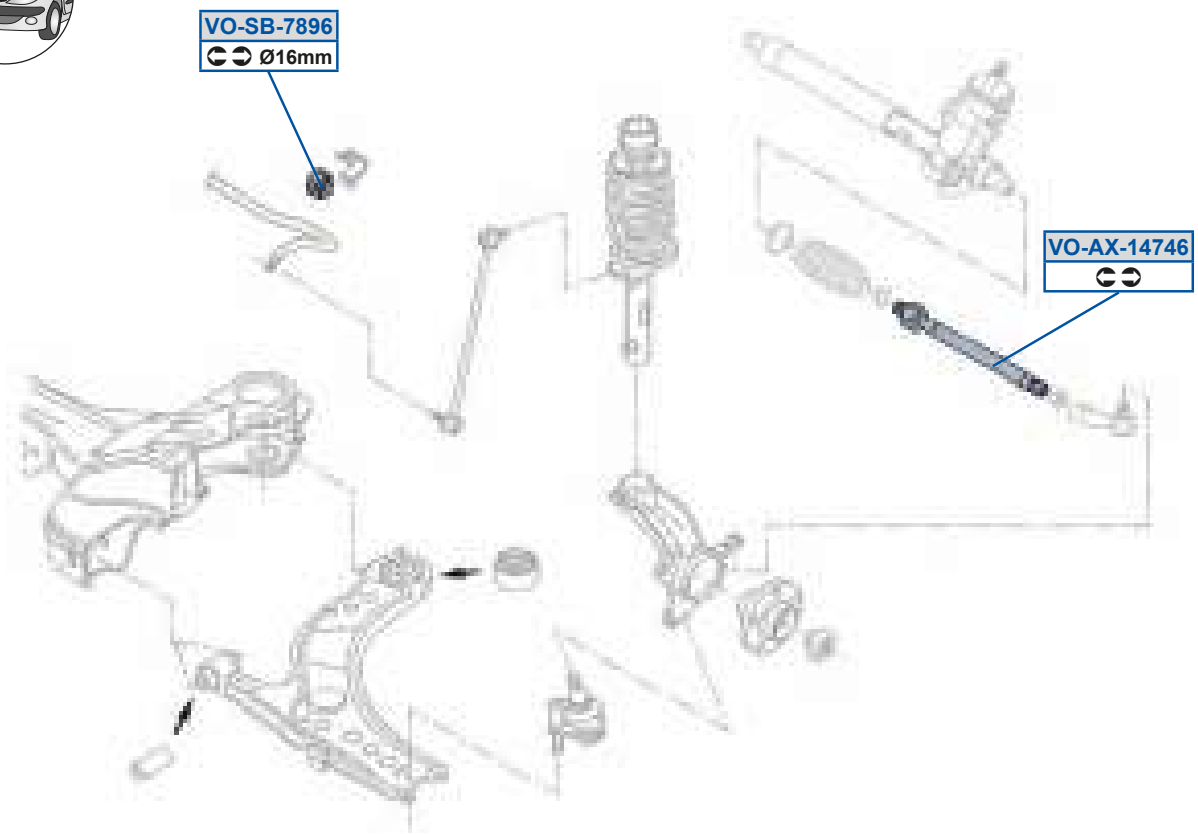

g_ 5Oi 59BEBD

DQ7B9AF8703DQ7B9AF87P

g_ 5dP5EFGD

DI 7B88A8BX3DI 7B88A8BZ

dY_ RO

TSZVQVO WODf 91	987GB	8A7GF	TSZVQVO WS t x ODf C1	8E7GC	8A7GF
TSZVQVO Waév ODf T4Df E1	987GC	8B78;	TSZVQVO WWODf 91	897GF	8D789
TSZVQVO WS t x ODf C1	897GF	8D789			

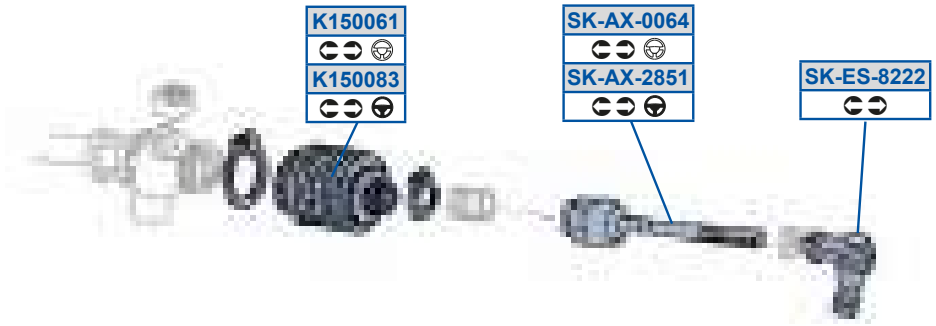

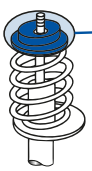

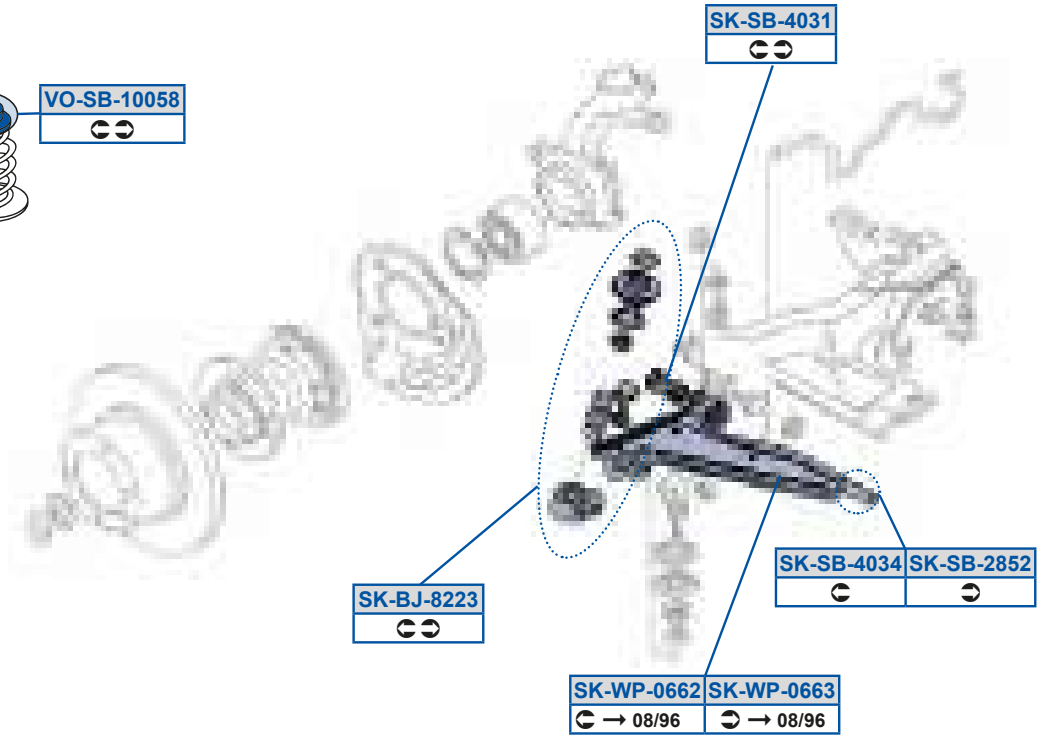

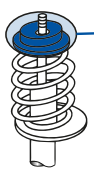

VO-SB-10061

Y9C88D9
88BC7GF99388BC7GF9A

Y9C88FA
DS7B8GFA83Dd7B99FA8

dY5Oi 588DB
77EAC79EFd3Du7B99F7E

dY5Oi 5>FC9
Du7B99F7E

dY5PX5F>>A
88CB979B73Du7B7EADC

dY5Sd5F>>>
77EAC79EFi 388CC77BB7

dY5dP5>FC>
Du7B7EC7B

dY5dP5B8A9
88CB999G73Du7B7E8F9

dY5dP5B8AB
Du7B7EC7A

dY5h a58DD>
Du7B7E8C8O3Du7B7E8C8P

dY5h a58DDA
Du7B7E8C9O3Du7B7E8C9P

g_ 5dP5988CF
F9AB89ACC

g_ 5dP5988D9
8E8C8AAAA38G8C89AAA

dY_ RO

_QeOgW W09f ; 1	8G7GD 8; 78B	_QeOgW WQ ué09f C1	8E7GF 8; 78B

K150182	⊂⊃ ✗ 1.9TDi (Eng ASZ), 1.8T (Eng AUQ)
K150231	⊂⊃ ✓ 1.9TDi (Eng ASZ), 1.8T (Eng AUQ)

VO-ES-8283	⊂ →Ch. 1U-W061000
VO-ES-8285	⊃ →Ch. 1U-W061000
VO-ES-1507	⊂ Ch. 1U-W061001→
VO-ES-1506	⊃ Ch. 1U-W061001→

VO-AX-8286	⊂⊃ →Ch. 1U-W061000
VO-AX-13741	⊂⊃ Ch. 1U-W061001→

VO-SB-14966	⊂⊃ Ø10mm
VO-SB-14628	⊂⊃ Ø15mm
VO-SB-6818	⊂⊃ Ø17mm
VO-SB-13250	⊂⊃ Ø19mm
VO-SB-7422	⊂⊃ Ø20mm
AU-SB-4847	⊂⊃ Ø21mm
VO-SB-6796	⊂⊃ Ø23mm

VO-SB-10053	⊂⊃

VO-SB-1369	⊂⊃

VO-RK-15052	⊂⊃ Ch. 1U-W061001→ ✗ 1.9TDi (Eng ASZ), 1.8T (Eng AUQ)
VO-RK-15061	⊂⊃ Ch. 1U-W061001→ ✓1.9TDi (Eng ASZ), 1.8T (Eng AUQ)

VO-DS-8281	⊂ →Ch. 1U-W061000
VO-DS-8284	⊃ →Ch. 1U-W061000
VO-DS-1549	⊂ Ch. 1U-W061001→
VO-DS-1548	⊃ Ch. 1U-W061001→

VO-SB-4523	⊂⊃

VO-LS-0475	⊂⊃ Fe ↔ 105mm Ø23mm ✗ 4x4
VO-LS-4916	⊂⊃ ✓ P Ø21mm
VO-LS-7327	⊂⊃ ✓ P Ø23mm

VO-WP-1553	⊂
VO-WP-1552	⊃

VO-SB-1329	⊂⊃

VO-BJ-8287	⊂
VO-BJ-8288	⊃

VO-LS-2406	⊂ Fe ✓ 4x4 ↔ 336mm
VO-LS-0456	⊃ Fe ✓ 4x4 ↔ 336mm

VO-RK-4853	⊂⊃ ❶+❷+❸+❹ ✗ 4x4

✗ 4x4

VO-SB-10063	⊂⊃

✓ 4x4

VO-SB-10130	⊂⊃

VO-LS-3680	⊂⊃
AU-LS-4193	⊂⊃

VO-SB-10179	⊂⊃

VO-SB-0042	⊂⊃ ✗ Accessories
VO-SB-4857	⊂⊃ ✓ Accessories

VO-SB-10131	⊂⊃

Of 5Zd5B9GA
8X7C7CBDDQ

Of 5dP5BFBE
8X7B88A8BQ

Y9C89F>
8X7B99FA838X7B99FA8P

Y9C8>A9
8X7B99FA8P

g_ 5Oi 59AEB9
8X7B99F7AP38X7B99F7BP

g_ 5Oi 5F>FD
8V7B99F7A /40

g_ 5PX5F>FE
8X7B7EADC038X7B7EADCP

g_ 5PX5F>FF
8X7B7EADD038X7B7EADDP

g_ 5Rd59CBF
8X7B99F7B038X7B99F7BP

g_ 5Rd59CBG
8X7B99F7A038X7B99F7AP

g_ 5Rd5F>F9
8X7B99F7A38X7B99F7A0

g_ 5Rd5F>FB
8X7B99F7B38X7B99F7B0

g_ 5Sd59C8D
8X7B99F89P3DI 7B9AF89

g_ 5Sd59C8E
8X7B99F88P3DI 7B9AF88

g_ 5Sd5F>FA
8X7B99F880

g_ 5Sd5F>FC
8X7B99F8938X7B99F890

g_ 5Zd58BCD
8X7B88A8DR

g_ 5Zd58BEC
8X7B88A8C38X7B88A8CP

g_ 5Zd5>B8D
8X7B88A8CR

g_ 5Zd5ADF8
8X7C7CBDDP

g_ 5Zd5BG9D
8X7B88A8C38X7B88A8CP

g_ 5Zd5EA>E
8X7B88A8CV

g_ 5c Y59C8C>
8X7B99F7AP38X7B99F98P

g_ 5c Y59C8D9
8X7B99F7AP38X7B99F98P

g_ 5c Y5BFCA

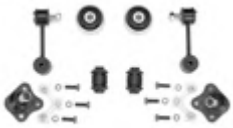

g_ 5dP588B>
8X7C78CB8Q

g_ 5dP5988CA
8V7B89ADC038X7B899BG

g_ 5dP5988DA
8X7C8AACAP38X7C8AACAQ

g_ 5dP5989A8
8X7C7C8BC038X7C7C8BCP

g_ 5dP5989A9
8X7C7C8E8P

g_ 5dP5989EG
8X7C7C97A38X7C7CADCR

g_ 5dP59A>C8
8X7B88A8Bn

dY_RO

_t r zr W5L >88B119f pn

K150182
✗ 1.9TDi (Eng ASZ), 1.8T (Eng AUQ)
K150231
✓ 1.9TDi (Eng ASZ), 1.8T (Eng AUQ)

VO-ES-8283	VO-ES-8285
→Ch. 1U-W061000	→Ch. 1U-W061000
VO-ES-1507	**VO-ES-1506**
Ch. 1U-W061001→	Ch. 1U-W061001→

VO-AX-8286
→Ch. 1U-W061000
VO-AX-13741
Ch. 1U-W061001→

VO-SB-14966
Ø10mm
VO-SB-14628
Ø15mm
VO-SB-6818
Ø17mm
VO-SB-13250
Ø19mm
VO-SB-7422
Ø20mm
AU-SB-4847
Ø21mm
VO-SB-6796
Ø23mm

VO-SB-10053

VO-SB-1369

VO-RK-15052
Ch. 1U-W061001→
✗ 1.9TDi (Eng ASZ), 1.8T (Eng AUQ)
VO-RK-15061
Ch. 1U-W061001→
✓1.9TDi (Eng ASZ), 1.8T (Eng AUQ)

VO-DS-8281	VO-DS-8284
→Ch. 1U-W061000	→Ch. 1U-W061000
VO-DS-1549	**VO-DS-1548**
Ch. 1U-W061001→	Ch. 1U-W061001→

VO-SB-4523

VO-LS-0475
Fe 105mm Ø23mm ✗ 4x4
VO-LS-4916
✓ P Ø21mm
VO-LS-7327
✓ P Ø23mm

VO-WP-1553	VO-WP-1552

VO-SB-1329

VO-BJ-8287	VO-BJ-8288

VO-LS-2406	VO-LS-0456
Fe ✓ 4x4 336mm	Fe ✓ 4x4 336mm

VO-RK-4853
❶+❷+❸+❹ ✗ 4x4

✗ 4x4

VO-SB-10063

✓ 4x4

VO-SB-10130

VO-LS-3680
AU-LS-4193

VO-SB-10179

VO-SB-0042
✗ Accessories
VO-SB-4857
✓ Accessories

VO-SB-10131

MOOG

g_ 5dP59A>G
8G8B7E8F93ACEB7E8F9

g_ 5dP59ADG
8X7B7E8F838X7B7E8F8O

g_ 5dP59BD>F
8X7B88A9E

g_ 5dP59BGDD
FR7C88A9EQ

g_ 5dP5BC>A
8X78GGB9G

g_ 5dP5BFCE
8X7C78CB8R

g_ 5dP5DEGD
8X7B88A8BU38X7B88A8Bt

g_ 5dP5DF9F
8X7B88A8B38X7B88A8Bo

g_ 5dP5EB>>
8X7B88A8Bi

g_ 5h a59CC>
8X7B7E8C8O38X7B7E8C8P

g_ 5h a59CCA
8X7B7E8C8O38X7B7E8C8P

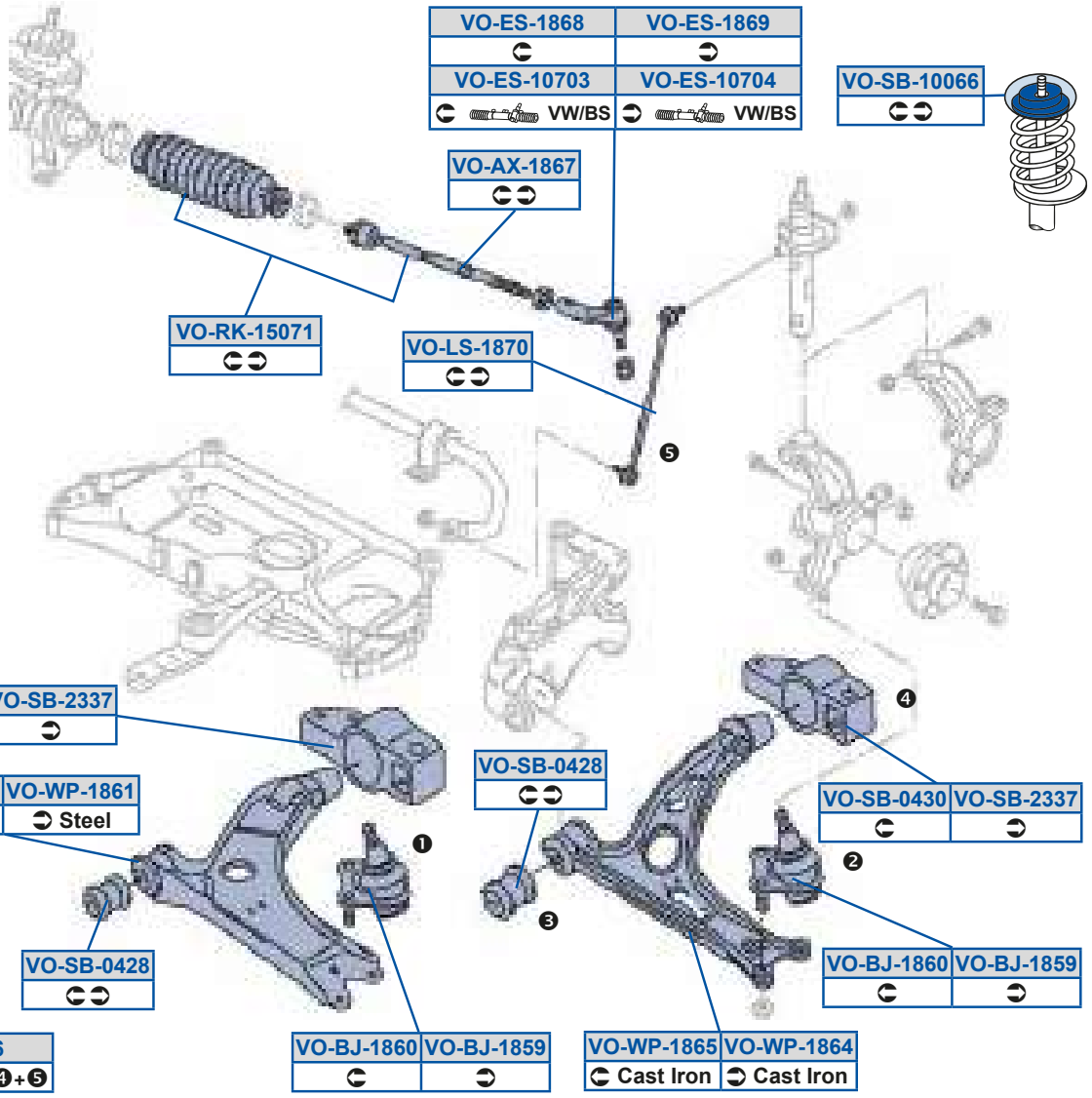
VO-ES-1868
VO-ES-1869
VO-ES-10703 VW/BS
VO-ES-10704 VW/BS
VO-SB-10066
VO-AX-1867
VO-RK-15071
VO-LS-1870
VO-SB-0430 VO-SB-2337
VO-WP-1862 Steel
VO-WP-1861 Steel
VO-SB-0428
VO-SB-0428
VO-SB-0430 VO-SB-2337
VO-BJ-1860 VO-BJ-1859
VO-RK-6606 ❶+❷+❸+❹+❺
VO-BJ-1860 VO-BJ-1859
VO-WP-1865 Cast Iron
VO-WP-1864 Cast Iron

✗ 4 x 4

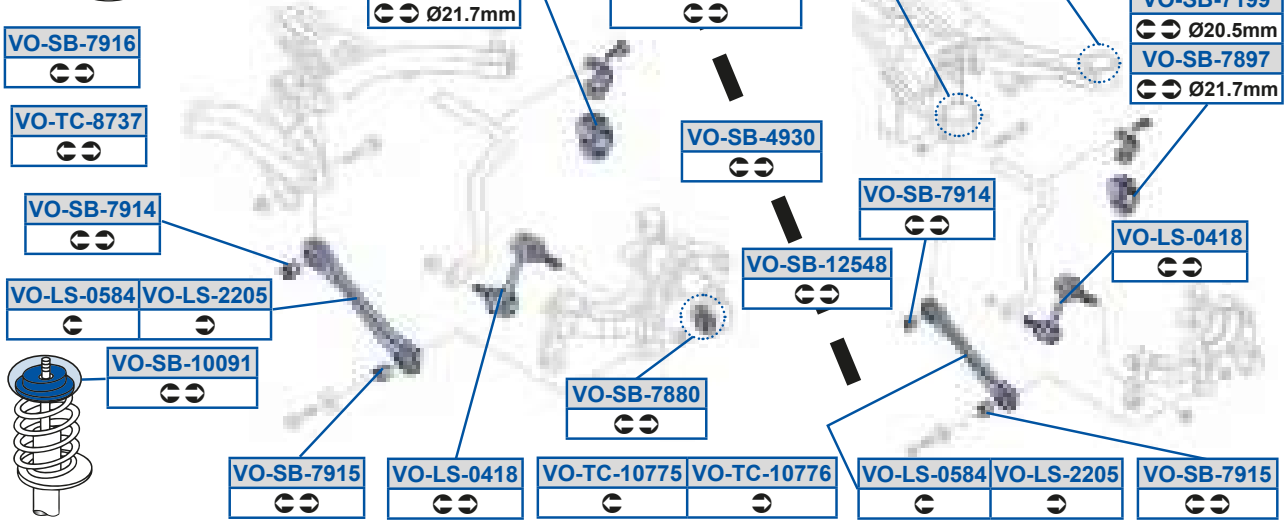
VO-SB-13843 Ø15mm
VO-SB-7199 Ø20.5mm
VO-SB-7897 Ø21.7mm
VO-SB-8811 VO-TC-0586
VO-SB-8812 VO-TC-0586
VO-TC-0586
✓ 4 x 4
VO-SB-8448
VO-SB-8447
VO-SB-13843 Ø15mm
VO-SB-8444 Ø19.5mm
VO-SB-7199 Ø20.5mm
VO-SB-7897 Ø21.7mm
VO-SB-7916
VO-TC-8737
VO-SB-4930
VO-SB-7914
VO-SB-7914
VO-SB-12548
VO-LS-0418
VO-LS-0584 VO-LS-2205
VO-SB-10091
VO-SB-7880
VO-SB-7915
VO-LS-0418
VO-TC-10775 VO-TC-10776
VO-LS-0584 VO-LS-2205
VO-SB-7915

g_ 5Oi 59FDE
8Y7B9AF87O

g_ 5PX59FCG
8Y7B7EADDP38Y7B7EADDQ

g_ 5PX59FD8
8Y7B7EADCP38Y7B7EADCQ

g_ 5Sd598E8A
8Y7B9AF88Q38Y7B9AF88R

g_ 5Sd598E8B
8Y7B9AF89Q38Y7B9AF89R

g_ 5Sd59FDF
8Y7B9AF88Q38Y7B9AF88S

g_ 5Sd59FDG
8Y7B9AF89Q38Y7B9AF89S

g_ 5Zd58B9F
8Y7C7CBDC0038Y7C7CBDCQ

g_ 5Zd58CFB
8Y7C78C9GS38Y7C78C9GT

g_ 5Zd59FE8
8Y7B88A8CP38Y7B88A8CX

g_ 5Zd5>>8C
8Y7C78CA7P38Y7C78CA7Q

g_ 5c Y59C8E9
8Y7B9AF87O

g_ 5c Y5DD8D

g_ 5dP58B>F
8Y7B7E8F938Y7B7E8F9O

g_ 5dP58BA8
8Y78GG9A8U38Y78GG9A8X

g_ 5dP5988DD
Dd7B899BGQ

g_ 5dP5988G9
8Y7C8AACAX38Y7C8AACAn

g_ 5dP59>CBF
8Y7C7CCCA38Y7C7CCCAO

g_ 5dP59AFBA
8Y7C88A9EPO

g_ 5dP5>AAE
8Y78GG9A9U38Y78GG9A9X

g_ 5dP5BGA8
8Y7C7CCB8Q38Y7C7CCB8R

g_ 5dP5E9GG
8Y7C88A9EOn

g_ 5dP5EFF8
8Y7C7CCCA38Y7C7CCCAO

g_ 5dP5EFGE
8Y7C88A9EOo

g_ 5dP5EG9B
8Y7C78CB8Q

g_ 5dP5EG9C
8Y7C7CCBAO

g_ 5dP5EG9D
8Y7C7C8E8Q38Y7C7C8EAQ

g_ 5dP5FBBB
8Y7C88A9EOI

g_ 5dP5FBBE
8Y7C7C8BCS38Y7C7C8BCU

g_ 5dP5FBBF
8Y7C7C8BCT38Y7C7C8BCV

g_ 5dP5FF99
8Y7C7C9EGO

g_ 5dP5FF9>
8Y7C7C97AO

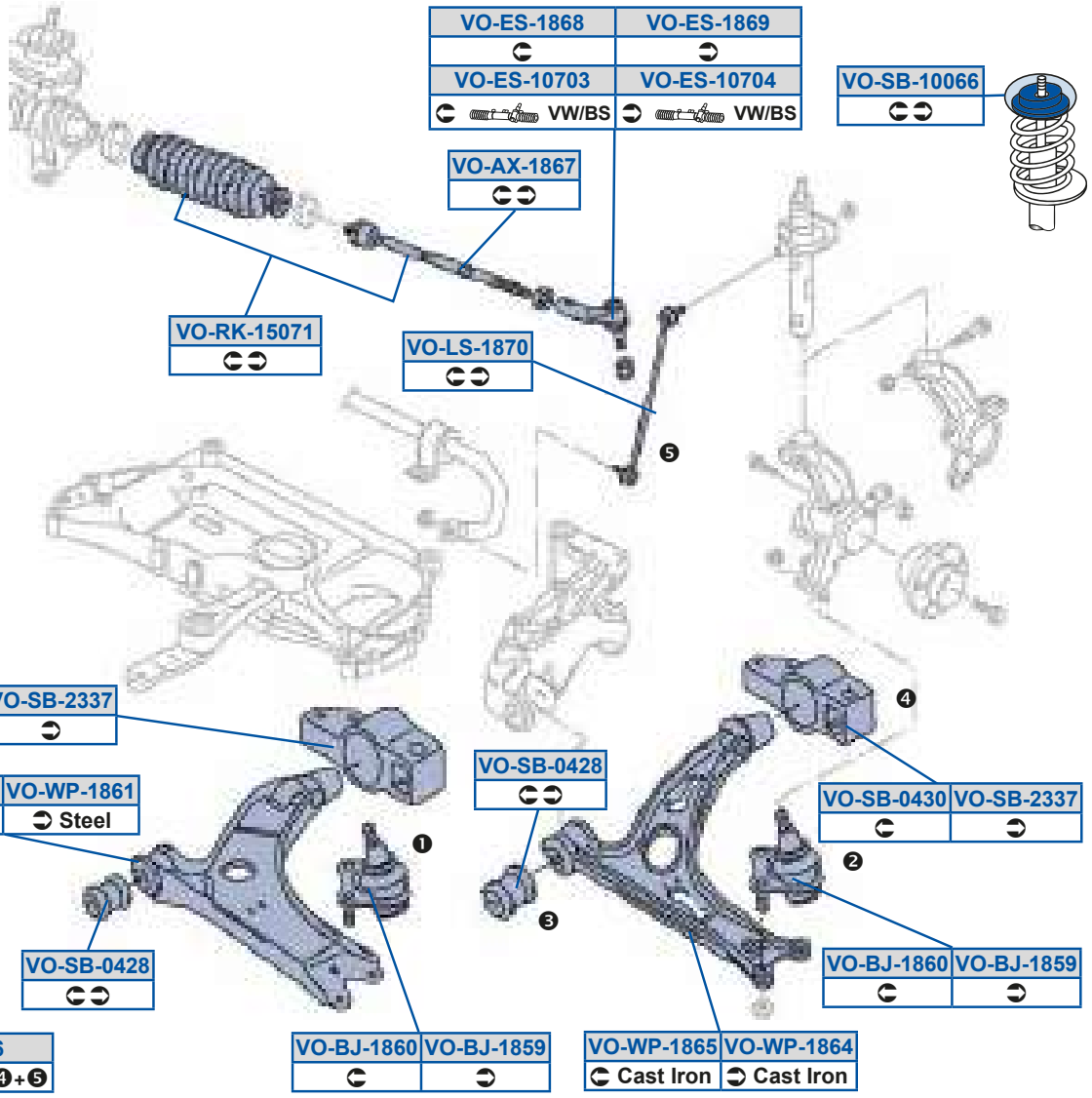
VO-ES-1868
VO-ES-1869
VO-ES-10703 VW/BS
VO-ES-10704 VW/BS
VO-SB-10066
VO-AX-1867
VO-RK-15071
VO-LS-1870
VO-SB-0430 VO-SB-2337
VO-WP-1862 Steel
VO-WP-1861 Steel
VO-SB-0428
VO-SB-0428
VO-SB-0430 VO-SB-2337
VO-BJ-1860 VO-BJ-1859
VO-RK-6606
❶+❷+❸+❹+❺
VO-BJ-1860 VO-BJ-1859
VO-WP-1865 Cast Iron
VO-WP-1864 Cast Iron

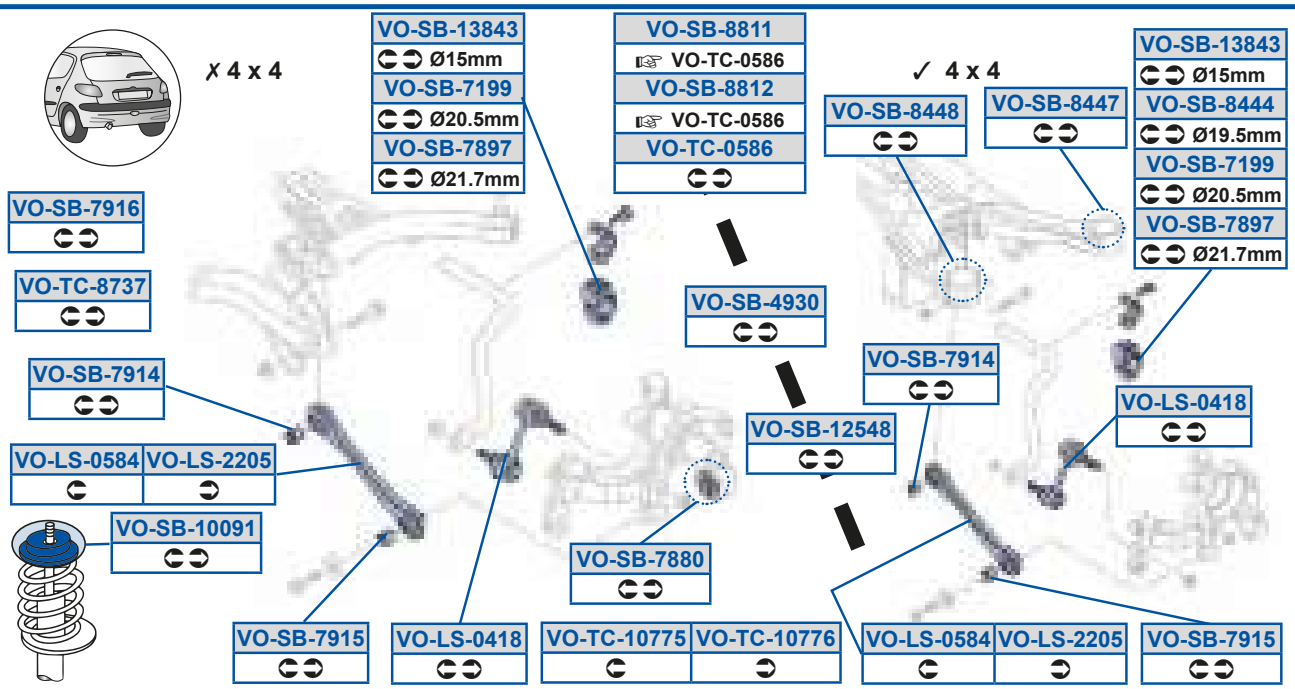
✗ 4 x 4
VO-SB-13843 Ø15mm
VO-SB-7199 Ø20.5mm
VO-SB-7897 Ø21.7mm
VO-SB-8811
VO-TC-0586
VO-SB-8812
VO-TC-0586
VO-TC-0586
✓ 4 x 4
VO-SB-8448
VO-SB-8447
VO-SB-13843 Ø15mm
VO-SB-8444 Ø19.5mm
VO-SB-7199 Ø20.5mm
VO-SB-7897 Ø21.7mm
VO-SB-7916
VO-TC-8737
VO-SB-4930
VO-SB-7914
VO-SB-7914
VO-SB-12548
VO-LS-0418
VO-LS-0584 VO-LS-2205
VO-SB-10091
VO-SB-7880
VO-SB-7915
VO-LS-0418
VO-TC-10775 VO-TC-10776
VO-LS-0584 VO-LS-2205
VO-SB-7915

g_ 5eQ58CFD
8Y7C7CA9AV38Y7C7CA9Ad

g_ 5eQ598EEC
8Y7C7C99AS38Y7C7C99AV

g_ 5eQ598EED
8Y7C7C99BS38Y7C7C99BV

g_ 5eQ5FEAE
8Y7C7CA880038Y7C7CA880P

g_ 5h a59FD9
8Y7B7E8C90038Y7B7E8C90V

g_ 5h a59FD>
8Y7B7E8C80038Y7B7E8C80V

g_ 5h a59FDB
8Y7B7E8C90Q38Y7B7E8C9a

g_ 5h a59FDC
8Y7B7E8C80Q38Y7B7E8C8t

_QeOgW WWCSA4] ZA4] cA1	9979;	_QeOgW WWQ uéCSC1	9979;

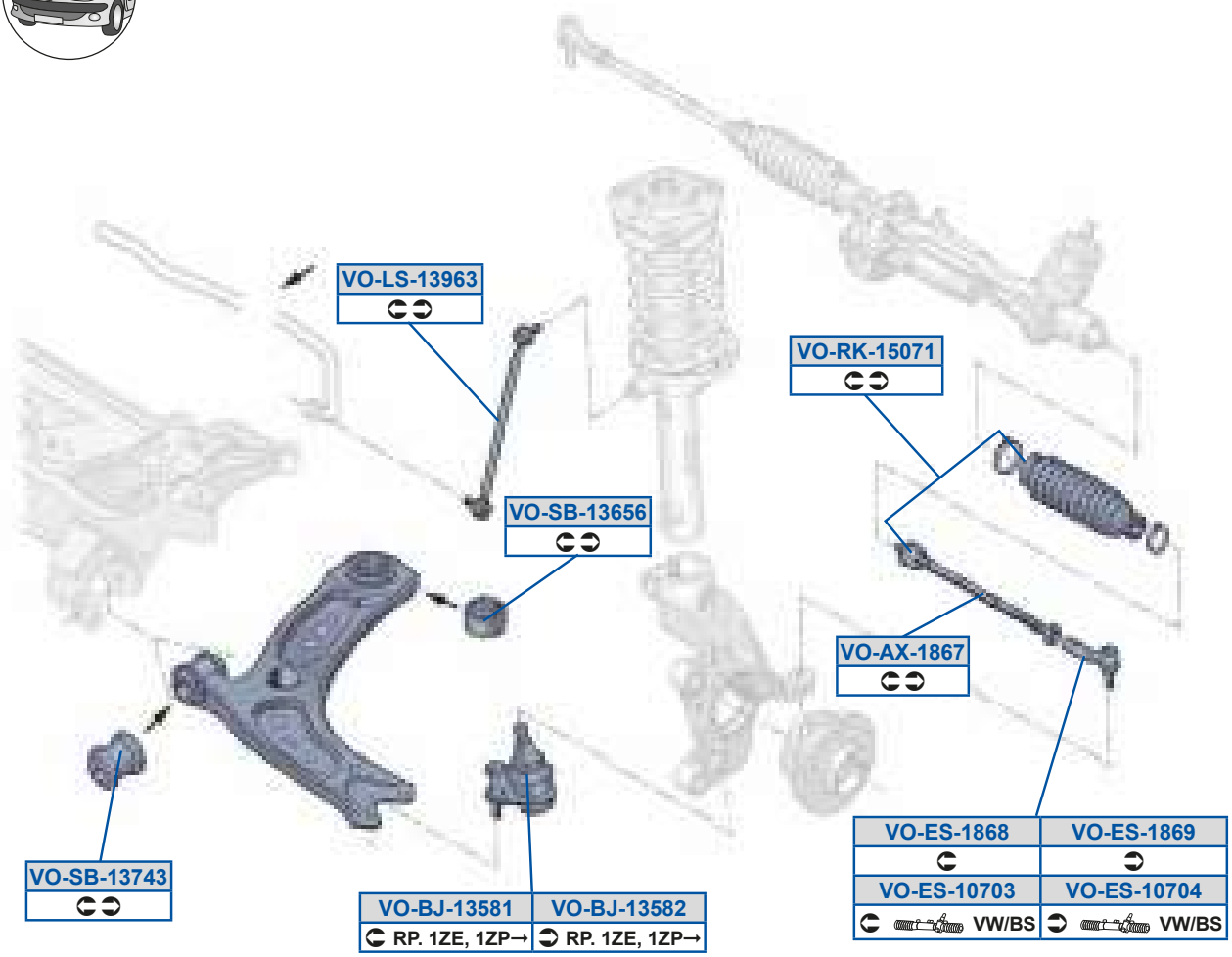

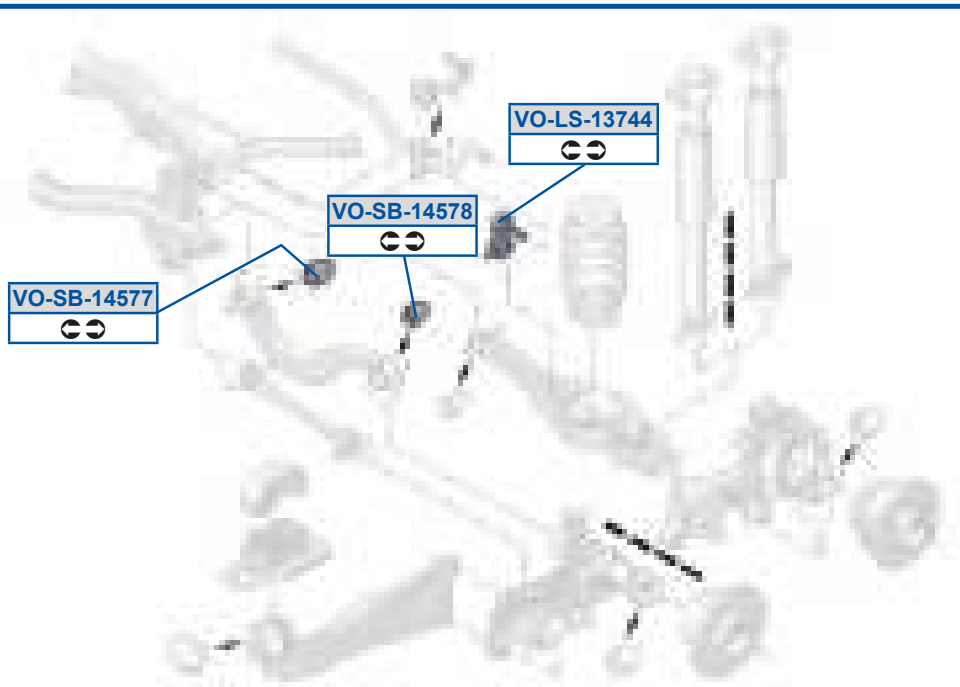

MOOG

g_ 5Oi 59FDE
8Y7B9AF87O

g_ 5Zd59AGDA
Cl 7B88A8CP

g_ 5PX59ACF9
Cl 7B7EADCO

g_ 5c Y59C8E9
8Y7B9AF87O

g_ 5PX59ACF>
Cl 7B7EADDO

g_ 5dP59ADCD
Cl 7B7E8FAS

g_ 5Sd598E8A
8Y7B9AF88Q38Y7B9AF88R

g_ 5dP59AEBA
Cl 7B7E8F93Cl 7B7E8F9O

g_ 5Sd598E8B
8Y7B9AF89Q38Y7B9AF89R

g_ 5dP59BCEE
Cl 7 C78 C9G P /40

g_ 5Sd59FDF
8Y7B9AF88Q38Y7B9AF88S

g_ 5dP59BCEF
Cl 7C78C9GQ /40BCl 7C7CCBAP

g_ 5Sd59FDG
8Y7B9AF89Q38Y7B9AF89S

g_ 5Zd59AEBB
Cl 7C7CBDCQ

dY_ RO

cOaVR	8E79;	cOaVR q 0; 1	98799
cOaVR q VA1	8C79C	cOaVR d t vxut v	9879A
cOaVR d t vxut v q V91	8C79C		

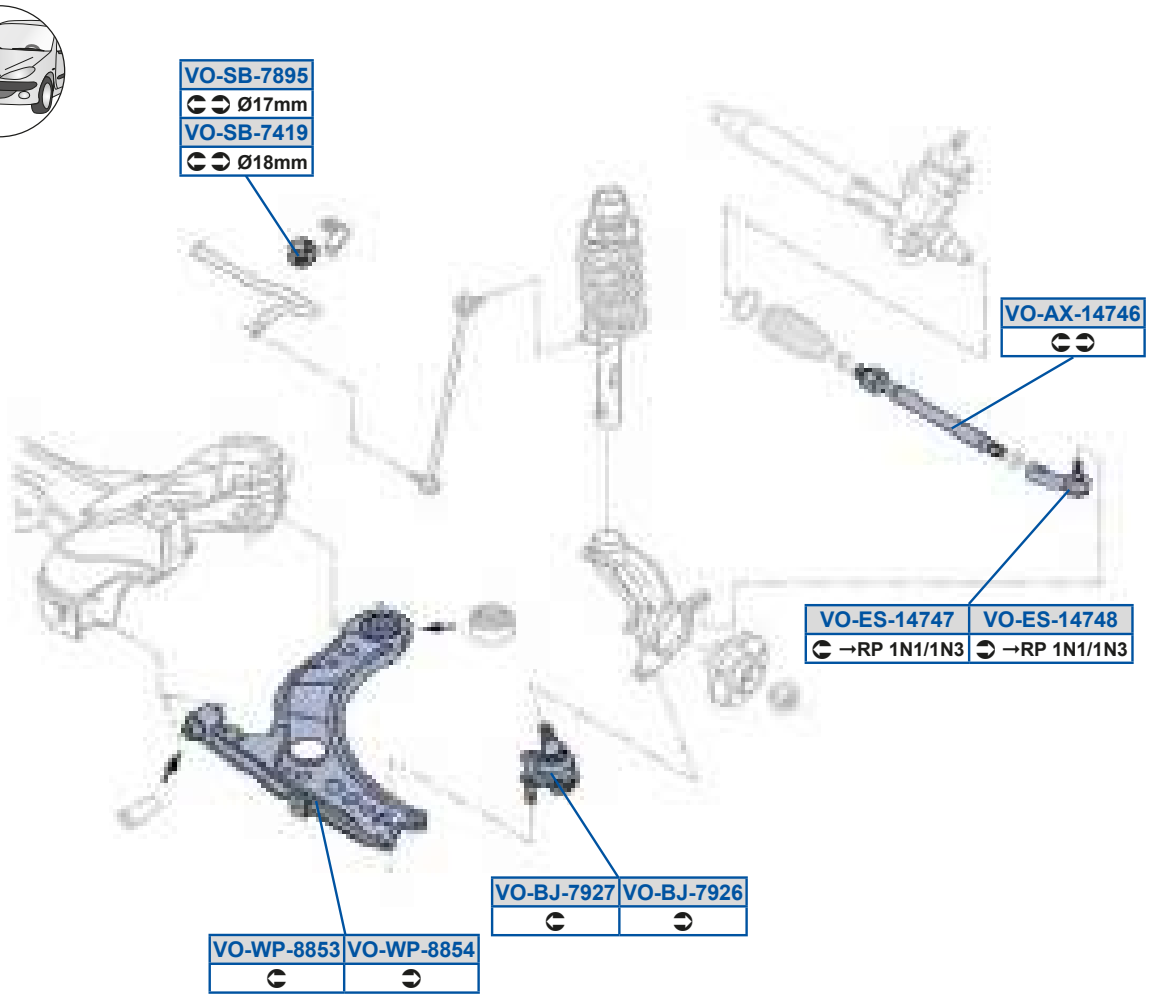

MOOG

g_ 5Oi 59BEBD
DQ7B9AF87O3DQ7B9AF87P

g_ 5PX5EG>D
Cu7B7EADDO3Dn7B7EADD

g_ 5PX5EG>E
Cu7B7EADCO3Dn7B7EADC

g_ 5Sd59BEBE
DQ7B9AF88O

g_ 5Sd59BEBF
DQ7B9AF89O

g_ 5dP5EB9G
DI 7B88A8BS3DI 7B88A8Bd

g_ 5dP5EFGC
DI 7B88A8Ba 3DI 7B88A8BI

g_ 5h a5FFCA
Dn7B7E8C8O3Dn7B7E8C8Q

g_ 5h a5FFCB
Dn7B7E8C9O3Dn7B7E8C9Q

c__[deSc 0CX1	8A78D 8C79C	c__[deSc a t é 0CX1	8A78E 8C79C

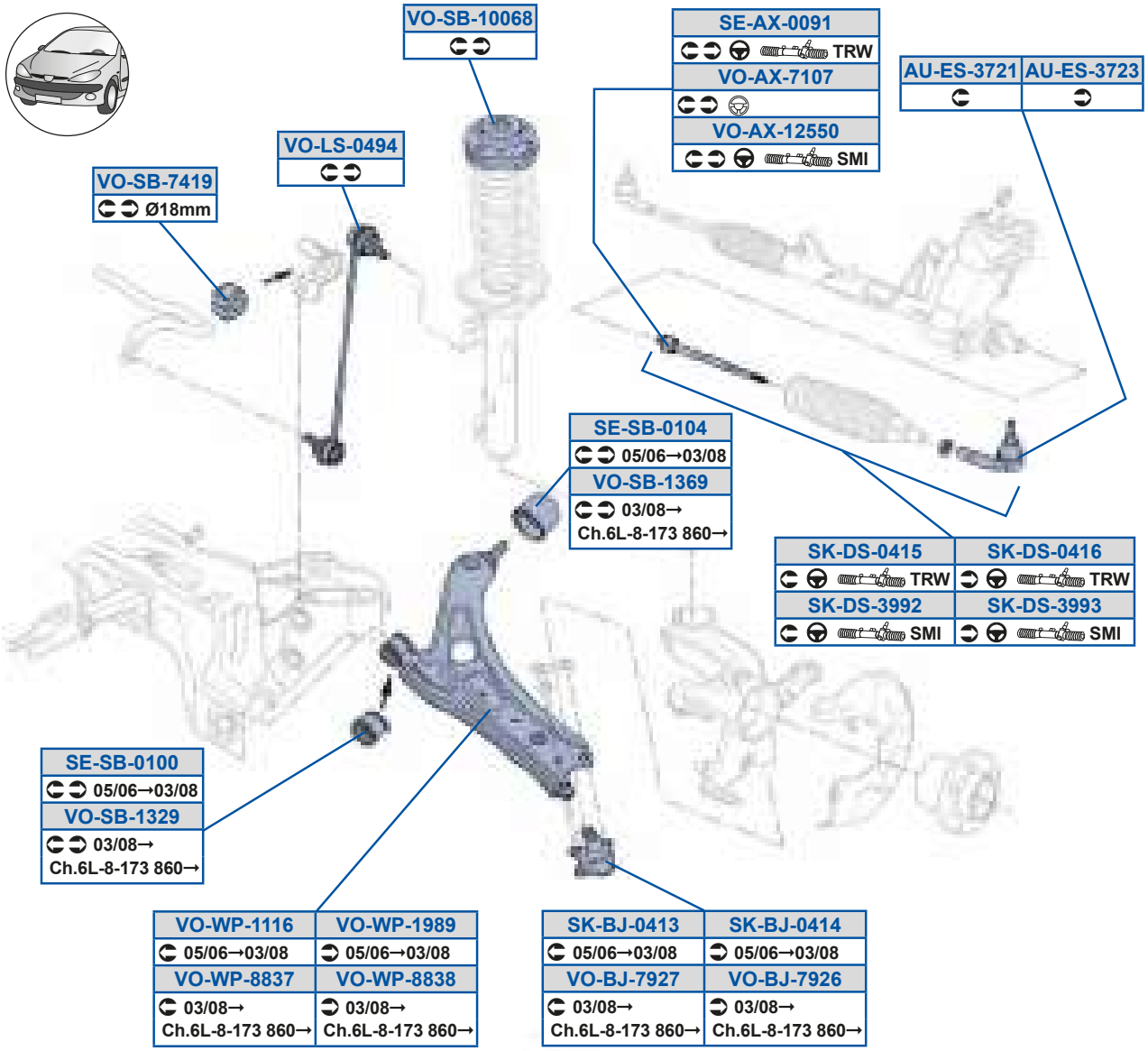

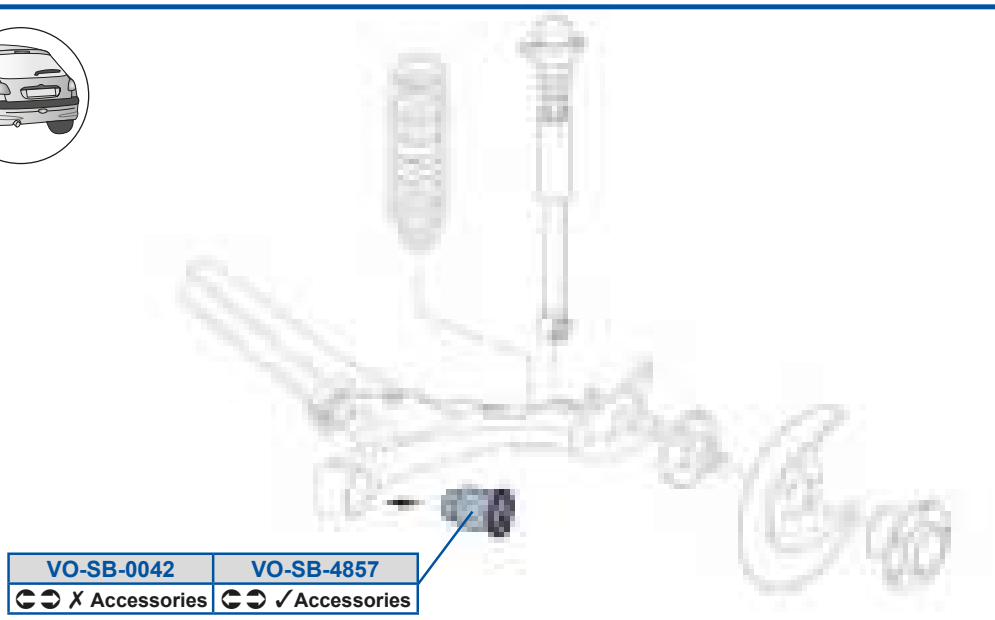

Of 5Sd5AE>9
Cu7B99F88O3DI 7B8GF88Q

dY5Rd58B9D
DI 7B8GF7BP3DI 7B8GF7BR

g_ 5dP588B>
8X7C78CB8Q

g_ 5h a5FFAE
Dn7B7E8C83Dn7B7E8C8S

Of 5Sd5AE>A
DI 7B8GF89Q3DI 7B9AF89

dY5Rd5AGG>
DI 7B9AF7AQ3DI 7B9AF7AU

g_ 5dP5988DF
Dd7B89AA8S

g_ 5h a5FFAF
Dn7B7E8C93Dn7B7E8C9S

dS5Oi 588G9
DI 7B9AF7AP /4O3DI 7B9AF98P

dY5Rd5AGGA
DI 7B9AF7BQ3DI 7B9AF7BU

g_ 5dP59A>G
8G8B7E8F93ACEB7E8F9

dS5dP58988
DI 7B7E8F9O

g_ 5Oi 59>CC8
DI 7B9AF87Q

g_ 5dP59ADG
8X7B7E8F838X7B7E8F8O

dS5dP5898B
8Y7B7E8FAS3DI 7B7E8FA

g_ 5Oi 5E98E
8G8B8GF983DY7B99F7AO /4O

g_ 5dP5BFCE
8X7C78CB8R

dY5PX58B9A
DI 7B7EADCO3DI 7B7EADCP

g_ 5PX5EG>D
Cu7B7EADDO3Dn7B7EADD

g_ 5dP5EB9G
DI 7B88A8BS3DI 7B88A8Bd

dY5PX58B9B
DI 7B7EADDO3DI 7B7EADDP

g_ 5PX5EG>E
Cu7B7EADCO3Dn7B7EADC

g_ 5h a5999D
DI 7B7E8C8R

dY5Rd58B9C
DI 7B8GF7AP3DI 7B8GF7AR

g_ 5Zd58BGB
DI 7B88A8CO3DI 7B88A8CP

g_ 5h a59GFG
DI 7B7E8C8R 2 P X

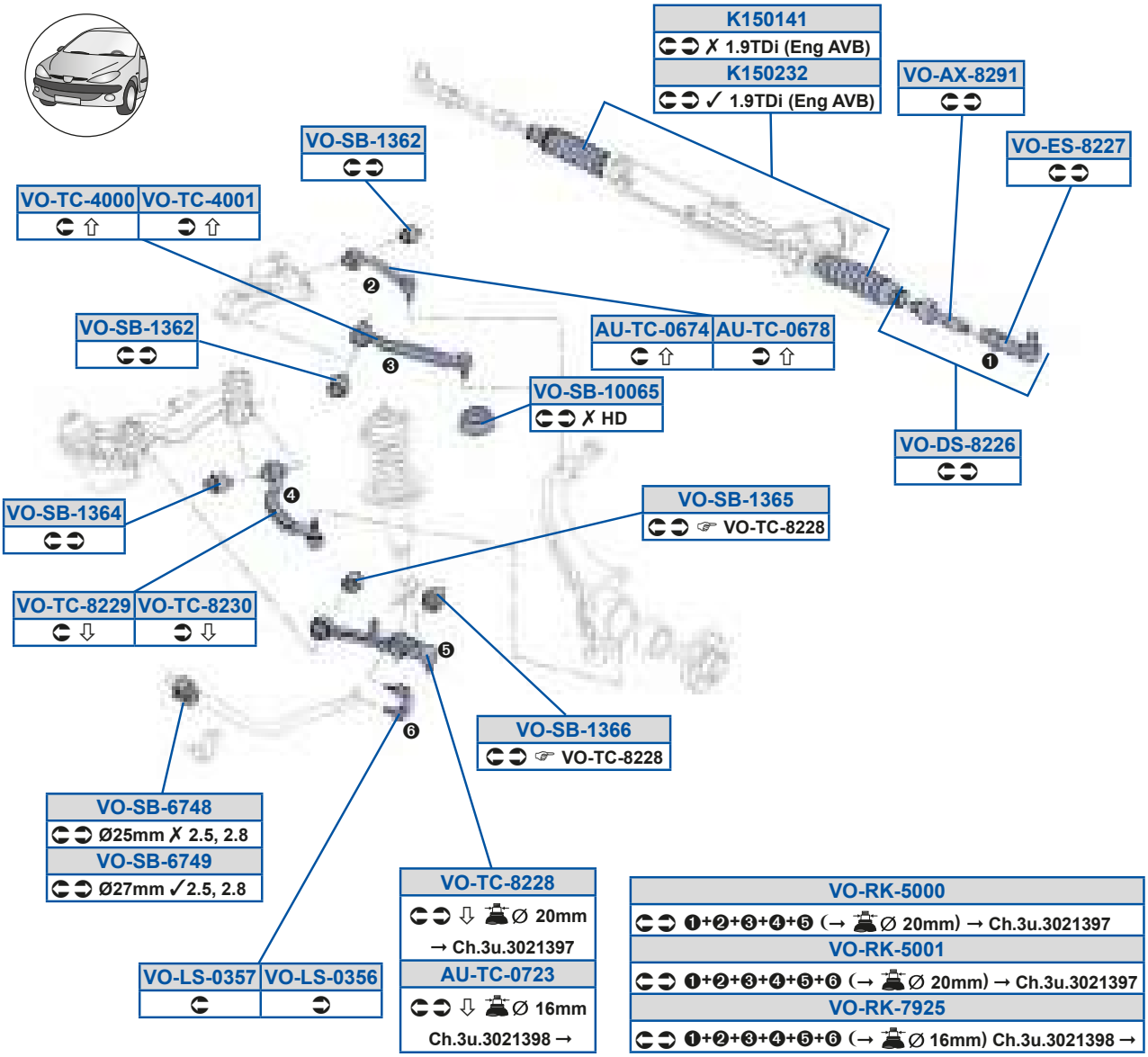
K150141
✗ 1.9TDi (Eng AVB)
K150232
✓ 1.9TDi (Eng AVB)
VO-AX-8291
VO-ES-8227
VO-SB-1362
VO-TC-4000
VO-TC-4001
VO-SB-1362
AU-TC-0674
AU-TC-0678
VO-SB-10065
✗ HD
VO-DS-8226
VO-SB-1364
VO-SB-1365
VO-TC-8228
VO-TC-8229
VO-TC-8230
VO-SB-1366
VO-TC-8228
VO-SB-6748
Ø25mm ✗ 2.5, 2.8
VO-SB-6749
Ø27mm ✓2.5, 2.8
VO-TC-8228
Ø 20mm
→ Ch.3u.3021397
AU-TC-0723
Ø 16mm
Ch.3u.3021398 →
VO-LS-0357
VO-LS-0356
VO-RK-5000
❶+❷+❸+❹+❺ (→ Ø 20mm) → Ch.3u.3021397
VO-RK-5001
❶+❷+❸+❹+❺+❻ (→ Ø 20mm) → Ch.3u.3021397
VO-RK-7925
❶+❷+❸+❹+❺+❻ (→ Ø 16mm) Ch.3u.3021398 →

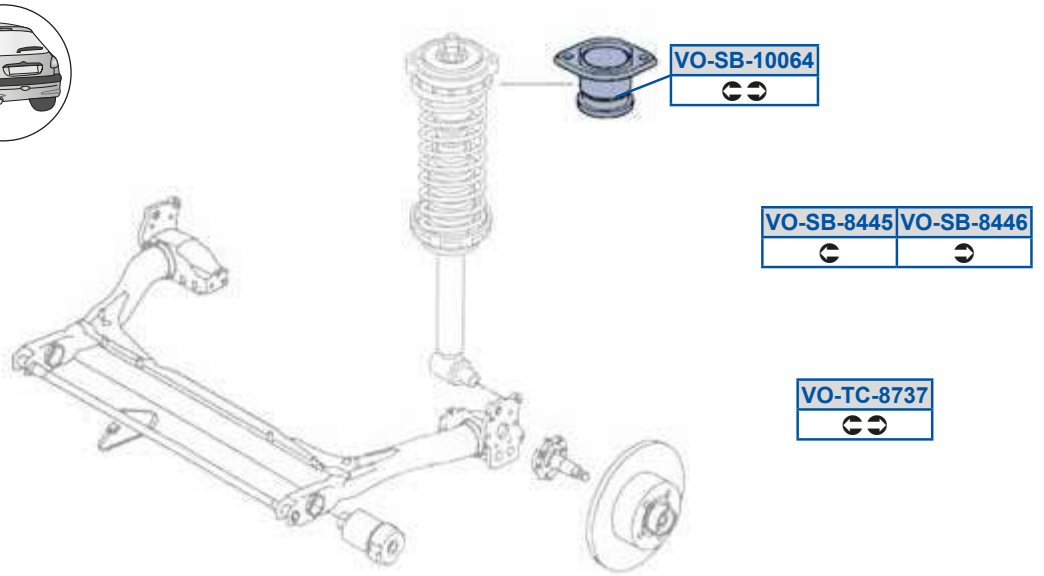
VO-SB-10064
VO-SB-8445
VO-SB-8446
VO-TC-8737

Of 5eQ58DEB
BR7B7EC7GY3FR7B7EC7G0

Of 5eQ58DEF
BR7B7EC87Y3FR7B7EC870

Of 5eQ58E>A
BP7B7E8C83BPAB7E8C80

Y9C89B9
BR7B8GFA8P3BR7B8GFA8R

Y9C8>A>
BR7B8GFA8S3BR7B8GFA8Y

g_ 5Oi 5F>G9
BR7B8GF78P /40

g_ 5Rd5F>>D
BP7B8GF78S3BP7B8GF78a

g_ 5Sd5F>>E
BR7B8GF88U3FS7B8GF88P

g_ 5Zd58ACD
FR7B88A8FR

g_ 5Zd58ACE
FR7B88A8ER

g_ 5cY5C888
FR7BGFGGF

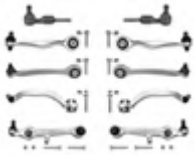

g_ 5cY5C889

g_ 5cY5EG>C
BPABGFGGF

g_ 5dP5988DB
AP7C8AACA

g_ 5dP5988DC
APEB89AEE0

g_ 5dP59AD>
BP7B7EC8C3BR7B7EC8CQ

g_ 5dP59ADB
BR7B7E8FA0P3BR7B7E8FA0Q

g_ 5dP59ADC
BR7B7E8F9S3BR7B7E8F9U

g_ 5dP59ADD
BR7B7E8F8T3BR7B7E8F8V

g_ 5dP5DEBF
BR7B88A9ES3BR7B88A9EU

g_ 5dP5DEBG
BR7B88A9ET3BR7B88A9EV

g_ 5dP5FBBC
BP7C78C98R3BP7C78C98S

g_ 5dP5FBBD
BP7C78C99R3BP7C78C99S

g_ 5eQ5B888
FR7B7EC7C03FR7B7EC7CP

g_ 5eQ5B889
FR7B7EC7D03FR7B7EC7DP

g_ 5eQ5F>>F
BR7B7E8C803BR7B7E8C8S

g_ 5eQ5F>>G
BR7B7EDGA0Q3BR7B7EDGAS

g_ 5eQ5F>A8
BR7B7EDGB0Q3BR7B7EDGBS

g_ 5eQ5FEAE
8Y7C7CA880038Y7C7CA880P

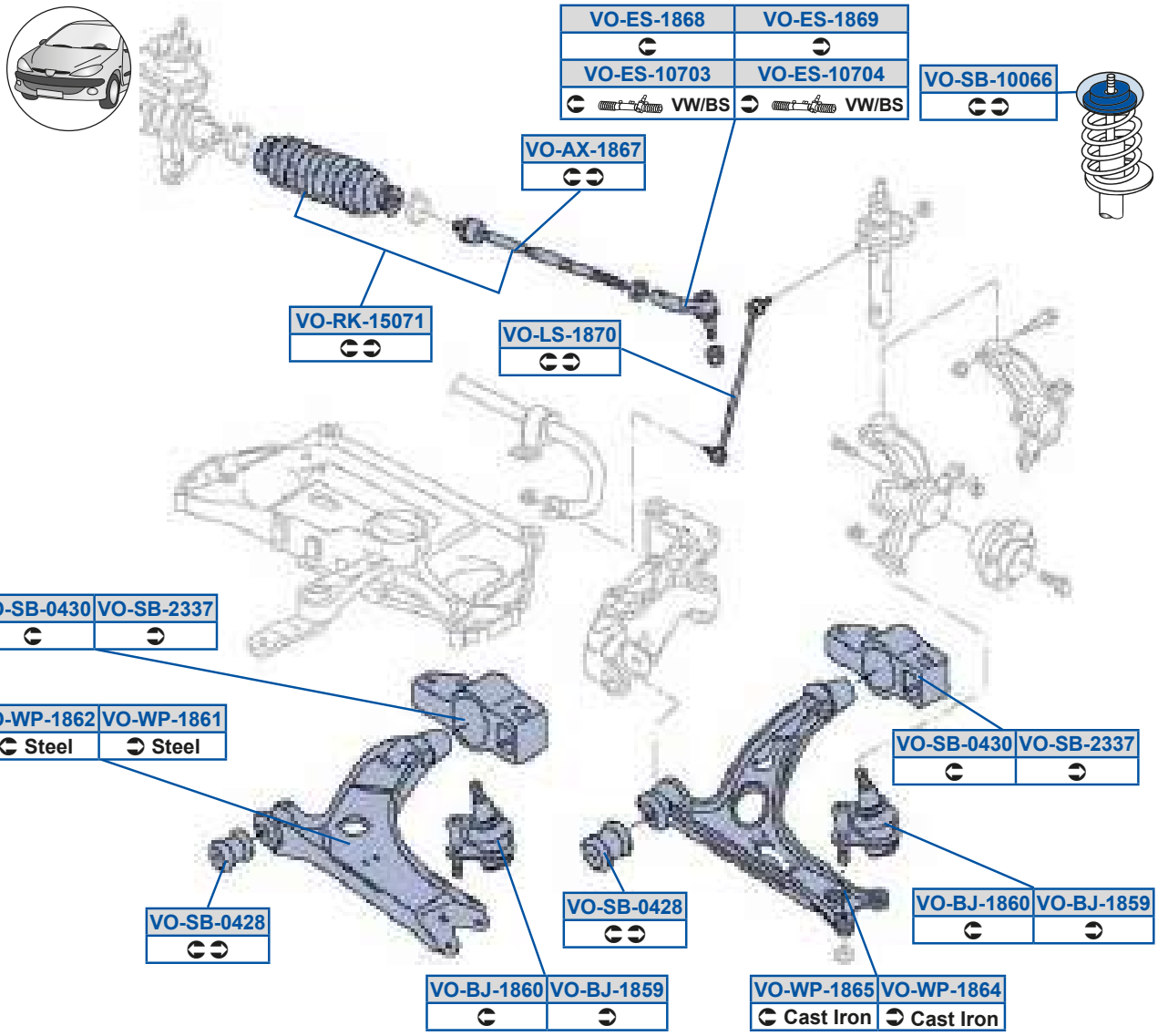
VO-ES-1868
VO-ES-1869
VO-ES-10703
VO-ES-10704
VW/BS
VW/BS
VO-SB-10066
VO-AX-1867
VO-RK-15071
VO-LS-1870
VO-SB-0430
VO-SB-2337
VO-WP-1862
Steel
VO-WP-1861
Steel
VO-SB-0430
VO-SB-2337
VO-SB-0428
VO-SB-0428
VO-BJ-1860
VO-BJ-1859
VO-BJ-1860
VO-BJ-1859
VO-WP-1865
Cast Iron
VO-WP-1864
Cast Iron

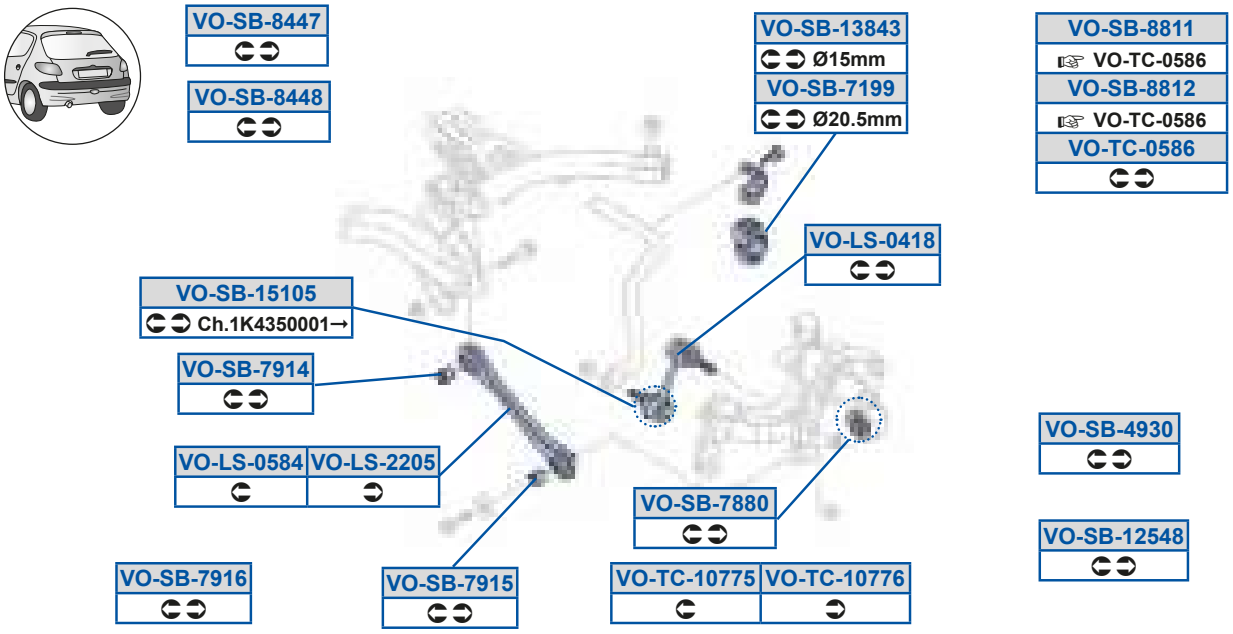
VO-SB-8447
VO-SB-8448
VO-SB-13843
Ø15mm
VO-SB-7199
Ø20.5mm
VO-SB-8811
VO-TC-0586
VO-SB-8812
VO-TC-0586
VO-TC-0586
VO-LS-0418
VO-SB-15105
Ch.1K4350001→
VO-SB-7914
VO-LS-0584
VO-LS-2205
VO-SB-4930
VO-SB-7880
VO-SB-12548
VO-SB-7916
VO-SB-7915
VO-TC-10775
VO-TC-10776

g_ 5Oi 59FDE
8Y7B9AF87O

g_ 5Zd58CFB
8Y7C78C9GS38Y7C78C9GT

g_ 5dP59AFBA
8Y7C88A9EPO

g_ 5dP5EG9D
8Y7C7C8E8Q38Y7C7C8EAQ

g_ 5PX59FCG
8Y7B7EADDP38Y7B7EADDQ

g_ 5Zd59FE8
8Y7B88A8CP38Y7B88A8CX

g_ 5dP59C98C
8Y7C7CBDCQ /40

g_ 5dP5FBBE
8Y7C7C8BCS38Y7C7C8BCU

g_ 5PX59FD8
8Y7B7EADCP38Y7B7EADCQ

g_ 5Zd5>>8C
8Y7C78CA7P38Y7C78CA7Q

g_ 5dP5>AAE
8Y78GG9A9U38Y78GG9A9X

g_ 5dP5FBBF
8Y7C7C8BCT38Y7C7C8BCV

g_ 5Sd598E8A
8Y7B9AF88Q38Y7B9AF88R

g_ 5c Y59C8E9
8Y7B9AF87O

g_ 5dP5BGA8
8Y7C7CCB8Q38Y7C7CCB8R

g_ 5dP5FF99
8Y7C7C9EGO

g_ 5Sd598E8B
8Y7B9AF89Q38Y7B9AF89R

g_ 5dP58B>F
8Y7B7E8F938Y7B7E8F9O

g_ 5dP5E9GG
8Y7C88A9EOn

g_ 5dP5FF9>
8Y7C7C97AO

g_ 5Sd59FDF
8Y7B9AF88Q38Y7B9AF88S

g_ 5dP58BA8
8Y78GG9A8U38Y78GG9A8X

g_ 5dP5EFF8
8Y7C7CCCA38Y7C7CCCAO

g_ 5eQ58CFD
8Y7C7CA9AV38Y7C7CA9Ad

g_ 5Sd59FDG
8Y7B9AF89Q38Y7B9AF89S

g_ 5dP5988DD
Dd7B899BGQ

g_ 5dP5EG9B
8Y7C78CB8Q

g_ 5eQ598EEC
8Y7C7C99AS38Y7C7C99AV

g_ 5Zd58B9F
8Y7C7CBDCO038Y7C7CBDCQ

g_ 5dP59>CBF
8Y7C7CCCA38Y7C7CCCAO

g_ 5dP5EG9C
8Y7C7CCBAO

g_ 5eQ598EED
8Y7C7C99BS38Y7C7C99BV

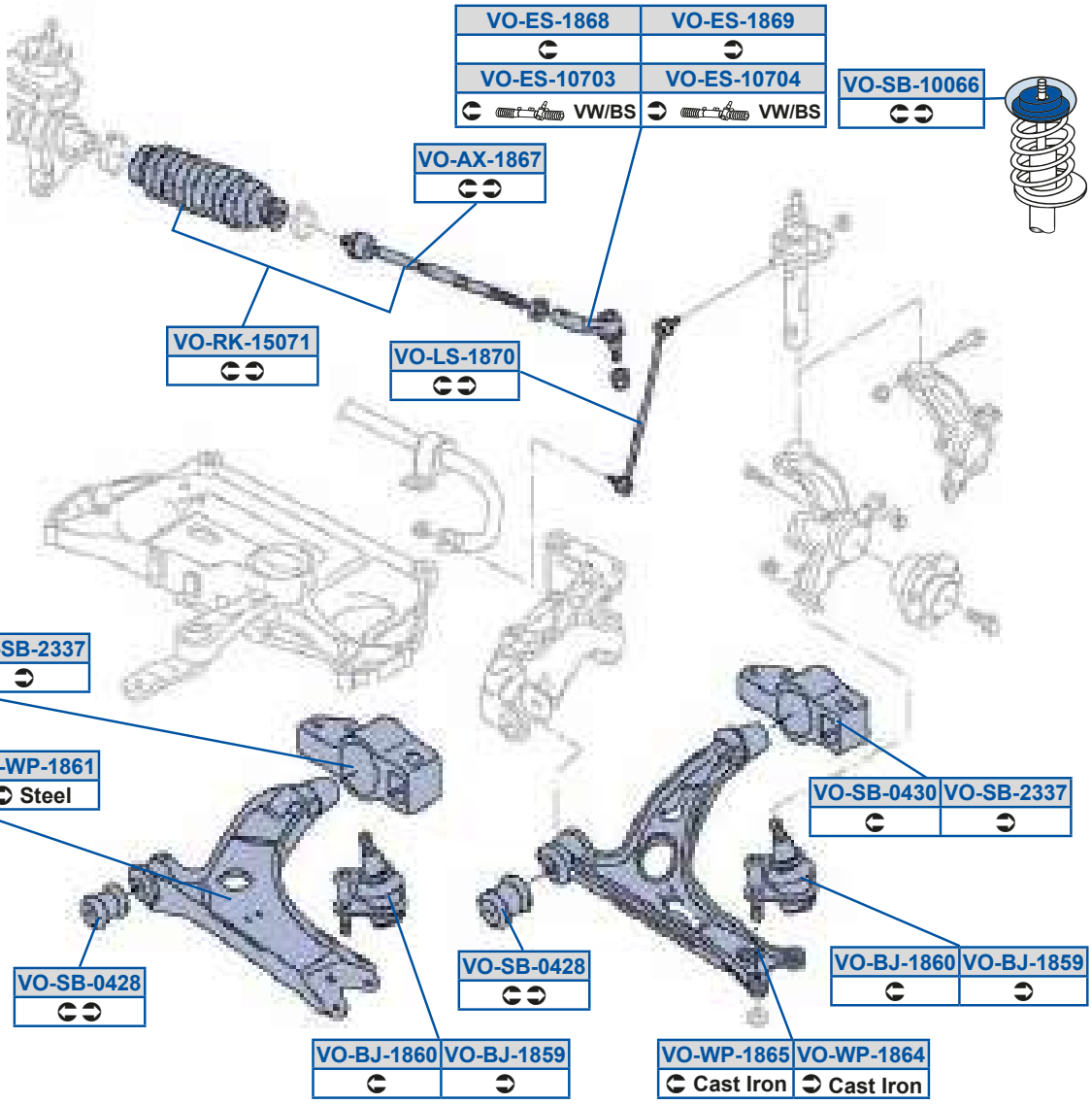
VO-ES-1868
VO-ES-1869
VO-ES-10703
VW/BS
VO-ES-10704
VW/BS
VO-SB-10066
VO-AX-1867
VO-RK-15071
VO-LS-1870
VO-SB-0430
VO-SB-2337
VO-WP-1862
Steel
VO-WP-1861
Steel
VO-SB-0430
VO-SB-2337
VO-SB-0428
VO-SB-0428
VO-BJ-1860
VO-BJ-1859
VO-BJ-1860
VO-BJ-1859
VO-WP-1865
Cast Iron
VO-WP-1864
Cast Iron

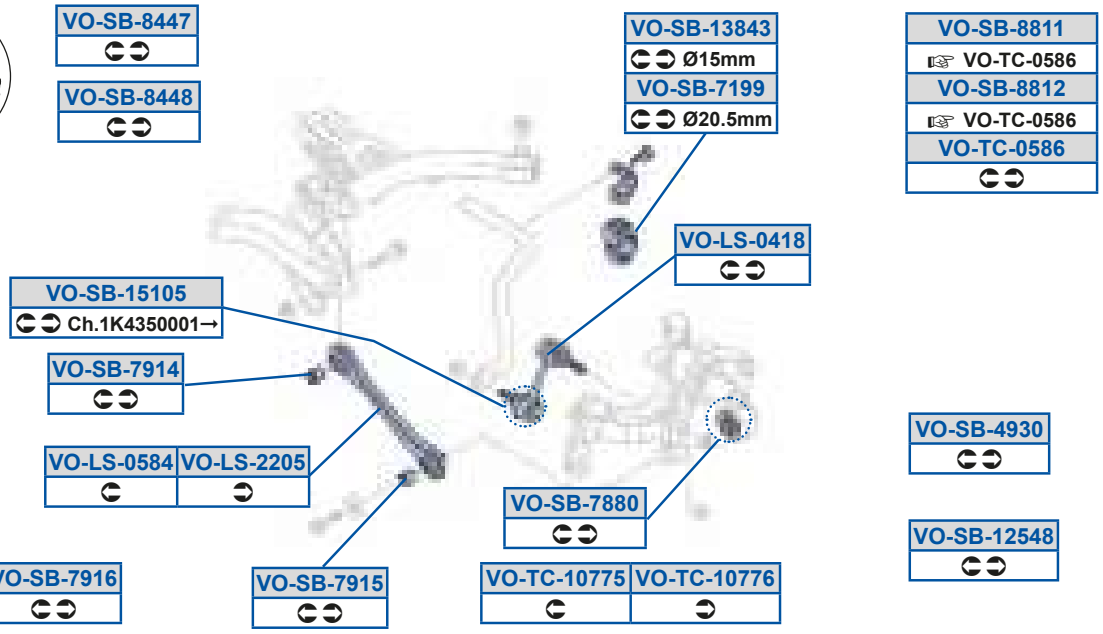
VO-SB-8447
VO-SB-8448
VO-SB-13843
Ø15mm
VO-SB-7199
Ø20.5mm
VO-SB-8811
VO-TC-0586
VO-SB-8812
VO-TC-0586
VO-TC-0586
VO-LS-0418
VO-SB-15105
Ch.1K4350001→
VO-SB-7914
VO-LS-0584
VO-LS-2205
VO-SB-4930
VO-SB-7880
VO-SB-12548
VO-SB-7916
VO-SB-7915
VO-TC-10775
VO-TC-10776

g_ 5h a59FD9

8Y7B7E8C90O38Y7B7E8C90V

g_ 5h a59FD>

8Y7B7E8C80O38Y7B7E8C80V

g_ 5h a59FDB

8Y7B7E8C90Q38Y7B7E8C9a

g_ 5h a59FDC

8Y7B7E8C80Q38Y7B7E8C8t

kSeWCZ1	8C78G		

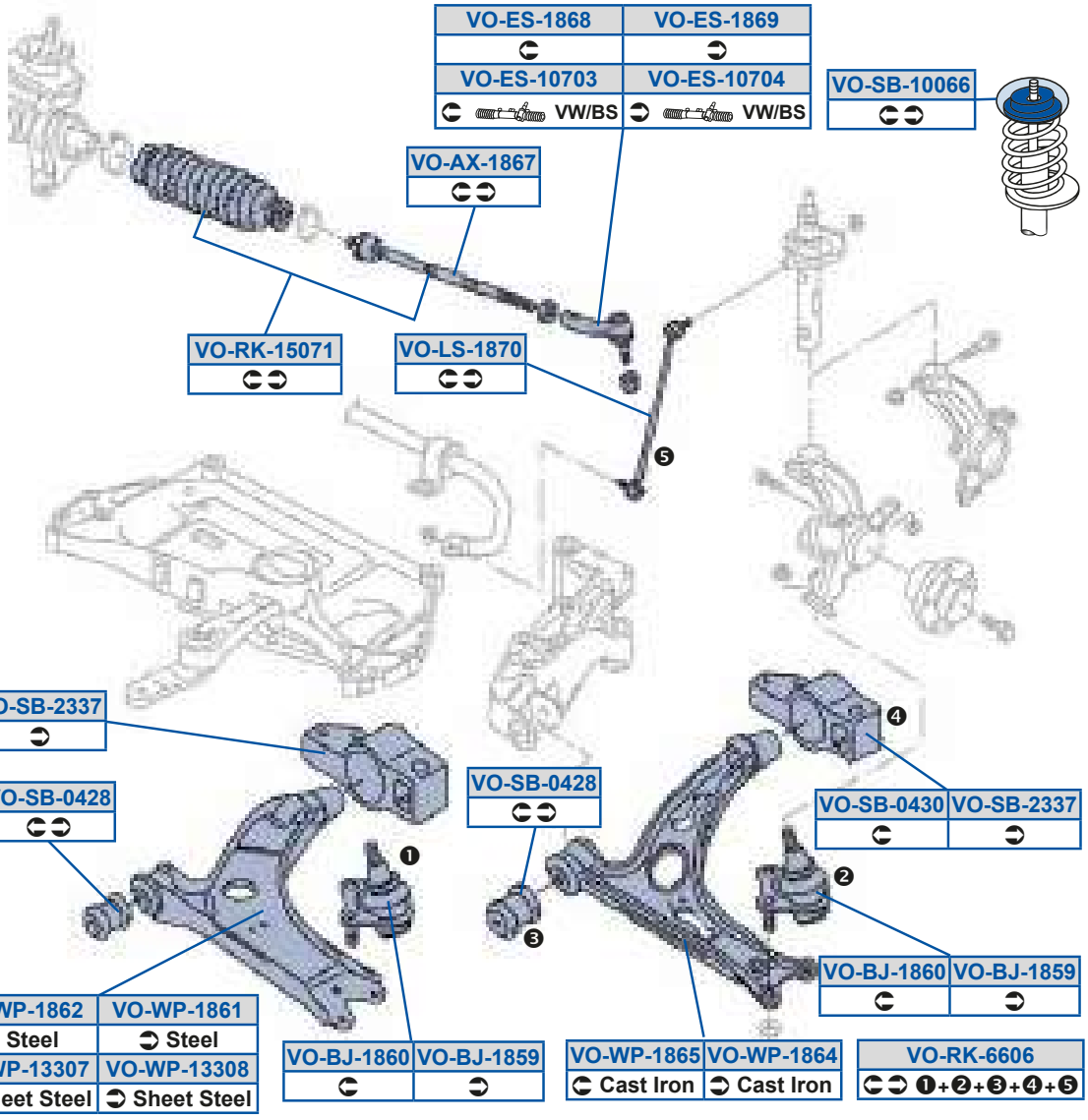

✗ 4x4

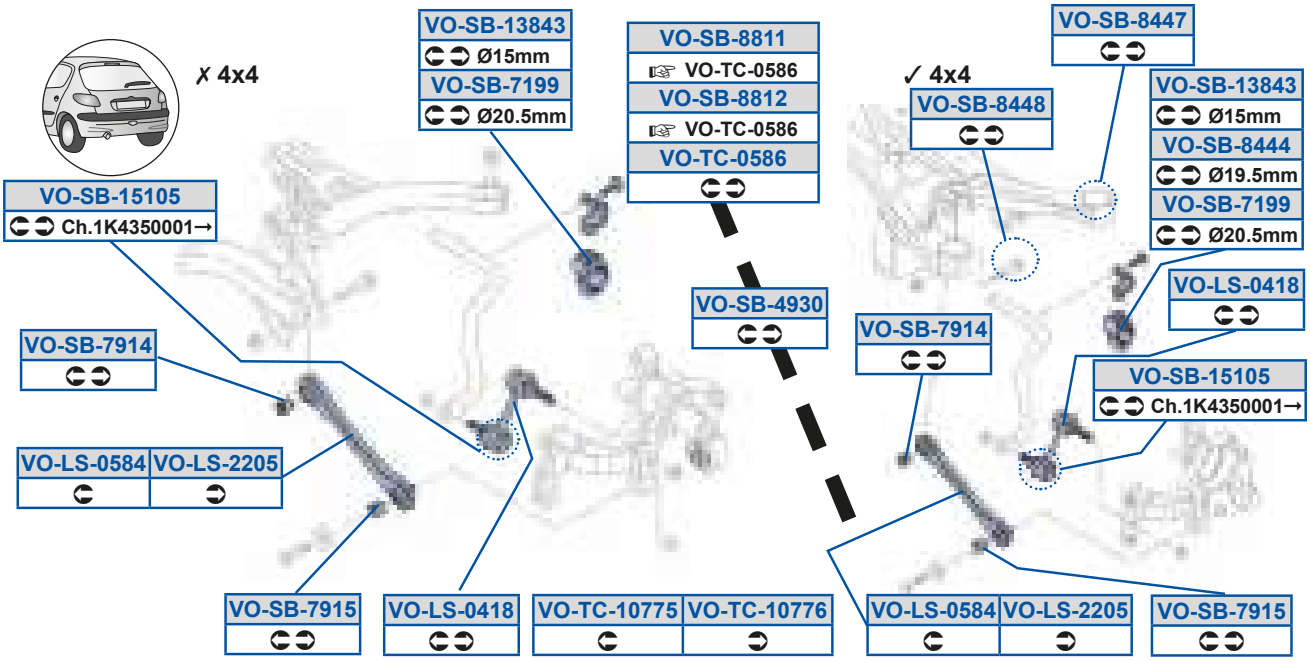

MOOG

g_ 5Oi 59FDE
8Y7B9AF87O

g_ 5Zd58CFB
8Y7C78C9GS38Y7C78C9GT

g_ 5dP59AFBA
8Y7C88A9EPO

g_ 5dP5FBBE
8Y7C7C8BCS38Y7C7C8BCU

g_ 5PX59FCG
8Y7B7EADDP38Y7B7EADDQ

g_ 5Zd59FE8
8Y7B88A8CP38Y7B88A8CX

g_ 5dP59C98C
8Y7C7CBDCQ /40

g_ 5dP5FBBF
8Y7C7C8BCT38Y7C7C8BCV

g_ 5PX59FD8
8Y7B7EADCP38Y7B7EADCQ

g_ 5Zd5>>8C
8Y7C78CA7P38Y7C78CA7Q

g_ 5dP5>AAE
8Y78GG9A9U38Y78GG9A9X

g_ 5dP5FF99
8Y7C7C9EGO

g_ 5Sd598E8A
8Y7B9AF88Q38Y7B9AF88R

g_ 5cY59C8E9
8Y7B9AF87O

g_ 5dP5BGA8
8Y7C7CCB8Q38Y7C7CCB8R

g_ 5eQ58CFD
8Y7C7CA9AV38Y7C7CA9Ad

g_ 5Sd598E8B
8Y7B9AF89Q38Y7B9AF89R

g_ 5cY5DD8D

g_ 5dP5E9GG
8Y7C88A9EOn

g_ 5eQ598EEC
8Y7C7C99AS38Y7C7C99AV

g_ 5Sd59FDF
8Y7B9AF88Q38Y7B9AF88S

g_ 5dP58B>F
8Y7B7E8F938Y7B7E8F9O

g_ 5dP5EFF8
8Y7C7CCCA38Y7C7CCCAO

g_ 5eQ598EED
8Y7C7C99BS38Y7C7C99BV

g_ 5Sd59FDG
8Y7B9AF89Q38Y7B9AF89S

g_ 5dP58BA8
8Y78GG9A8U38Y78GG9A8X

g_ 5dP5EG9C
8Y7C7CCBAO

g_ 5h a59AA8E
8Y7B7E8C8PP38Y7B7E8C8PS

g_ 5Zd58B9F
8Y7C7CBDCO038Y7C7CBDCQ

g_ 5dP5988DD
Dd7B899BGQ

g_ 5dP5FBBB
8Y7C88A9EOI

g_ 5h a59AA8F
8Y7B7E8C9PP38Y7B7E8C9PS

kSeWCZ1	8C78G		

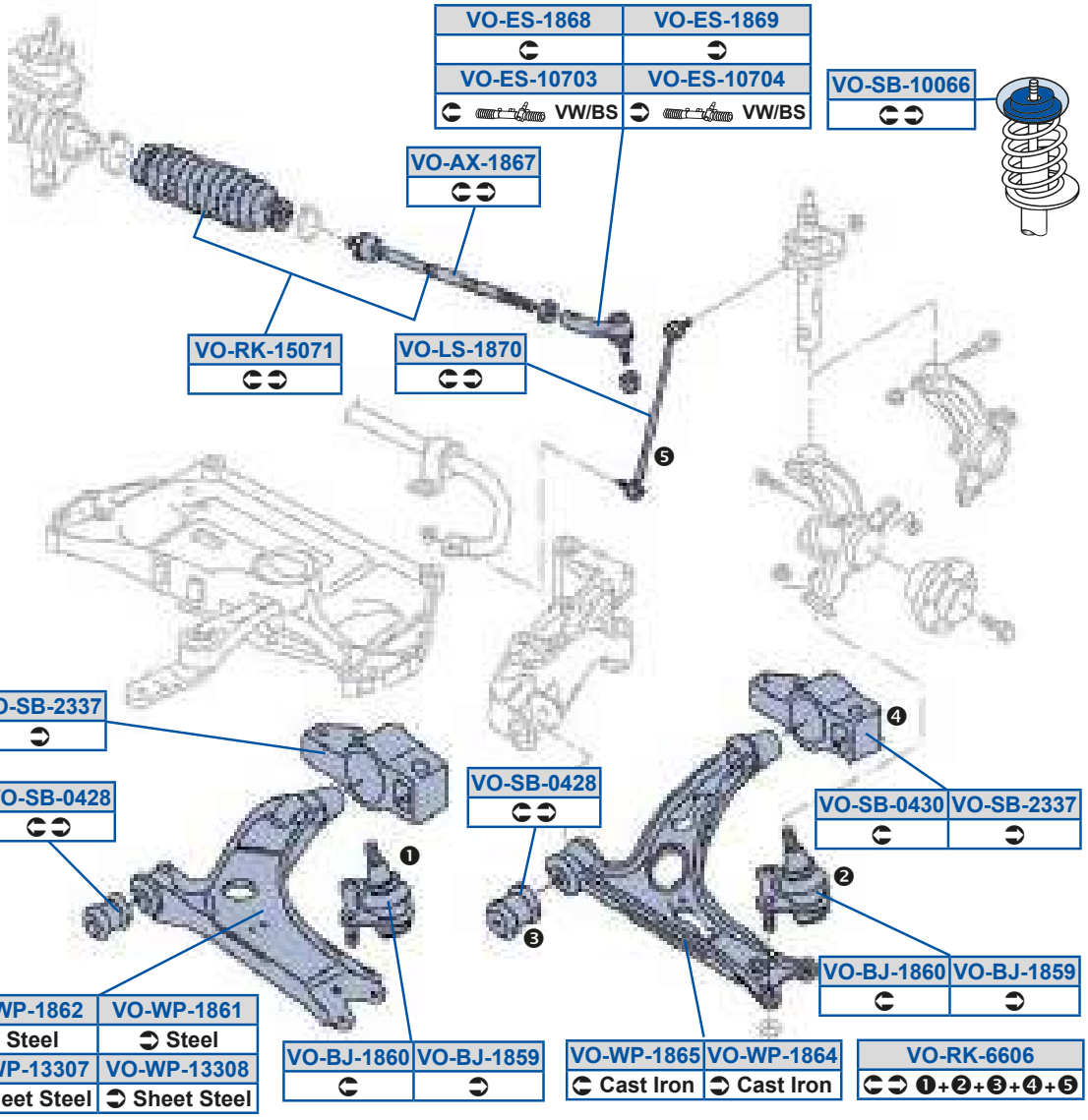

✗ 4x4

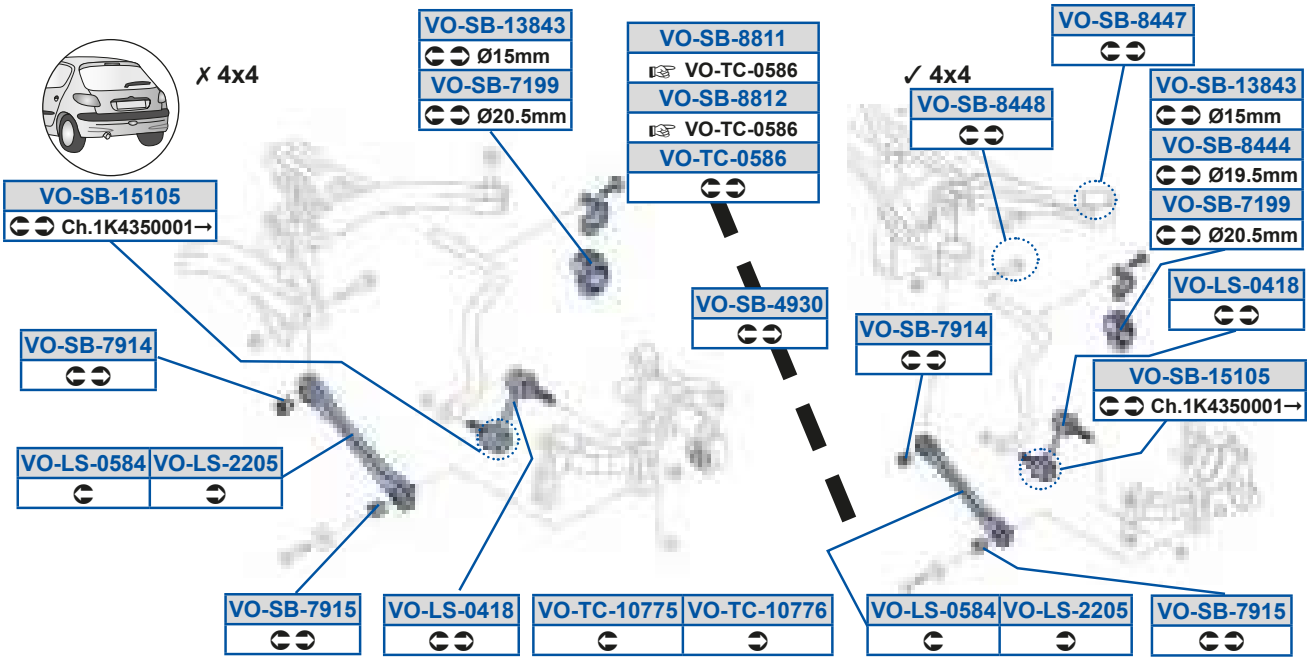

MOOG

g_ 5h a59FD9

8Y7B7E8C90O38Y7B7E8C90V

g_ 5h a59FD>

8Y7B7E8C80O38Y7B7E8C80V

g_ 5h a59FDB

8Y7B7E8C90Q38Y7B7E8C9a

g_ 5h a59FDC

8Y7B7E8C80Q38Y7B7E8C8t

d[Oce

QOPcW OBC81	8A788	8978B	QWk5Q_f aS OBC81	8E7GF	8978B
T_ceh _ Qtu é OBC81	8978B	8978E	T_ceh _ Q x OBC81	8978B	8; 78E

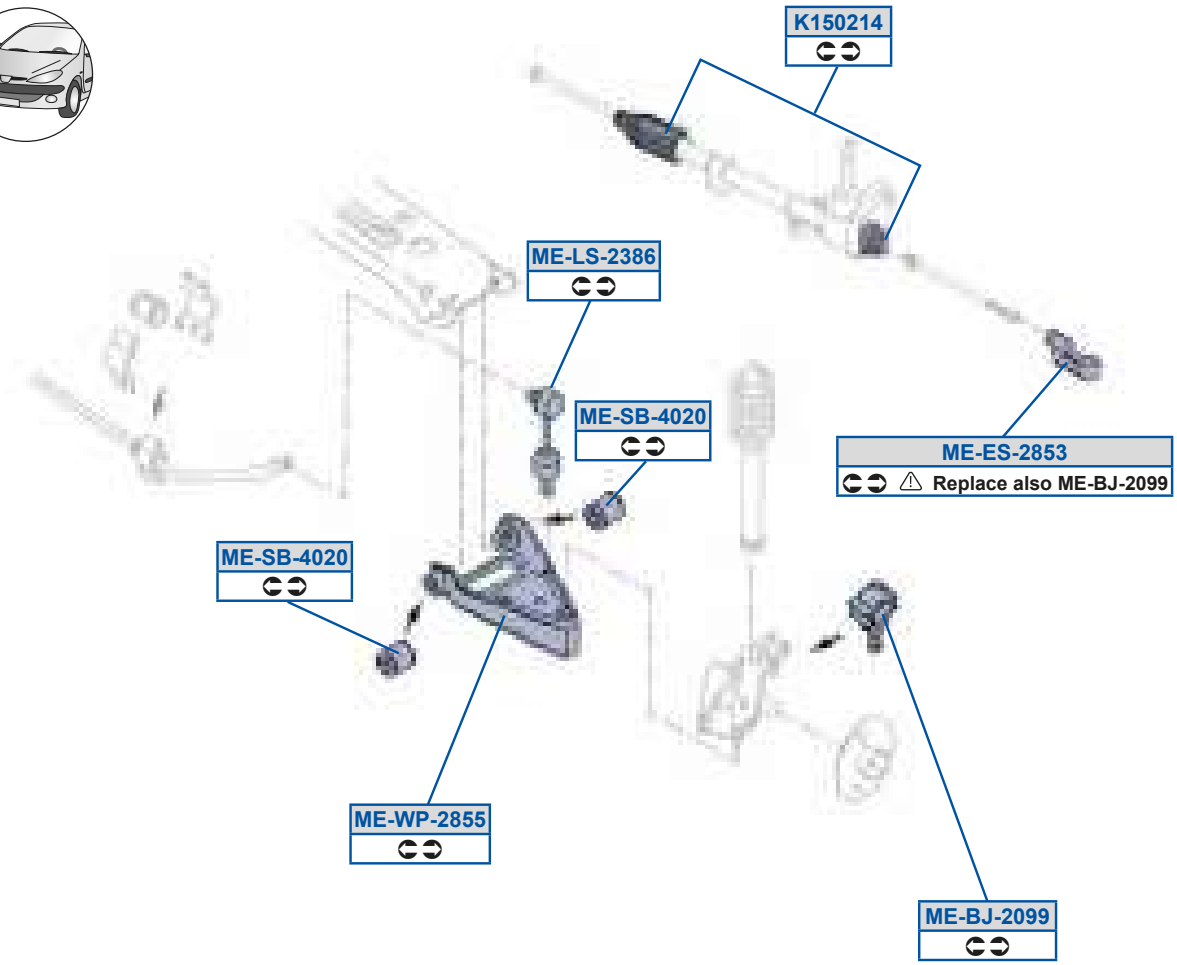

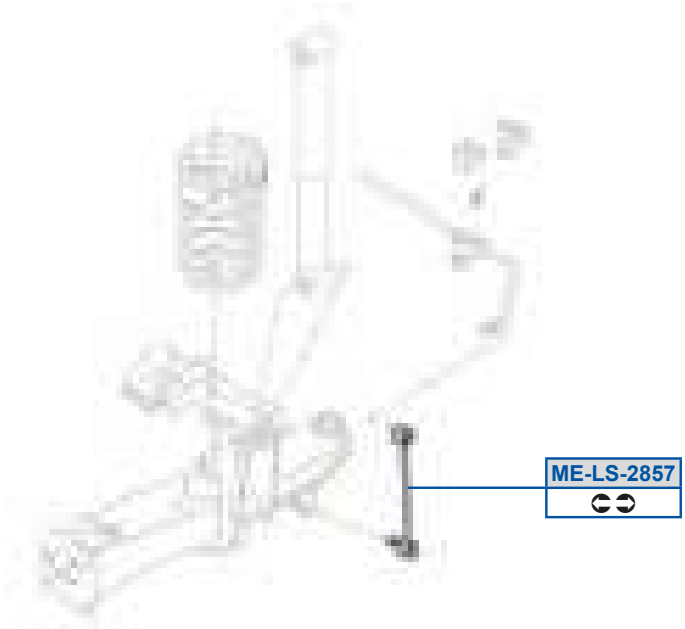

MOOG

Y9C8>9B
BC8BD777GD

[S5PX5>8GG
77799E8 77A77777C

[S5Sd5>FCA
777BFFE 77D777777

[S5Zd5>AFD
777C879 77C777777

[S5Zd5>FCE
7778F79 77B777777

[S5dP5B8>8
777E778 77D777777

[S5h a5>FCC
777E778 77B777777

[S5h a5>FCD
7778EDC 77C777777

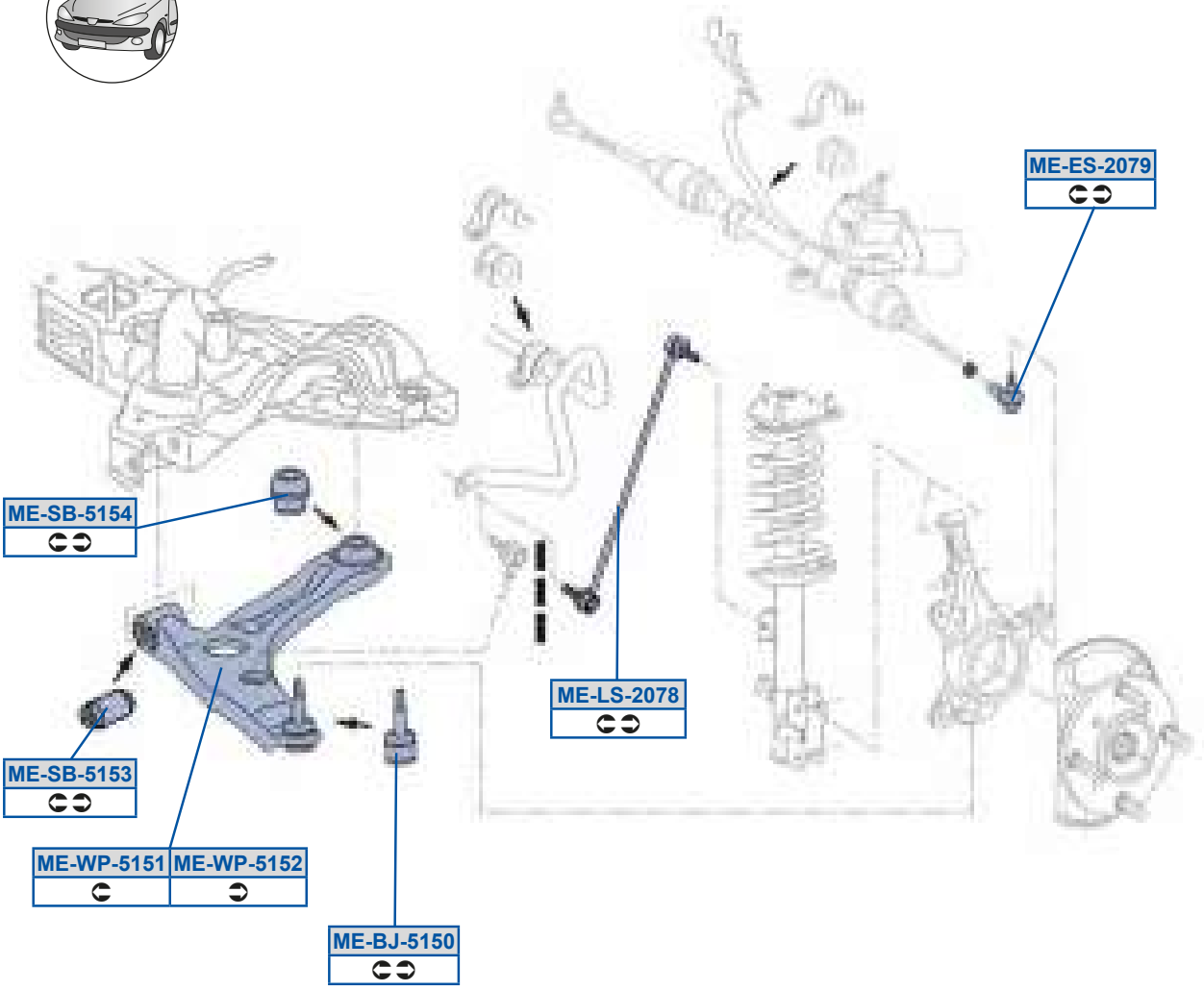
ME-ES-2079
ME-SB-5154
ME-LS-2078
ME-SB-5153
ME-WP-5151
ME-WP-5152
ME-BJ-5150

[S5PX5C9C8
BCBAA77E7E /40

[S5Sd5>8EG
BCBBD7797C

[S5Zd5>8EF
BCBA977787

[S5dP5C9CA
BCB AA7 7E 7E /40

[S5dP5C9CB
BCB AA7 7E 7E /40

[S5h a5C9C9
BCBAA77E7E3BCBAA78G7E

[S5h a5C9C>
BCBAA77F7E3BCBAA7977E

d[Oce T w 0897>88B5L 8D7>88D1IBCBn

T_ceh _ Qtu é 0BC91	8978E	T_ceh _ Q x 0BC91	8978E

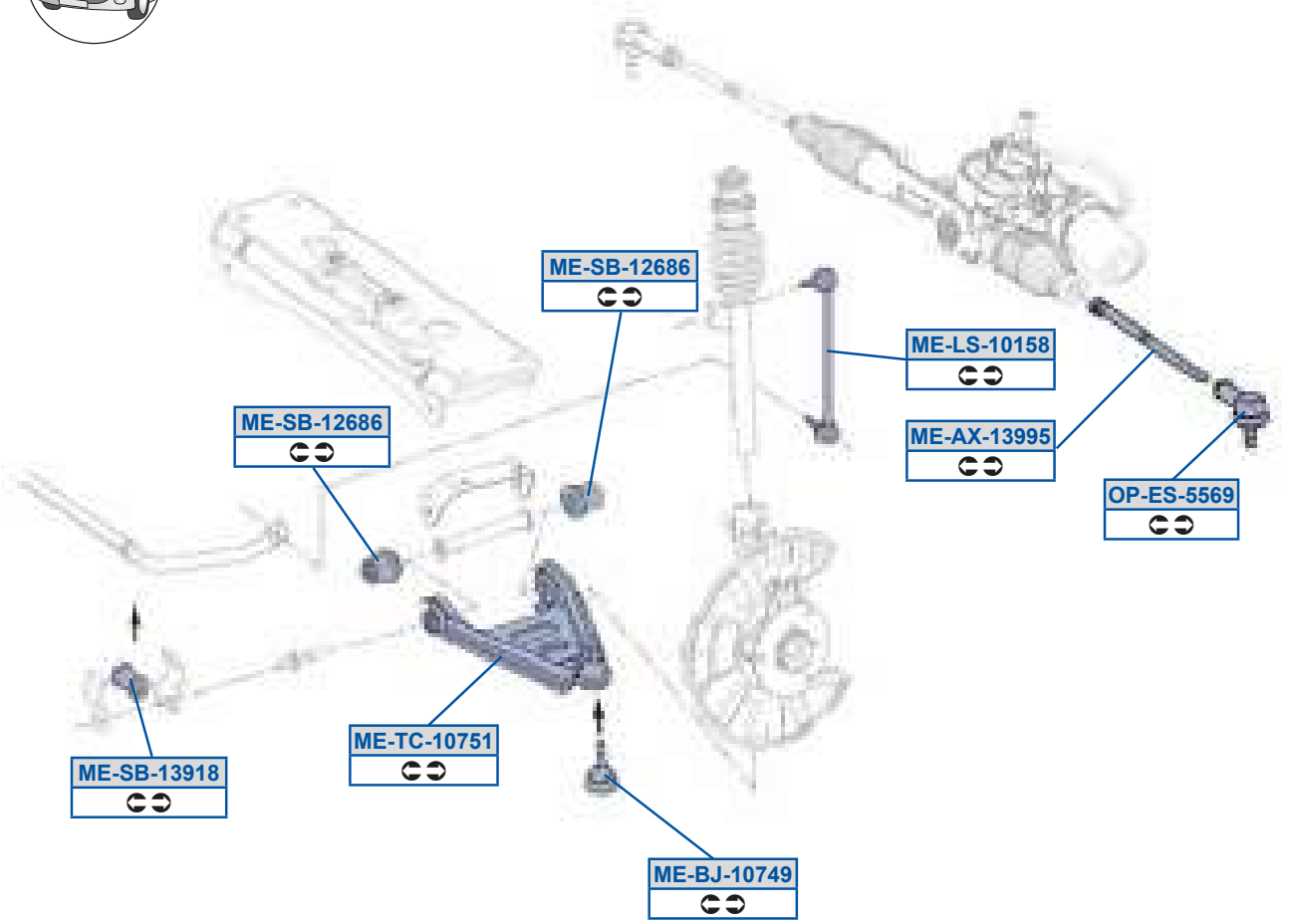

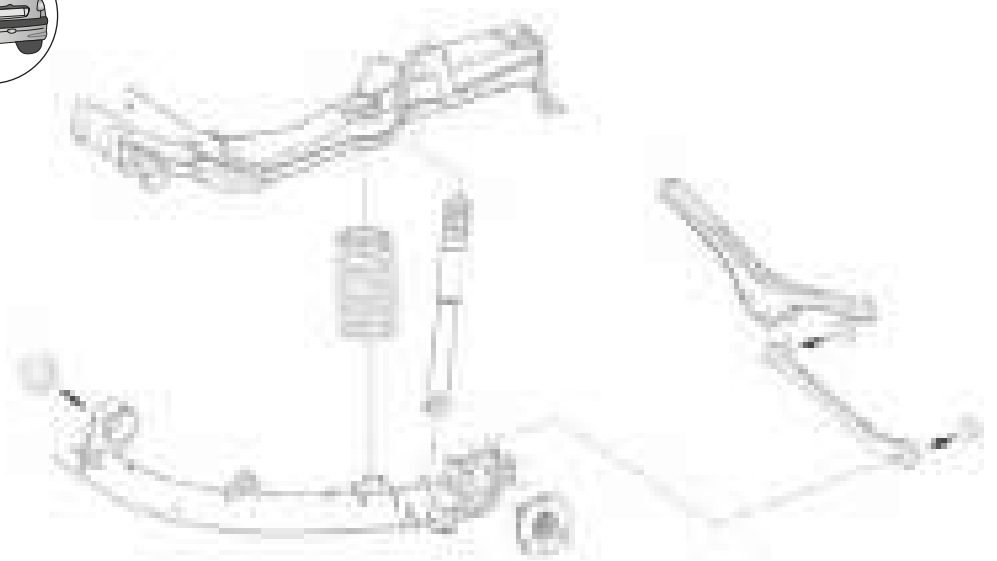

[S5Oi 59AGGC
BC8BD777C8 /40

[S5PX598EBG
BC8 AA7 7787 /40

[S5Zd5989CF
BC8A9778FG3BC8A9778FGo8

[S5dP59>DFD
BC8AA77787 /40

[S5dP59AG9F
BC8A9A77FC3BC8A9A78FC

[S5eQ598EC9
BC8AA77787

_ a5Sd5CCDG
BC8AAF77AE3BC8AAF78AE

ddO] Uj _] U

Y_cO] R_ OYX1	9; 7GD 9978D	Y_cO] R_ Qtu é OYX1	9; 7GD 9978D
[f dd_ OTX1	8A7GA 8G78E		

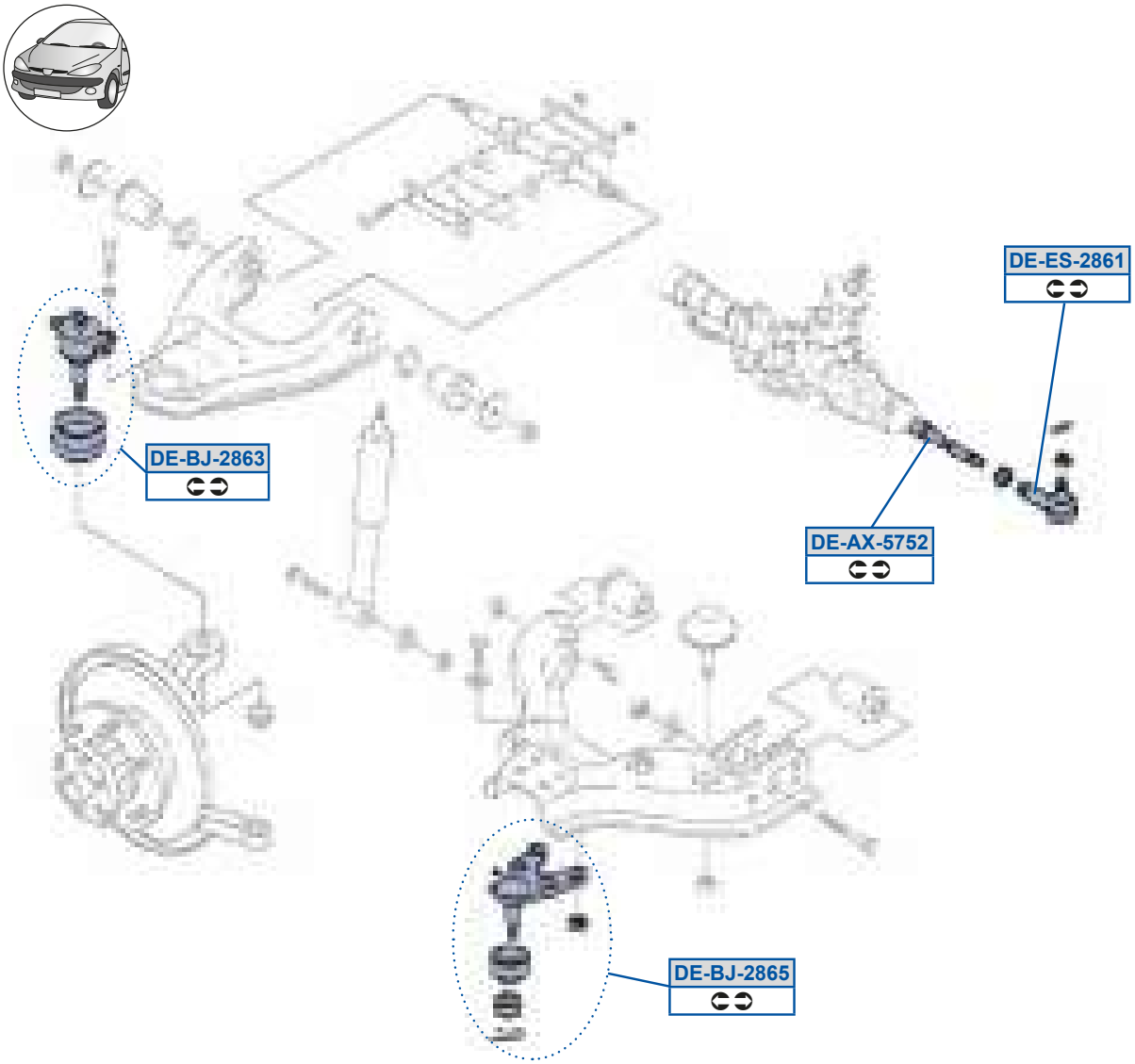

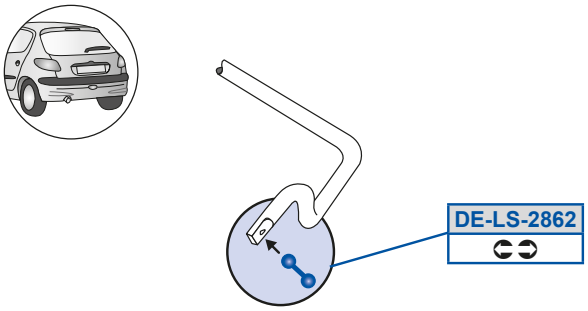

MOOG

RS5Oi 5CEC>

GCGC9GA7

RS5PX5>FDA

BBBA77A7873BBBA77A788

RS5PX5>FDC

BBC7C7C7773BBC7C7C778

RS5Sd5>FD9

BDDD77CC783BDDD77CC79

RS5Zd5>FD>

BBEC77C7773BBEC77C778

T_cSdeSc 0dTr1	8E7GE 8G78;	T_cSdeSc 0dUr1	8E78; 9; 78G

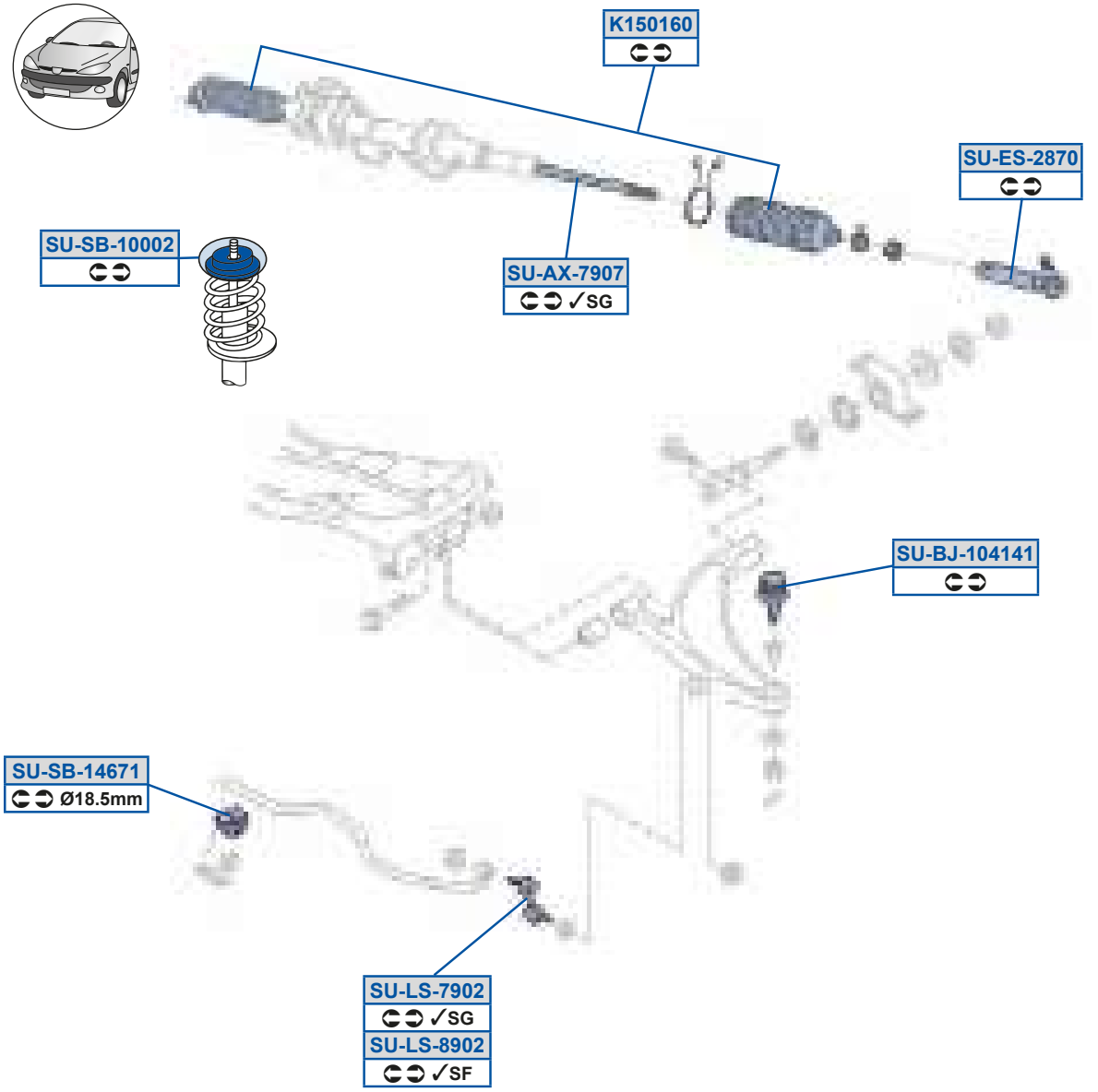

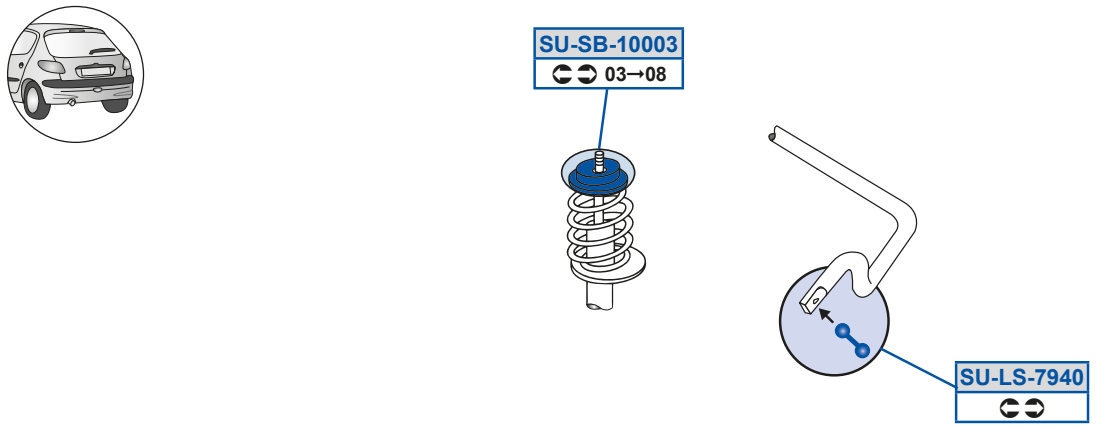

MOOG

Y9C89D8
AB8ACTQ777

df 5Oi 5EG8E
AB8D7OS7773AB8D7OS778

df 5PX598B9B9
9797DOX7773987DEUO7C7

df 5Sd5>FE8
AB8B8OO7B83AB8B8OO7B9

df 5Zd5EG8>
97BE7TS777397BE7oO777

df 5Zd5EGB8
97BE7oO787397BE7oO788

df 5Zd5FG8>
97B9700779397B970077A

df 5dP59888>
97A9700877397A9700887

df 5dP59888A
97AE7TS877397AE7TS887

df 5dP59BDE9
97B78OQ788

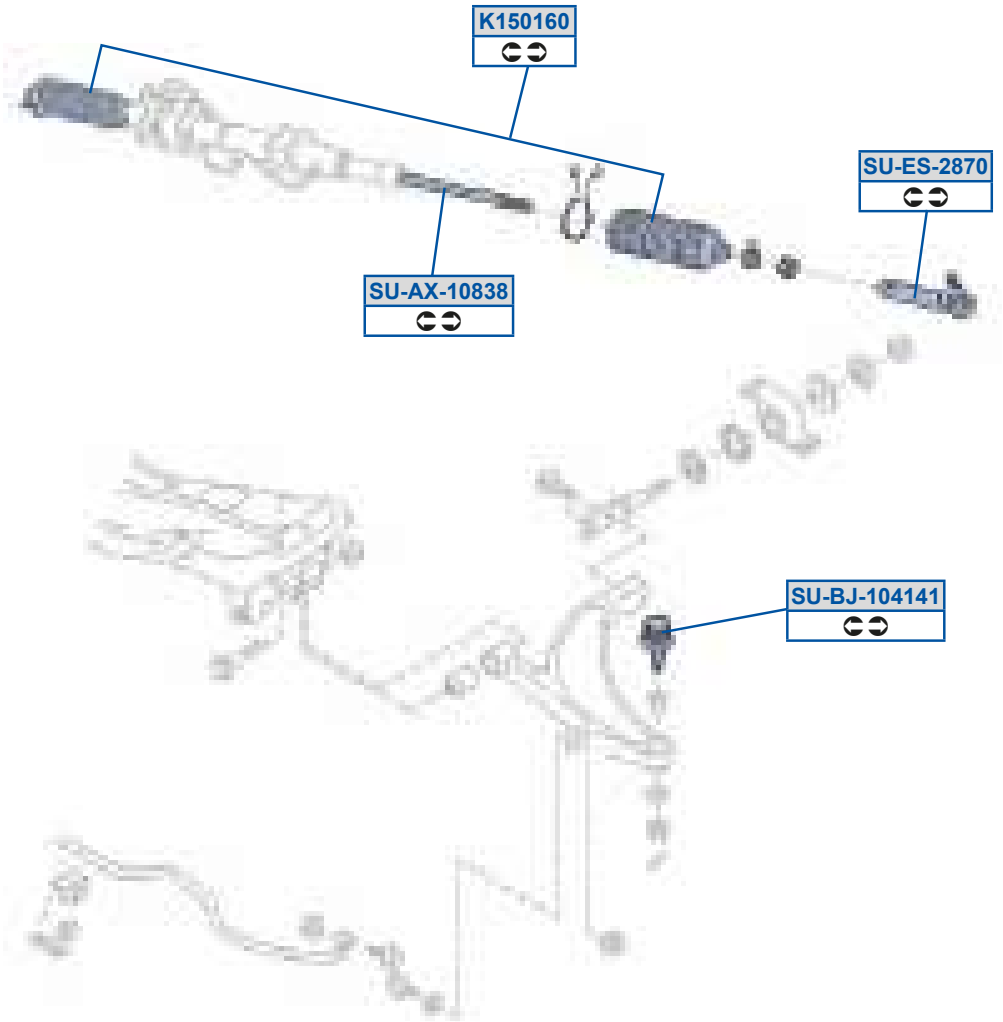

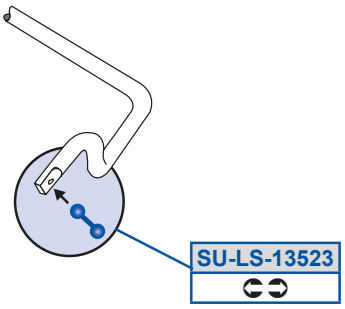

MOOG

Y9C89D8
AB8ACTQ777

df 5Oi 598FAF
AB8D7 O787

df 5PX598B9B9
9797DOX7773987DEUO7C7

df 5Sd5>FE8
AB8B8OO7B83AB8B8OO7B9

df 5Zd59AC>A
97BE7OX787

T v v Œ97>88F 5L1ldVn

df POcf

df POcf

W acSI O Q x OJTQ1	897GA 9; 788	W acSI O S t x OJR4UU1	98788 9; 78F
W acSI O S t x OJT1	8F7G; 9; 788	W acSI O S t x OJU1	98788 9; 78E
W acSI O dt OJQ1	8F7G; 9; 788	W acSI O dt OJR4UU1	98788 8D78G

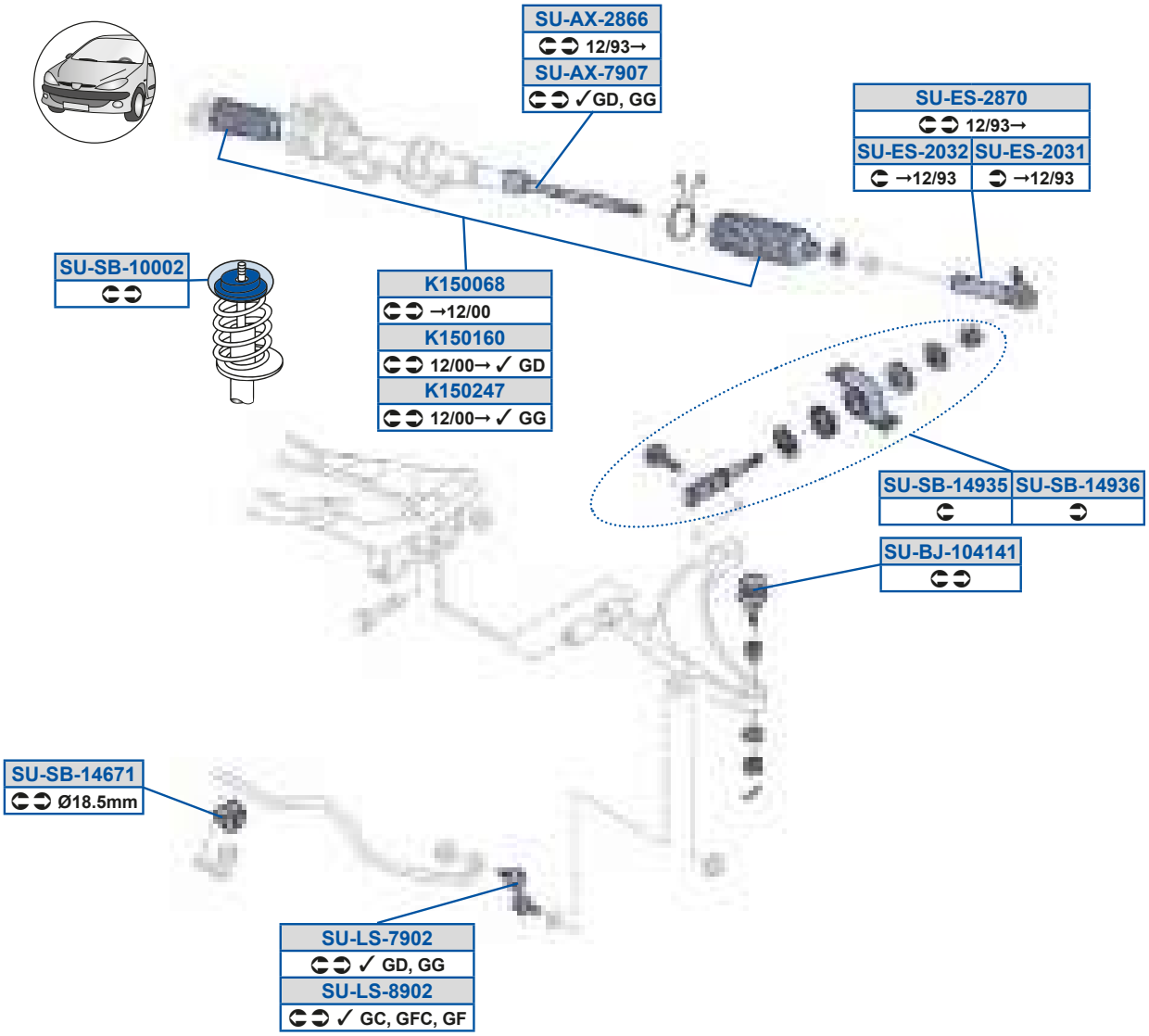

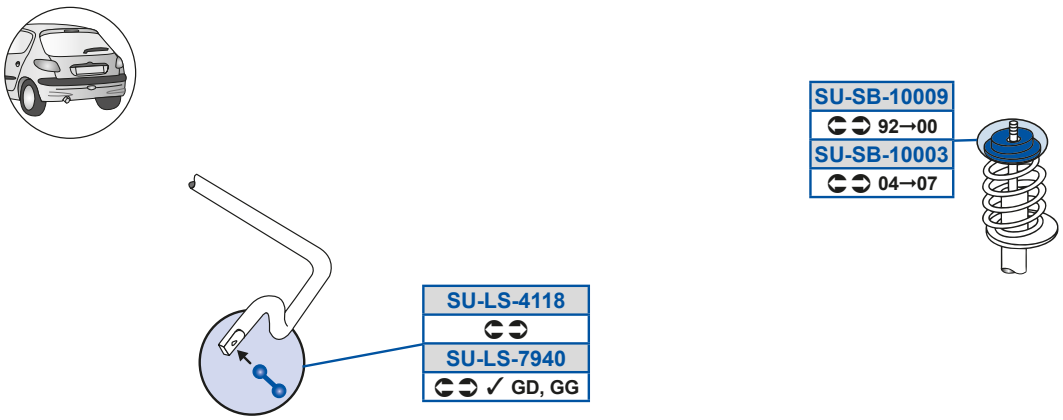

MOOG

Y9C88DF
A89A9U07B73AB8AET0777

Y9C89D8
AB8ACTQ777

Y9C8>BE
AB8AEo0777

df 5Oi 5>FDD
AB8B7007873AB8B700788

df 5Oi 5EG8E
AB8D70S7773AB8D70S778

df 5PX598B9B9
9797D0X7773987DEU07C7

df 5Sd5>FE8
AB8B8007B83AB8B8007B9

df 5Zd5B99F
97BF800777397BF800778

df 5Zd5EG8>
97BE7TS777397BE7o0777

df 5Zd5EGB8
97BE7o0787397BE7o0788

df 5Zd5FG8>
97B9700779397B970077A

df 5dP59888>
97A9700877397A9700887

df 5dP59888A
97AE7TS877397AE7TS887

df 5dP59888G

df 5dP59BDE9
97B780Q788

df 5dP59BGAC
97978007D8397978T07D7

df 5dP59BGAD
97978T07E7

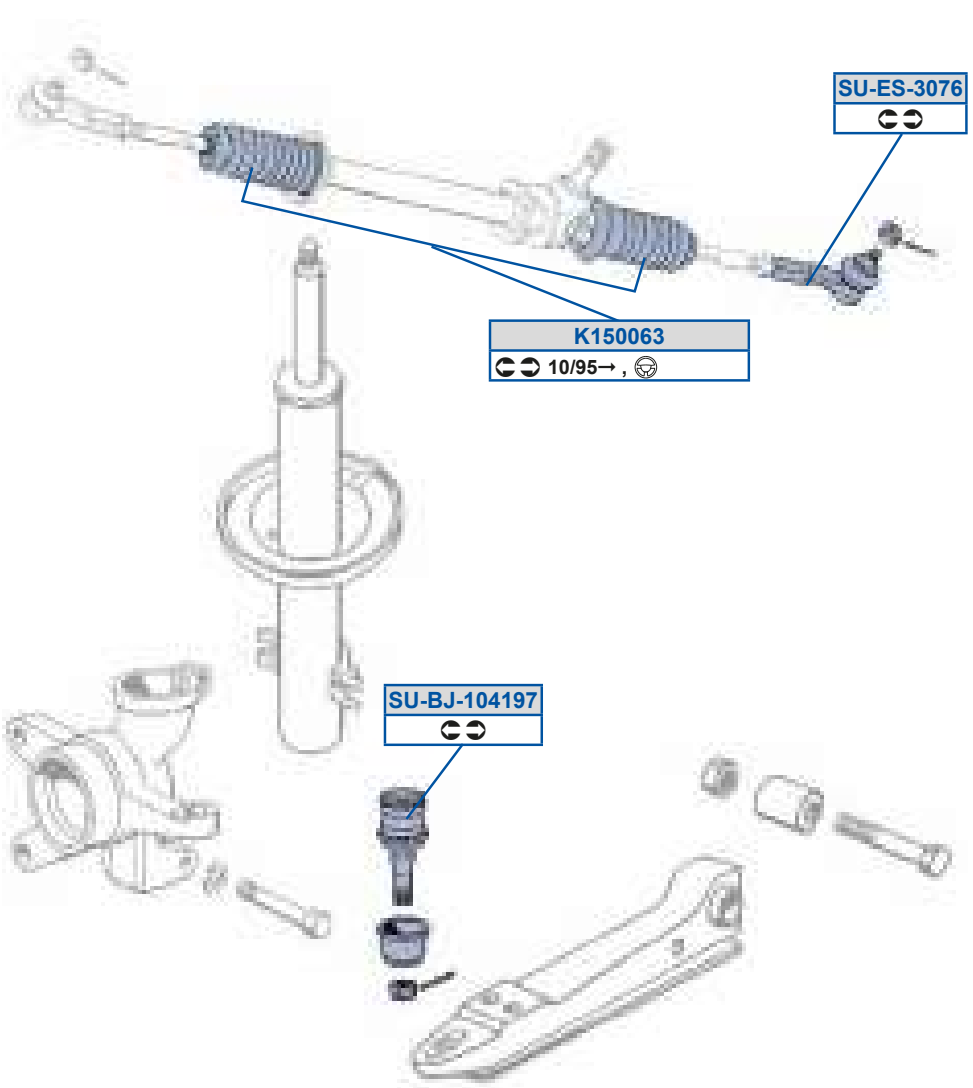

MOOG

Y9C88DA

0778A989C30778A989D

df 5PX598B9GE

E987DE7973E987DE798

df 5Sd5A8ED

EA8A97797

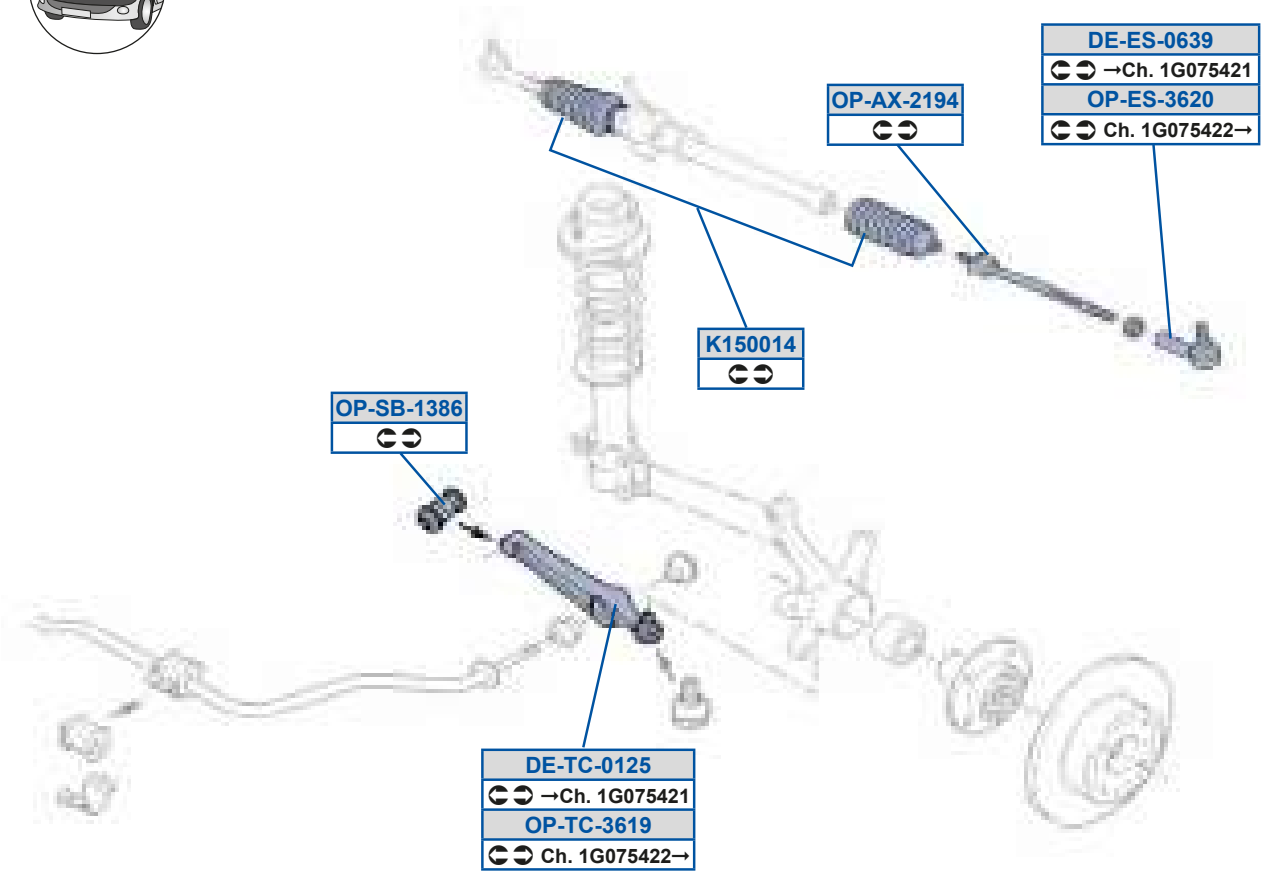
DE-ES-0639
→Ch. 1G075421
OP-ES-3620
Ch. 1G075422→
OP-AX-2194
K150014
OP-SB-1386
DE-TC-0125
→Ch. 1G075421
OP-TC-3619
Ch. 1G075422→

MOOG

RS5Sd58DAG
BE7CDCC

RS5eQ589>C
G97FGFE

Y9C889B
9D78779G

_ a5Oi 5>9GB
BFFA7FDU77

_ a5Sd5AD>8
BFF87FAS79

_ a5dP59AFD
BC9D8EE087

_ a5eQ5AD9G
BC977FCS77

df POcf

ZSUOQk WQPQ1	897FG	8F7GB	ZSUOQk WS t x OPQ4PXT1	897FG	8F7GB
ZSUOQk WOPR4PU1	8E7GB	8A7GG	ZSUOQk WS t x OPR4PU1	8; 7GB	9; 7GG
ZSUOQk WS t x OPU1	8E7GB	997GF	ZSUOQk WOPS4PV1	987GF	8F78A
ZSUOQk WS t x OPS4PV1	987GF	8F78A	_f ePOQY OPS4PV1	987GF	8F78A

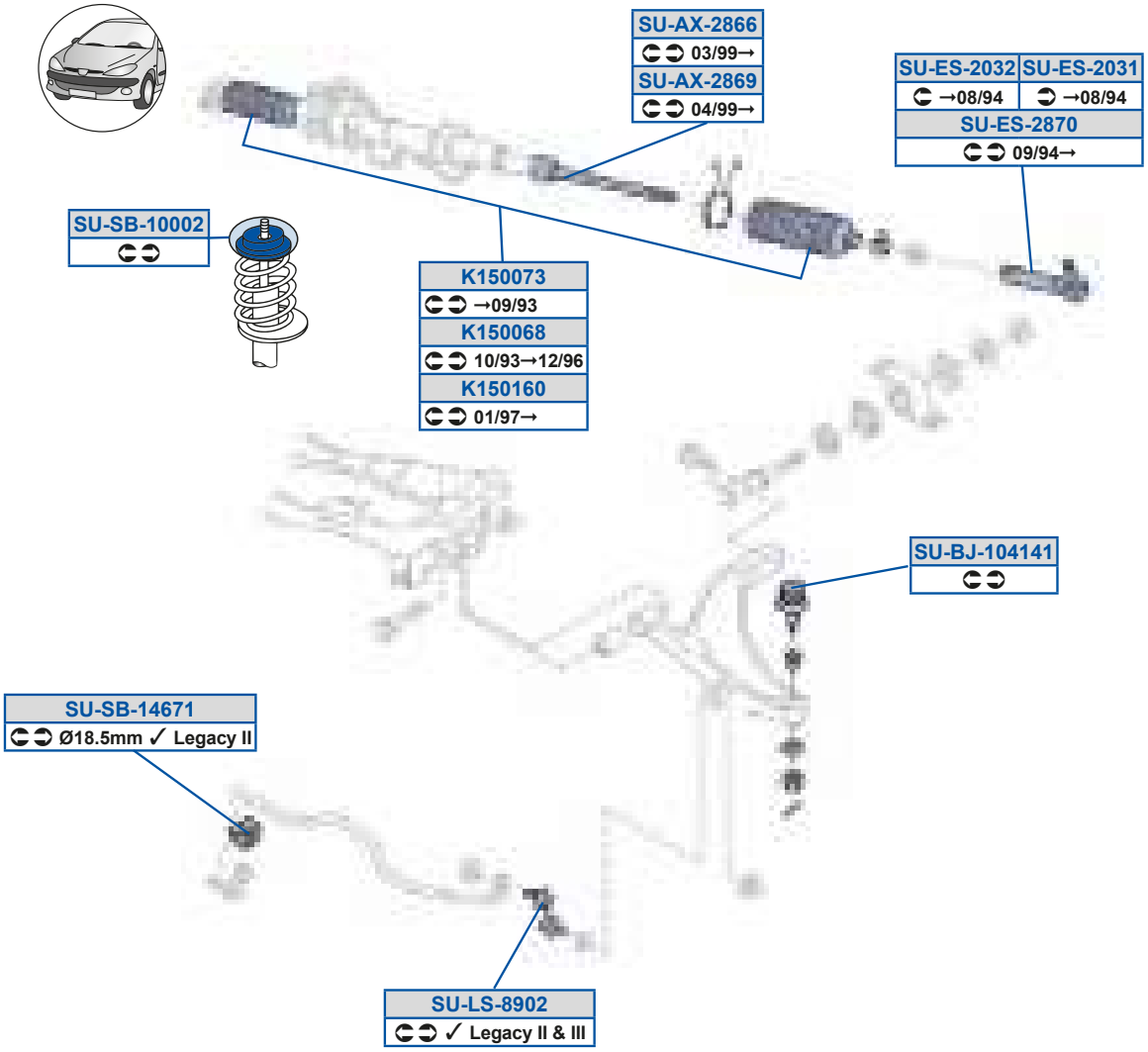

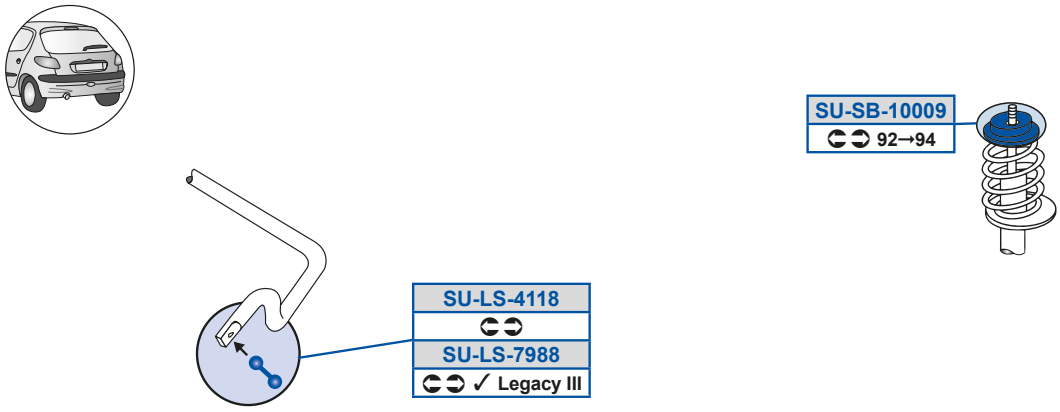

MOOG

Y9C88DF
A89A9U07B73AB8AET0777

df 5Zd5EGFF
97BE70S777397BE70S778

Y9C89D8
AB8ACTQ777

df 5Zd5FG8>
97B9700779397B970077A

df 5Oi 59BEDF
AB8D70S7873AB8DS0S787

df 5dP59888>
97A9700877397A9700887

df 5Oi 5>FDD
AB8B7007873AB8B700788

df 5dP59BDE9
97B780Q788

df 5Oi 5>FDG
A8A87U08C93AB8B700787

df 5PX598B9B9
9797D0X7773987DEU07C7

df 5Sd5>FE8
AB8B8007B83AB8B8007B9

df 5Zd5B99F
97BF800777397BF800778

ZSUOQk Wy	8G78A 9; 78G	ZSUOQk Wy S t x OP9Ar 1	8G78A 9; 78G
_f ePOQY OPZ4Pa1	8G78A 8G78G		

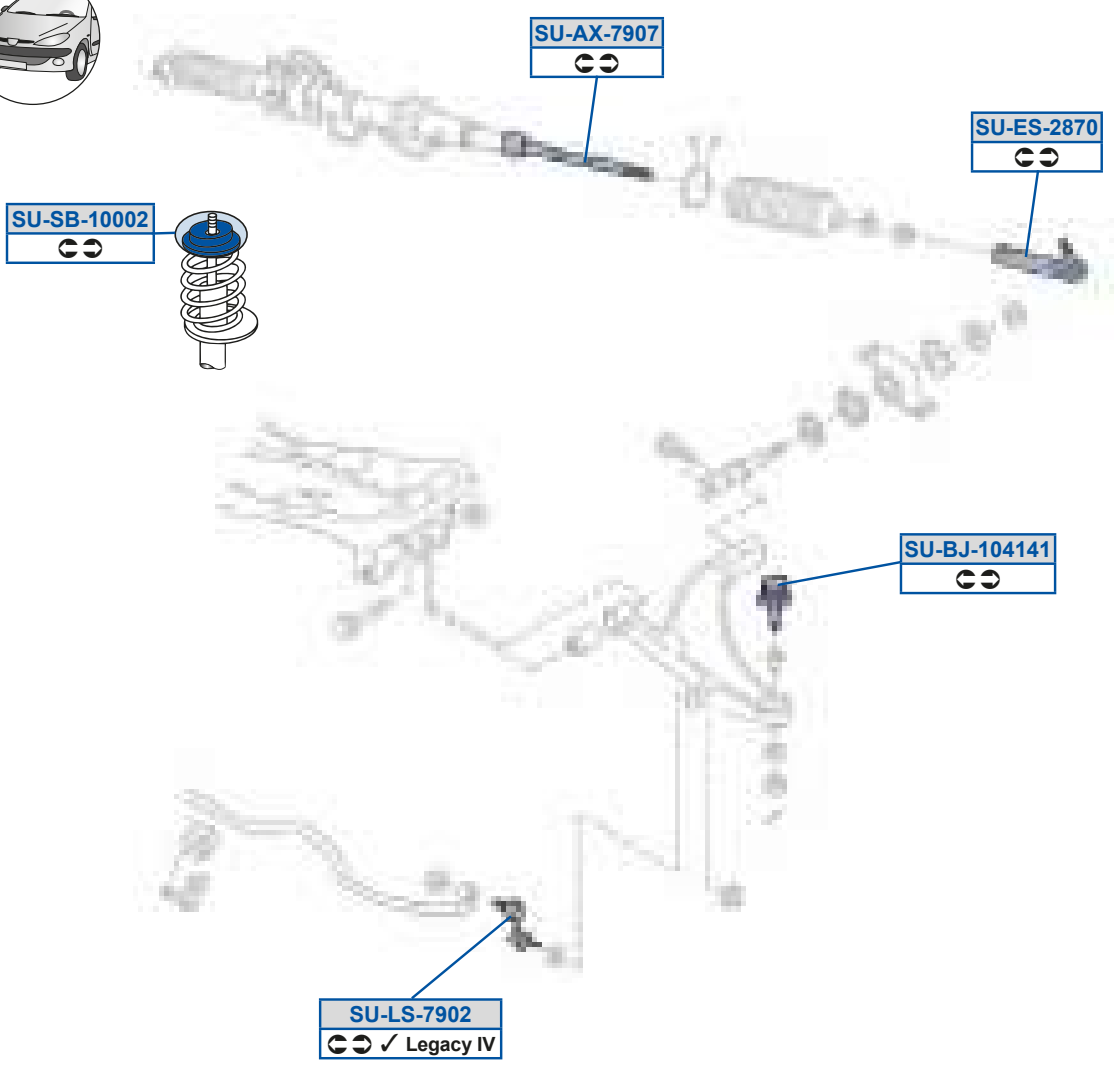

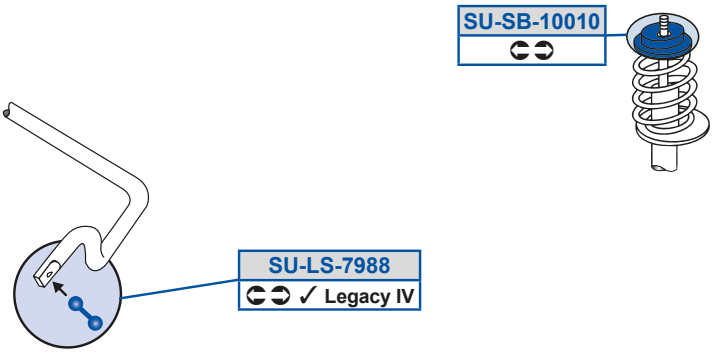

df 5Oi 5EG8E
AB8D70S7773AB8D70S778

df 5PX598B9B9
9797D0X7773987DEU07C7

df 5Sd5>FE8
AB8B8007B83AB8B8007B9

df 5Zd5EG8>
97BE7TS777397BE7o0777

df 5Zd5EGFF
97BE70S777397BE70S778

df 5dP59888>
97A9700877397A9700887

df 5dP598898
97AE70S770397AEC0S770

df kf YW

OZe_ Vt vÉut v	8G7FC 997GA	OZe_ OST1	8G7GB 8D78;
OZe_ OBd1	8D7F; 9; 7FC	OZe_ WWOST1	8G7GB 8D78;

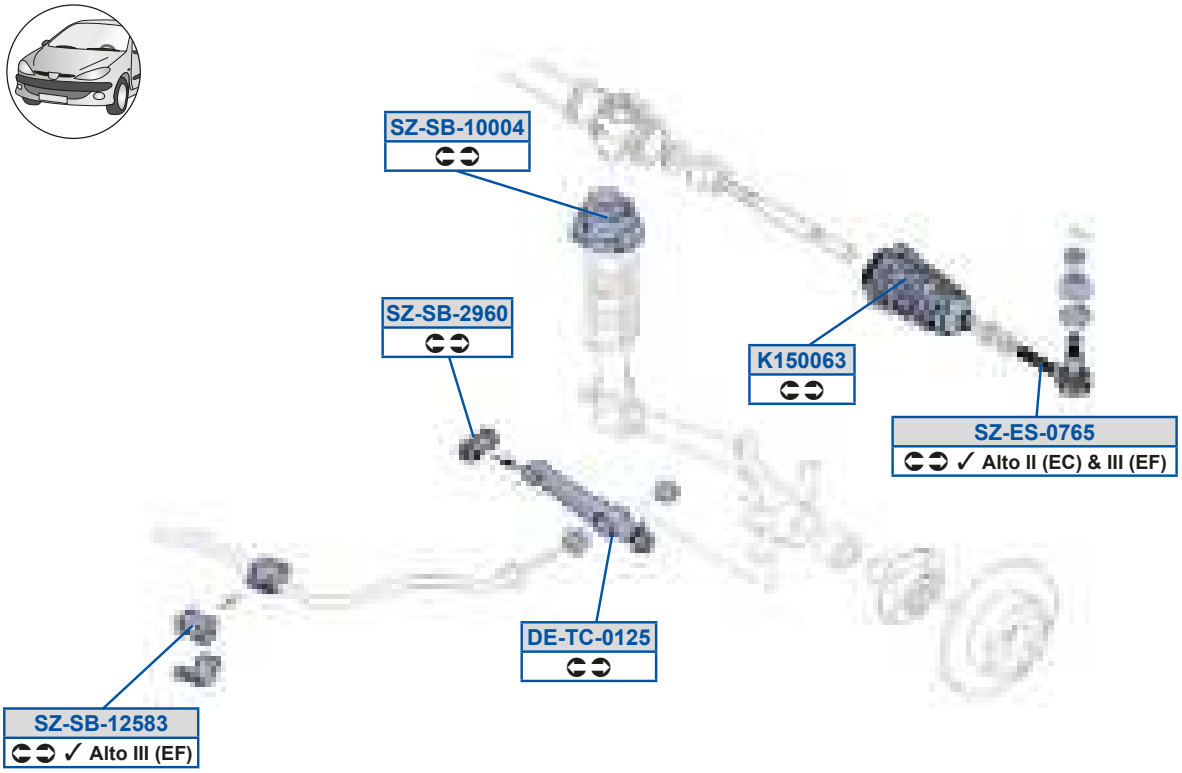

MOOG

RS5eQ589>C
BC977ECT773BC977ECT97

Y9C88DA
BFCE8F97773BFCE8a F9777

dk5Sd58EDC
BFF87FB7773BFF87FB778

dk5dP59888B
B8E89F97773B8E8AF9777

dk5dP59>CFA
B9BA8E7PB9

dk5dP5>GD8
GDAF7CFD

0Ze_ Wy 0TT1	8D78; 9; 78F		

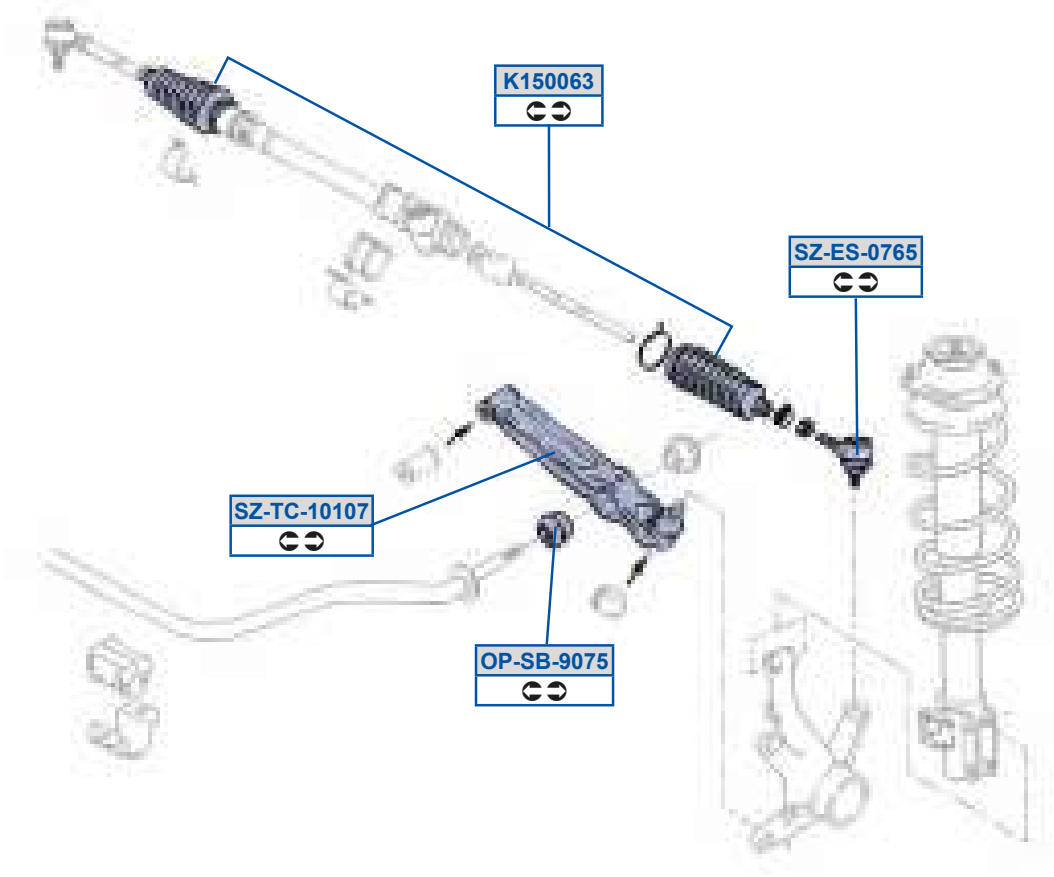

Y9C88DA

BFCE8F97773BFCE8a F9777

_ a5dP5G8EC

B9BC8a EDU77

dk5Sd58EDC

BFF87FB7773BFF87FB778

dk5eQ59898E

BC977a EGT773BC977a EGT87

0Ze_ g 0JT1	8G7GB	0Ze_ 0JT1	9879;

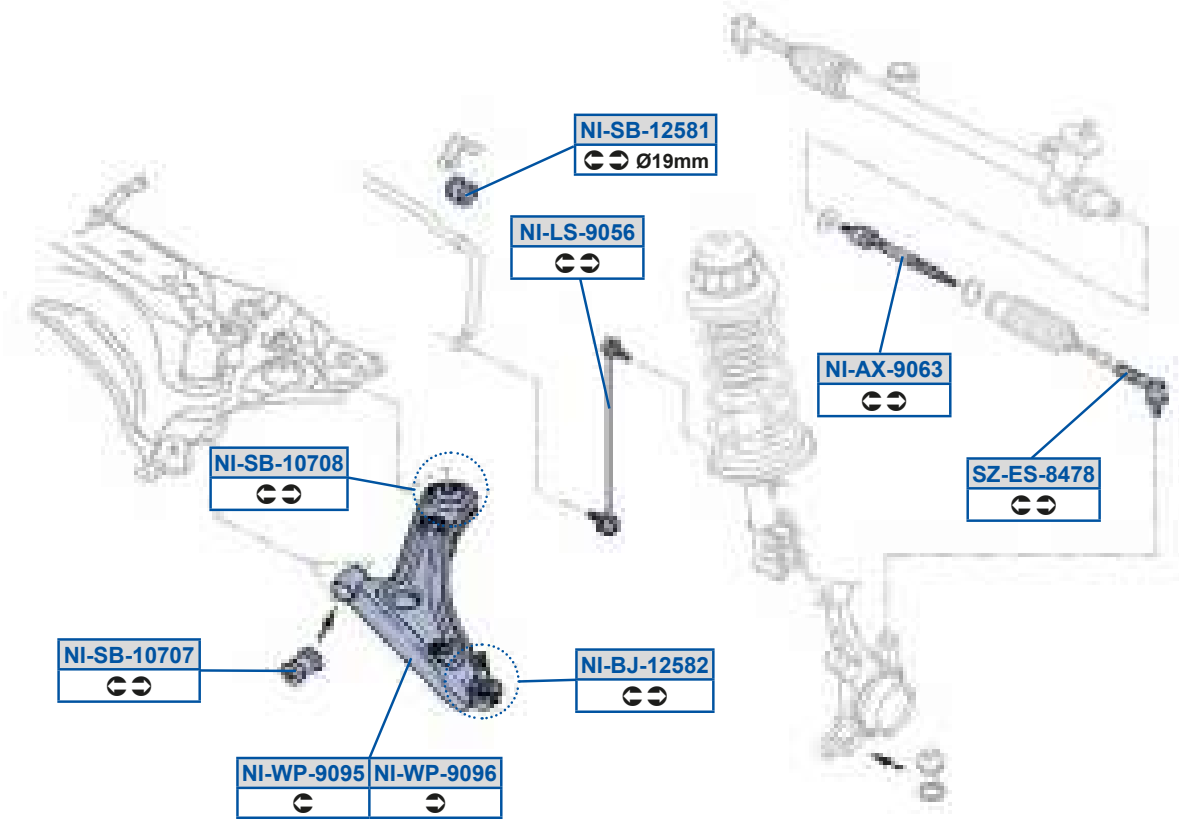

df kf YW

] V5Oi 5G8DA
BFFA7a DFY77

] V5PX59>CF>
CBC9GB077O

] V5ZZd5G8CD
B9B97a DFY77

] V5dP598E8E
BCCA7a DFY773CBB9AB077P

] V5dP598E8F
BC978a DFY77 /40

] V5dP59>CF9
B9BA8a DFY773CBD8Ba B077P

] V5h a5G8GC
BC979a DFY77

] V5h a5G8GD
BC978a DFY77

dk5Sd5FBEF
BFF87D7F873BFF87DAX77

dk5dP59>CFA
B9BA8E7PB9

df kf YW

POZS] _ 0SU1	8A7GC 8C78;	POZS] _ S t x 0SU1	8F7GD 8C78;
POZS] _ Vt vÉut v 0SU1	8A7GC 8C78;		

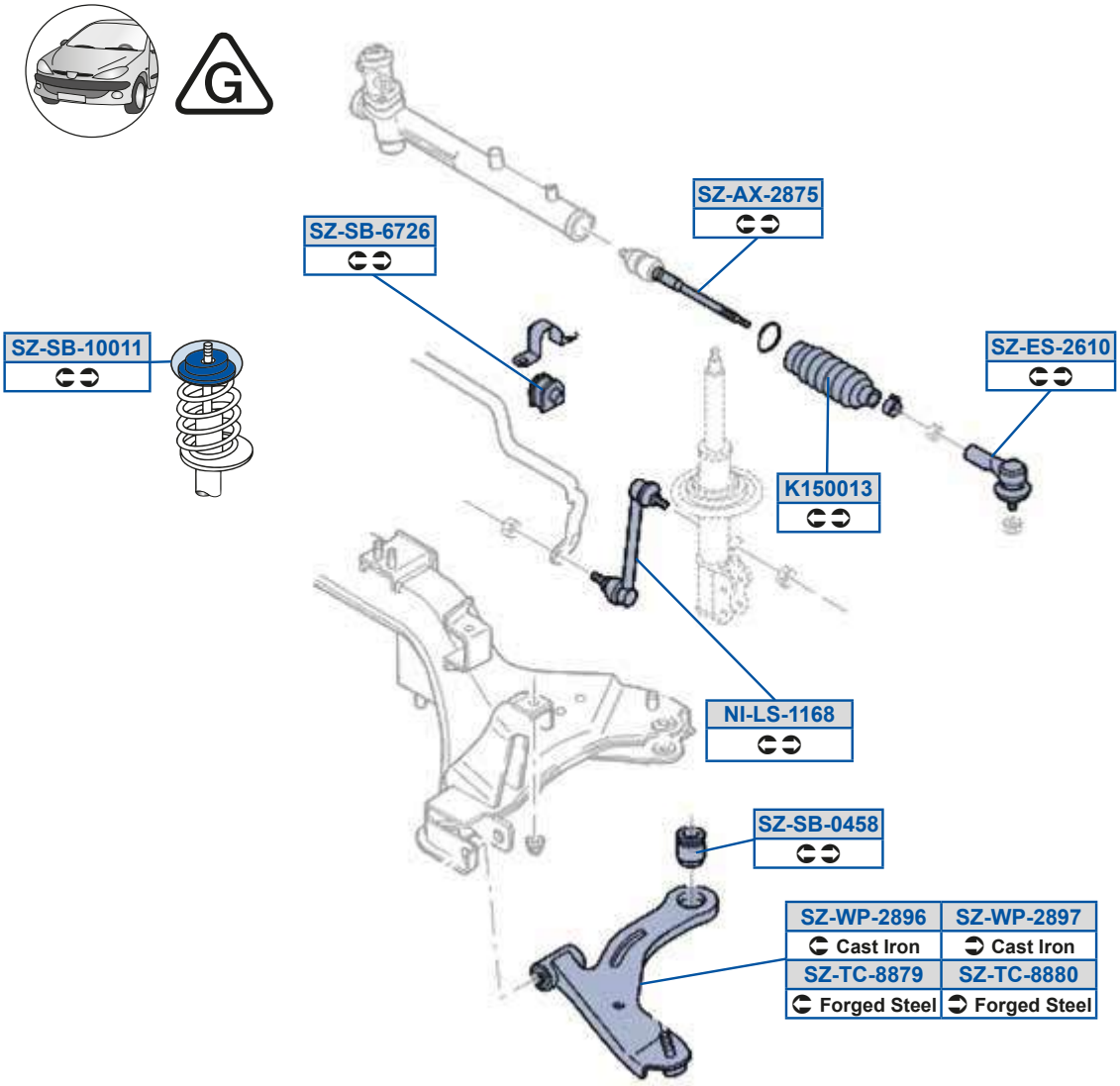

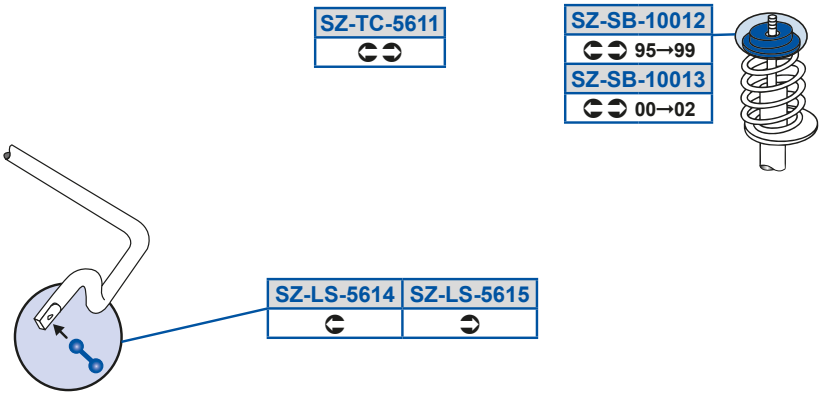

MOOG

Y9C889A
BFCE8D7U77

dk5dP59889>
B8G87D7U883B8G87D7U89

] WZd599DF
BDDA7D7P783CBD8FC7X97

dk5dP59889A
B8G87D7U97

dk5Oi 5>FEC
BFFA7D7U77

dk5dP5DE>D
B9BA8DBP77

dk5Sd5>D98
BFF87D7P773BFF87EDU77

dk5eQ5CD99
BDA77E7Q79

dk5Zd5CD9B
BDDB7F7T77

dk5eQ5FFEG
BC979D7U773BC979DAU78

dk5Zd5CD9C
BDDA7F7T77

dk5eQ5FFF8
BC978D7U773BC978DAU78

dk5dP58BCF
BDB97D7P79

dk5h a5>FGD
BC979D7U773BC979DAU78

dk5dP598899
B8E87D7U873B8EB9D7U77

dk5h a5>FGE
BC978D7U773BC978DAU78

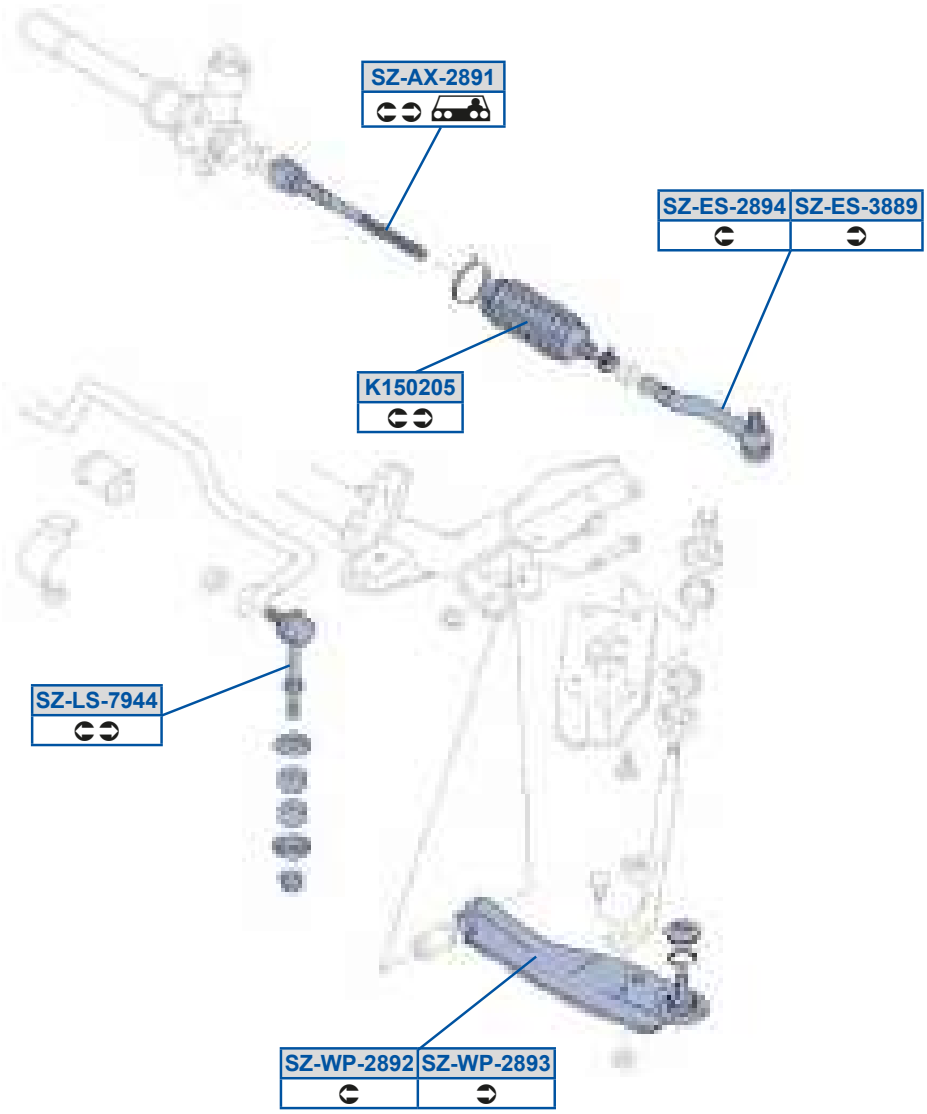
SZ-AX-2891
SZ-ES-2894
SZ-ES-3889
K150205
SZ-LS-7944
SZ-WP-2892
SZ-WP-2893

Y9C8>8C
BFCE8EE0773BFCE9EE077

dk5Oi 5>FG9
BFFA7EDU773BFFA7EE077

dk5Sd5>FGB
BFF97EF077

dk5Sd5AFFG
BFF87EF077

dk5Zd5EGBB
B9B97EE077

dk5h a5>FG>
BC979EE0783BC979EE087

dk5h a5>FGA
BC978EE0783BC978EE087

df kf YW

Uc0] R gWOc0 WOTe4Ue1	8A7GF 8G78C	Uc0] R gWOc0 WOTe4Ve1	8F7GF 9; 788
Uc0] R gWOc0 WQ x áu x OUe1	8A7GF 8E78A		

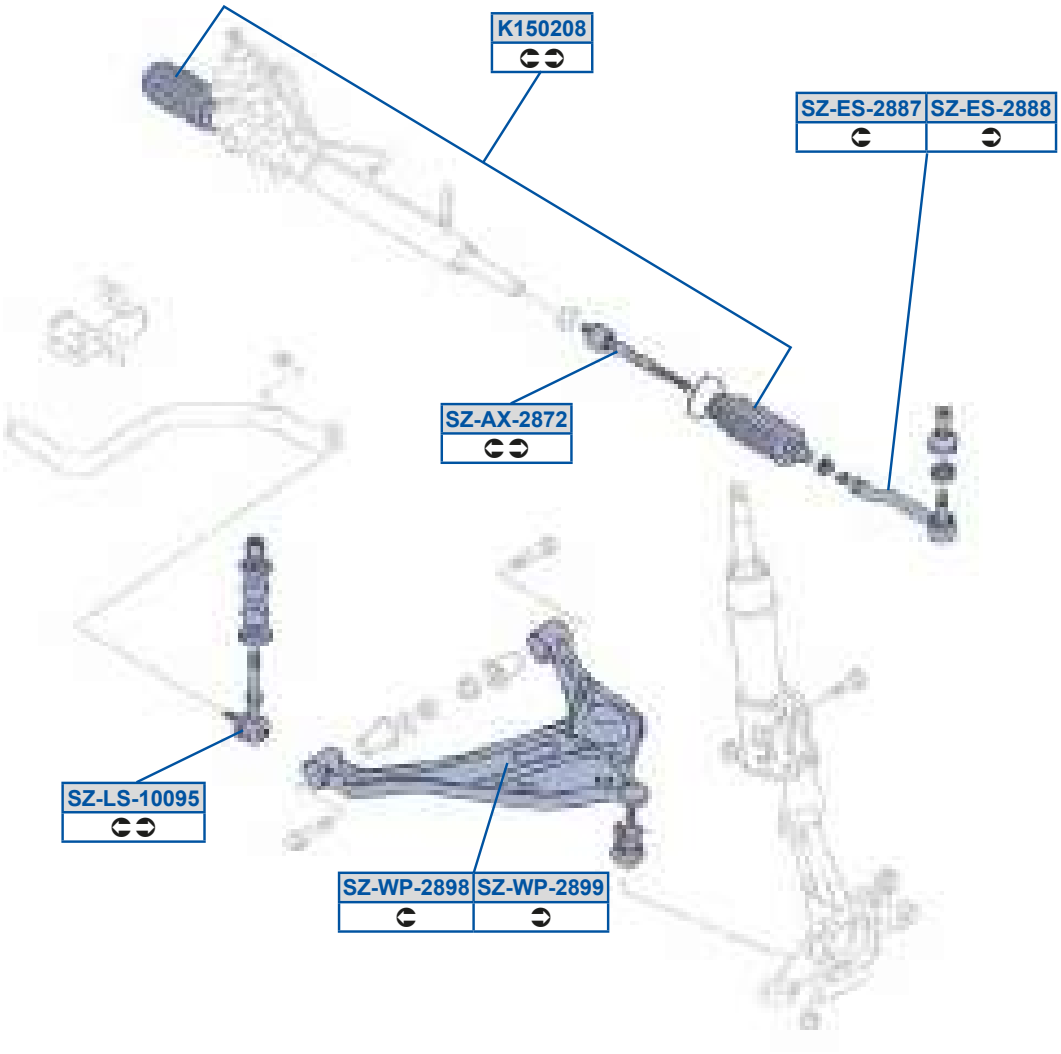

MOOG

Y9C8>8F
B8FC7DCR77

dk5Oi 5>FE>
BFFA7DCR77

dk5Sd5>FFE
BFF97DCR77

dk5Sd5>FFF
BFF87DCR77

dk5Zd5988GC
B9B97D7O773B9B97DCR77

dk5h a5>FGF
BC979DCR773BC979DCR78

dk5h a5>FGG
BC978DCR773BC978DCR78

df kf YW

Uc0] R gW0c0 WOXe1	8B78C	Uc0] R gW0c0 WOXe4eS4eR1	8B78C 8; 79C

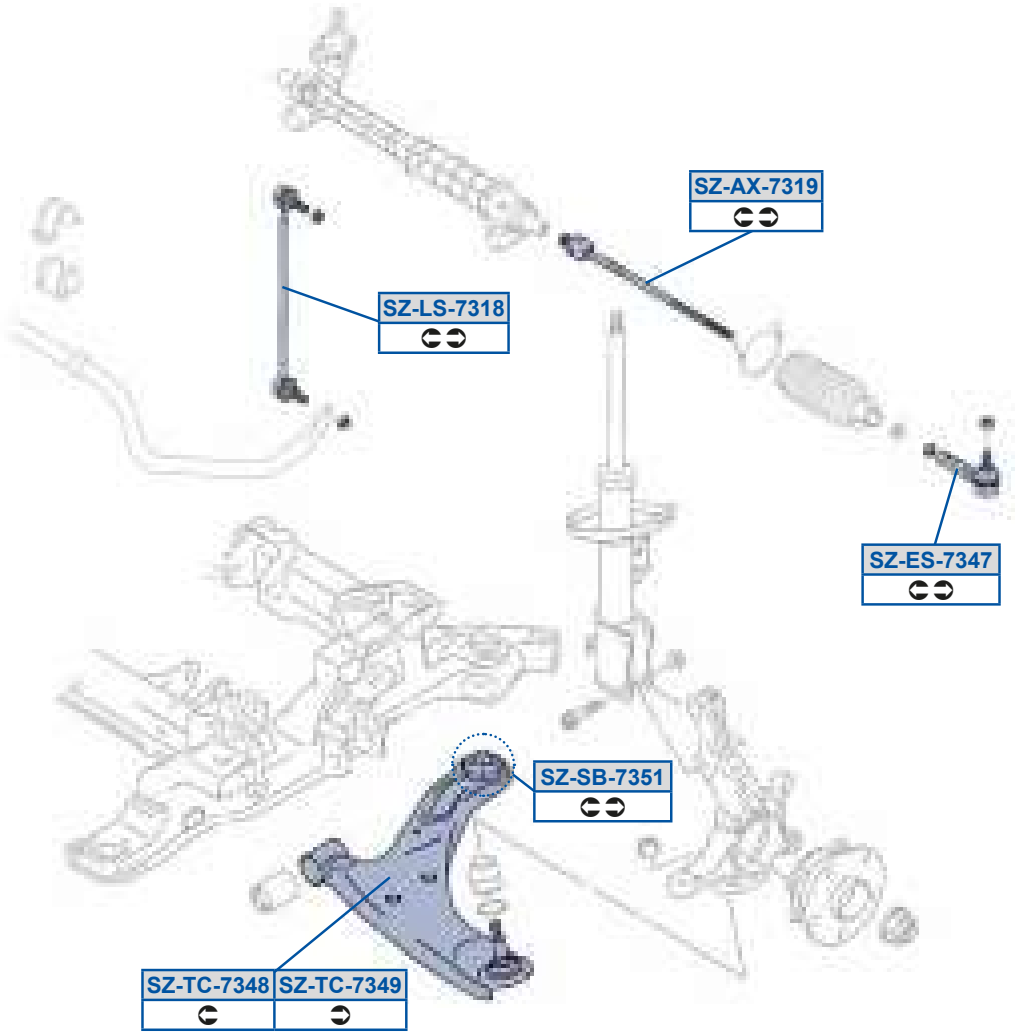

df kf YW

MOOG

dk5Oi 5EA9G
BFFA7DCX77

dk5Sd5EABE
BFF87DCX77

dk5Zd5EA9F
B9B97DCX77

dk5dP5EAC9
BC978DCX77 /40

dk5eQ5EABF
BC979DCX77

dk5eQ5EABG
BC978DCX77

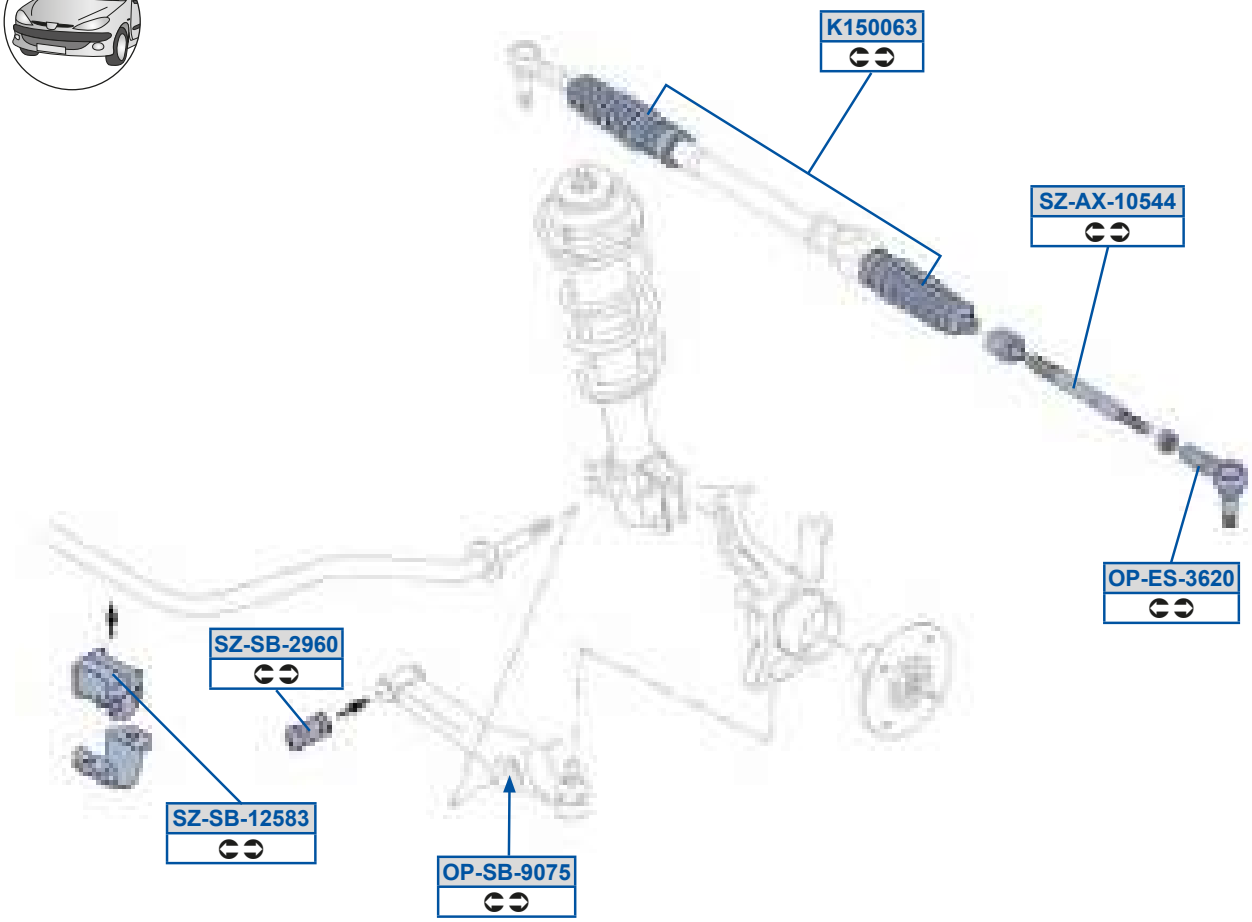
K150063
SZ-AX-10544
OP-ES-3620
SZ-SB-2960
SZ-SB-12583
OP-SB-9075

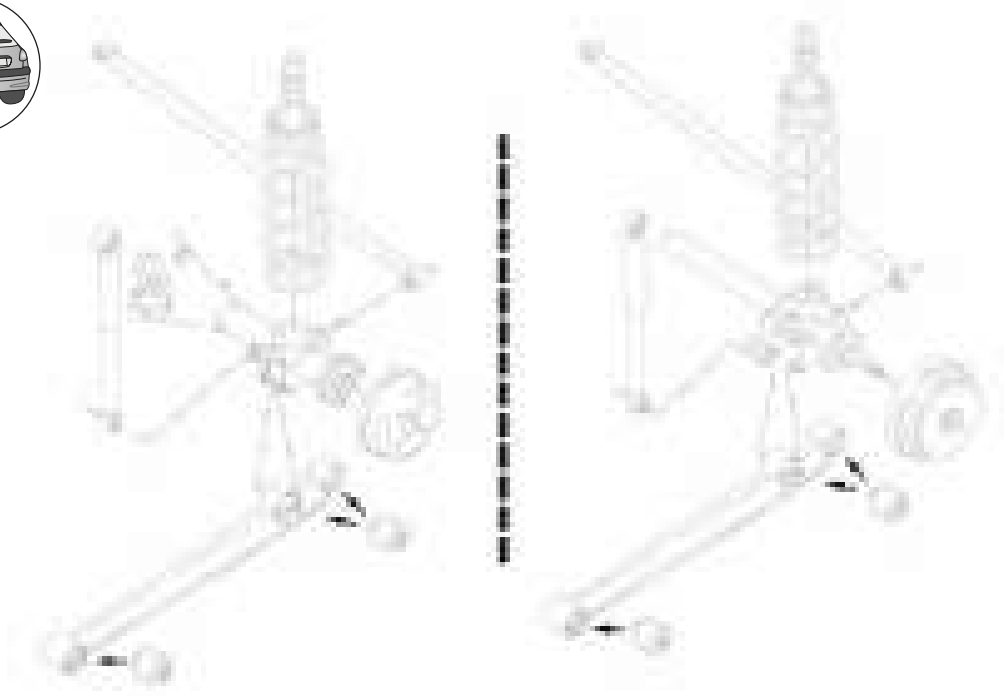

Y9C88DA
BFCE8F97773BFCE8a F9777

_ a5Sd5AD>8
BFF87DAX773BFF87FAS78

_ a5dP5G8EC
B9BC8a EDU77

dk5Oi 598CBB
BFFA7ECT773BFFA7ECT77777

dk5dP59>CFA
B9BA8E7PB9

dk5dP5>GD8
GDAF7CFD

df kf YW

W] Wl WQ[V1	8G78A		

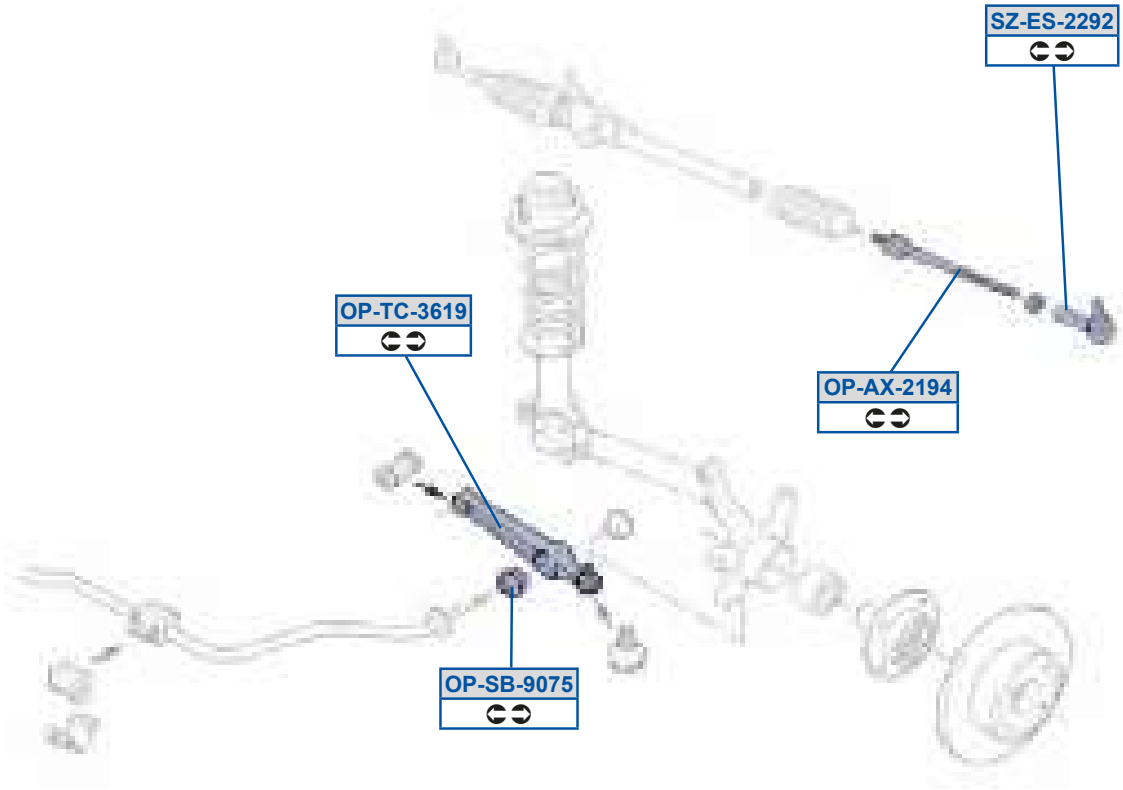

_ a5Oi 5>9GB

BFFA7FAS773BFFA7FDU77

_ a5dP5G8EC

B9BC8a EDU77

_ a5eQ5AD9G

BC977FAS773BC977FBS77

dk5Sd5>>G>

BFF87FAS773BFF87FAS78

XW[ ] k Q xw_yy5c t wgxÉé/ x 0d] 1	8G7GF		

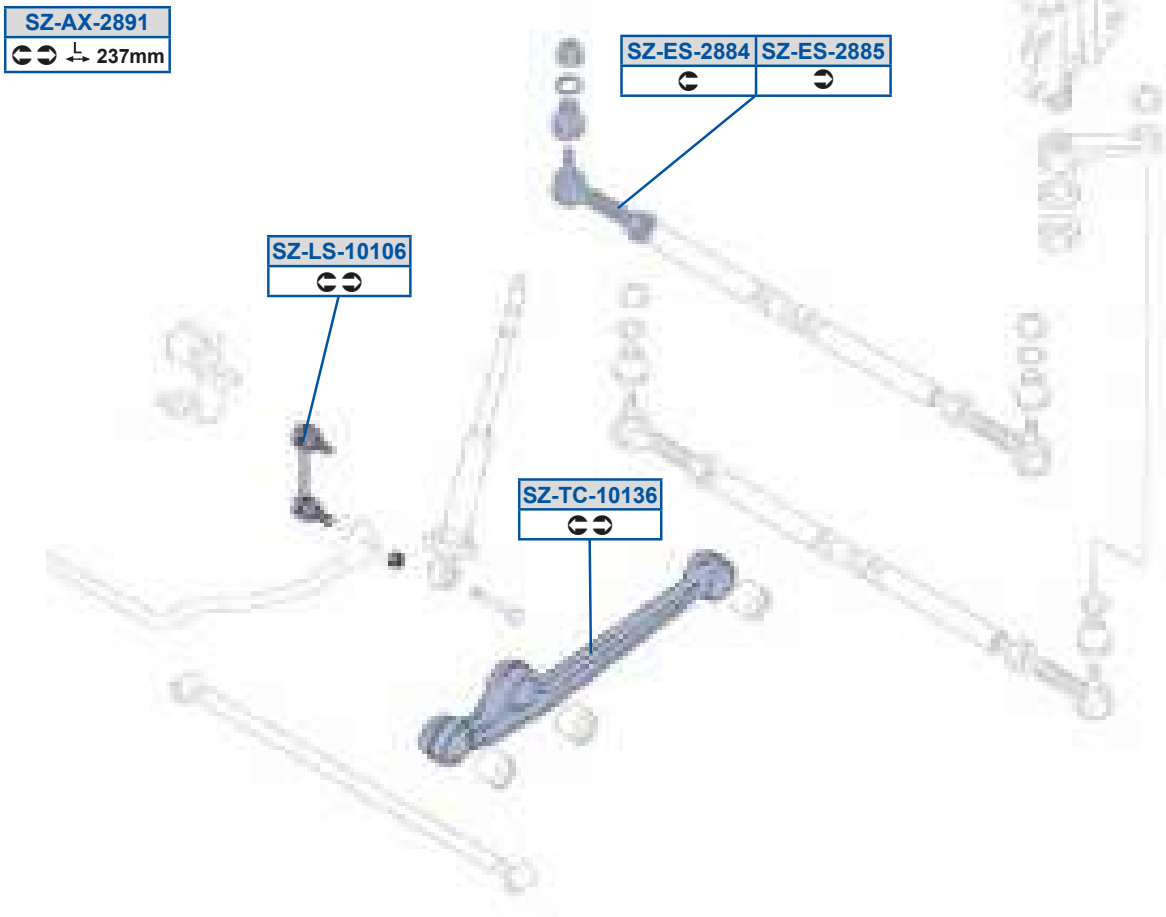

dk5Oi 5>FG9
BFFA7EDU773BFFA7EE077

dk5Sd5>FFB
BFF97F80773BFF97F8078

dk5Sd5>FFC
BFF87F8077

dk5Zd59898D
B9B97F8087

dk5eQ5989AD
BC977F8087

df kf YW

ZW] 0 0Sc 1	98789	ZW] 0 0Sc 4c Vr 1	98789
ZW] 0 Vt vÉut v	8E789 9; 78E		

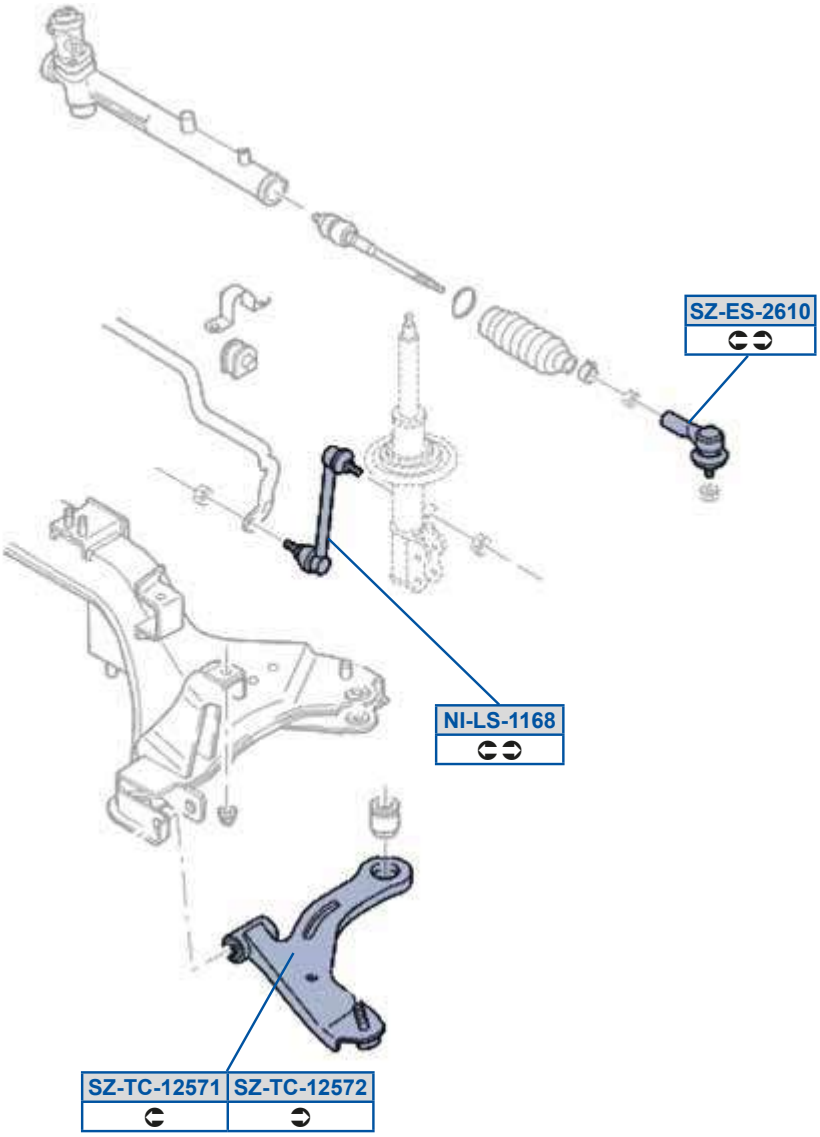

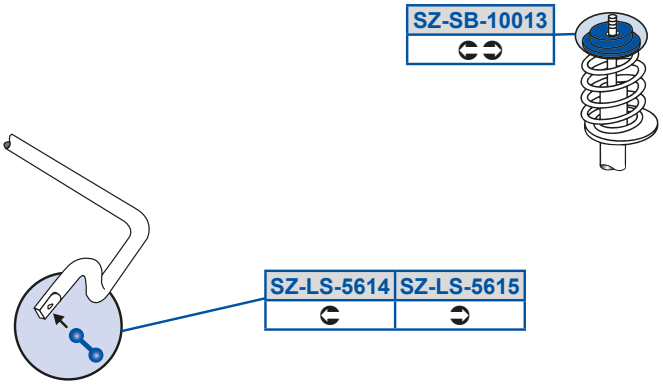

MOOG

] WZd599DF
BDDA7D7P783CBD8FC7X97

dk5Sd5>D98
BFF87D7P773BFF87EDU77

dk5Zd5CD9B
BDDB7F7T77

dk5Zd5CD9C
BDDA7F7T77

dk5dP59889A
B8G87D7U97

dk5eQ59>CE9
BC979CBU78

dk5eQ59>CE>
BC978CBU78

daZOdV	8978F		

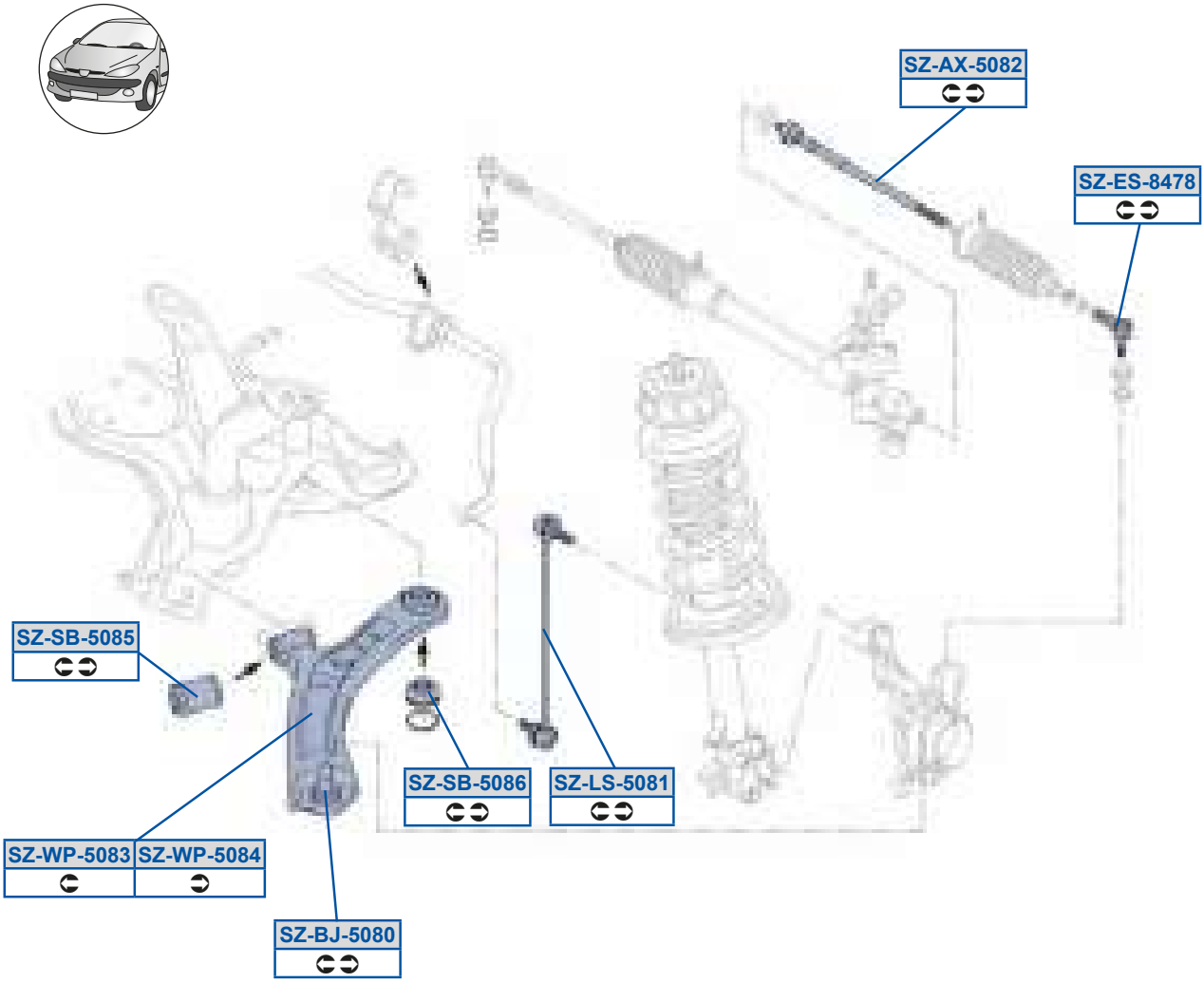

df kf YW

dk5Oi 5C8F>
BFFA7DAX77

dk5PX5C8F8
BC979D9X77 /40

dk5Sd5FBEF
BFF87D7F873BFF87DAX77

dk5Zd5C8F9
B9B97D9X773B9B97DAX77

dk5dP5C8FC
BCCA7D9X77

dk5dP5C8FD
BC979D9X77 /40

dk5h a5C8FA
BC979D9X773BC979DAX77

dk5h a5C8FB
BC978D9X773BC978DAX77

df kf YW

dh VWe WWQ[I 4SI 1	8; 78C		

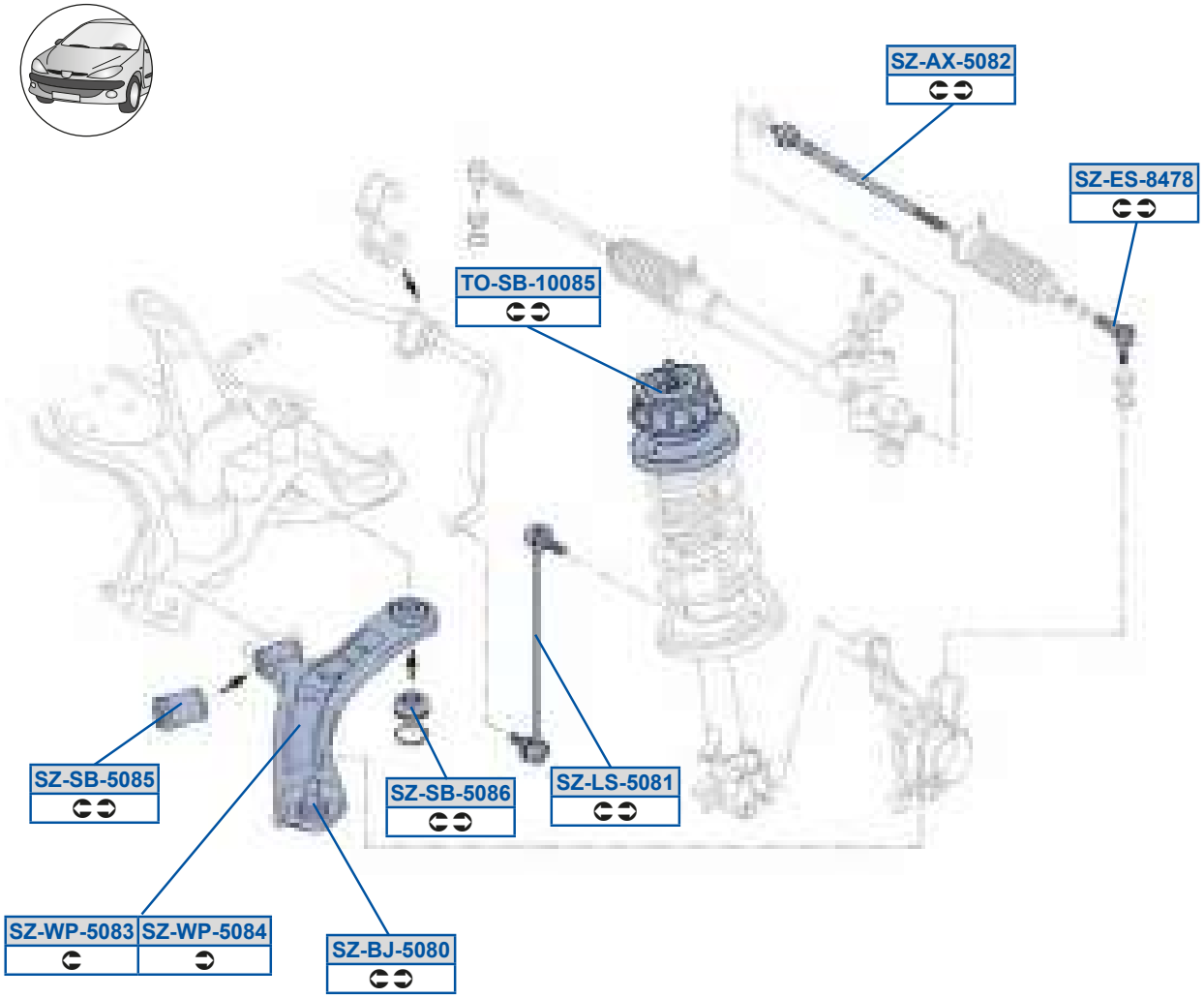

MOOG

dk5Oi 5C8F>
BFFA7DAX77

dk5PX5C8F8
BC979D9X77 /40

dk5Sd5FBEF
BFF87D7F873BFF87DAX77

dk5Zd5C8F9
B9B97D9X773B9B97DAX77

dk5dP5C8FC
BCCA7D9X77

dk5dP5C8FD
BC979D9X77 /40

dk5h a5C8FA
BC979D9X773BC979DAX77

dk5h a5C8FB
BC978D9X773BC978DAX77

e_ 5dP5988FC
BFD8G7R788

df kf YW

di B 0Sk4Uk1	8E798	di B 0Uk1	8D78D
di B dt 0Uk1	9878E		

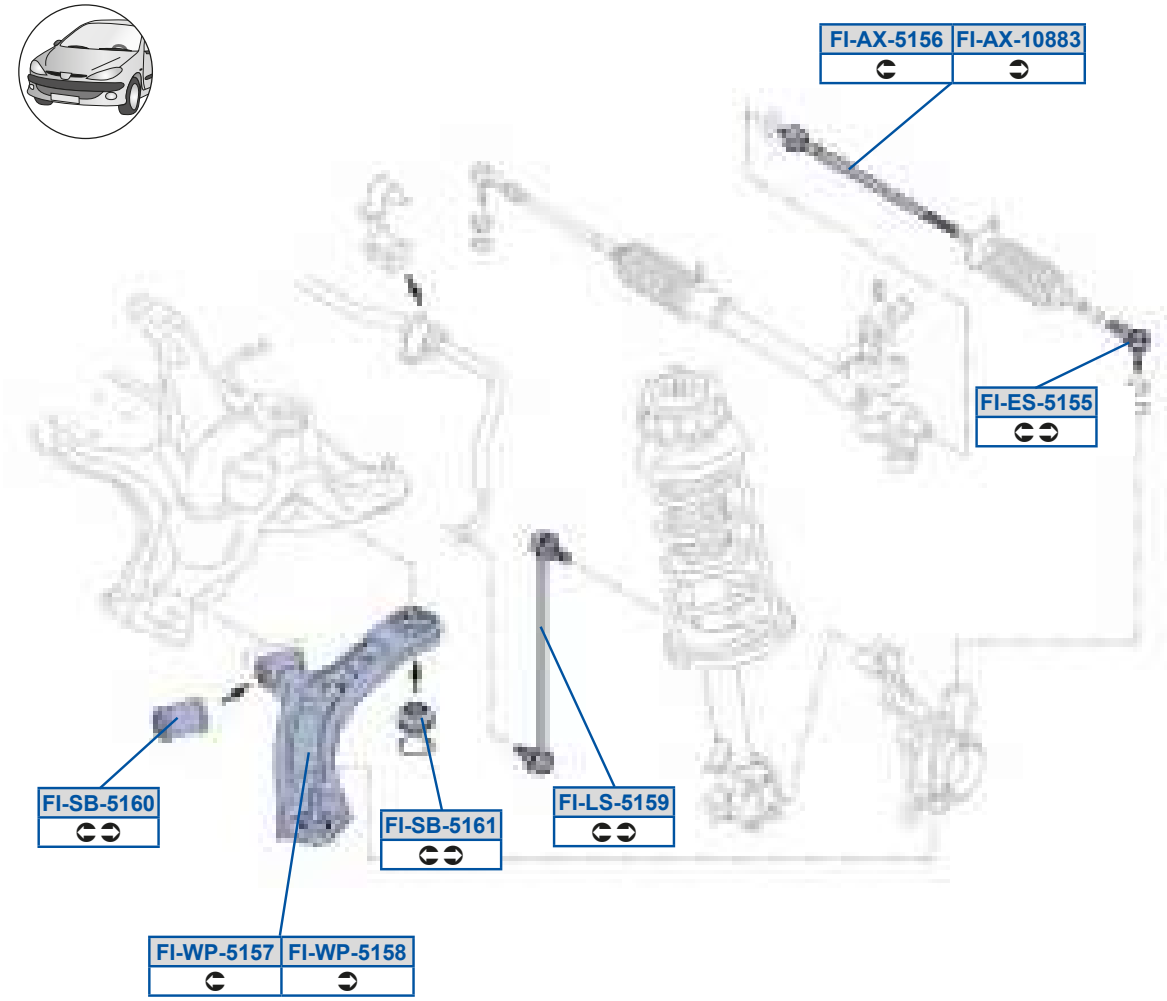

MOOG

TV5Oi 598FFA
BFFA7EGX77

TV5Oi 5C9CD
BFFA7EGX87

TV5Sd5C9CC
BFF87EGX773BFF87EGX78

TV5Zd5C9CG
B9B97F7X773E8EB9DFF

TV5dP5C9D8
BC9D8EGX773BCCA7DFZ77

TV5dP5C9D9
E8EB9EA8 /40BE8EB9EA9 /40

TV5h a5C9CE
BC979EGX77

TV5h a5C9CF
BC978EGX77

df kf YW

gWOc0 0Se1	9; 78A 9; 78C	gWOc0 0Se4e01	8E7FF 9; 7GF
gWOc0 Qtu é 0Se1	9; 78A 9; 78C	gWOc0 Qtu é 0Se4e01	8E7FF 9878;

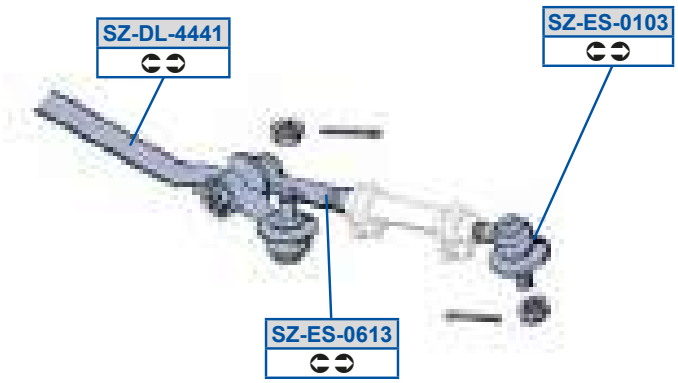

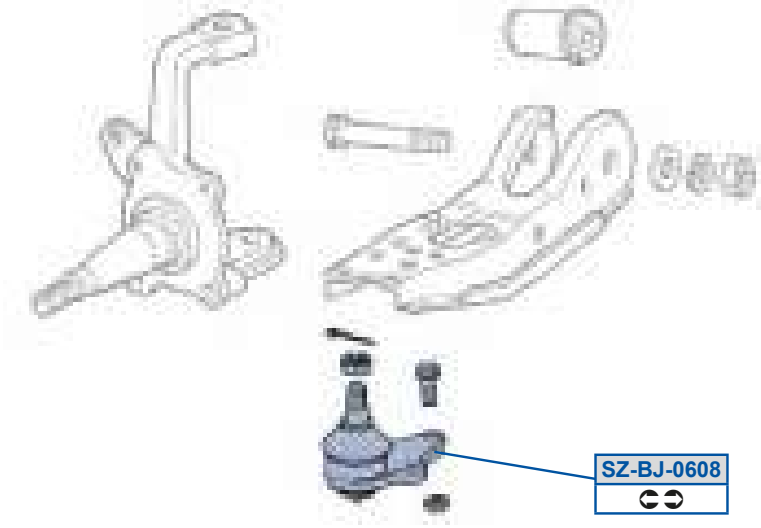

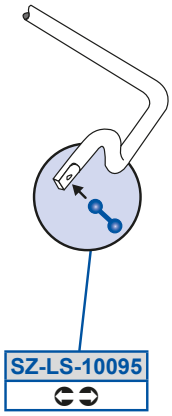

MOOG

dk5PX58D8F
BC977FCQ773BCE77D7077

dk5RZ5BBB9
BFFC7D7077

dk5Sd5898A
BFF87D70773BFF87F8078

dk5Sd58D9A
BFF97D70773BFF97EES77

dk5Zd5988GC
B9B97D70773B9B97DCR77

h OU_] c3 Vt vÉutv ŒS[1	987GE 98788	h OU_] c3 Vt vÉutv Œ[[1	8C788

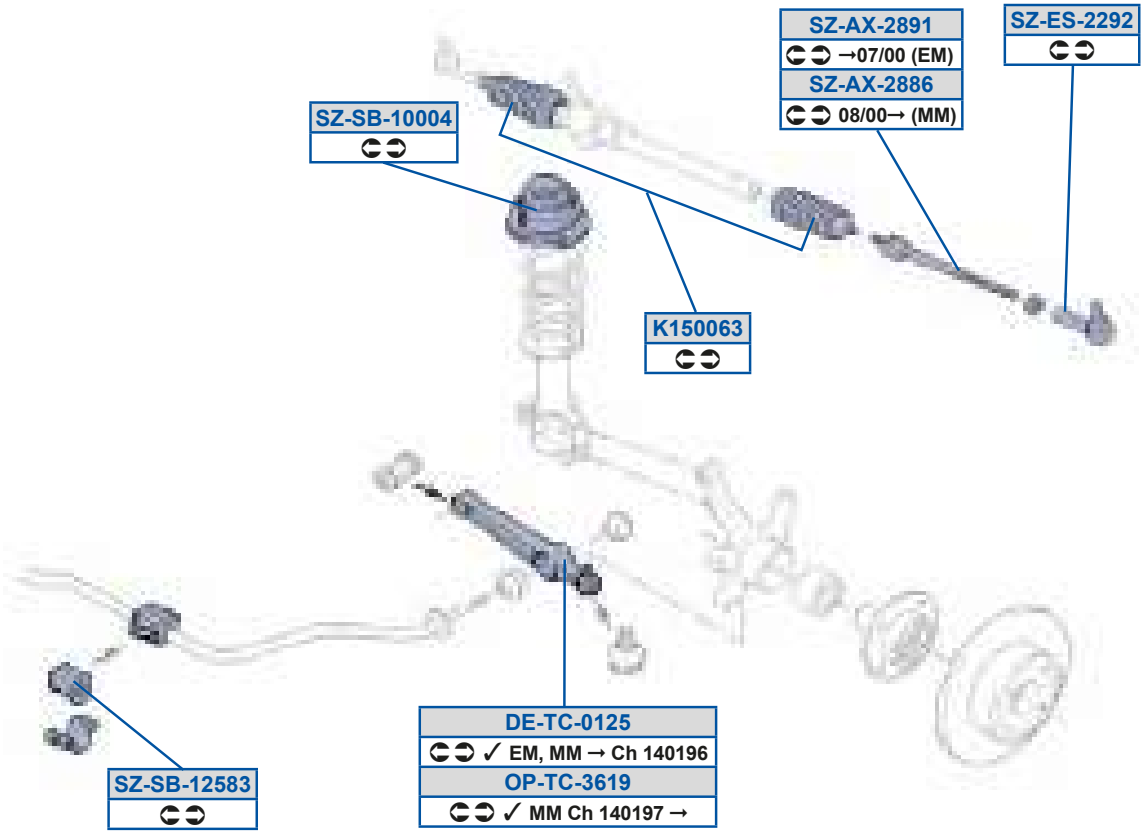

RS5eQ589>C
BC977ECT773BC977ECT97

Y9C88DA
BFCE8F97773BFCE8a F9777

_ a5eQ5AD9G
BC977FAS773BC977FBS77

dk5Oi 5>FFD
BFFA7ECT773BFFA7EFT77

dk5Oi 5>FG9
BFFA7EDU773BFFA7EE077

dk5Sd5>>G>
BFF87FAS773BFF87FAS78

dk5dP59888B
B8E89F97773B8E8AF9777

dk5dP59>CFA
B9BA8E7PB9

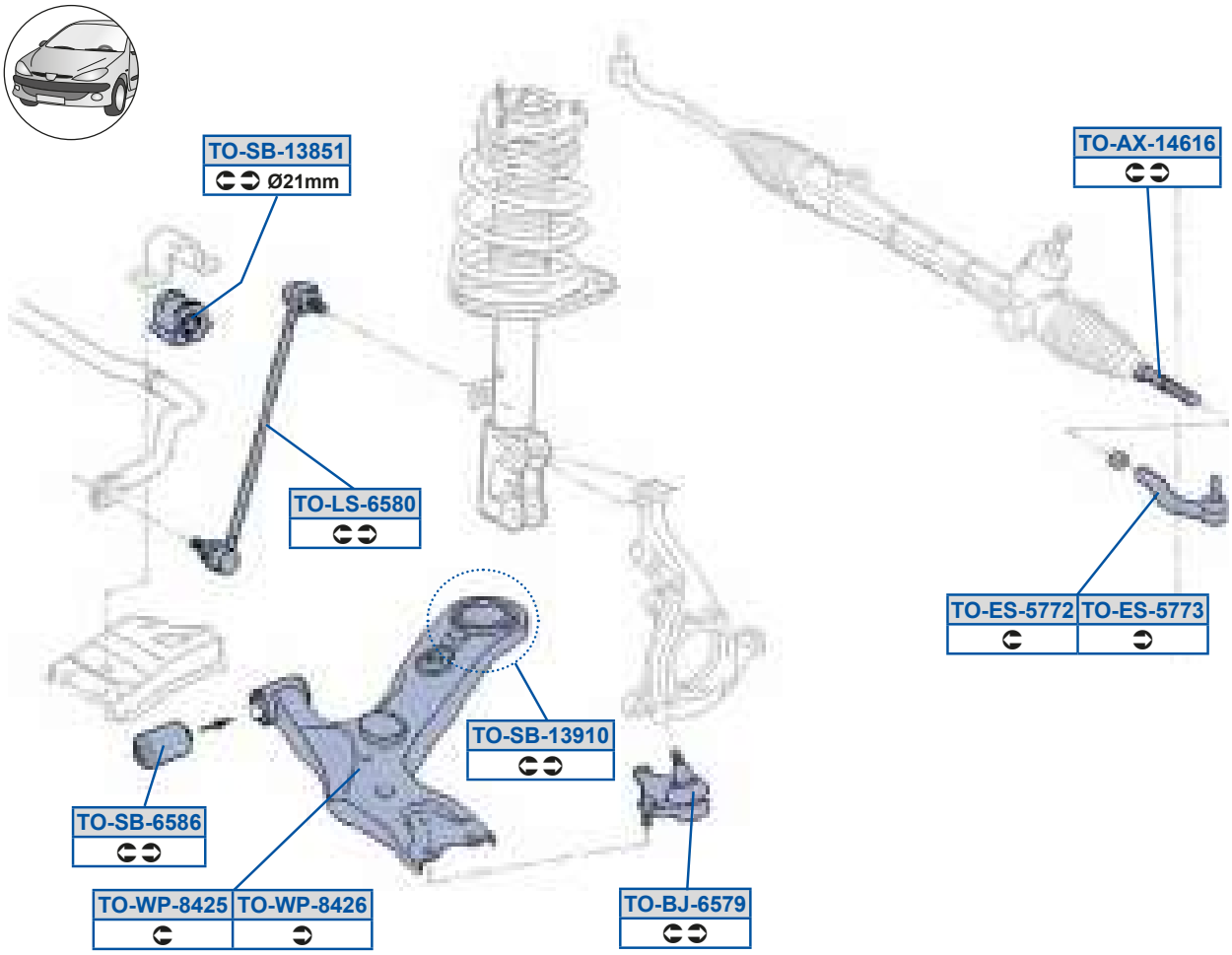
TO-SB-13851
Ø21mm
TO-AX-14616
TO-LS-6580
TO-ES-5772
TO-ES-5773
TO-SB-13910
TO-SB-6586
TO-WP-8425
TO-WP-8426
TO-BJ-6579

TO-LS-8428

e_ 5Oi 59BD9D
BCC87 89AG7 /40

e_ 5dP5DCFD
BF7DFB97C7 /40

e_ 5PX5DCEG
BAAA77GDA73BAAA78G9BC

e_ 5h a5FB>C
BF7DG798A73BF7DG7T7A7

e_ 5Sd5CEE>
BC7BE7G9E73BC7BE8G97C

e_ 5h a5FB>D
BF7DF798A73BF7DF7T7A7

e_ 5Sd5CEEA
BC7BD7GCE73BC7BD8GB7C

e_ 5Zd5DCF8
BFF97797E73BFF97B97A7

e_ 5Zd5FB>F
BFFA77C7A73BFFA7897E7

e_ 5dP59AFC9
BFF8C798B73BFF8C7C8A7

e_ 5dP59AG98
BF7DF89A77 /40

e_ j _ eO

OgS] dW Or e; ; r 1	8G7GE 8; 78A	OgS] dW Zéy ut v Or e; ; r 1	8G7GE 8; 78A
OgS] dW d t é h t' Or e; ; r 1	8G7GE 8; 78A		

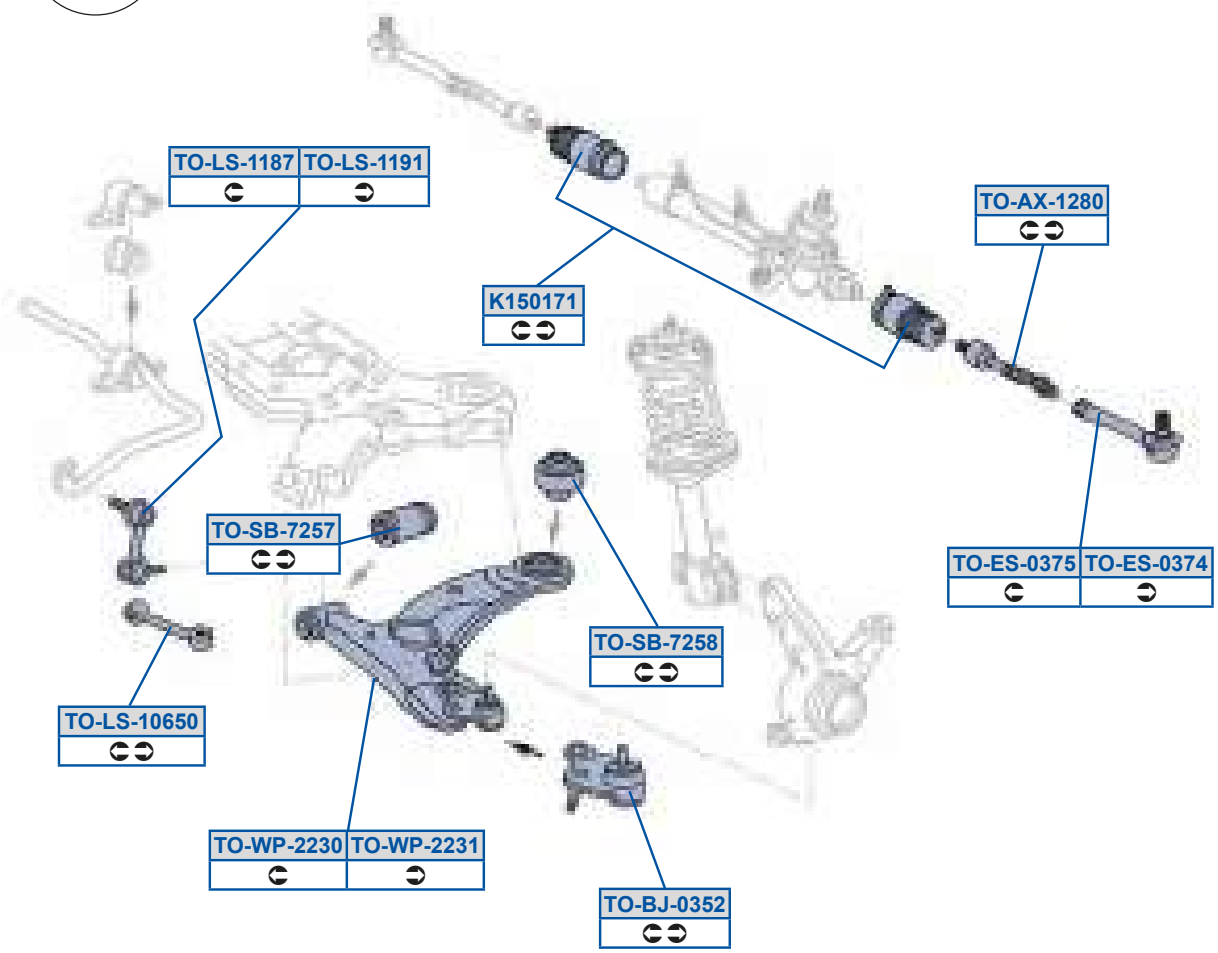

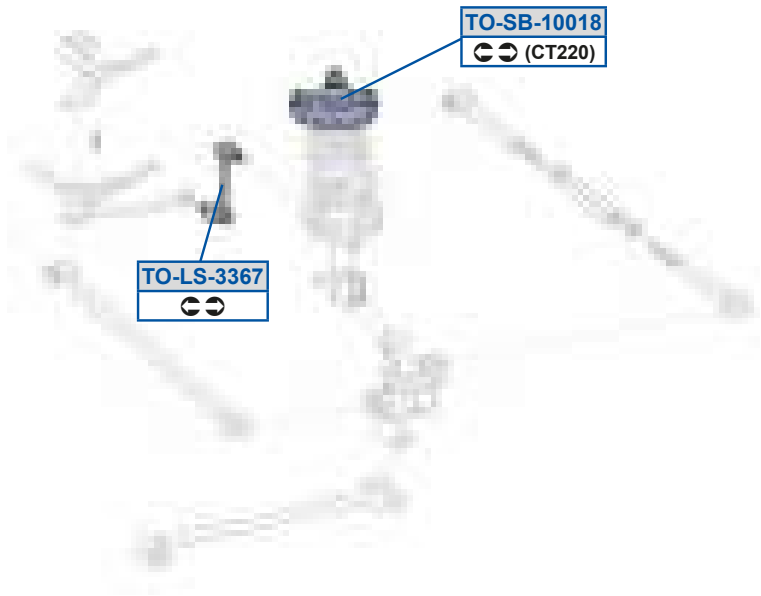

MOOG

Y9C89E9
BCCAC7C797

e_ 5Zd5AADE
BFFA77C797

e_ 5Oi 59>F8
BCC7A7C7873BCC7A7C797

e_ 5dP59889F
BF7E997797

e_ 5PX58AC>
BAAA77G7A73BAAA78G7GC

e_ 5dP5E>CE
BFDCB7C7B7

e_ 5Sd58AEB
BC7BD7G7C73BC7BD7G7D7

e_ 5dP5E>CF
BF7D87C7873BFDCC978B7

e_ 5Sd58AEC
BC7BE7G7873BC7BE7G797

e_ 5h a5>>A8
BF7DF7C7C73BF7DG7C7C7

e_ 5Zd598DC8
BFDC7977973BFDC797798

e_ 5h a5>>A9
BF7DF7C7C73BF7DG7C7C7

e_ 5Zd599FE
BFF877C7883BFF877C789

e_ 5Zd599G9
BFF877C7893BFF8797797

e_ j _ eO

OgS] dWd Oe; Cr 1	8B78A 9978F	OgS] dWd S t x Oe; C1	8B78A 9978F
OgS] dWd dt Oe; C1	8B78A 9978F		

O v z WO>88A 5L1le>Cn

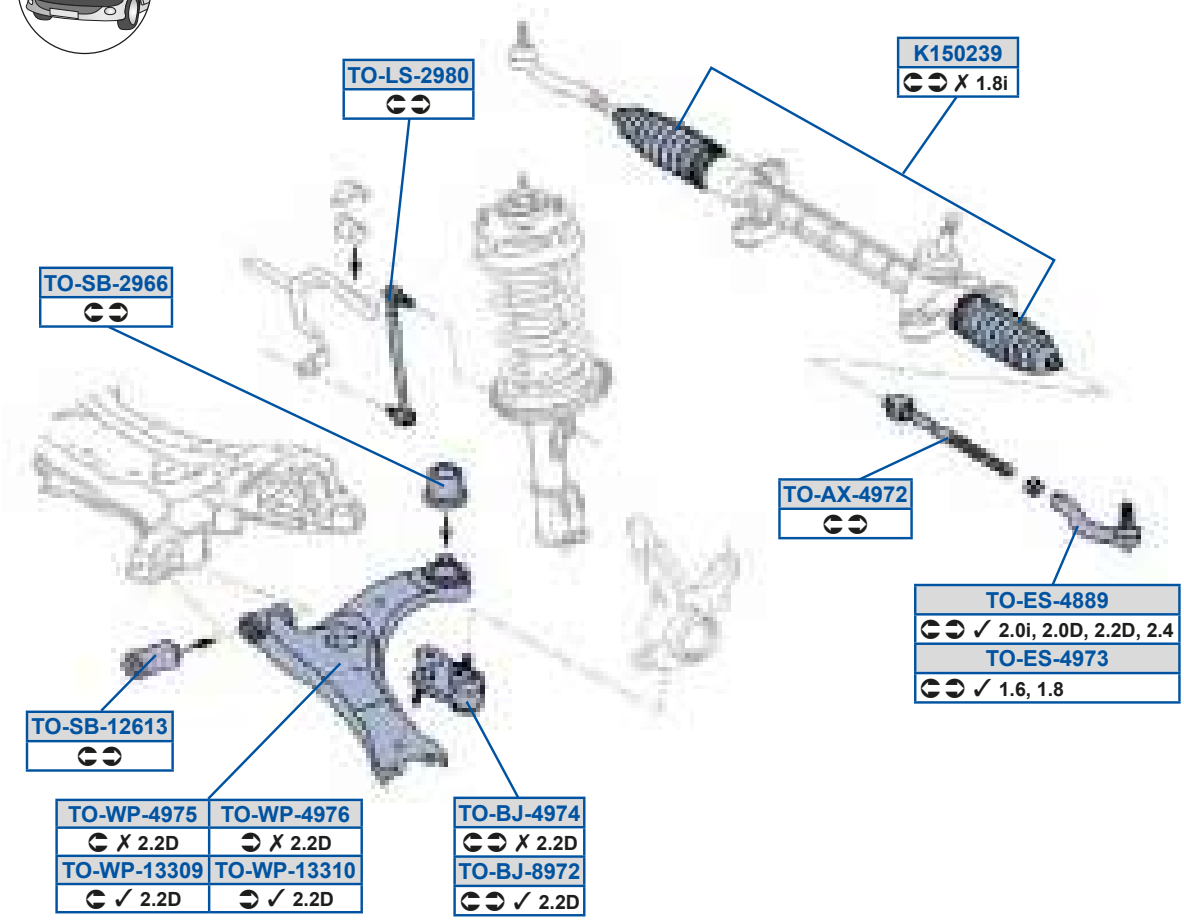

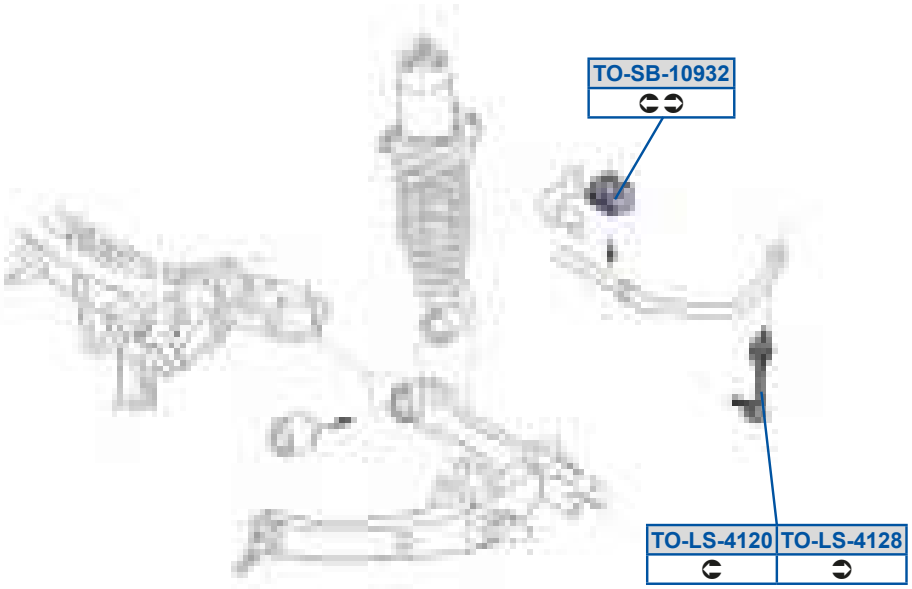

MOOG

Y9C8>AG
BCCAC7G797

e_5Zd5B9>F
BFFA798797

e_5Oi5BGE>
BCC7A7T7873BCC7A978E7

e_5dP598GA>
BFF8F7C7E7

e_5PX5BGEB
BAAA77G987

e_5dP59>D9A
BF7DF7C7E7 /40

e_5PX5FGE>
BAAA77GAD7

e_5dP5>GDD
BF7DF7C7E7 /40

e_5Sd5BFFG
BC7BD7GBA73BC7BD9GB9C

e_5h a59AA8G
BF7DG7T787

e_5Sd5BGEA
BC7BD7G9A73BC7BDCG88C

e_5h a59AA98
BF7DF7T787

e_5Zd5>GF8
BFF97BE787

e_5h a5BGEC
BF7DG7C7E7

e_5Zd5B9>8
BFFB798787

e_5h a5BGED
BF7DF7C7E7

OgS] dW S t x Ol ce; E4ORe; E1	8; 78G	OgS] dW dt Ol ce; E4ORe; E1	8; 78G

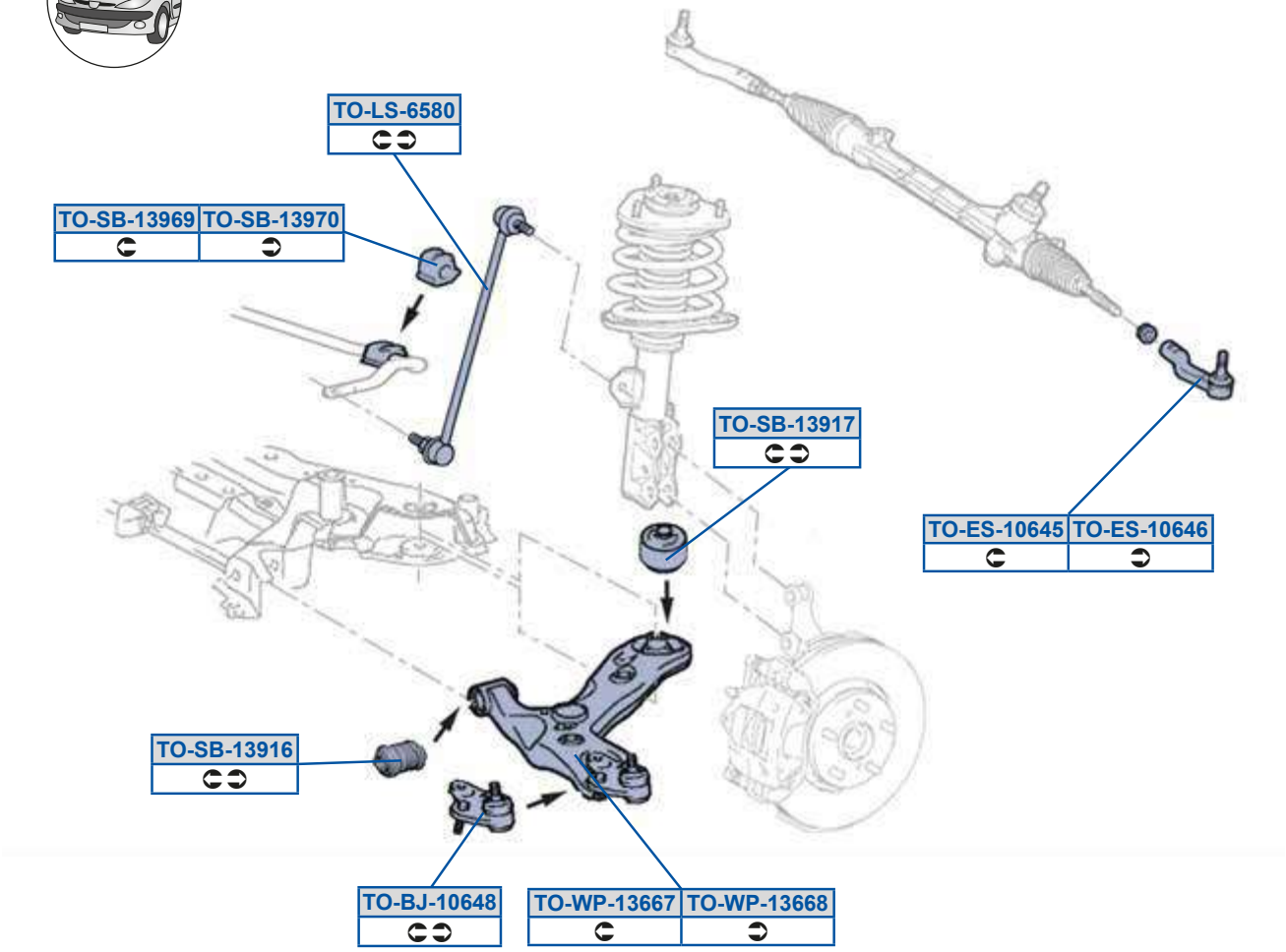

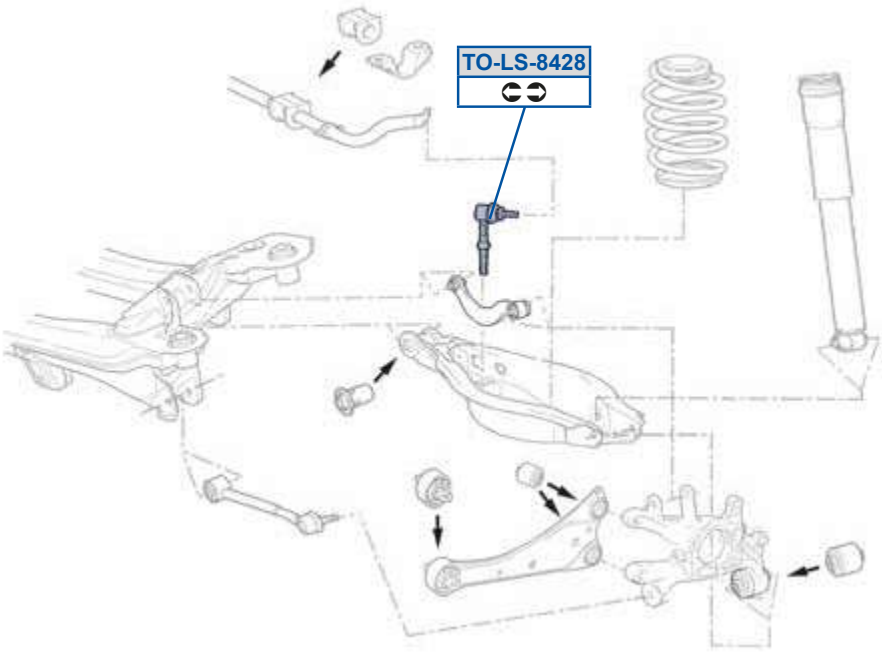

e_ 5PX598DBF
BAAA77GEE7

e_ 5dP59AGE8
BFF8C7C897

e_ 5Sd598DBC
BC7BE7C7D73BC7BE7GA97

e_ 5h a59ADDE
BF7DG7C7F7

e_ 5Sd598DBD
BC7BD7C7E73BC7BD7GDD7

e_ 5h a59ADDF
BF7DF7C7F7

e_ 5Zd5DCF8
BFF97797E73BFF97B97A7

e_ 5Zd5FB>F
BFFA77C7A73BFFA7897E7

e_ 5dP59AG9D
BF7DF7C7F7 /40

e_ 5dP59AG9E
BF7DF 7C7F7 /40

e_ 5dP59AGDG
BFF8C7C8A7

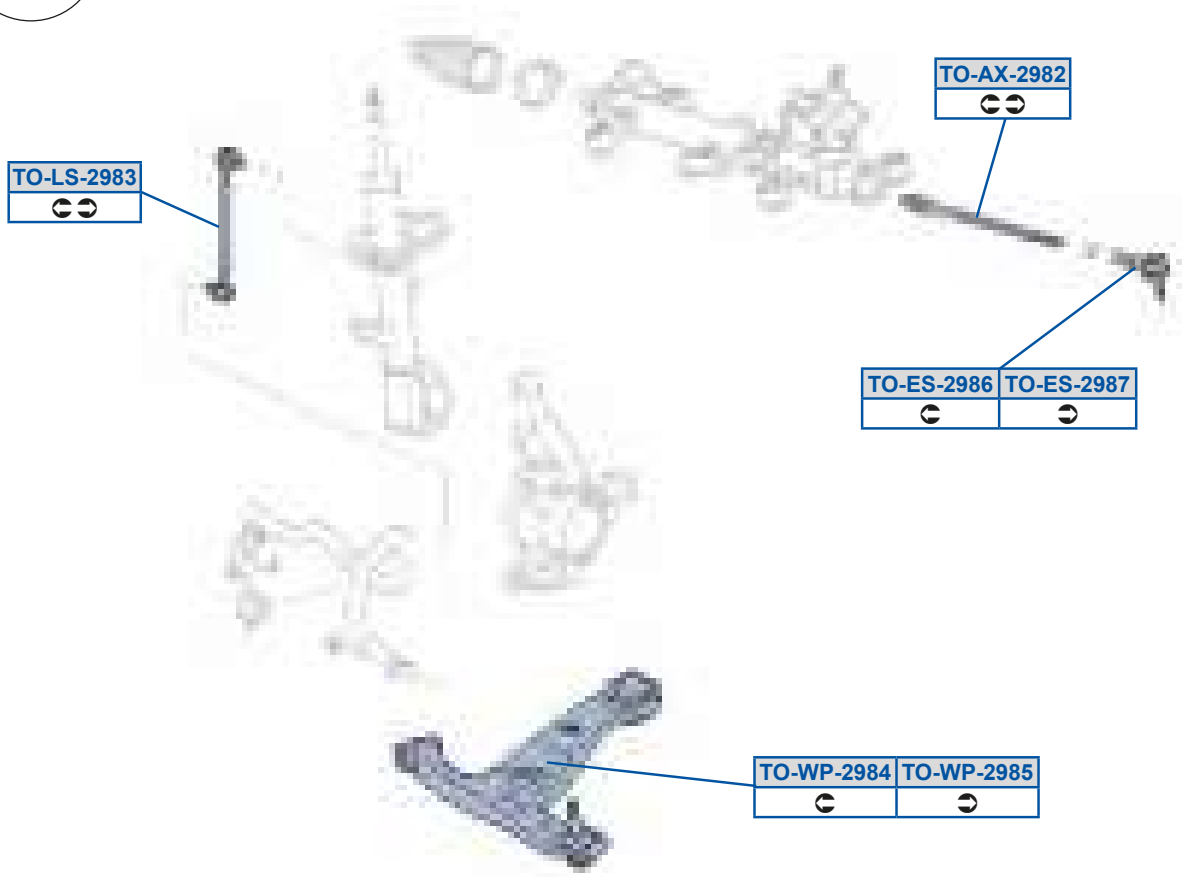
TO-AX-2982
TO-LS-2983
TO-ES-2986
TO-ES-2987
TO-WP-2984
TO-WP-2985

e_ 5Oi 5>GF>
BCC7ABG87C

e_ 5Sd5>GFD
BC7BDBG89C

e_ 5Sd5>GFE
BC7BEBG7CC

e_ 5Zd5>GFA
BFF97BB797

e_ 5h a5>GFB
BF7DG9G9DC3BF7DGBG7BC

e_ 5h a5>GFC
BF7DF9G9DC3BF7DFBG7BC

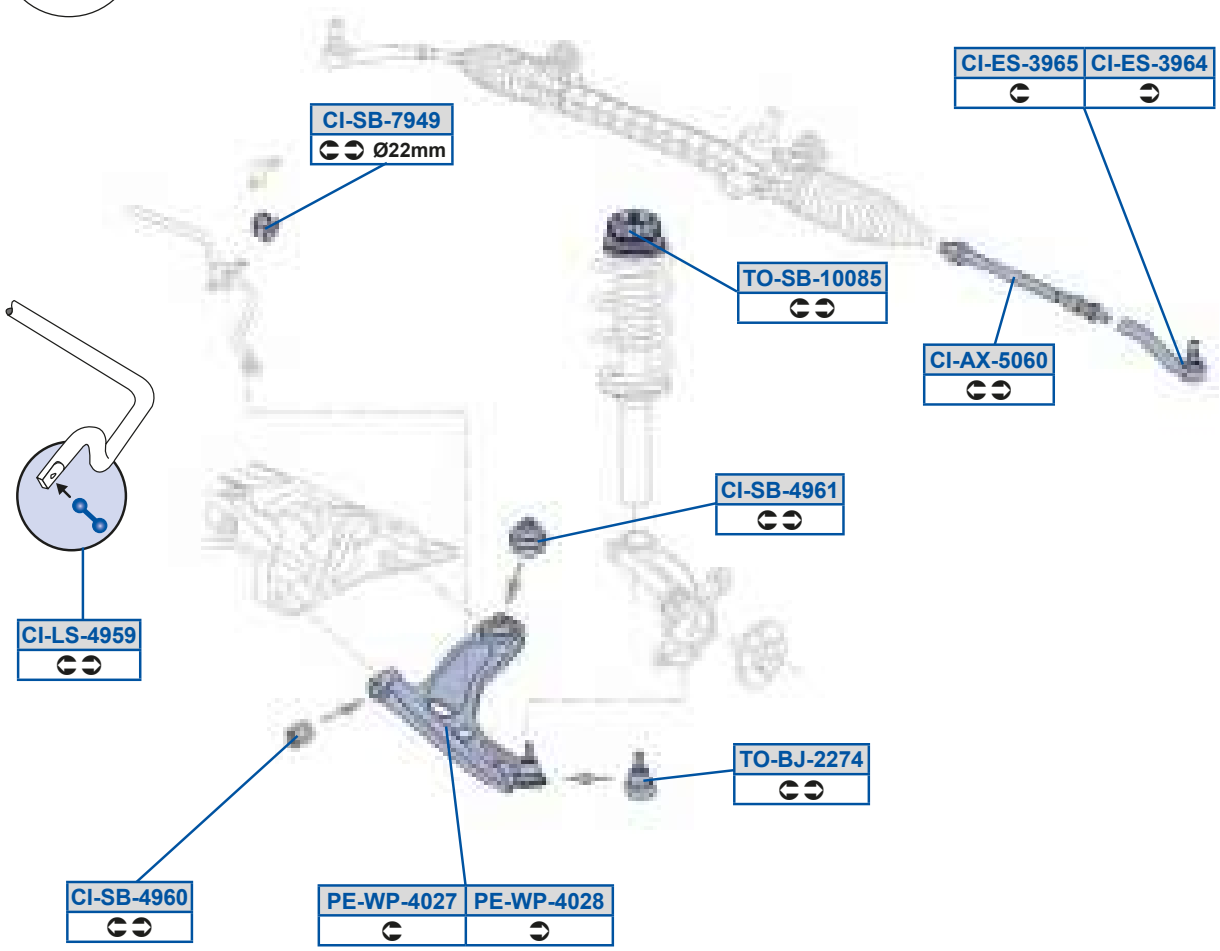
CI-ES-3965
CI-ES-3964
CI-SB-7949
Ø22mm
TO-SB-10085
CI-AX-5060
CI-SB-4961
CI-LS-4959
TO-BJ-2274
CI-SB-4960
PE-WP-4027
PE-WP-4028

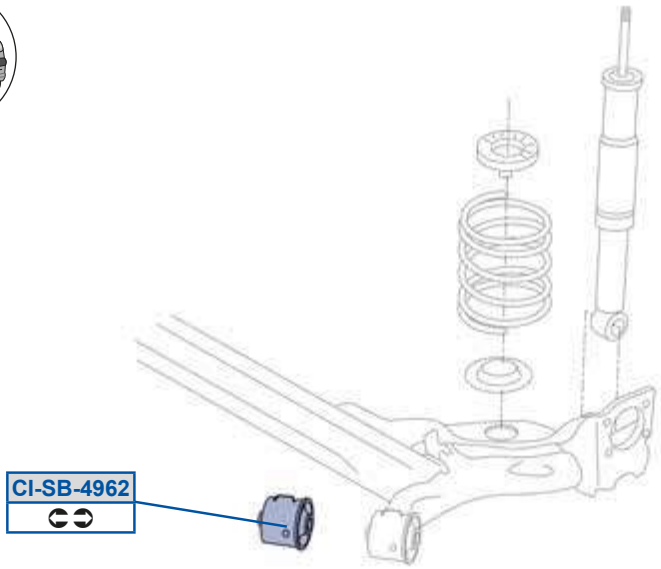
CI-SB-4962

QW5Oi 5C8D8
BCC777V787

QW5Sd5AGDB
BC7BD7G9GC

QW5Sd5AGDC
BC7BE7G89C

QW5ZZd5BGCG
BFF8GE77873C7G887

QW5dP5BGD8
AC97I 9 /403AC98ZA /40

QW5dP5BGD9
AC97I 9 /403AC98ZA /40

QW5dP5BGD>
BFE9CeV787

QW5dP5EGBG
BFF8C7V787

aS5h a5B8>E
BF7DG7V787

aS5h a5B8>F
BF7DF7V787

e_5PX5>>EB
BAA7FCG7AC3BF7DFCG7AC /40

e_5dP5988FC
BFD8G7R788

e_ j _ eO

QO[ck Or Qg9r 4r i g9r 4r g9r 1	8D7G9	8G7GE	QO[ck Or Qg; r 4r i g; r 1	8F7GD	99789
QO[ck d6h 6Or i g9r 4r Qg9r 4r g981	8D7G9	8F7GE			

Qr 09CE9 5L >8891

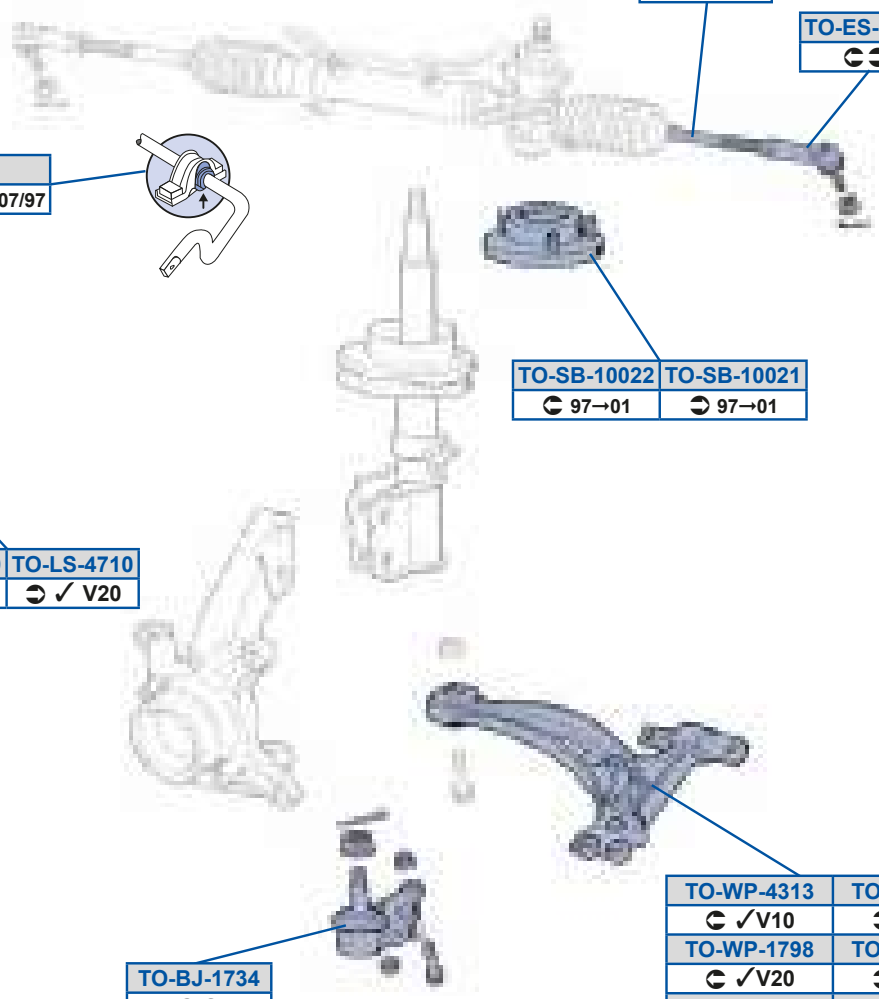

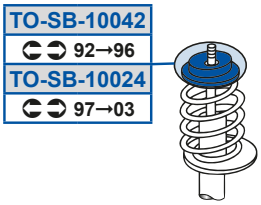

e_ i _ eO

MOOG

e_ 5Oi 5AA>9
BCC7A9GACC3BCC7AAG7CC

e_ 5h a59ECF
BF7DFAA7A7

e_ 5PX59EAB
BAAA77G7C73BAAA7AG9FC

e_ 5h a59EGF
BF7DGAA7A73BF7DGAA7A8

e_ 5Sd5AA8D
BC7BD7G7973BC7BD9G9CC

e_ 5h a5EACF
BF7DG47D7E73BF7DG9F897

e_ 5Zd5BE8G
BFF877D7A73BFF87AA787

e_ 5h a5EACG
BF7DF47D7E73BF7DF8F897

e_ 5Zd5BE98
BFF977D7A73BFF97AA797

e_ 5dP5988>9
BFD7A7D7A83BFD7AAA797

e_ 5dP5988>>
BFD7G7D7D83BFD7G7D7F8

e_ 5dP5988>B
BFEC77D7C73BFEC77D7D7

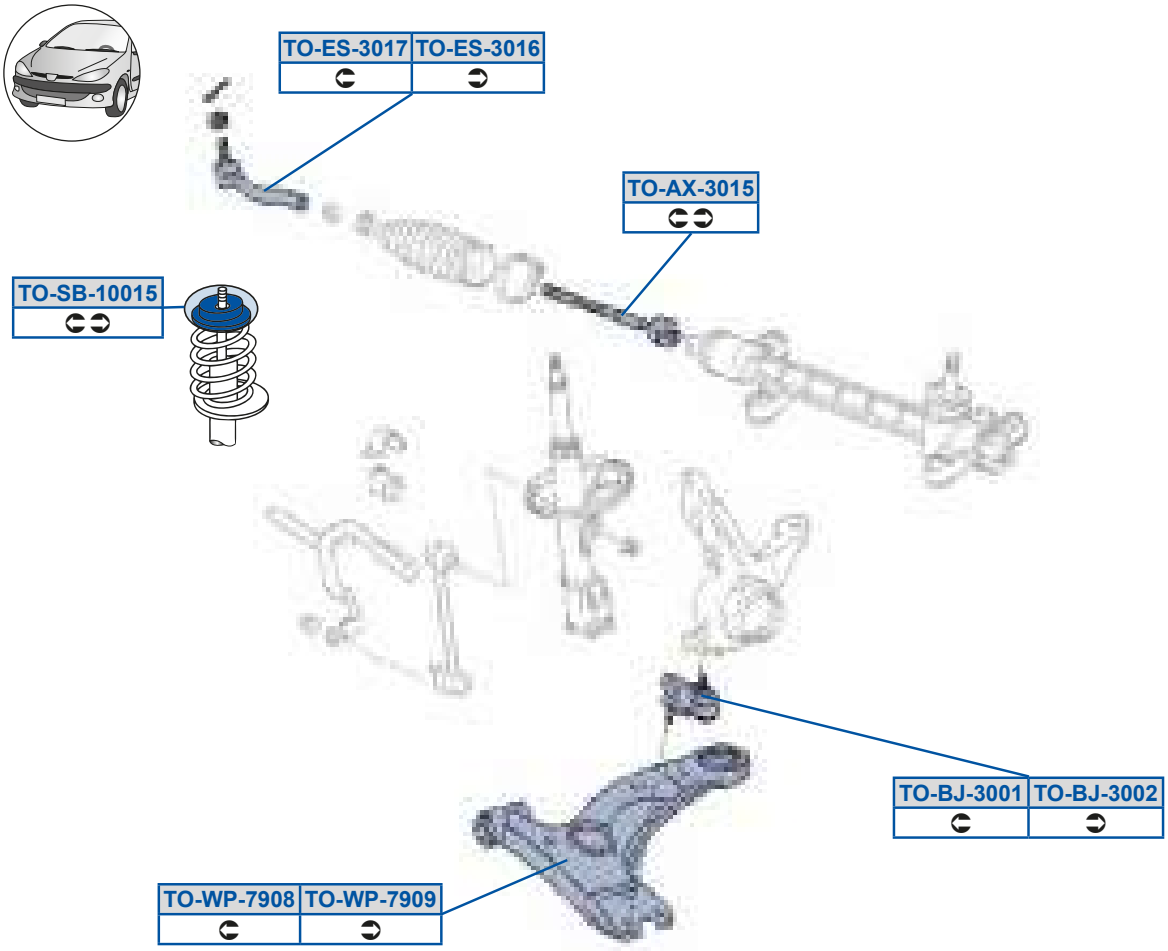
TO-ES-3017
TO-ES-3016
TO-AX-3015
TO-SB-10015
TO-BJ-3001
TO-BJ-3002
TO-WP-7908
TO-WP-7909

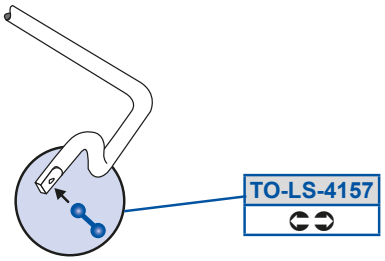
TO-LS-4157

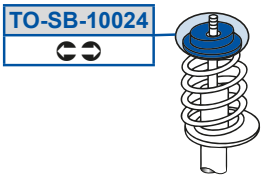
TO-SB-10024

e_5Oi5A89C
BCC7A7G9A73BCC7AAG99C

e_5PX5A889
BAAB77G7873BAAB79G8EC

e_5PX5A88>
BAAA77G8D73BAAA79GB7C

e_5Sd5A89D
BCBD77G7873BCBD7AGD8C

e_5Sd5A89E
BCBE7AG98C

e_5Zd5B9CE
BFFA77D7973BFFA77D7A7

e_5dP59889C
BFD7GAA8D73BFD7GBF787

e_5dP5988>B
BFEC77D7C73BFEC77D7D7

e_5h a5EACF
BF7DG47D7E73BF7DG9F897

e_5h a5EACG
BF7DF47D7E73BF7DF8F897

e_ j _ eO

QOc WJ O S Or e9Gr 1	8B7G; 8G7GE	QOc WJ O S dt Or e9Gr 1	8B7G; 8G7GE
QOc WJ O S d t ' Or e9Gr 1	897GA 8G7GE		

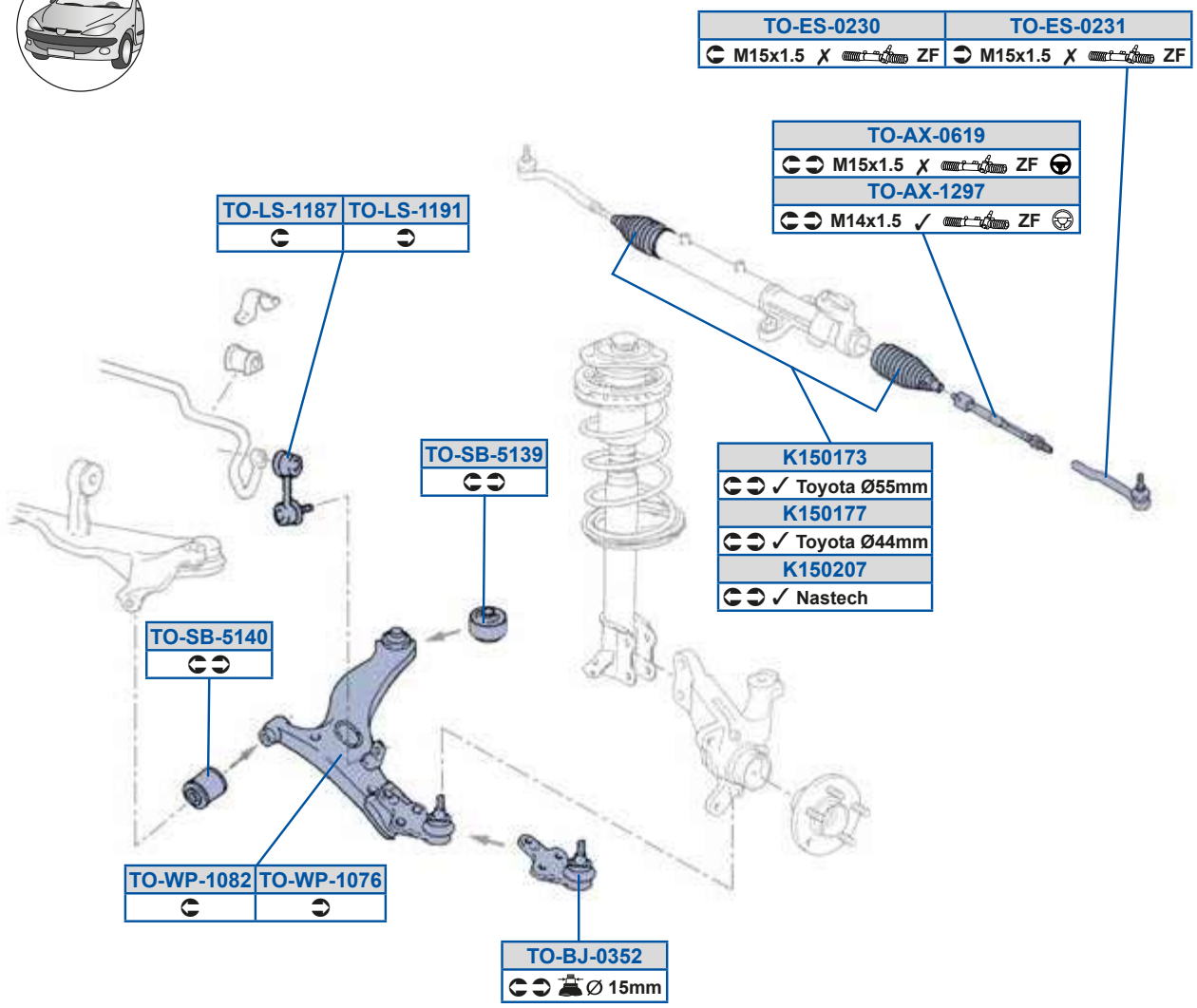

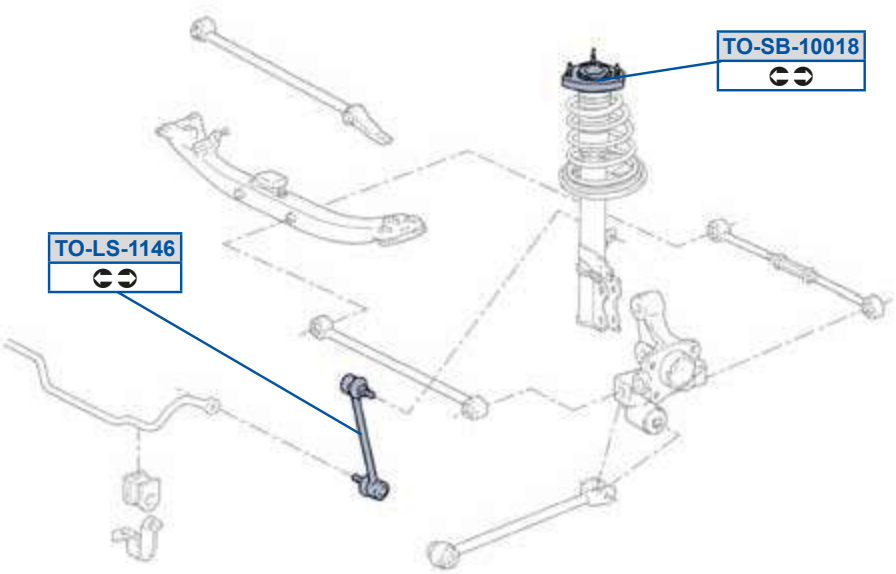

MOOG

Y9C89EA
BCCAC7C7873EF977B7DAF

Y9C89EE
BCCAC7D7873BCCAC7D797

Y9C8>8E
9E8DGG3BCCAC977F7

e_ 5Oi 58D9G
BCC7A9GBAC3BCC7A9GD8C

e_ 5Oi 59>GE
BCC7A7C7873BCC7A9GBEC

e_ 5PX58AC>
BAAA77G7A73BAAA78G7GC

e_ 5Sd58>A8
BC7BE9G7EC3BC7BE9G87C

e_ 5Sd58>A9
BC7BD9G9EC3BC7BD9GAAC

e_ 5Zd599BD
BFFA7897D73BFFA797787

e_ 5Zd599FE
BFF877C7883BFF877C789

e_ 5Zd599G9
BFF877C7893BFF8797797

e_ 5dP59889F
BF7E997797

e_ 5dP5C9AG
BFDCC978B7

e_ 5dP5C9B8
BFDCB978C7

e_ 5h a598ED
BF7DF979D7

e_ 5h a598F>
BF7DG979D7

e_ j _ eO

QSZWQO Q x 0r e; 8r 1	997GA 997GG	QSZWQO Q x éu x 0r e; 8r 1	997GA 8F7GG

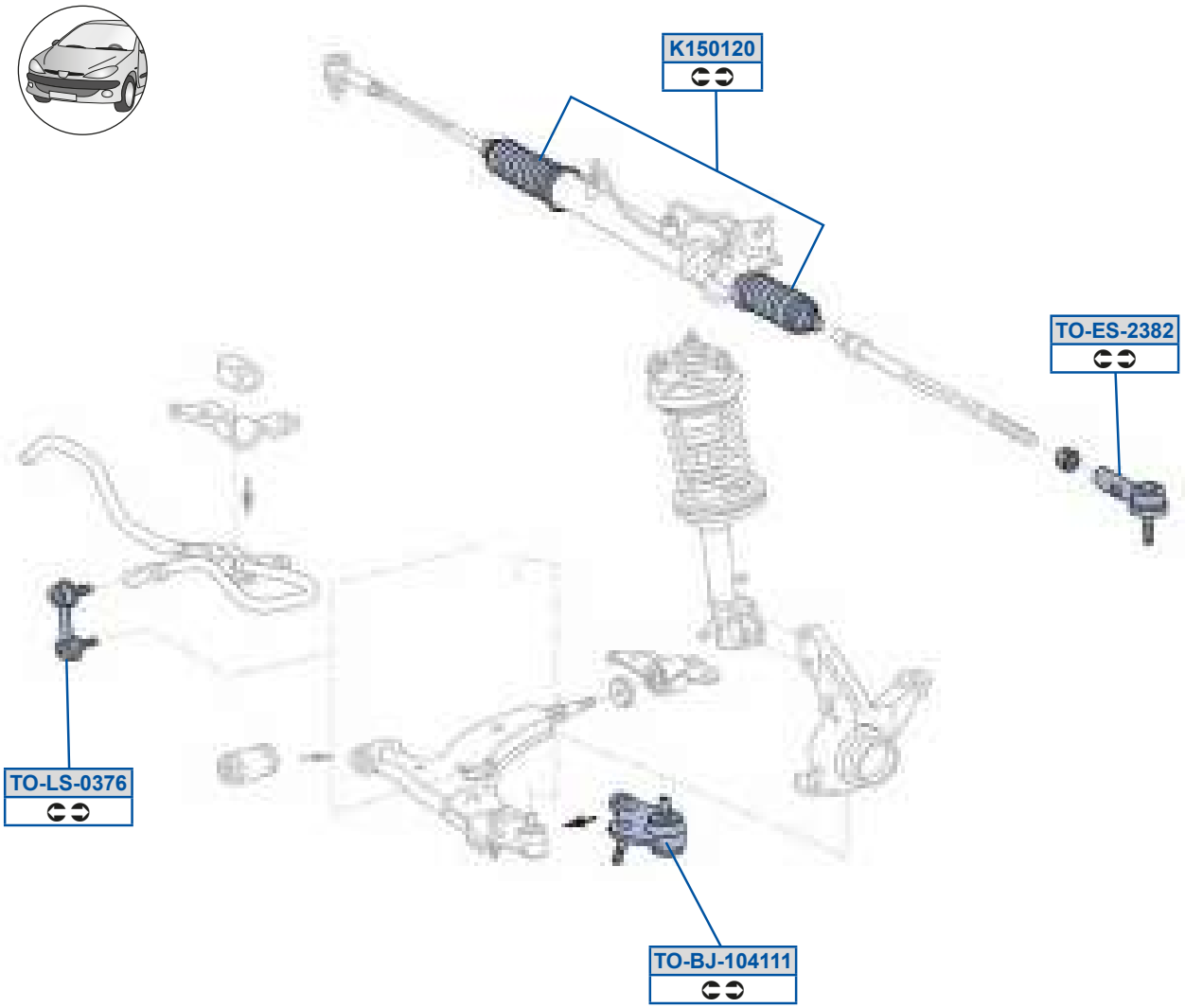

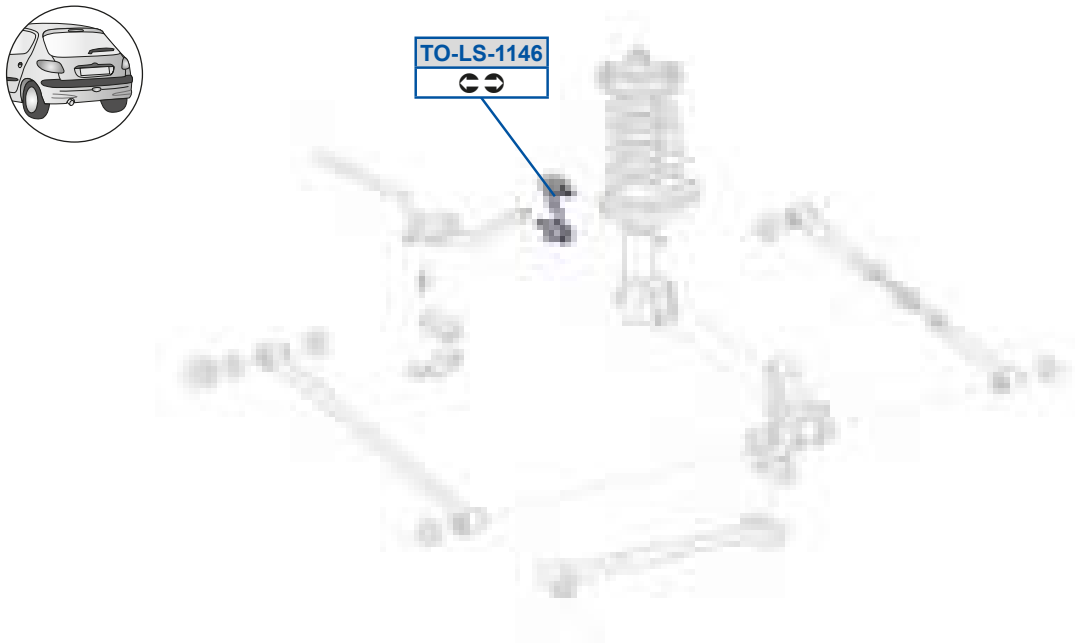

Y9C89>8

B77D993B7DDAC

e_ 5PX598B999

BAAA78G7DC3BAAA78G7DD

e_ 5Sd5>AF>

BC7BD8G8EC3BC7BD9GA7C

e_ 5Zd58AED

BFF97797873BFF97AA787

e_ 5Zd599BD

BFFA7897D73BFFA797787

QSZWQO Q x 0r e; Ar 1	8F7GG 8G78C		

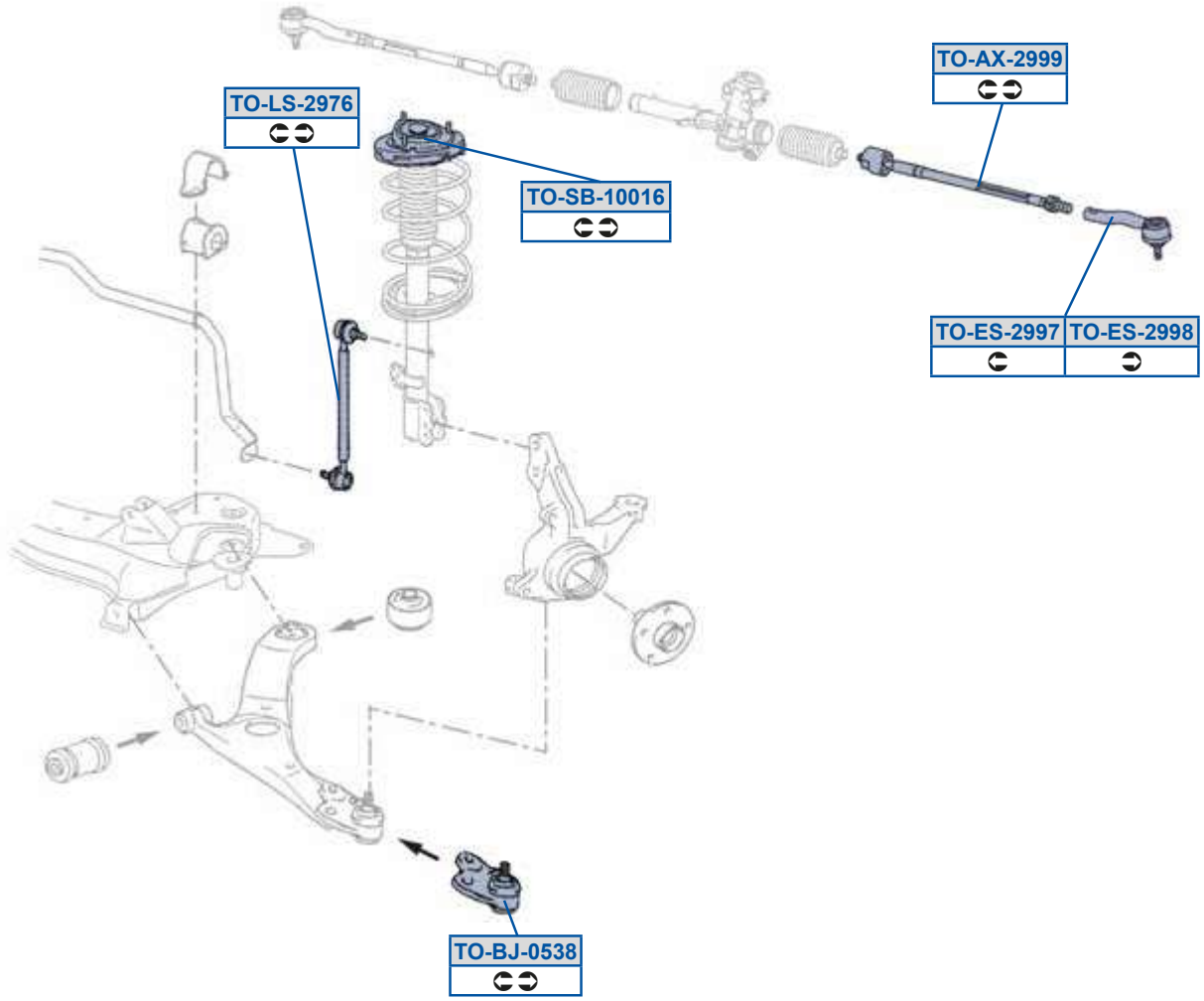

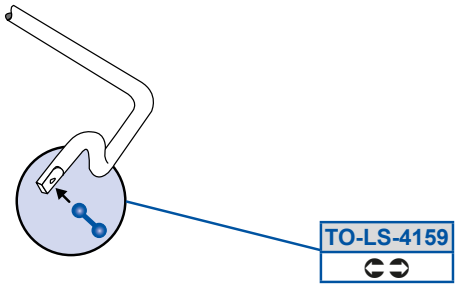

e_ 5Oi 5>GGG
BCC7ABG7AC

e_ 5PX58CAF
BAAA77G7E73BAAA77G7G7

e_ 5Sd5>GGE
BC7BEBG78C

e_ 5Sd5>GGF
BC7BDBG7FC

e_ 5Zd5>GED
BFF97797973BFF97A9787

e_ 5Zd5B9CG
BFF978B7883BFF979B787

e_ 5dP59889D
BFD7G787C73BFD7G79897

e_ j _ eO

Q_c_ZZO Or S98r 1	8D7G9	997GG	Q_c_ZZO Or S99r 1	8B7GE	8D78;
Q_c_ZZO Q t v Or S98r 1	8C7G;	997GG	Q_c_ZZO Q t v Or S99r 1	8B7GE	8978;
Q_c_ZZO Zéy ut v Or S98r 1	8C7G;	8B7GE	Q_c_ZZO Zéy ut v Or S99r 1	8B7GE	8978;
Q_c_ZZO h t ' Or r S99r 1	8B7GE	98789	Q_c_ZZO h t ' Or S98r 1	8C7G;	8B7GE

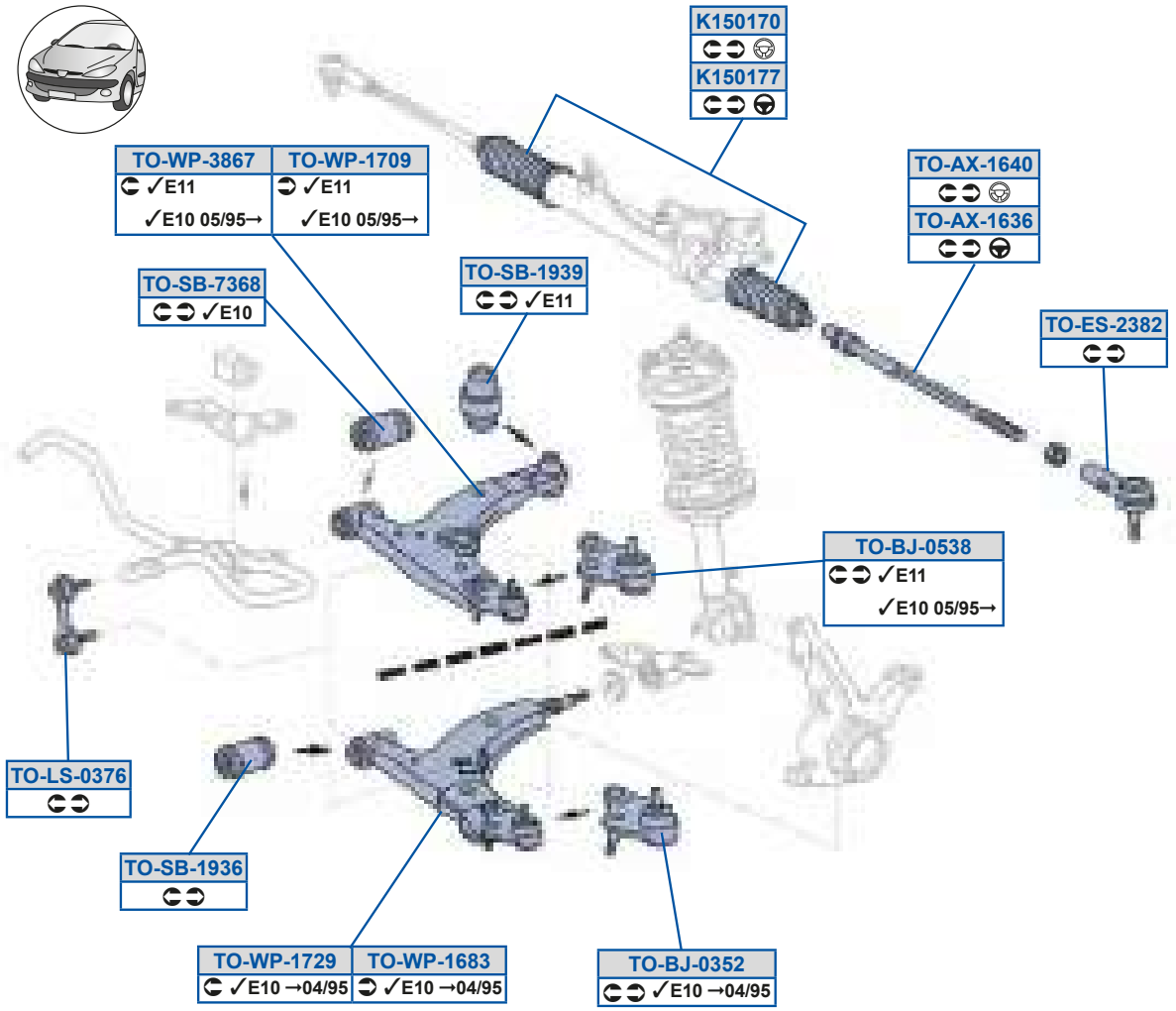

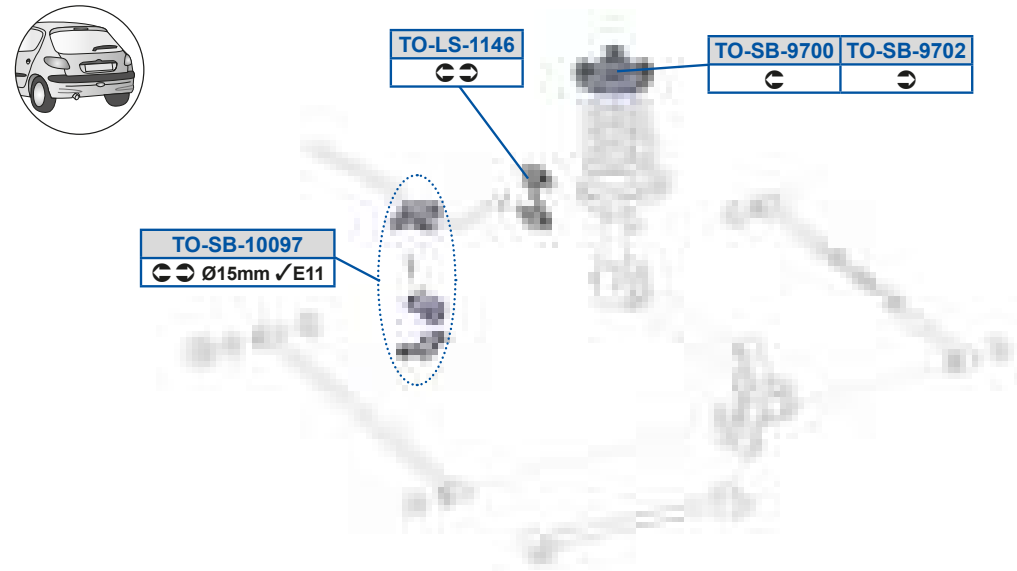

Q 0BE79GG> 5L 897>88>1IS984S99n
e_j_eO

MOOG

Y9C89EE
BCCAC7D7873BCCAC7D797

e_5dP59GAG
BFDCB89897

e_5Oi59DAD
BCC7A8G97C3BCC7A9GAFC

e_5ha59E8G
BF7DF797873BF7DF898D7

e_5Oi59DB8
BCC7A8G98C3BCC7A9GADC

e_5ha5AFDE
BF7DG797873BF7DG898D7

e_5PX58CAF
BAAA77G7E73BAAA77G7G7

e_5Sd5>AF>
BC7BD8G8EC3BC7BD9GA7C

e_5Zd58AED
BFF97797873BFF97AA787

e_5Zd599BD
BFFA7897D73BFFA797787

e_5dP5988GE
BFF8F797D7

e_ j _ eO

Q_c_ZZO 0r S9; r 1	8; 78C	8; 78E	Q_c_ZZO 0l I S9; r 4] RS9; r 4l RS9; r 1	99789	8; 78E
Q_c_ZZO S t x 0r S9; r 1	8A789	8G78D	Q_c_ZZO S t x 0r S9; Xr 4r S9; er 1	9; 789	8F78E
Q_c_ZZO dt 0r S9; r 1	8D78E	8E78E	Q_c_ZZO dt 0r S9; Xr 4r S9; er 1	8A789	8A78F

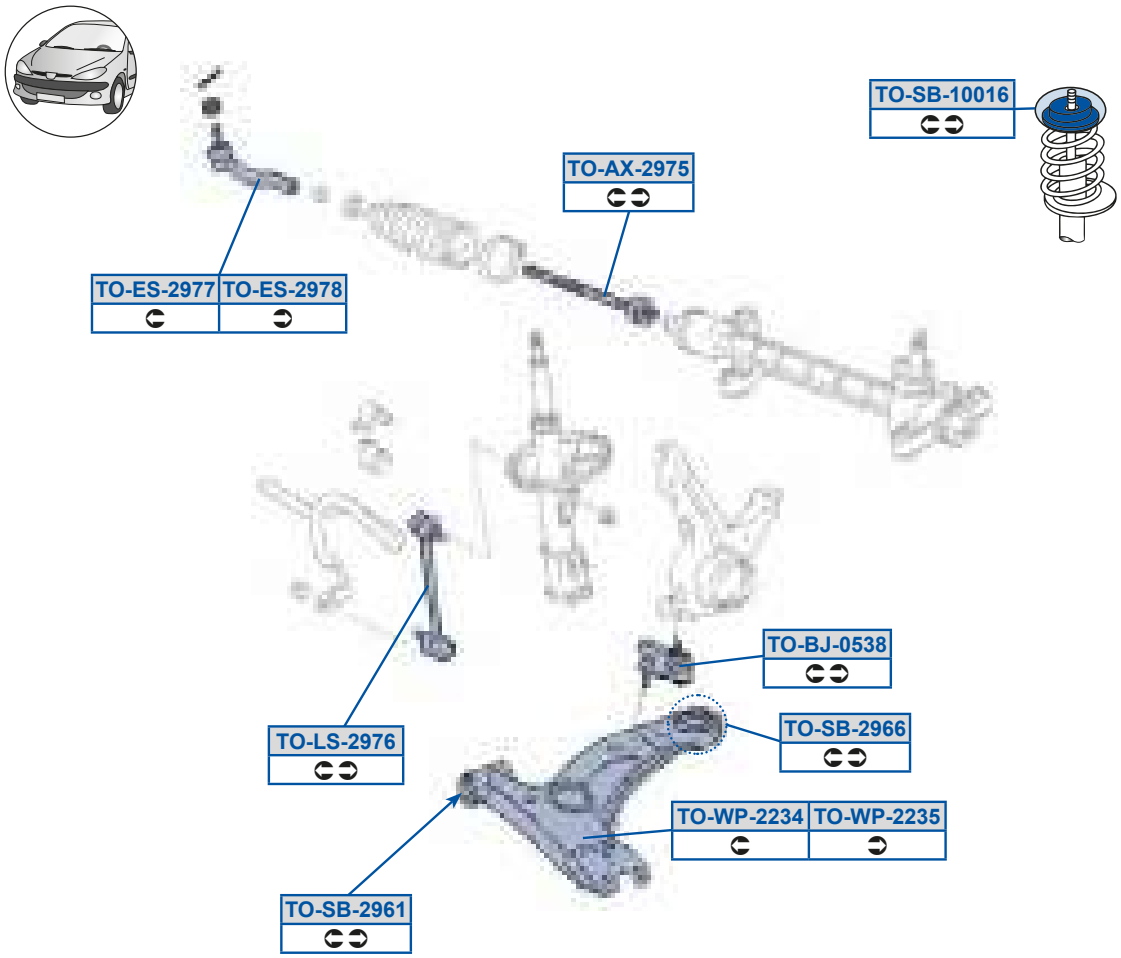

MOOG

e_ 5Oi 5>GEC
BCC7A898A73BCC7A8G9CC

e_ 5PX58CAF
BAAA77G7E73BAAA77G7G7

e_ 5Sd5>GEE
BC7BE7G8C73BC7BE8G88C

e_ 5Sd5>GEF
BC7BD7GAD73BC7BD8G9DC

e_ 5Zd5>GED
BFF97797973BFF97A9787

e_ 5dP59889D
BFD7G787C73BFD7G79897

e_ 5dP5>GD9
BF7DF899D7 /40

e_ 5dP5>GDD
BF7DF7C7E7 /40

e_ 5h a5>>AB
BF7DG797A73BF7DG797E7

e_ 5h a5>>AC
BF7DF797A73BF7DF797E7

Q_c_ZZO dt 0r S9Cr 1	9978D	Q_c_ZZO dt 0S9Cr 1	9978D

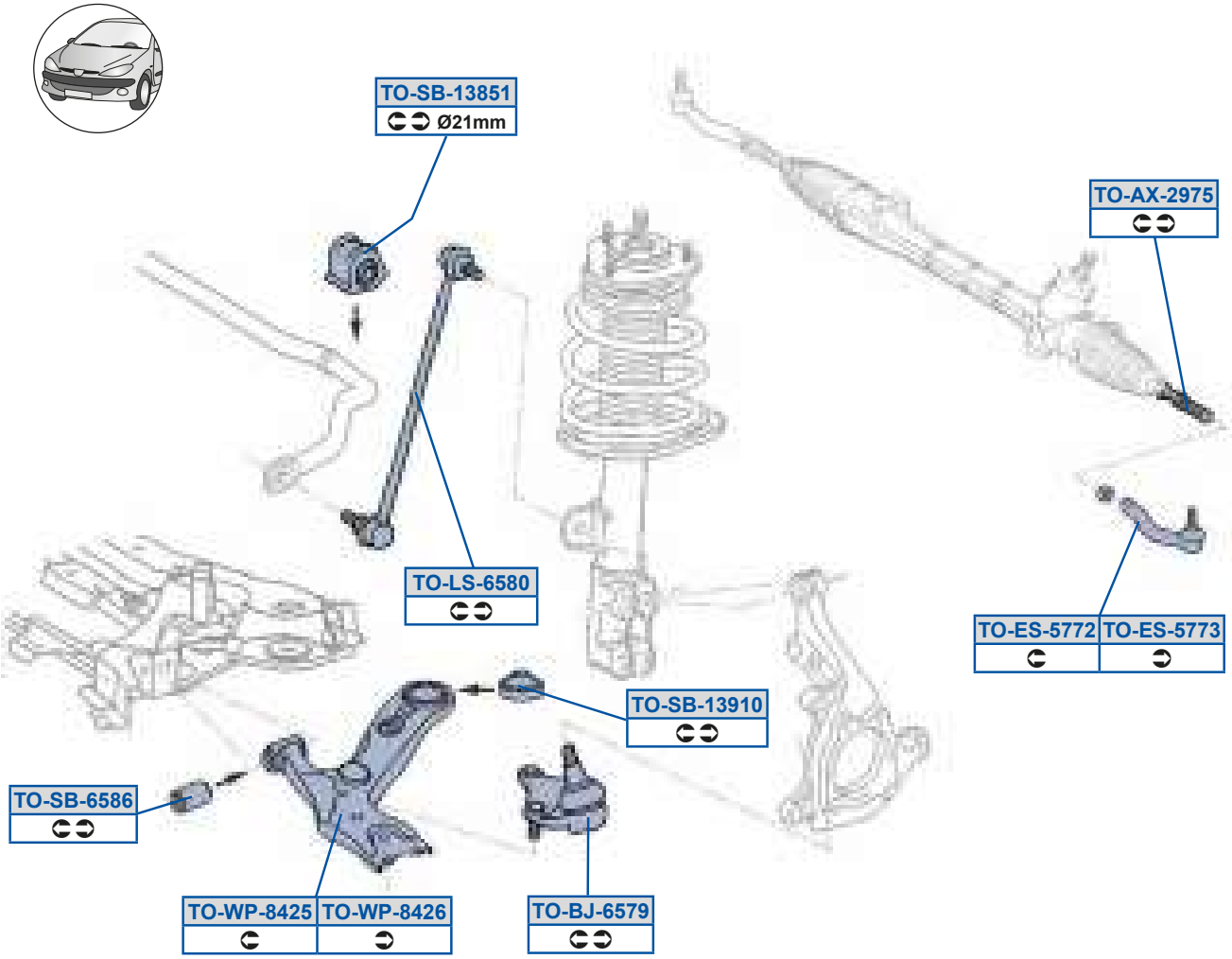

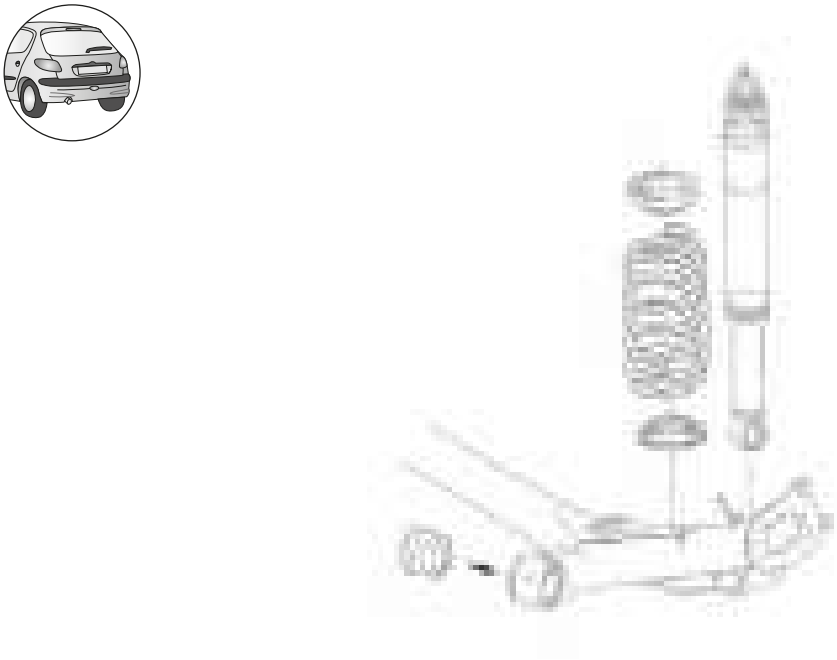

MOOG

e_ 5Oi 5>GEC
BCC7A898A73BCC7A8G9CC

e_ 5PX5DCEG
BAAA77GDA73BAAA78G9BC

e_ 5Sd5CEE>
BC7BE7G9E73BC7BE8G97C

e_ 5Sd5CEEA
BC7BD7GCE73BC7BD8GB7C

e_ 5Zd5DCF8
BFF97797E73BFF97B97A7

e_ 5dP59AFC9
BFF8C798B73BFF8C7C8A7

e_ 5dP59AG98
BF7DF89A77 /40

e_ 5dP5DCFD
BF7DFB97C7 /40

e_ 5h a5FB>C
BF7DG798A73BF7DG7T7A7

e_ 5h a5FB>D
BF7DF798A73BF7DF7T7A7

e_ j _ eO

Q_c_ZZO gx 0r S9; r 1	8E789 8; 78B	Q_c_ZZO gx 0l RS9; r 4QRS9; r 1	8G789 8E78B

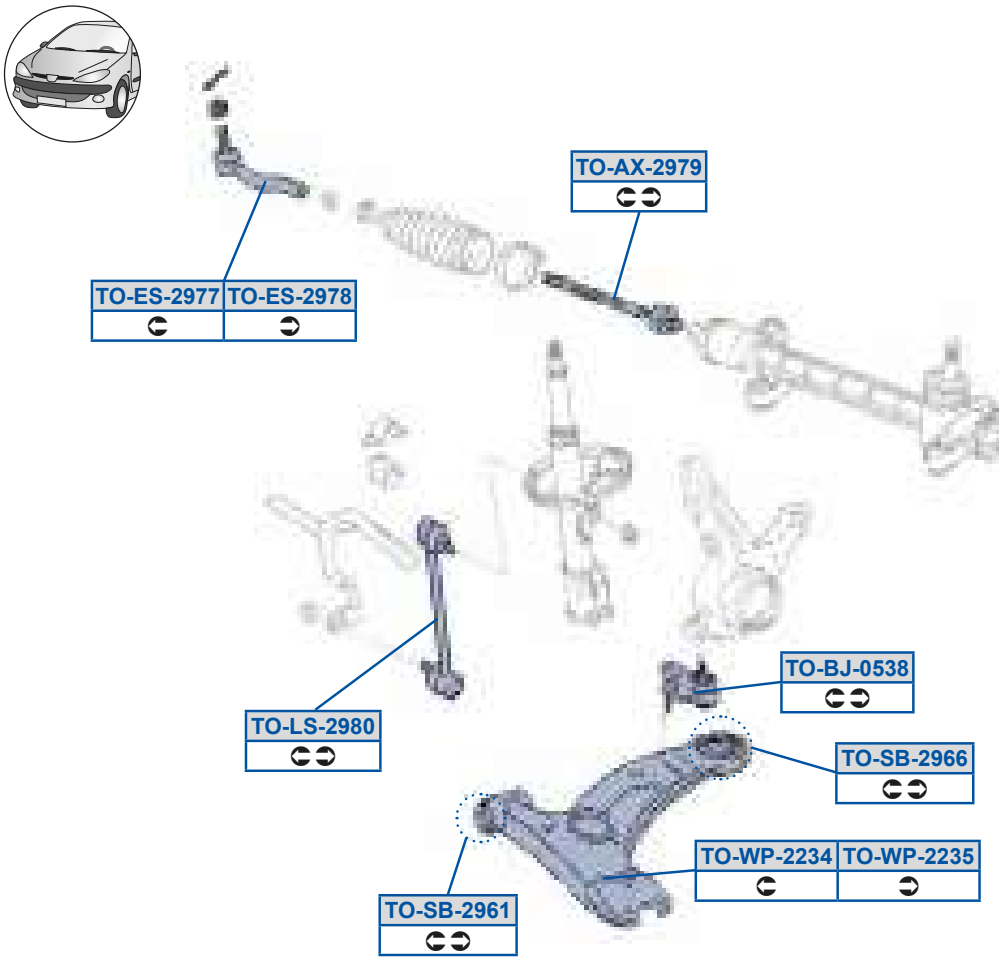

MOOG

e_ 5Oi 5>GEG
BCC7A898A73BCC7A8G9CC

e_ 5PX58CAF
BAAA77G7E73BAAA77G7G7

e_ 5Sd5>GEE
BC7BE7G8C73BC7BE8G88C

e_ 5Sd5>GEF
BC7BD7GAD73BC7BD8G9DC

e_ 5Zd5>GF8
BFF97BE787

e_ 5dP5>GD9
BF7DF899D7 /40

e_ 5dP5>GDD
BF7DF7C7E7 /40

e_ 5h a5>>AB
BF7DG797A73BF7DG797E7

e_ 5h a5>>AC
BF7DF797A73BF7DF797E7

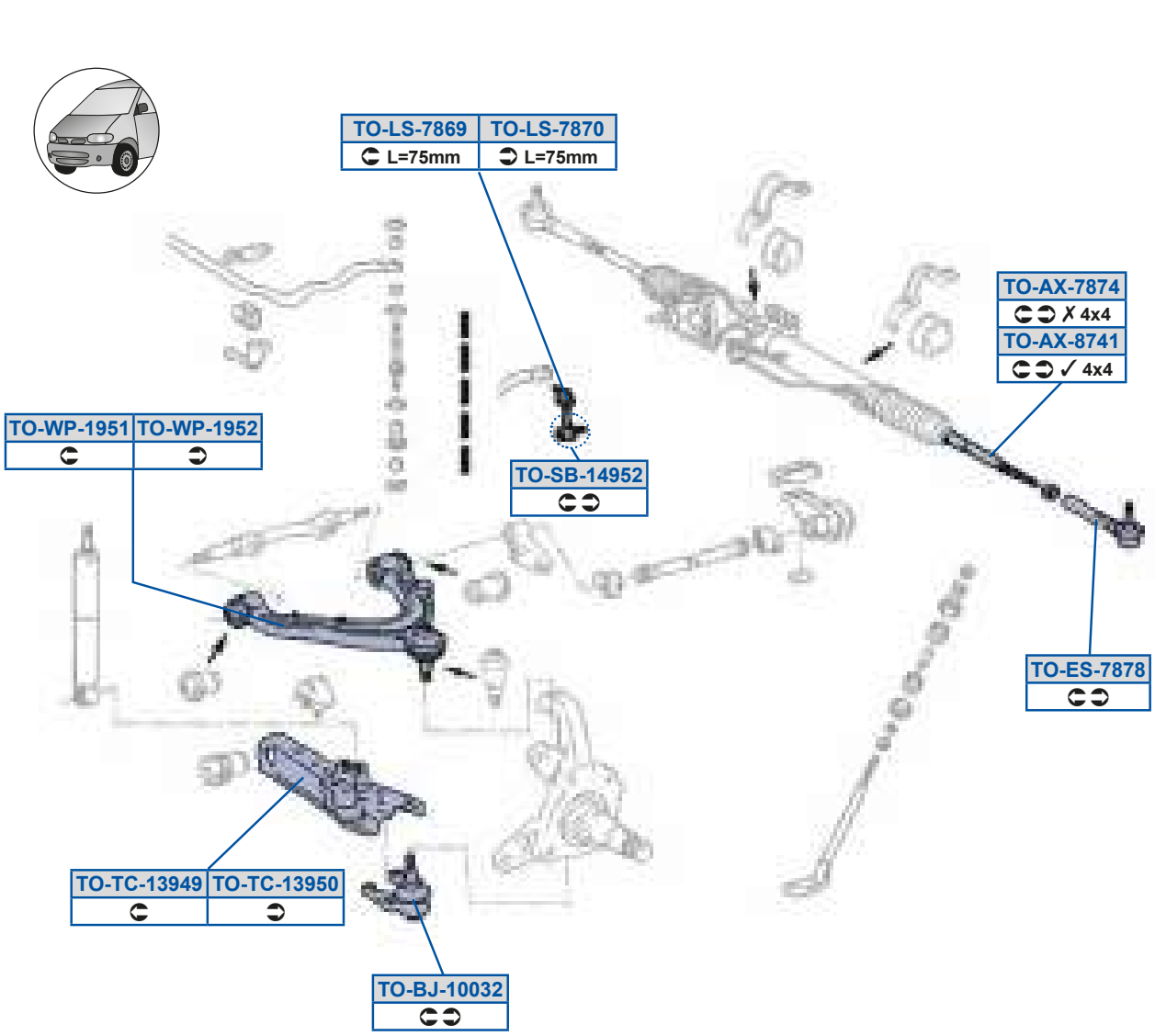
TO-LS-7869
L=75mm
TO-LS-7870
L=75mm
TO-AX-7874
✗ 4x4
TO-AX-8741
✓ 4x4
TO-WP-1951
TO-WP-1952
TO-SB-14952
TO-ES-7878
TO-TC-13949
TO-TC-13950
TO-BJ-10032

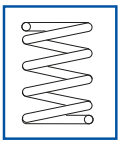

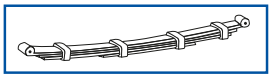

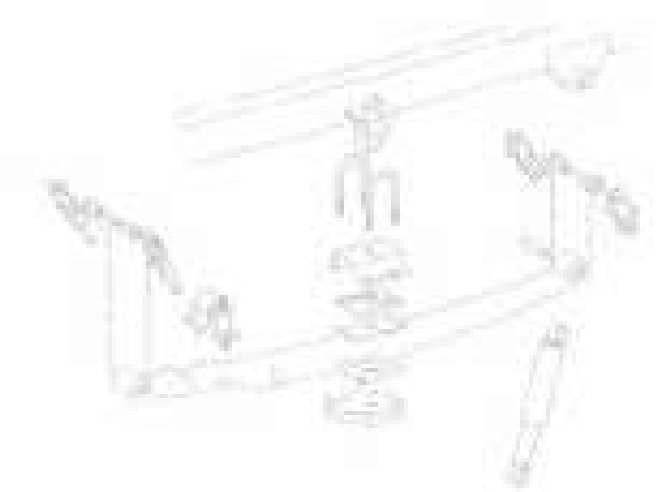

e_5Oi5EFEB
BCC7A9GCDC3BCC7A9GCEC

e_5PX5988A>
BAAA79G89C3BAAA79G8CC

e_5Sd5EFEF
BC7BD9GA9C

e_5Zd598DF9
BFF978E7973BFF978E7A7

e_5Zd5EFDG
BFF879D7A7

e_5Zd5EFE8
BFF979D7A7

e_5dP59BGC>
BFF879D7A7 /40

e_5eQ59AGBG
BF7DG9D8D7

e_5eQ59AGC8
BF7DF9D8D7

e_5ha59GC9
BF7DE9G7EC3BF7DE9G7FC

e_5ha59GC>
BF7DE9G7FC

e_ j _ eO

VVZf i WWaév	0eU] 94UU] 94; 4Yf] 94; 1	8; 78C		

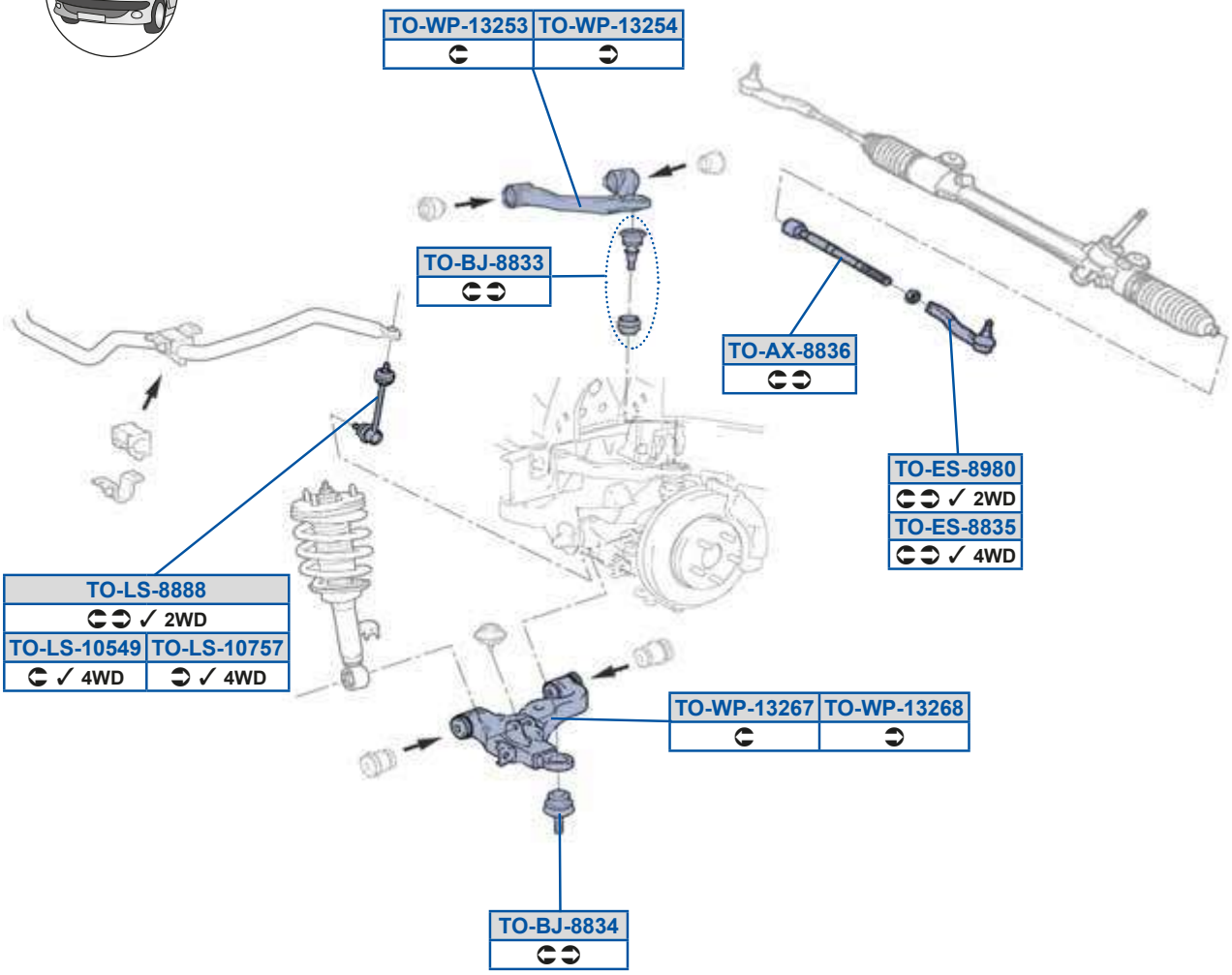

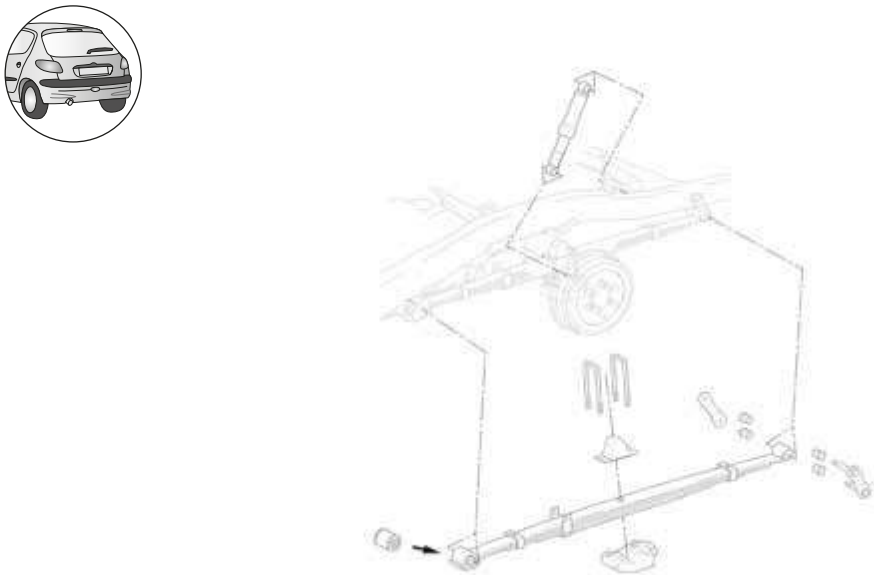

MOOG

e_ 5Oi 5FFAD
BCC7A7GA983BCC7A7GAA7

e_ 5PX5FFAA
BAA877G78C3BAA877G7A7

e_ 5PX5FFAB
BAAA77G9GC3BAAA77GC87

e_ 5Sd5FFAC
BC7BD7G9F73BC7BD7G9F8

e_ 5Sd5FGF8
BC7BD7G9C73BC7BD7G9C8

e_ 5Zd598CBG
BFF877Y787

e_ 5Zd598ECE
BFF977Y7A73BFF97D77C7

e_ 5Zd5FFFF
BFF977Y787

e_ 5h a59A>CA
8FDA77Y7B7

e_ 5h a59A>CB
BFD877Y7B7

e_ 5h a59A>DE
BF7DG7Y7B7

e_ 5h a59A>DF
BF7DF7Y7B7

ZO] R Qcf WSc acOR_ Or X9; r 1	8G78; 8F798		

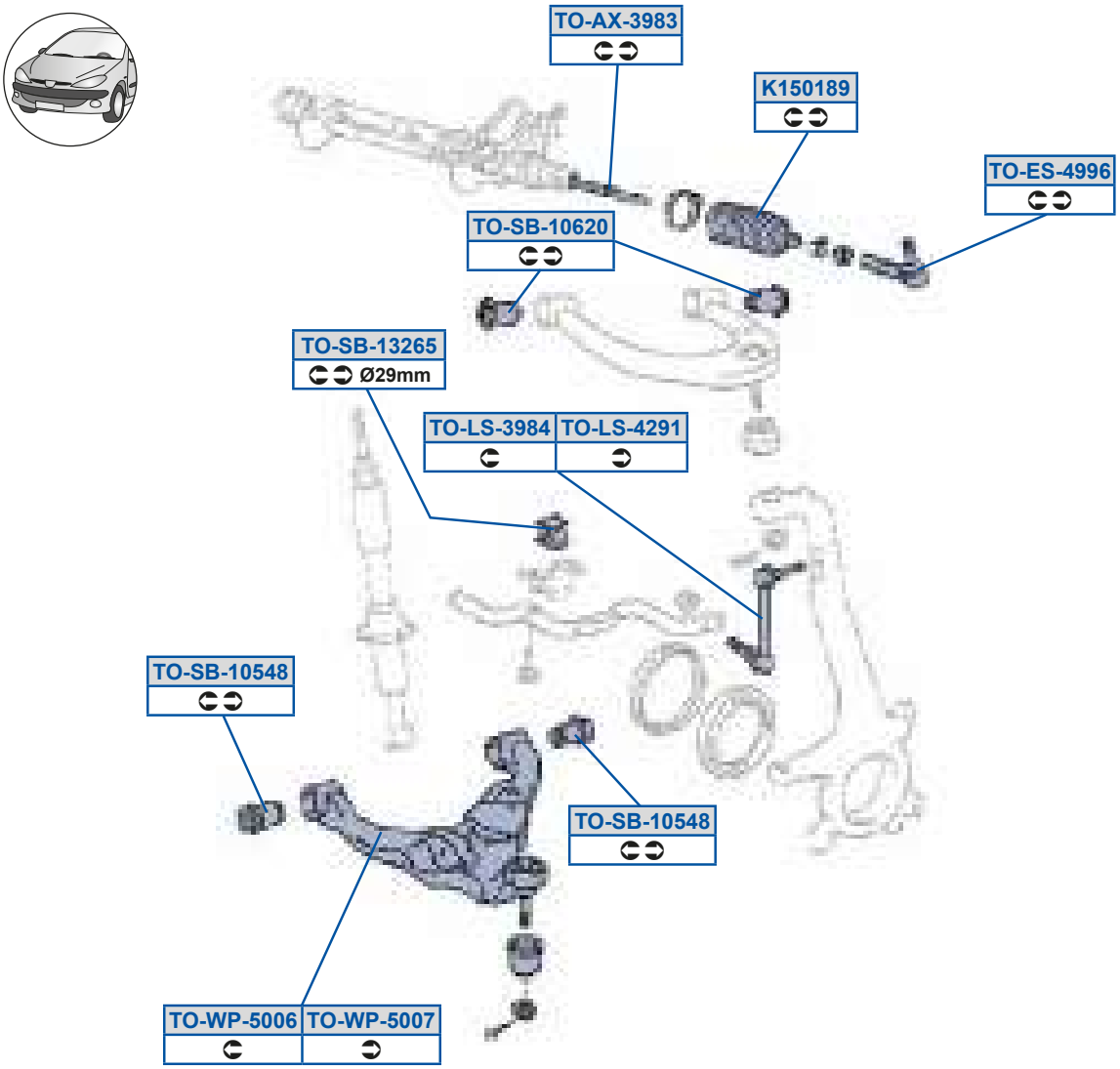

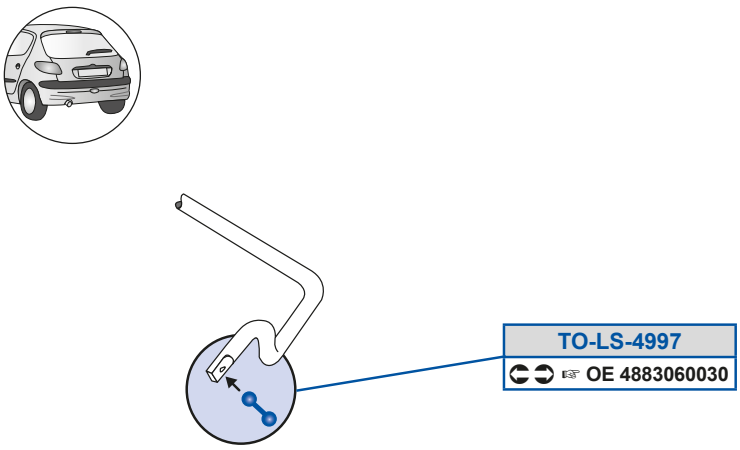

Y9C89FG
BCCAC9D7973BCCAC9D7A7

e_ 5dP598D>8
BFDA9D7797

e_ 5Oi 5AGFA
BCC7AAG9AC3BCC7AAG9DC

e_ 5dP59A>DC
BFF8CD78F73BFF8CD7AC7

e_ 5PX5BGG9
BFD87D77A7 /40

e_ 5h a5C88D
BF7DGD7787

e_ 5Sd5BGGD
BC7BDAGC7C

e_ 5h a5C88E
BF7DFD7787

e_ 5Zd5AGFB
BFF877Y7873BFF87D77B7

e_ 5Zd5B>G9
BFF97D77C73BFFA7D78F7

e_ 5Zd5BGGE
BFFA7D77A7

e_ 5dP598CBF
BFDCCD77A7

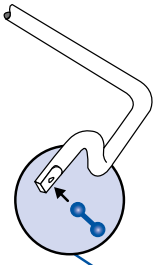

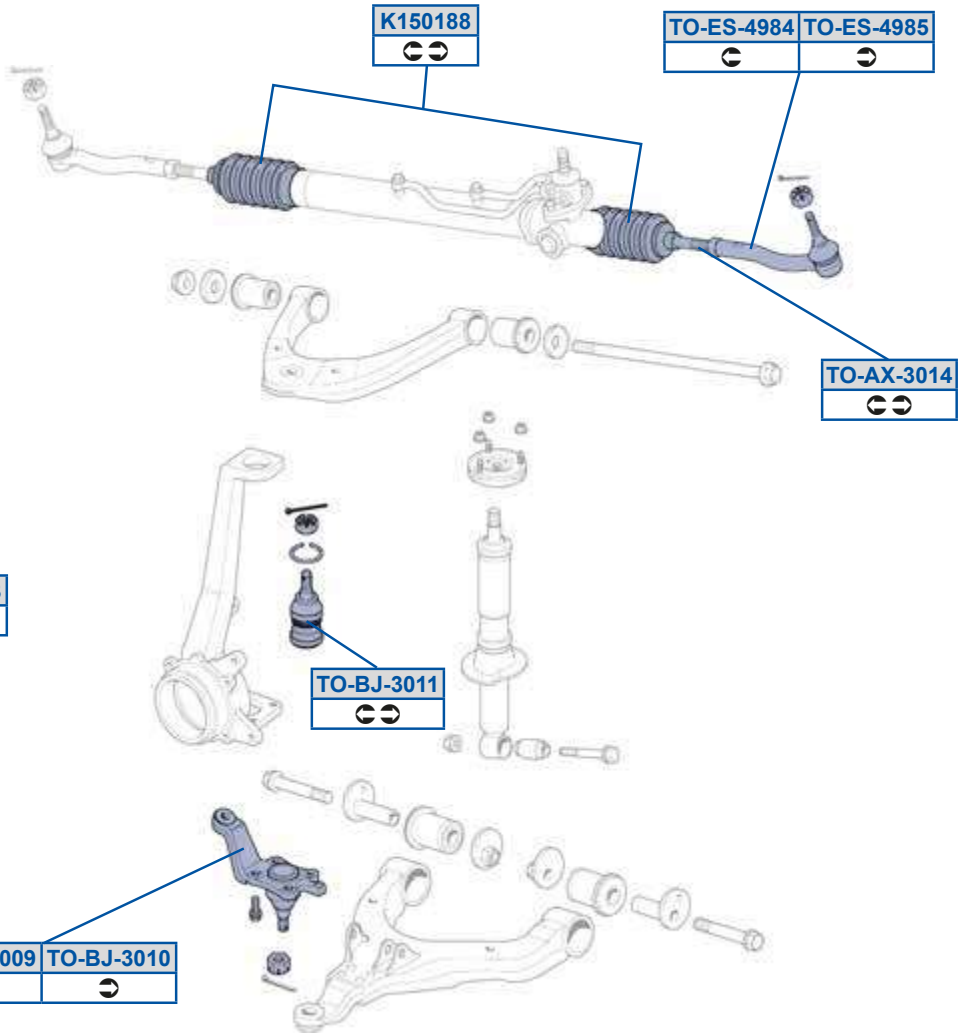
K150188
TO-ES-4984
TO-ES-4985
TO-AX-3014
TO-LS-4983
TO-BJ-3011
TO-BJ-3009
TO-BJ-3010

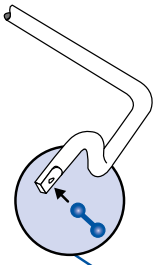

TO-LS-4986

Y9C89FF
BCCACD7787

e_ 5Oi 5A89B
BC7BDAG98C /40

e_ 5PX5A88G
BAAB7AGA9C3BAAB7AGACD

e_ 5PX5A898
BAAA7AGB8C3BAAA7AGBDD

e_ 5PX5A899
BAA87AG78D3BAA87AG7FC

e_ 5Sd5BGFB
BC7BEAG98C

e_ 5Sd5BGFC
BC7BDAGAAC

e_ 5Zd5BGFA
BFF97AC7A73BFF97OR787

e_ 5Zd5BGFD
BFFA7AC797

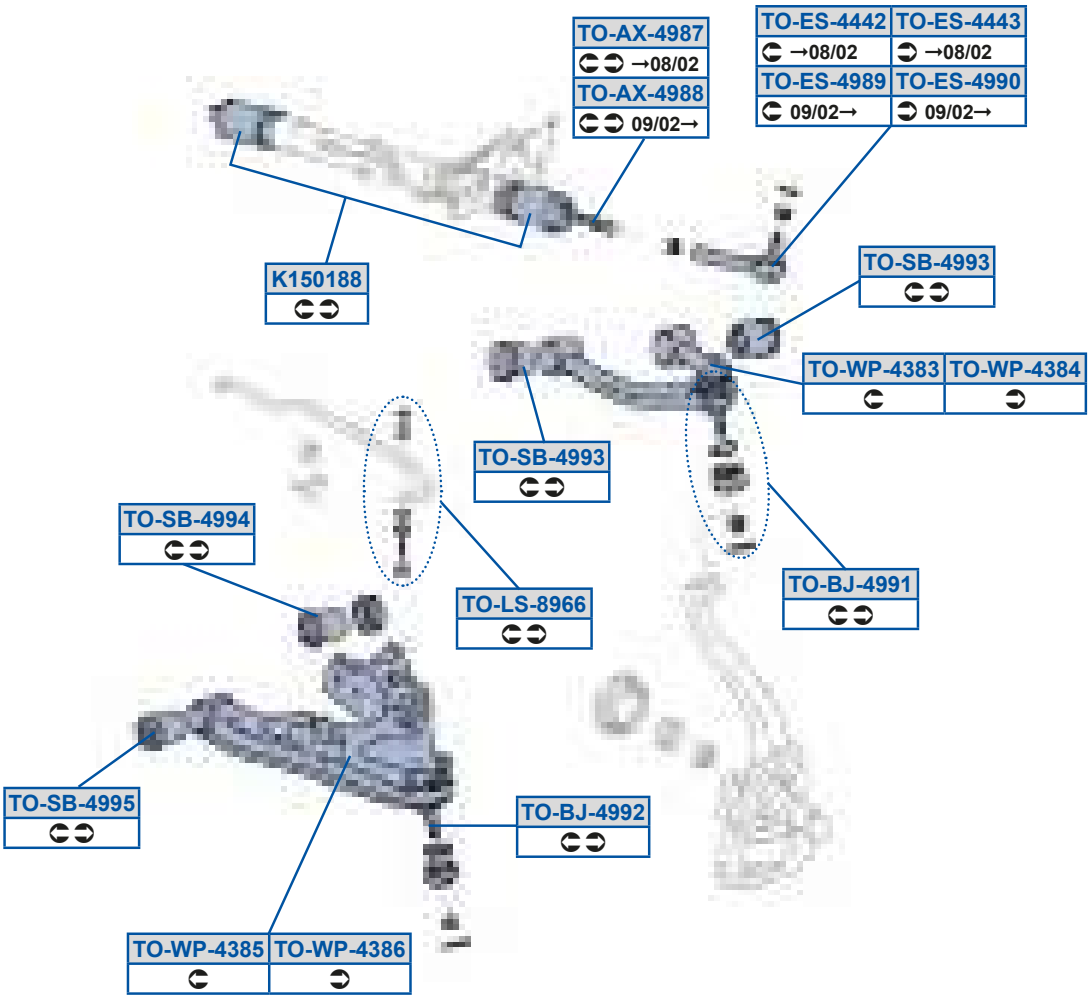
TO-AX-4987
→08/02
TO-AX-4988
09/02→
TO-ES-4442
→08/02
TO-ES-4443
→08/02
TO-ES-4989
09/02→
TO-ES-4990
09/02→
K150188
TO-SB-4993
TO-WP-4383
TO-WP-4384
TO-SB-4993
TO-SB-4994
TO-LS-8966
TO-BJ-4991
TO-SB-4995
TO-BJ-4992
TO-WP-4385
TO-WP-4386

Y9C89FF
BCCACD7787

e_ 5Sd5BGG8
BC7BDDG97C

e_ 5h a5BAFD
BFD97D7787

e_ 5Oi 5BGFE
BCC7ADG78C

e_ 5Zd5FGDD
BFF97D77A83BFF97D77A9

e_ 5Oi 5BGFF
BCC7ADG79C

e_ 5dP5BGGA
BFDA9D7787

e_ 5PX5BGG9
BFD87D77A7 /40

e_ 5dP5BGGB
BFDCBD7787

e_ 5PX5BGG>
BFD97D7787 /40

e_ 5dP5BGGC
BFDCCD7787

e_ 5Sd5BBB>
BC7BDDG8GC

e_ 5h a5BAFA
BFDA7D7787

e_ 5Sd5BBBA
BC7BDDG877

e_ 5h a5BAFB
BFD87D77A7

e_ 5Sd5BGFG
BC7BEDG88C

e_ 5h a5BAFC
BFDB7D7787

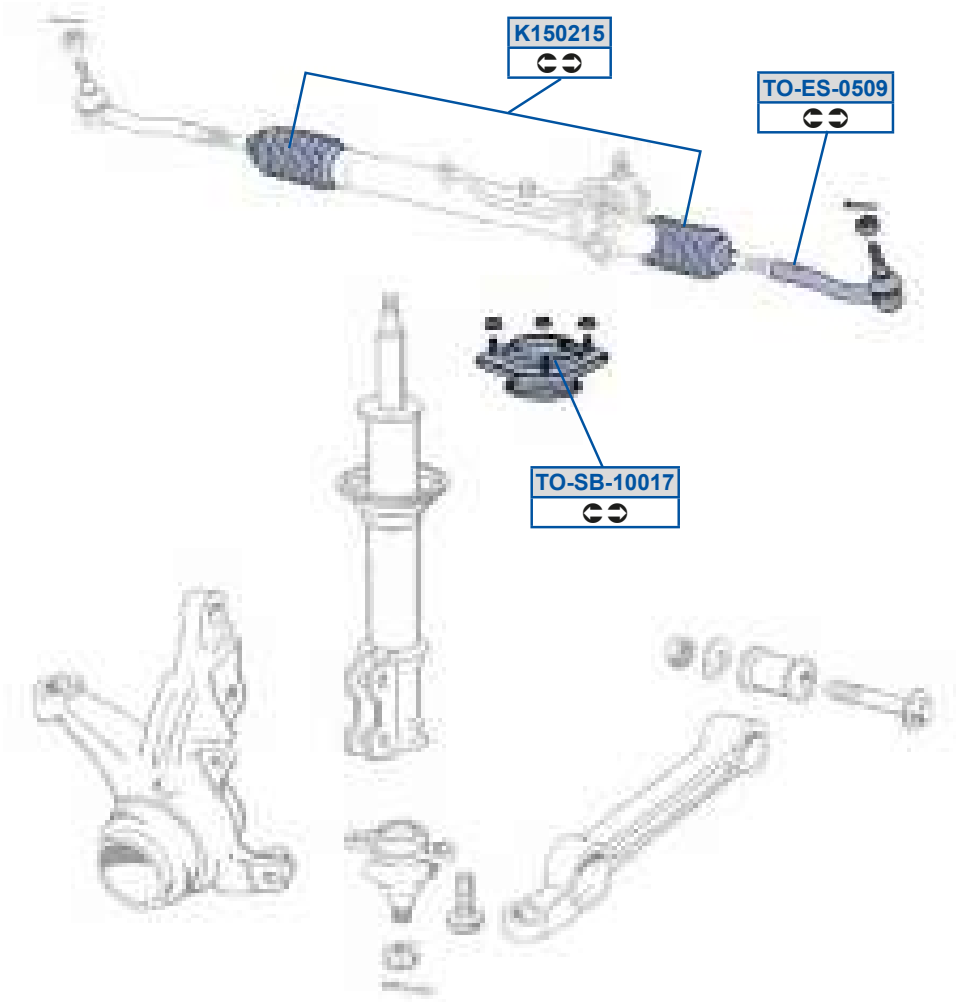
K150215
TO-ES-0509
TO-SB-10017

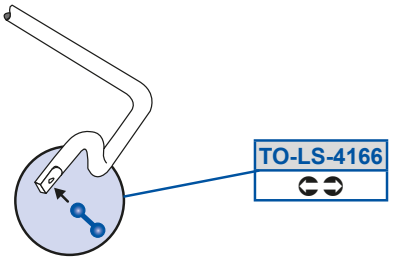
TO-LS-4166

Y9C8>9C

BCCACC9787

e_ 5Sd58C8G

BC7BD8G97C3BC7BD8G97D

e_ 5Zd5B9DD

BFFA78E7E7

e_ 5dP59889E

BFD7G8E7A73BFD7G8E7B7

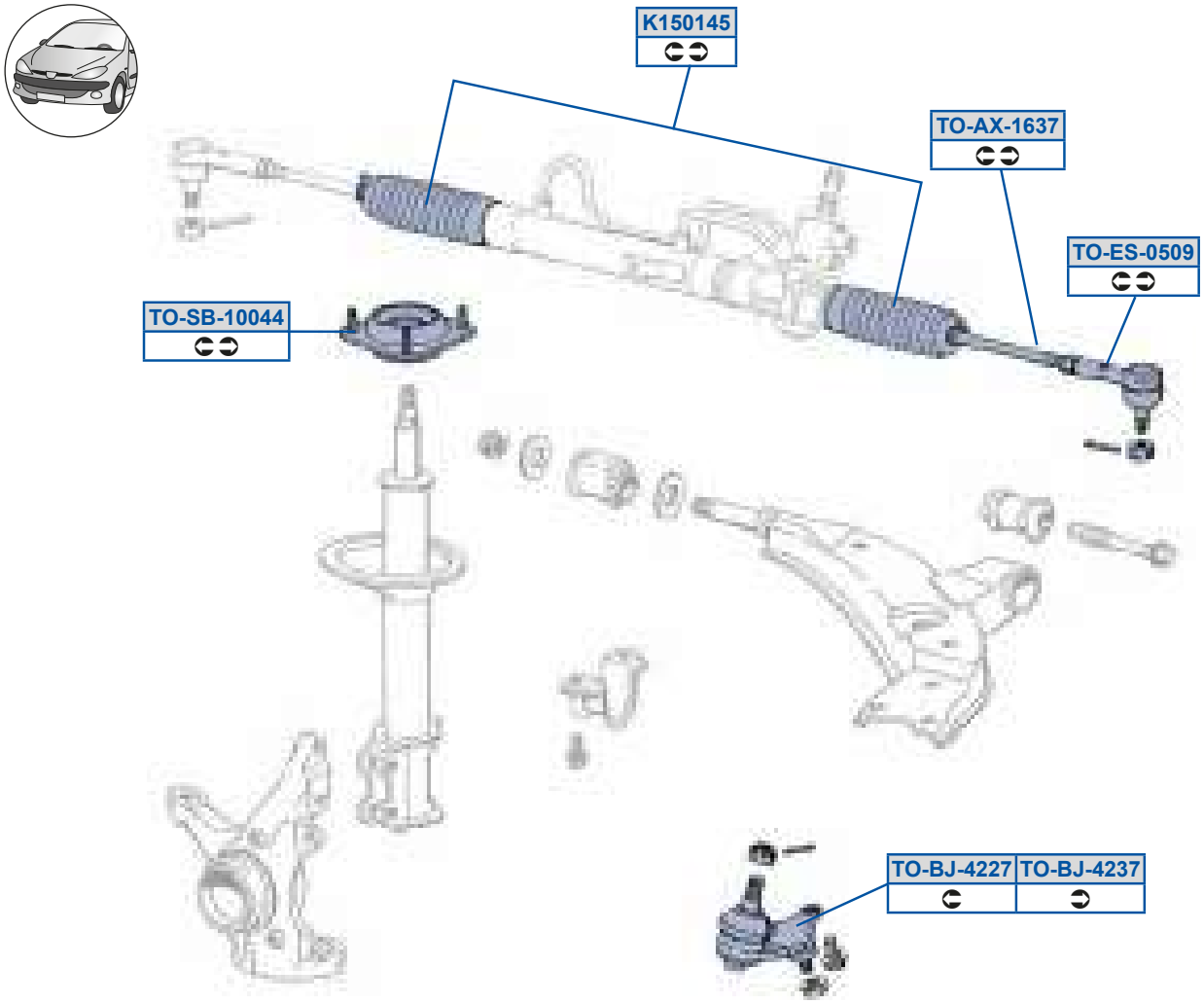
K150145
TO-AX-1637
TO-ES-0509
TO-SB-10044
TO-BJ-4227
TO-BJ-4237

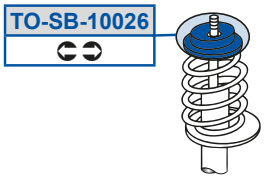
TO-SB-10026

Y9C89BC
BCCAC877D73BCCAC8D7A7

e_ 5Oi 59DAE
BCC7A8G8CC3BCC7A8G8GC

e_ 5PX5B>>E
BAAB78G79C

e_ 5PX5B>AE
BAAA78G7FC

e_ 5Sd58C8G
BC7BD8G97C3BC7BD8G97D

e_ 5dP5988>D
BFEC78D887

e_ 5dP5988BB
BFD7G8D8B73BFD7G8DB87

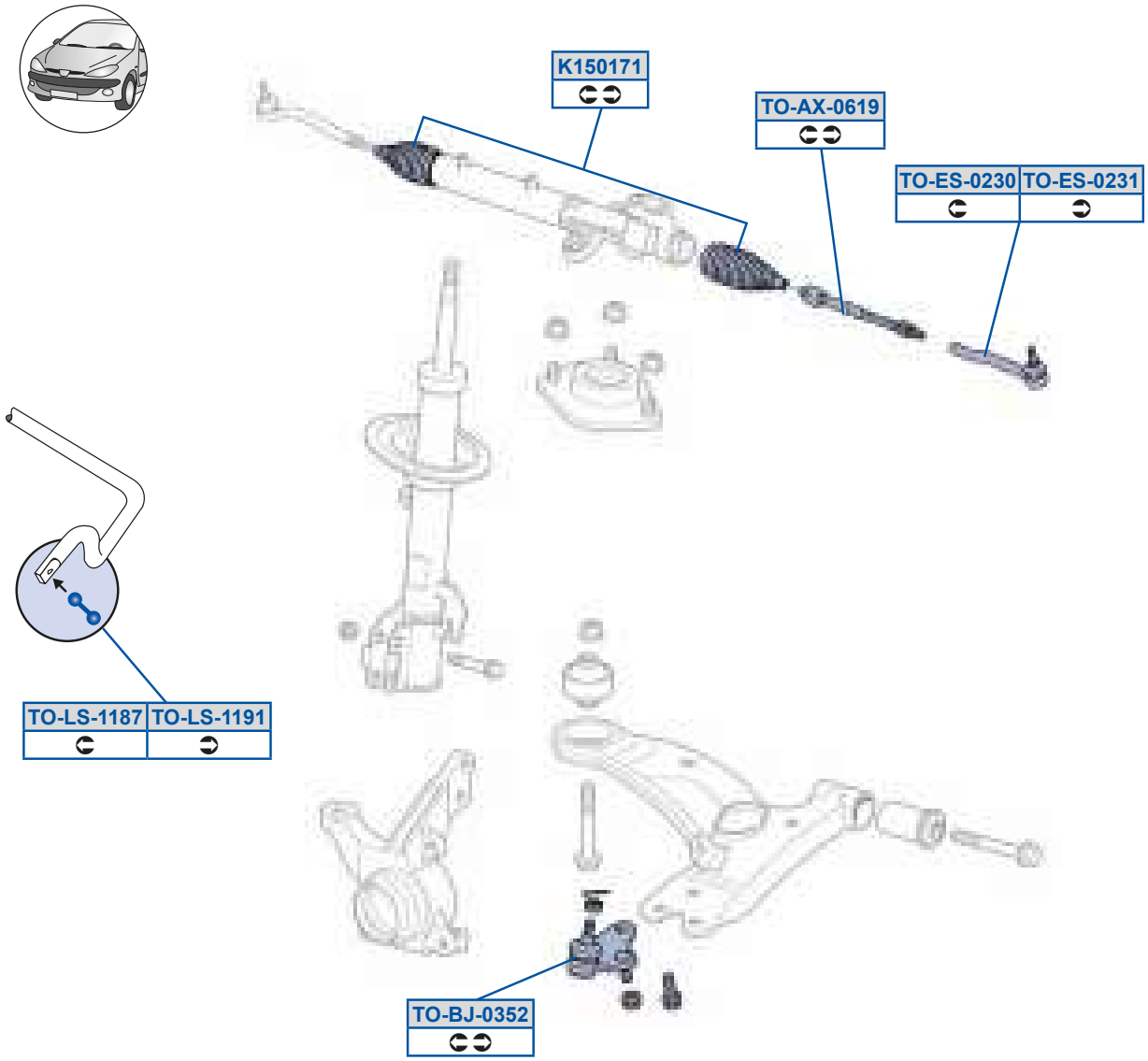
K150171
TO-AX-0619
TO-ES-0230
TO-ES-0231
TO-LS-1187
TO-LS-1191
TO-BJ-0352

Y9C89E9
BCCAC7C797

e_ 5Oi 58D9G
BCC7A9GBAC3BCC7A9GD8C

e_ 5PX58AC>
BAAA77G7A73BAAA78G7GC

e_ 5Sd58>A8
BC7BE9G7EC3BC7BE9G87C

e_ 5Sd58>A9
BC7BD9G9EC3BC7BD9GAAC

e_ 5Zd599FE
BFF877C7883BFF877C789

e_ 5Zd599G9
BFF877C7893BFF8797797

e_ j _ eO

acSgW0 0rc9r4rc; r1	8G7GA 9; 7GE	acSgW0 0eQc; r4eQc9r1	8C7G8 8F788

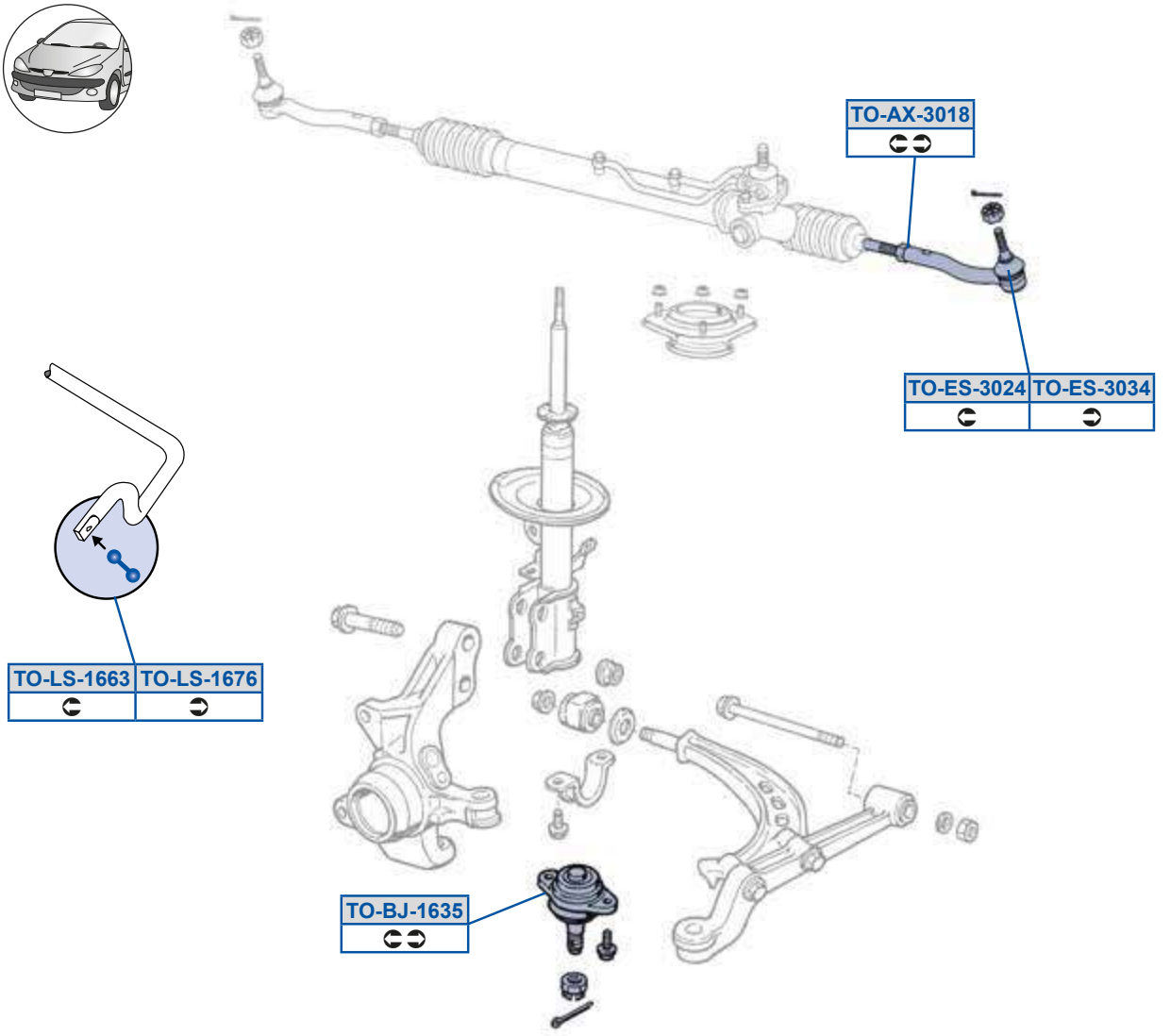

a v z WBL 8F7>8881lpc9p4pc>pn

e_ 5Oi 5A89F
BCC7A9G9FC3BCC7A9G9GC

e_ 5PX59DAC
BAAA79G9AC

e_ 5Sd5A8>B
BC7BE9G7DC

e_ 5Sd5A8AB
BC7BD9G9AC

e_ 5Zd59DDA
BFF879F7873BFF879F797

e_ 5Zd59DED
BFF979F7873BFF979F7A7

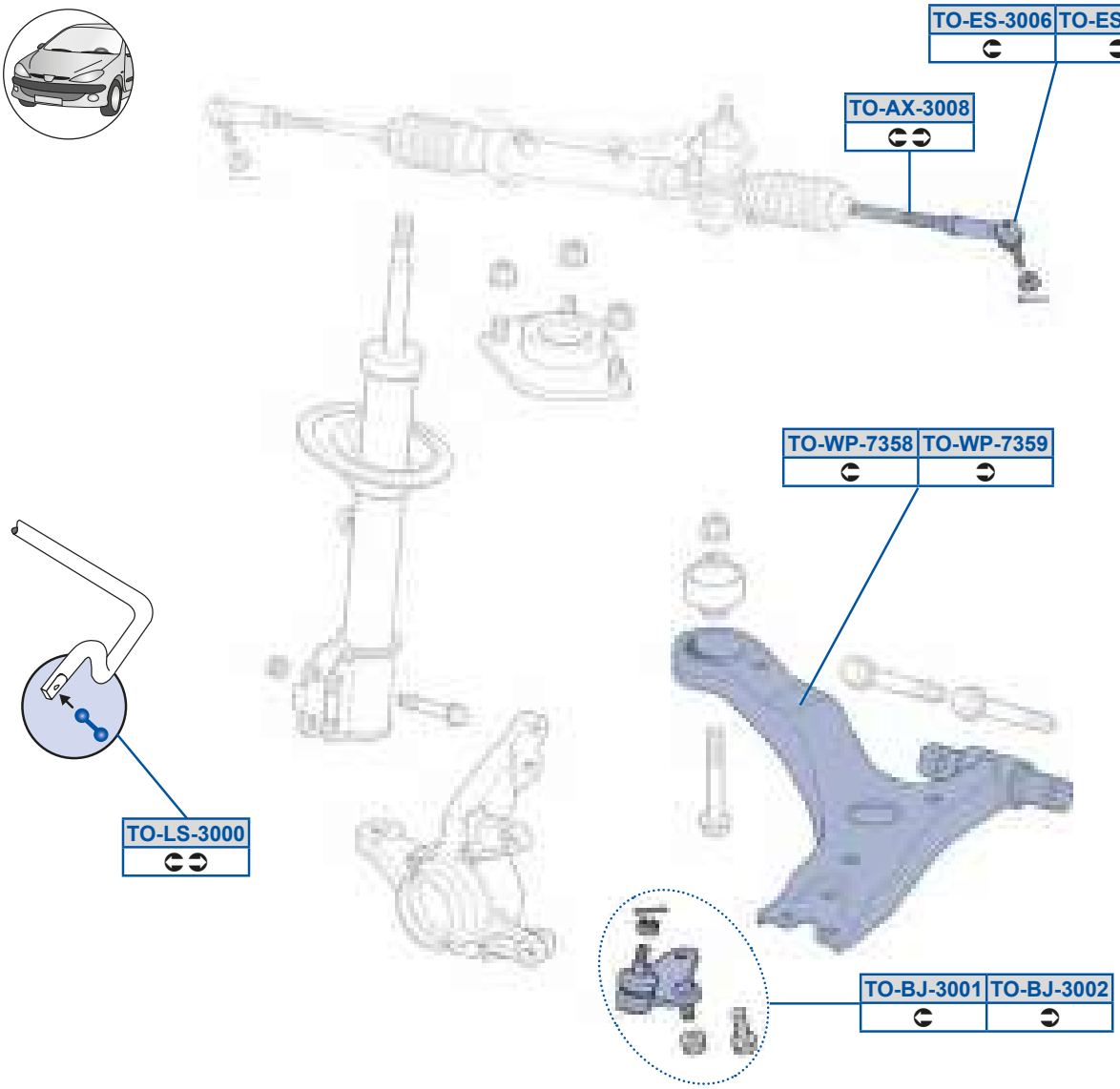

a v zr WW0BF7>888 5L1lpc Apn

e_ j _ eO

MOOG

e_ 5Oi 5A88F
BCC7A9GEDC3BCC7B9F7A7

e_ 5PX5A889
BAAB77G7873BAAB79G8EC

e_ 5PX5A88>
BAAA77G8D73BAAA79GB7C

e_ 5Sd5A88D
BCBE79G8FC

e_ 5Sd5A88E
BCBD79GB9C

e_ 5Zd5A888
BFF977D7B73BFF979F7C7

e_ 5h a5EACF
BF7DG47D7E73BF7DG9F897

e_ 5h a5EACG
BF7DF47D7E73BF7DF8F897

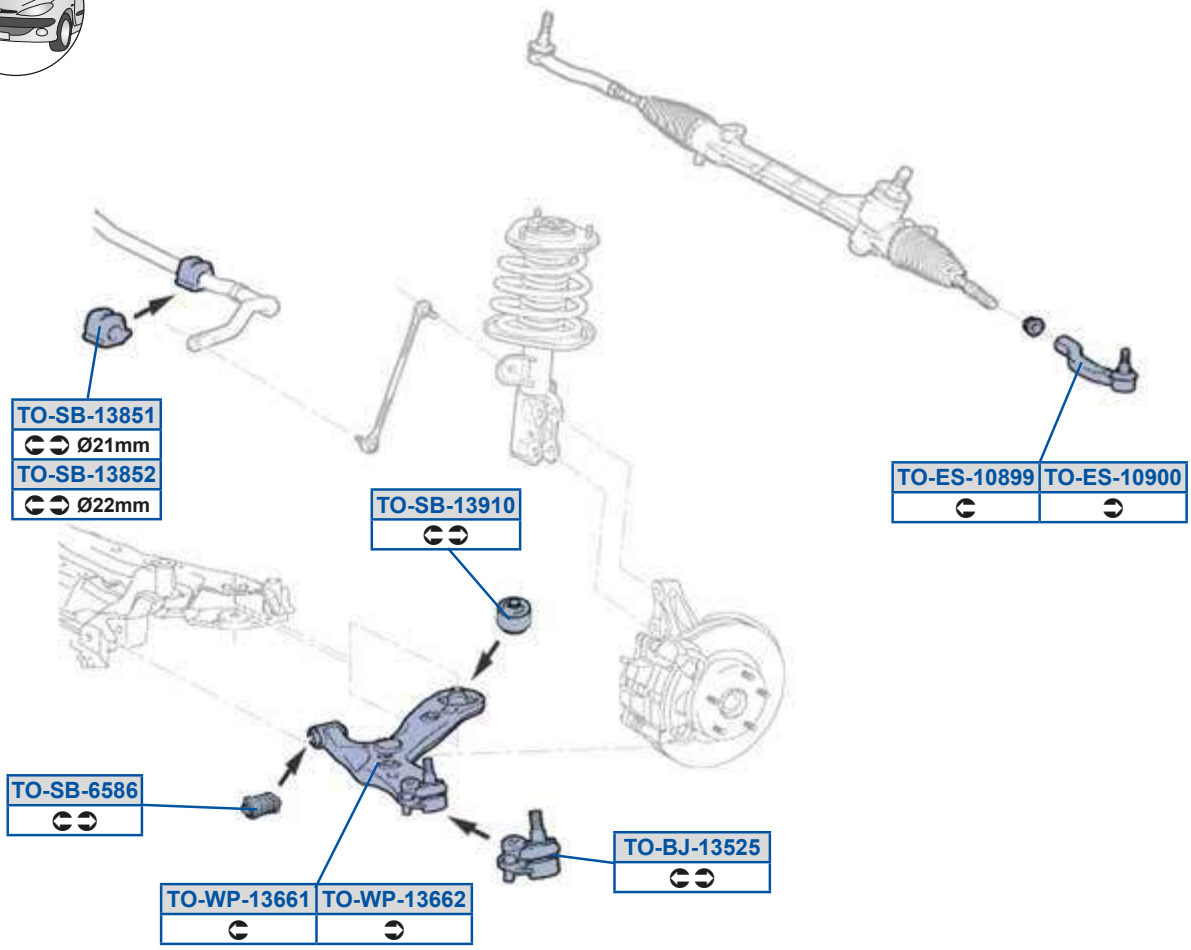
TO-SB-13851
Ø21mm
TO-SB-13852
Ø22mm
TO-SB-13910
TO-ES-10899
TO-ES-10900
TO-SB-6586
TO-BJ-13525
TO-WP-13661
TO-WP-13662

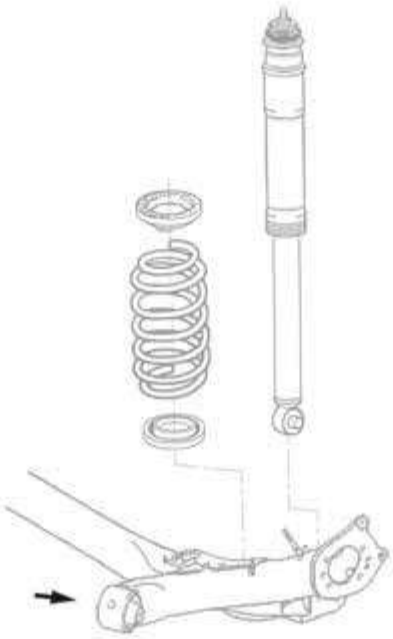

MOOG

e_ 5PX59AC>C
BAAA7BG8FC

e_ 5Sd598FGG
BC7BEBG8DC

e_ 5Sd598G88
BC7BDBG99C

e_ 5dP59AFC9
BFF8C798B73BFF8C7C8A7

e_ 5dP59AFC>
BFF8CEC797

e_ 5dP59AG98
BF7DF89A77 /40

e_ 5dP5DCFD
BF7DFB97C7 /40

e_ 5h a59ADD9
BF7DGBE7C7

e_ 5h a59ADD>
BF7DFBE7C7

acWd aZf d Or h Br 1	8C799	acWd aZf d Ol gh Br 1	8C799

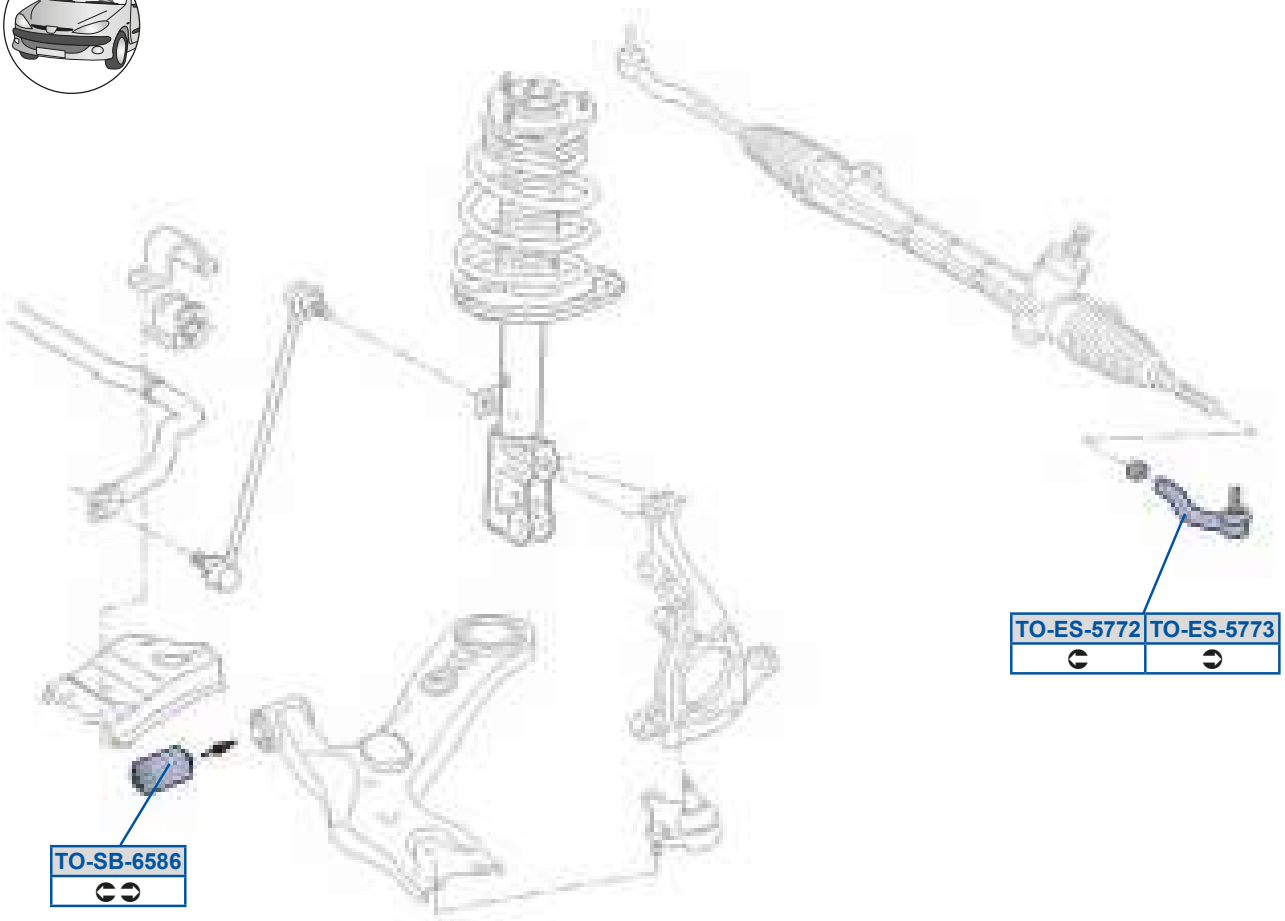

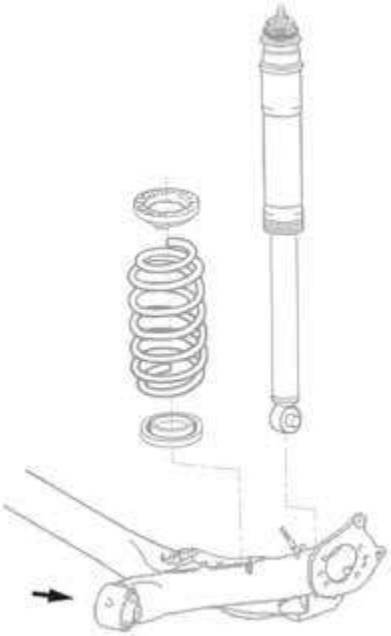

e_ 5Sd5CEE>

BC7BE7G9E73BC7BE8G97C

e_ 5Sd5CEEA

BC7BD7GCE73BC7BD8GB7C

e_ 5dP5DCFD

BF7DFB97C7 /40

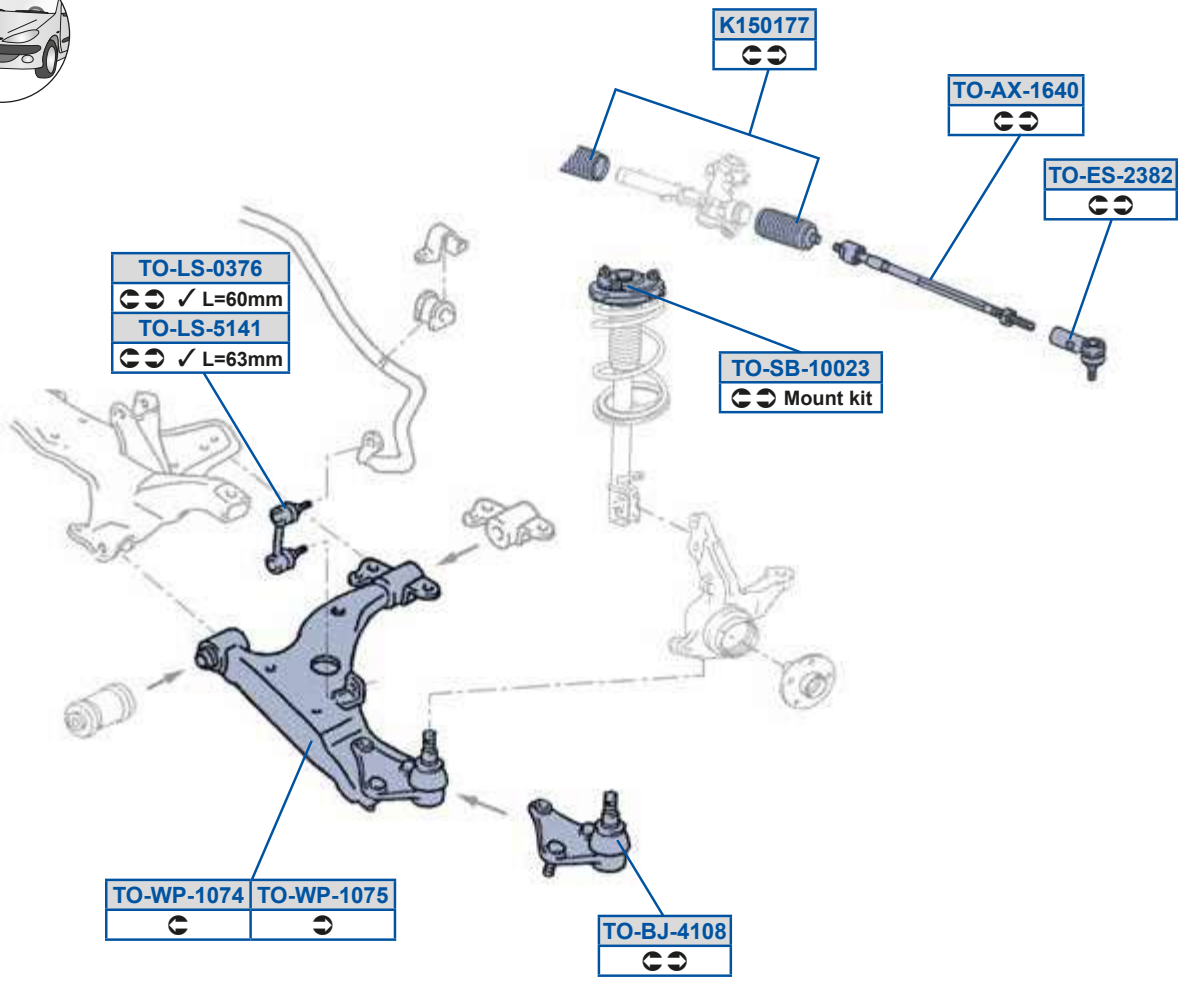
K150177
TO-AX-1640
TO-ES-2382
TO-LS-0376
✓ L=60mm
TO-LS-5141
✓ L=63mm
TO-SB-10023
Mount kit
TO-WP-1074
TO-WP-1075
TO-BJ-4108

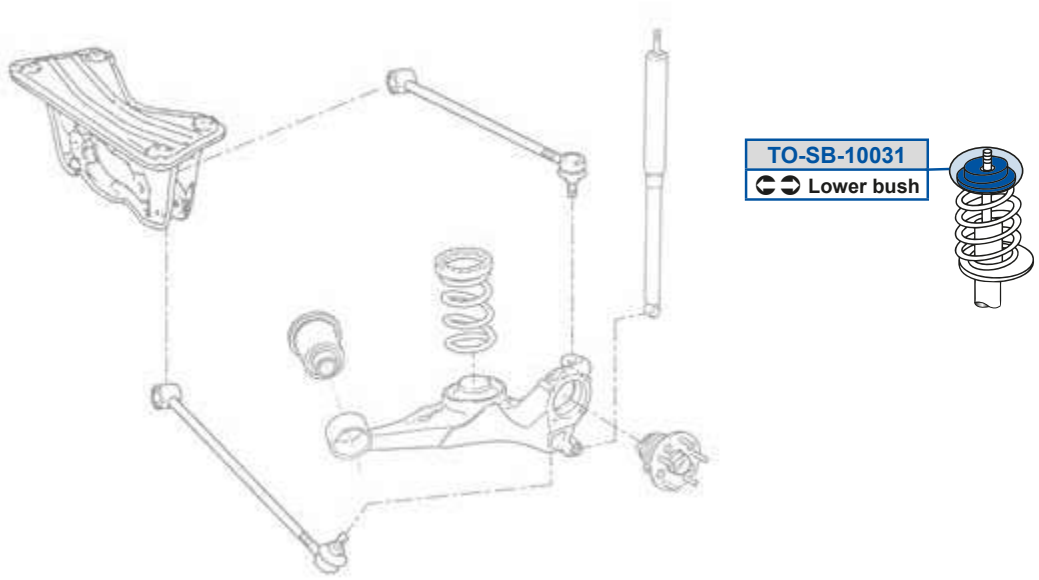
TO-SB-10031
Lower bush

MOOG

Y9C89EE
BCCAC7D7873BCCAC7D797

e_ 5Oi 59DB8
BCC7A8G98C3BCC7A9GADC

e_ 5PX5B98F
BAAA79G99C3BAAA79GA9C

e_ 5Sd5>AF>
BC7BD8G8EC3BC7BD9GA7C

e_ 5Zd58AED
BFF97797873BFF97AA787

e_ 5Zd5C9B9
BFF97B9787

e_ 5dP5988>A
BFD7G4B97873BFD7G4B9788

e_ 5dP5988A9
G7AFC8D7783G7AFC8D77B

e_ 5h a598EB
BF7DGB97893BF7DGB9799

e_ 5h a598EC
BF7DFB97893BF7DFB9799

e_ j _ eO

c Og B WO0r 0; r 1	8D788 9978C	c Og B WOQZ0; r 4i 0; r 4I QO; r 4OQO; r 1	8D788 9978C

c Og B WO0 8D7>888 5L1 lpO>pn

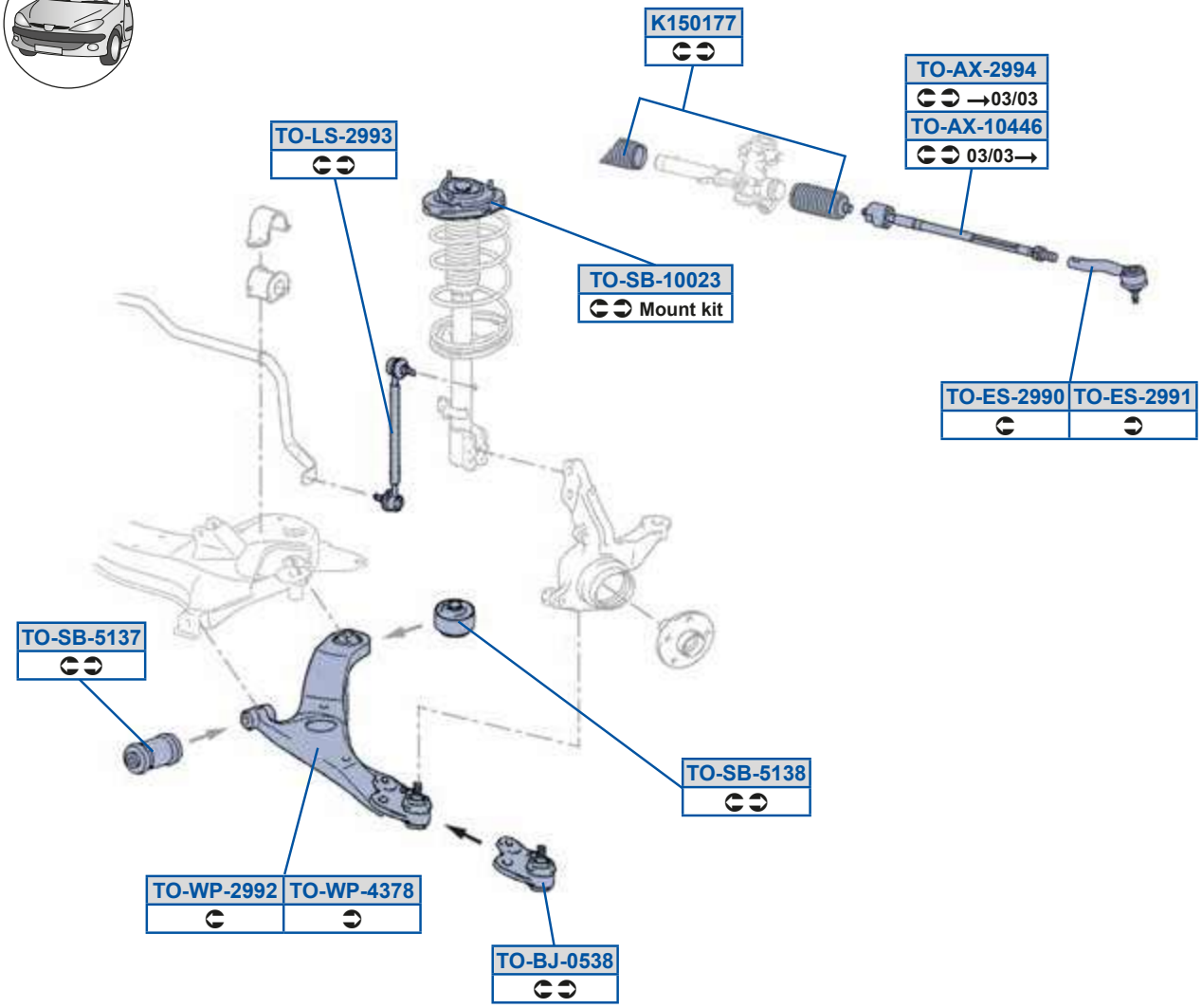

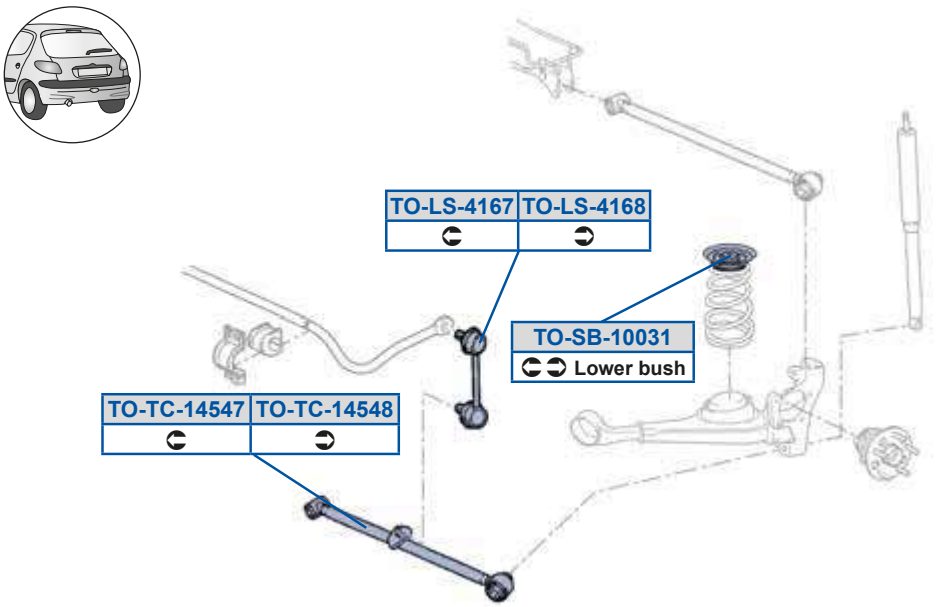

MOOG

Y9C89EE
BCCAC7D7873BCCAC7D797

e_ 5Zd5B9DF
BFFA7B9787

e_ 5h a5BAEF
BF7DFB97B7

e_ 5Oi 598BBD
BCC7AB97973BCC7ABG8DC

e_ 5dP5988>A
BFD7G4B97873BFD7G4B9788

e_ 5Oi 5>GGB
BCC7ABG7CC

e_ 5dP5988A9
G7AFC8D7783G7AFC8D77B

e_ 5PX58CAF
BAAA77G7E73BAAA77G7G7

e_ 5dP5C9AE
BF7DFB97B7 /40

e_ 5Sd5>GG8
BC7BEBG79C

e_ 5dP5C9AF
BF7DFB97B7 /40

e_ 5Sd5>GG9
BC7BDBG7GC

e_ 5eQ59BCBE
BFEA7B9797

e_ 5Zd5>GGA
BFF97B9797

e_ 5eQ59BCBF
BFE97B9797

e_ 5Zd5B9DE
BFFB7B9787

e_ 5h a5>GG>
BF7DGB97B7

e_ j _ eO

c Og B WWOr OAr 1	9978C	c Og B WWOOQOA4OQS4OZOA4UdOA4I dOA1	9978C

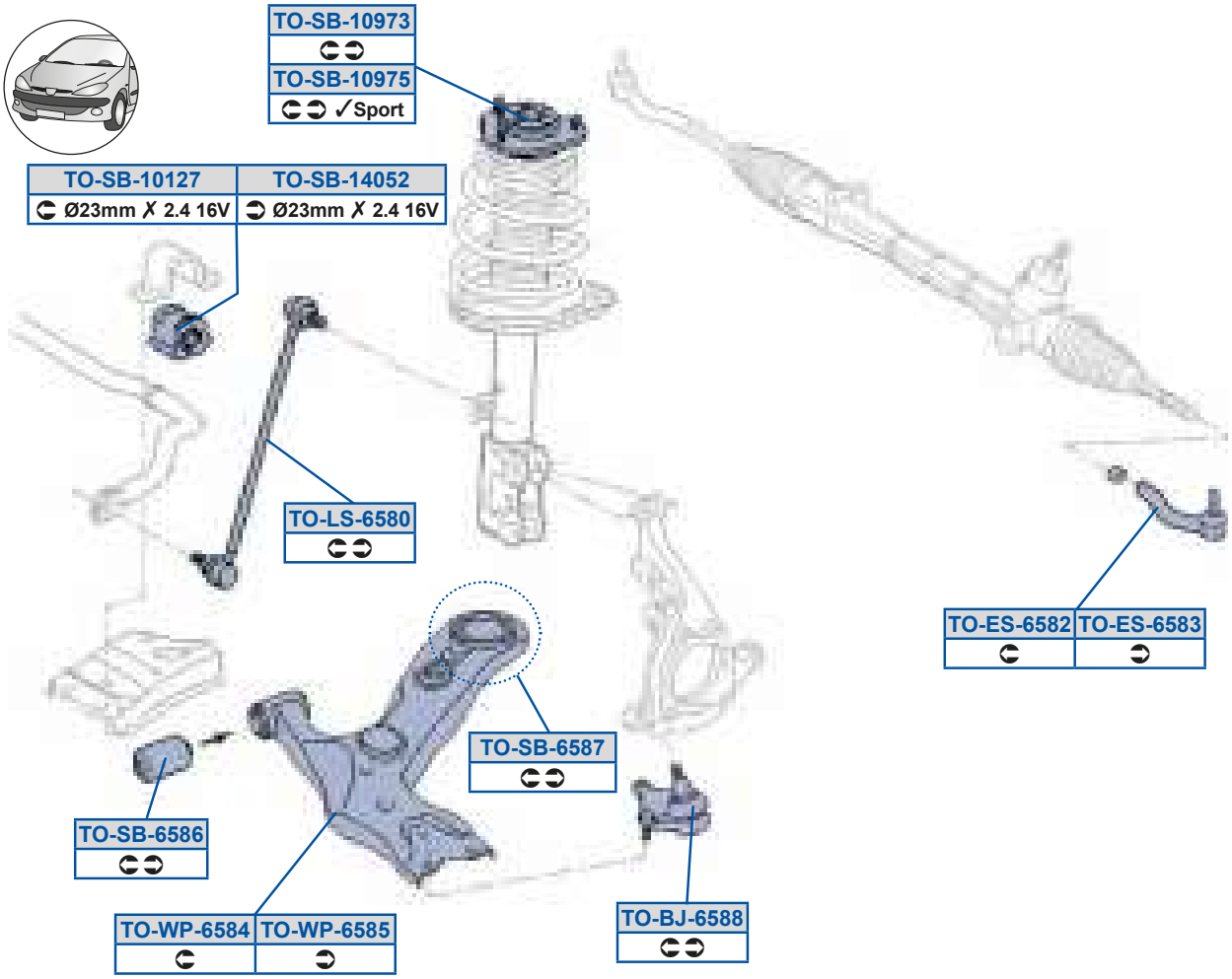

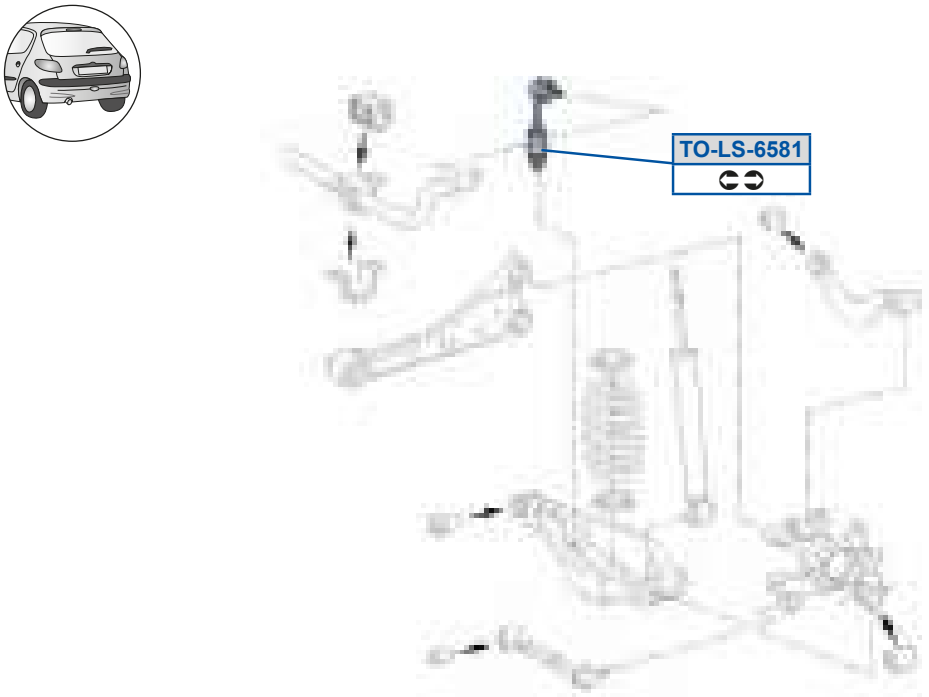

MOOG

e_ 5PX5DCFF
BAAA77GDA73BAAA78G9BC

e_ 5dP5DCFD
BF7DFB97C7 /40

e_ 5Sd5DCF>
BC7BEBG8AC

e_ 5dP5DCFE
BF7DFB97C7 13BF7DGB97C7 1

e_ 5Sd5DCFA
BC7BDBG8GC

e_ 5h a5DCFB
BF7DGB97C73BF7DGB97C8

e_ 5Zd5DCF8
BFF97797E73BFF97B97A7

e_ 5h a5DCFC
BF7DFB97C73BF7DFB97C8

e_ 5Zd5DCF9
BFFA7B97973BFFA7B9798

e_ 5dP5989>E
BFF8CB97G73BFF8CB9887

e_ 5dP598GEA

e_ 5dP59B8C>
BFF8CB98773BFF8CB9898

e_ j _ eO

cOg B Wg 0r OBr 1	9; 79;	cOg B Wg 0l dOBr 4OZOBr 1	9; 79;

c Og B Wg 0 9>7>89> 5L1 lpOBpn

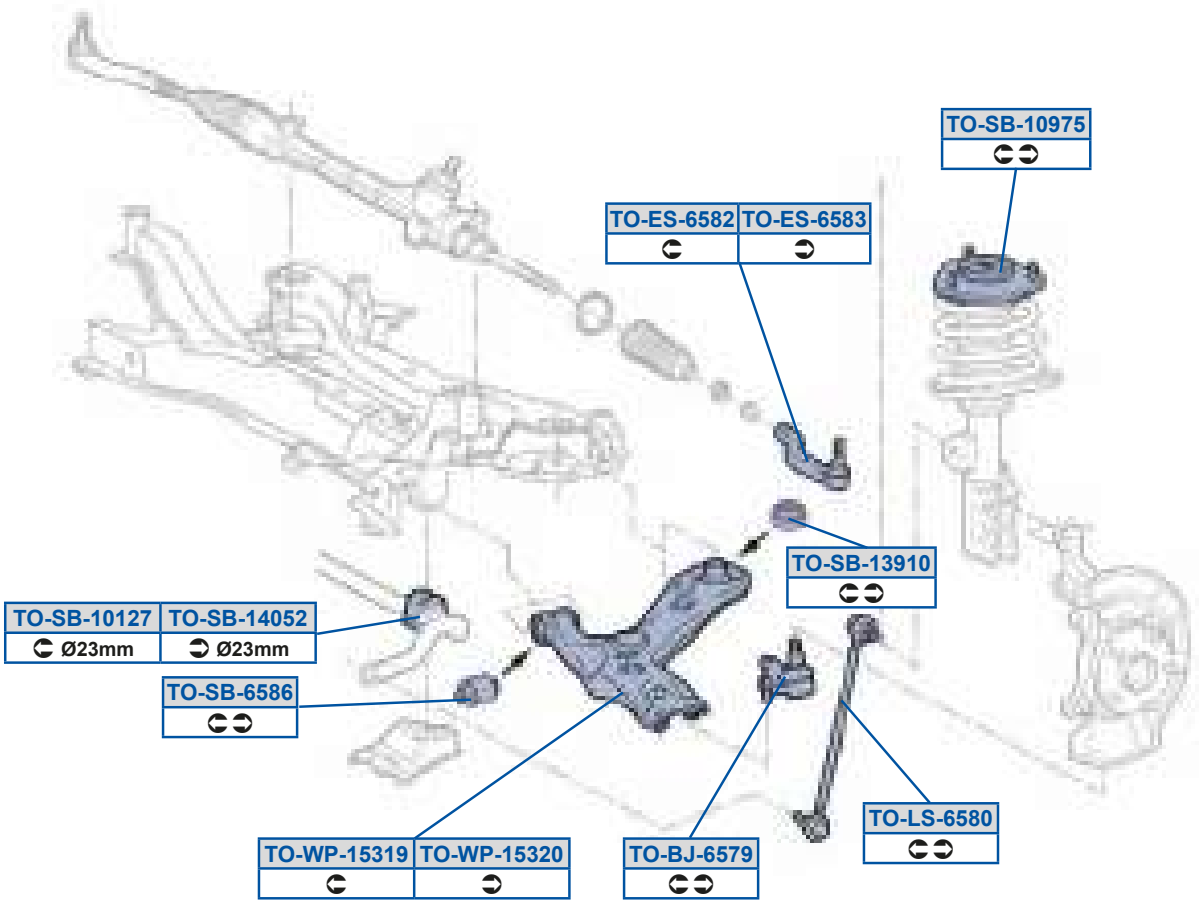

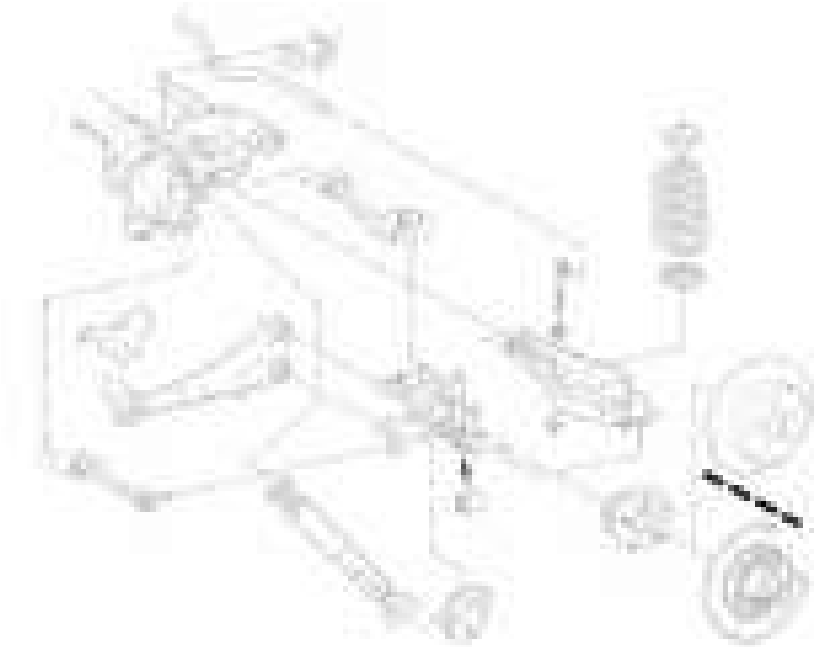

MOOG

e_ 5PX5DCEG
BAAA77GDA73BAAA78G9BC

e_ 5dP5DCFD
BF7DFB97C7 /40

e_ 5Sd5DCF>
BC7BEBG8AC

e_ 5h a59CA9G
BF7DGB97D7

e_ 5Sd5DCFA
BC7BDBG8GC

e_ 5h a59CA>8
BF7DFB97D7

e_ 5Zd5DCF8
BFF97797E73BFF97B97A7

e_ 5dP5989>E
BFF8CB97G73BFF8CB9887

e_ 5dP598GEC
BFD7G47n787

e_ 5dP59AG98
BF7DF89A77 /40

e_ 5dP59B8C>
BFF8CB98773BFF8CB9898

f sr Q zv

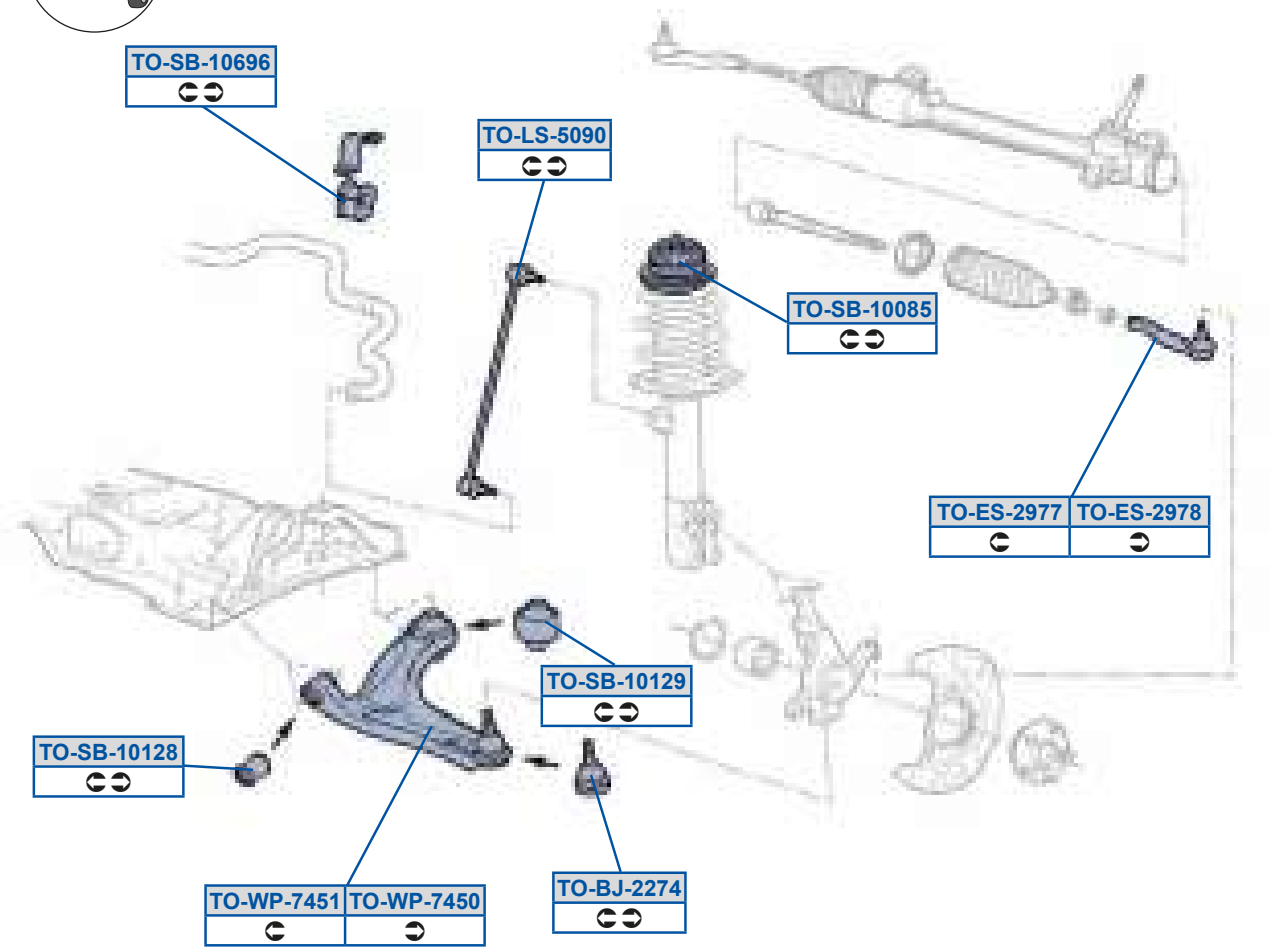

e_i_eO

MOOG

e_ 5PX5>>EB
BAA7FCG7AC3BF7DFCG7AC /40

e_ 5Sd5>GEE
BC7BE7G8C73BC7BE8G88C

e_ 5Sd5>GEF
BC7BD7GAD73BC7BD8G9DC

e_ 5Zd5C8G8
BFF977R7873BFF977R797

e_ 5dP5988FC
BFD8G7R788

e_ 5dP5989>F
BF7DF7G7B7 /40

e_ 5dP5989>G
BF7DF7G7B7 /40

e_ 5dP598DGD
BFF8C47R877

e_ 5h a5EBC8
BF7DF7G7B73BF7DF7G7B8

e_ 5h a5EBC9
BF7DG7G7B73BF7DG7G7B8

e_ j _ eO

kOcWl Or a9r1	8B7GG 8G78C	kOcWl gScd_ Or a; r1	997GG 8G78C

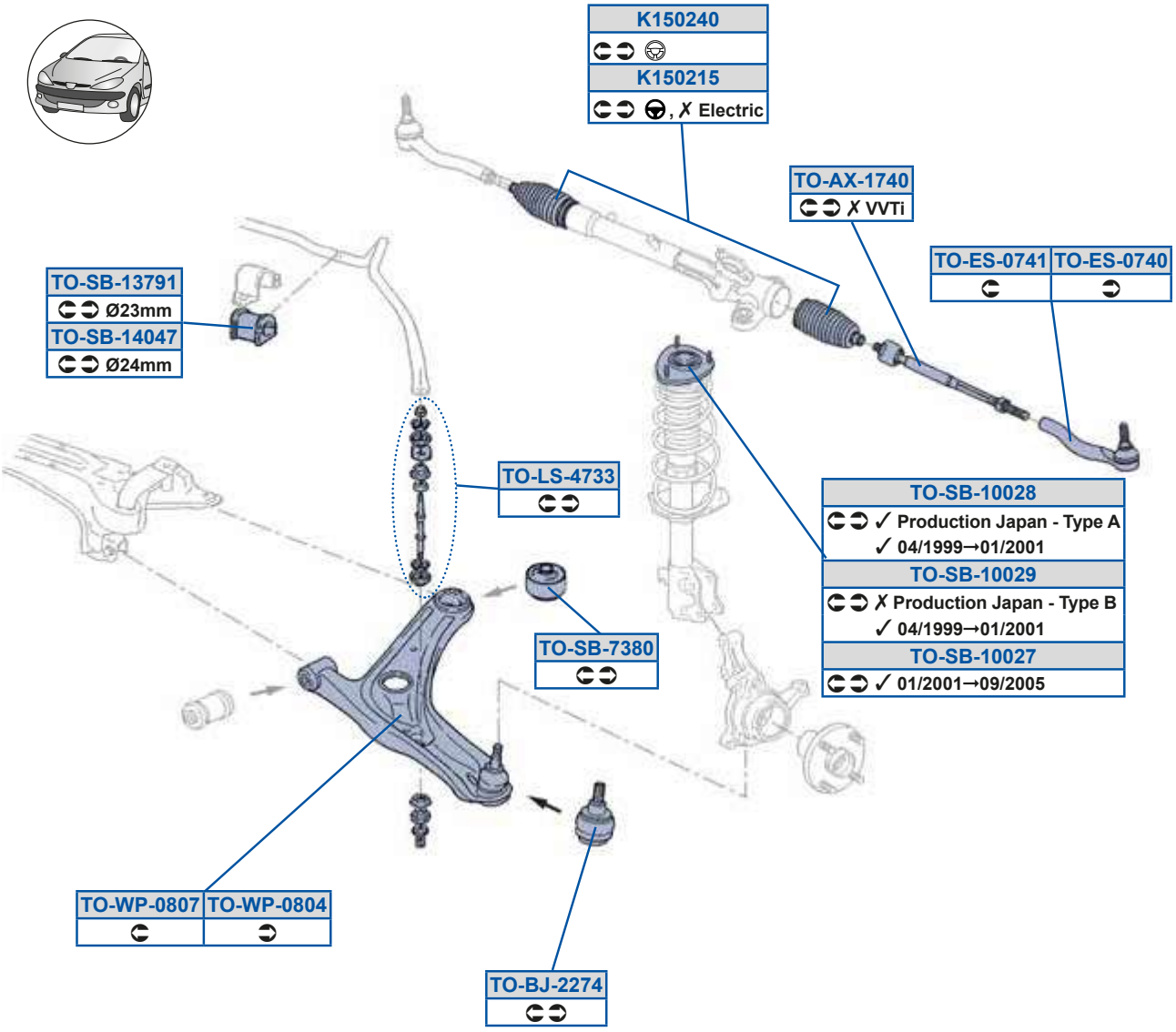

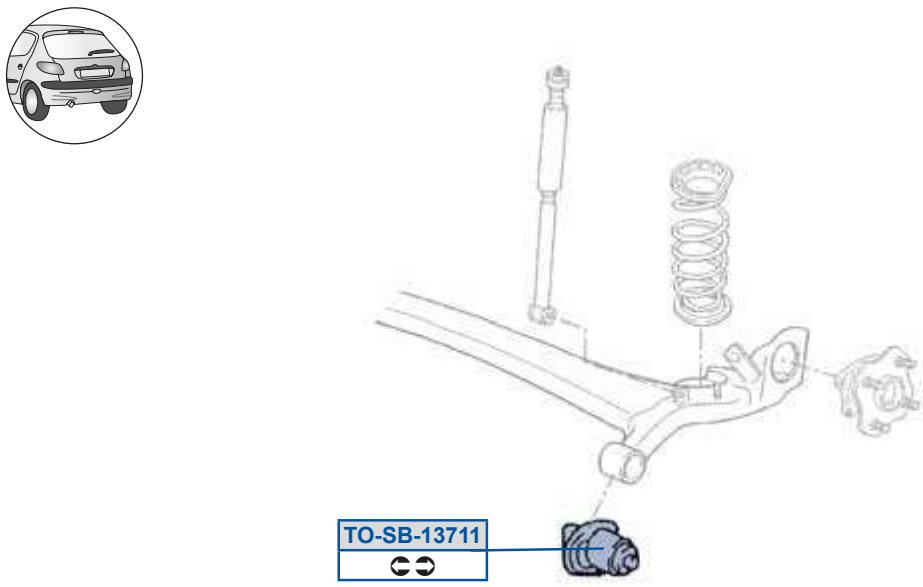

MOOG

Y9C8>9C
BCCACC9787

Y9C8>B8
BCCACC97A7

e_ 5Oi 59EB8
BCC7AC97873BCC7ACG7BC

e_ 5PX5>>EB
BAA7FCG7AC3BF7DFCG7AC /40

e_ 5Sd58EB8
BC7BDCG79C3BC7BDCG79D

e_ 5Sd58EB9
BC7BECG79C3BC7BECG79D

e_ 5Zd5BEAA
BFF8GC9787

e_ 5dP5988>E

e_ 5dP5988>F

e_ 5dP5988>G

e_ 5dP59AE99
BFE9CC9798

e_ 5dP59AEG9
BFF8CC9787

e_ 5dP59B8BE
BFF8CC9797

e_ 5dP5EAF8
BF7DFCG7AC /40

e_ 5h a58F8B
BF7DCCG7AC3BF7DF7G7A7

e_ 5h a58F8E
BF7DCCG7AC3BF7DG7G7A7

e_ j _ eO

kOcWl 0r daGr 1	9978C		

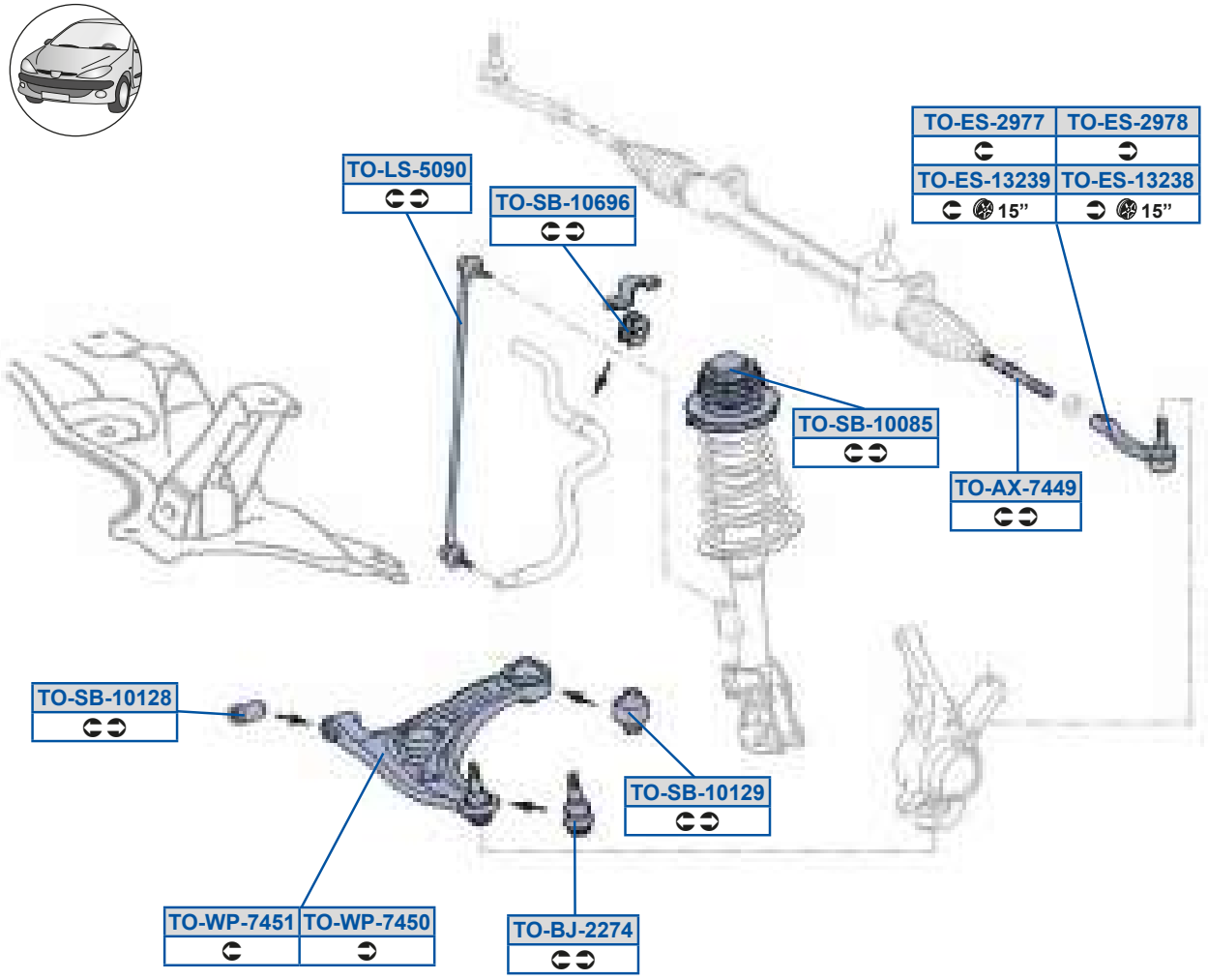

e_ 5Oi 5EBBG
BCC7A7R7F73BCC7AC97E7

e_ 5dP5989>F
BF7DF7G7B7 /40

e_ 5PX5>>EB
BAA7FCG7AC3BF7DFCG7AC /40

e_ 5dP5989>G
BF7DF7G7B7 /40

e_ 5Sd59A>AF
BC7BDCG8GC3BC7BDCG9CC

e_ 5dP598DGD
BFF8C47R877

e_ 5Sd59A>AG
BC7BECG8AC3BC7BECG8DC

e_ 5h a5EBC8
BF7DF7G7B73BF7DF7G7B8

e_ 5Sd5>GEE
BC7BE7G8C73BC7BE8G88C

e_ 5h a5EBC9
BF7DG7G7B73BF7DG7G7B8

e_ 5Sd5>GEF
BC7BD7GAD73BC7BD8G9DC

e_ 5Zd5C8G8
BFF977R7873BFF977R797

e_ 5dP5988FC
BFD8G7R788

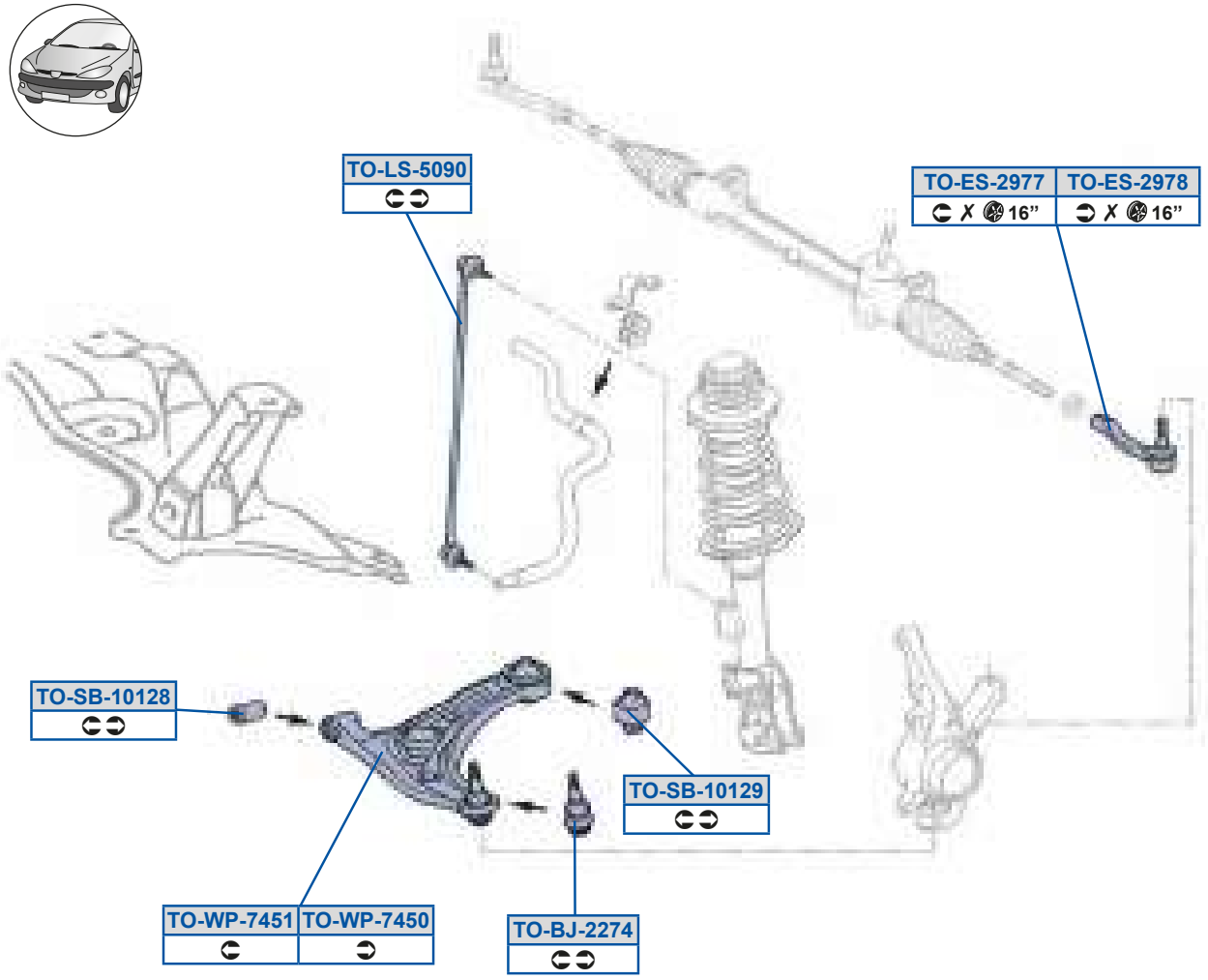
TO-LS-5090
TO-ES-2977
TO-ES-2978
16”
16”
TO-SB-10128
TO-SB-10129
TO-WP-7451
TO-WP-7450
TO-BJ-2274

e_ 5PX5>>EB
BAA7FCG7AC3BF7DFCG7AC /40

e_ 5Sd5>GEE
BC7BE7G8C73BC7BE8G88C

e_ 5Sd5>GEF
BC7BD7GAD73BC7BD8G9DC

e_ 5Zd5C8G8
BFF977R7873BFF977R797

e_ 5dP5989>F
BF7DF7G7B7 /40

e_ 5dP5989>G
BF7DF7G7B7 /40

e_ 5h a5EBC8
BF7DF7G7B73BF7DF7G7B8

e_ 5h a5EBC9
BF7DG7G7B73BF7DG7G7B8

ORO[Q[9A1	9879;		

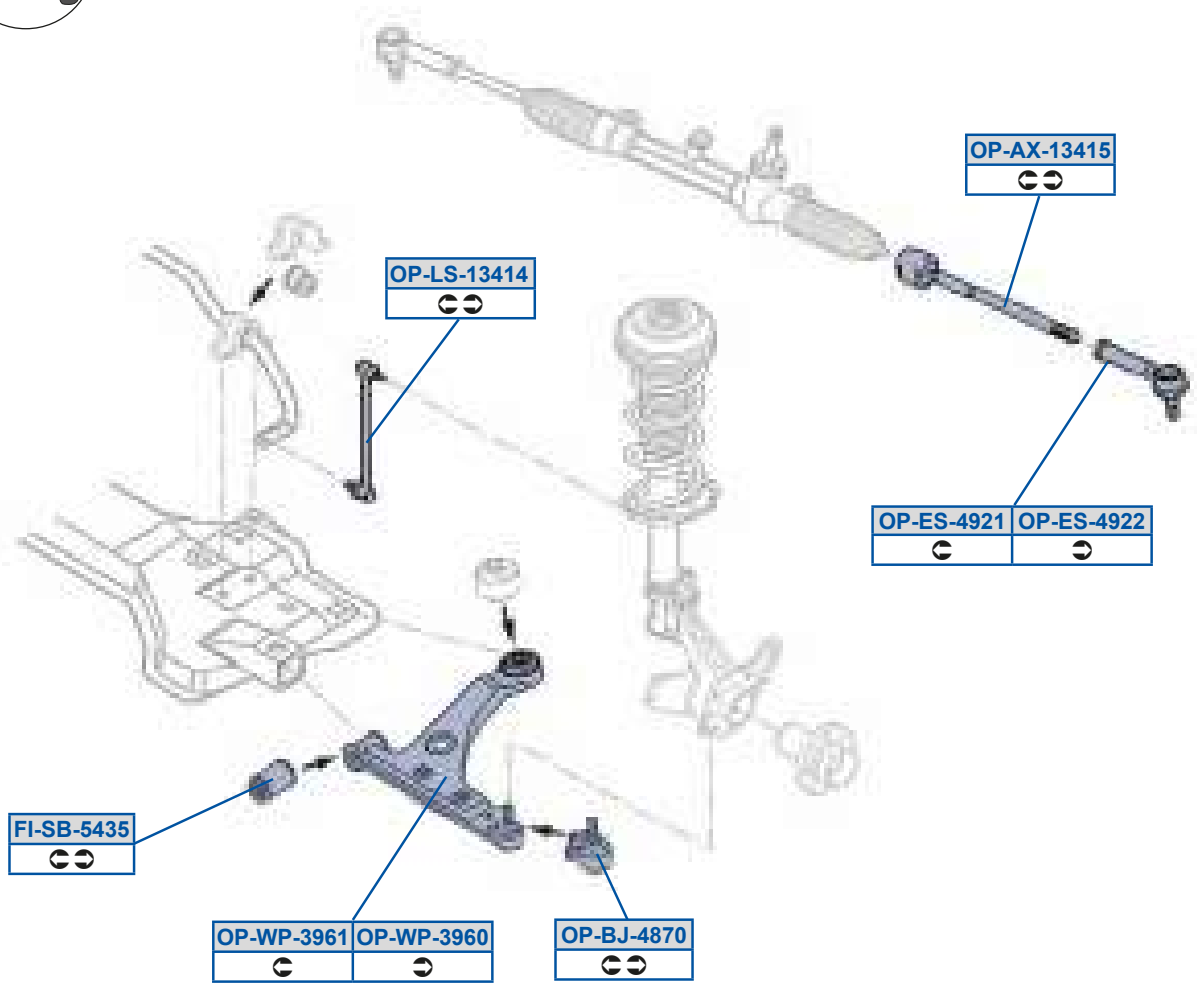

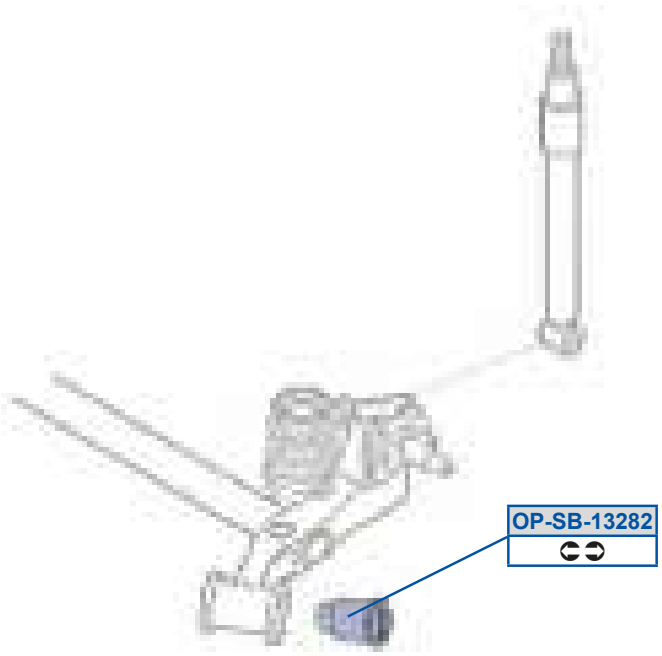

TW6dP5CBAC
8A9D7DDD3CCE7A9A9

_a5Oi59AB9C
8D7G9883GCC8BG8B

_a5PX5BFE8
AC97DE3AC97FE

_a5Sd5BG>9
GA8FG79A3GA8GDCB8

_a5Sd5BG>>
GA8FG79B3GA8GDCB9

_a5Zd59AB9B
8AAG8C89

_a5dP59A>F>
8A9C8CG73B79CAF

_a5ha5AGD8
8AB9DCCA3CCE7A9A8

_a5ha5AGD9
8AB9DCC93CCE7A9A7

OUVZO [W0010V881	8; 788 8A78F		

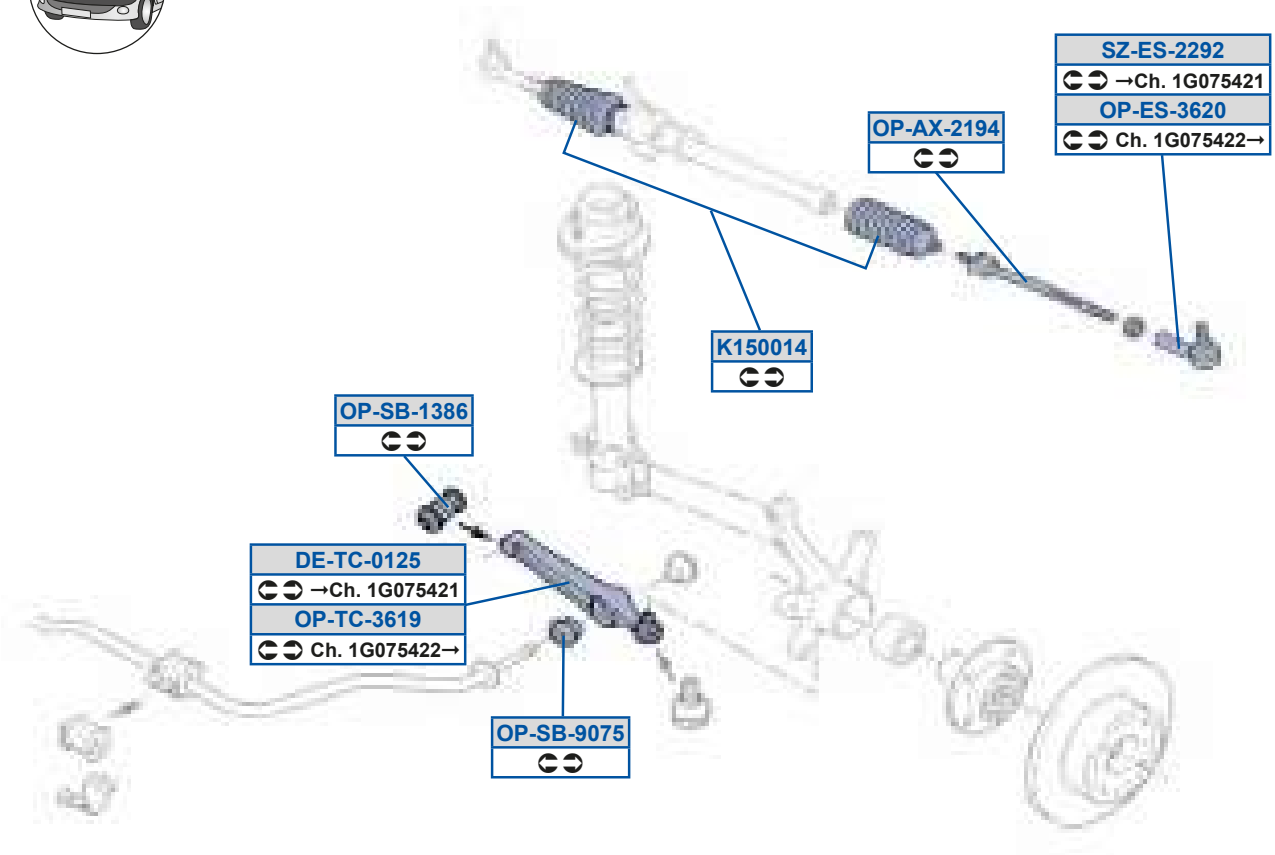

RS5eQ589>C
G97FGFE3G98E9CG

Y9C889B
7G79F9D39D78779G

_ a5Oi 5>9GB
G97BEC9

_ a5Sd5AD>8
G987AC8

_ a5dP59AFD
BE7C8E93GDAF7CFD

_ a5dP5G8EC
B9BC8a EDU77

_ a5eQ5AD9G
BE7CEB93BE7DDDC

dk5Sd5>>G>
7G97BEC837G9878DF

OUVZO [WOP10V8F1	8978F 9979B		

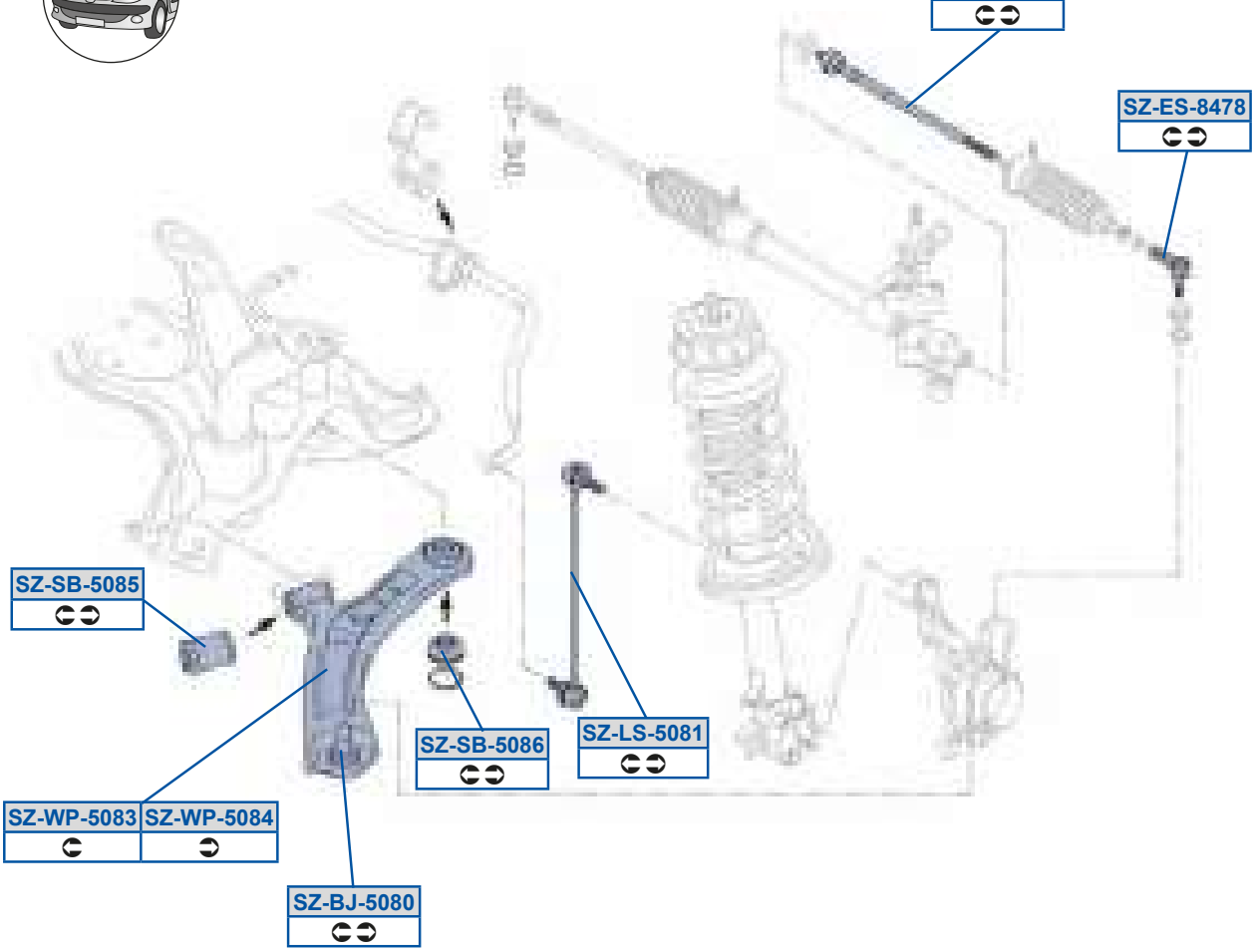

MOOG

dk5Oi 5C8F>
BFFA7DAX773GA8GB779

dk5PX5C8F8
BC979D9X77 /40

dk5Sd5FBEF
BE7G8GC3GA8GB7AC

dk5Zd5C8F9
B9B97D9X773GA8GC7GA

dk5dP5C8FC
BCCA7D9X773GA8GA8AB

dk5dP5C8FD
BC979D9X77 /40

dk5h a5C8FA
BC979D9X77

dk5h a5C8FB
BC978D9X77

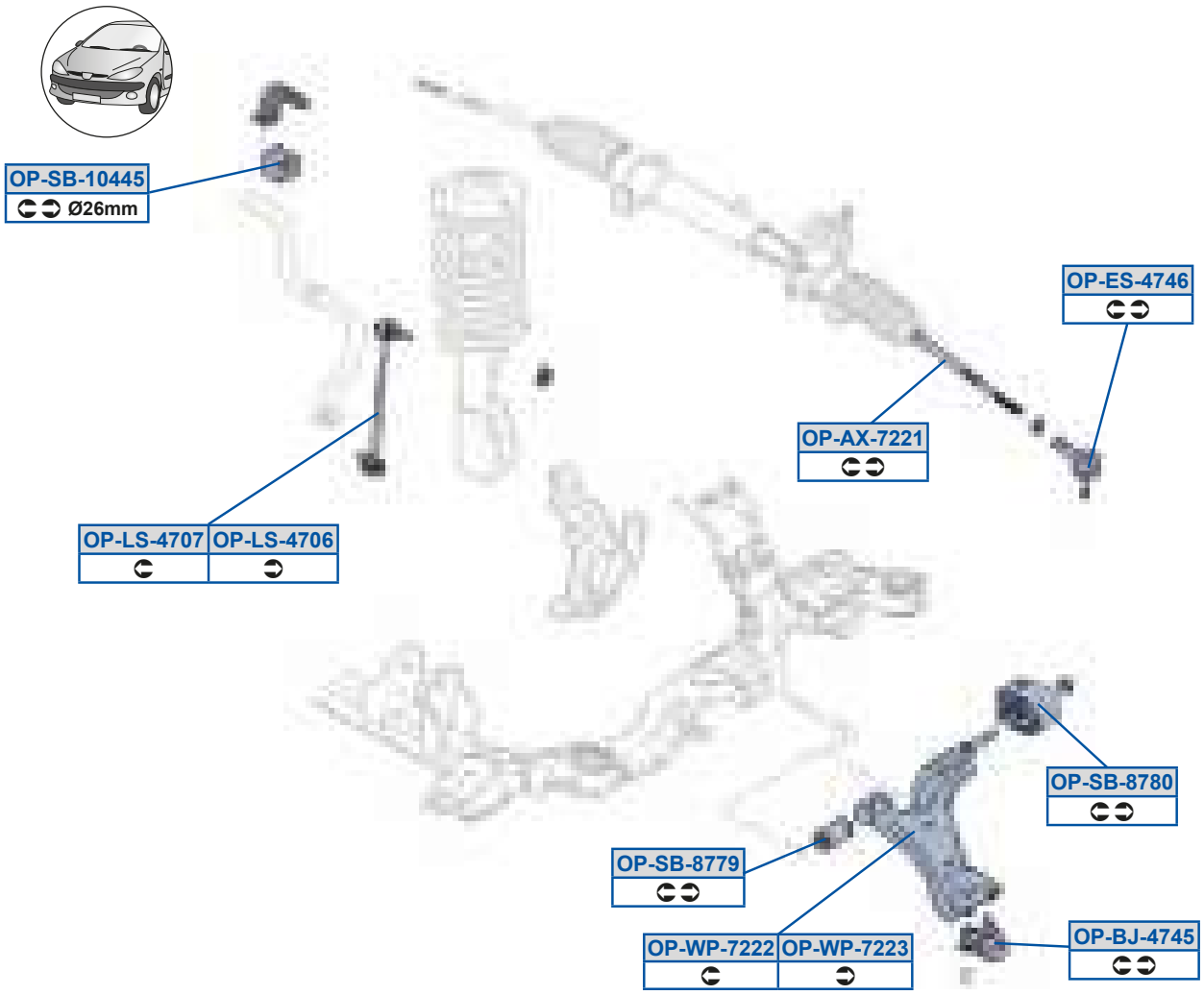
OP-SB-10445
Ø26mm
OP-ES-4746
OP-AX-7221
OP-LS-4707
OP-LS-4706
OP-SB-8780
OP-SB-8779
OP-WP-7222
OP-WP-7223
OP-BJ-4745

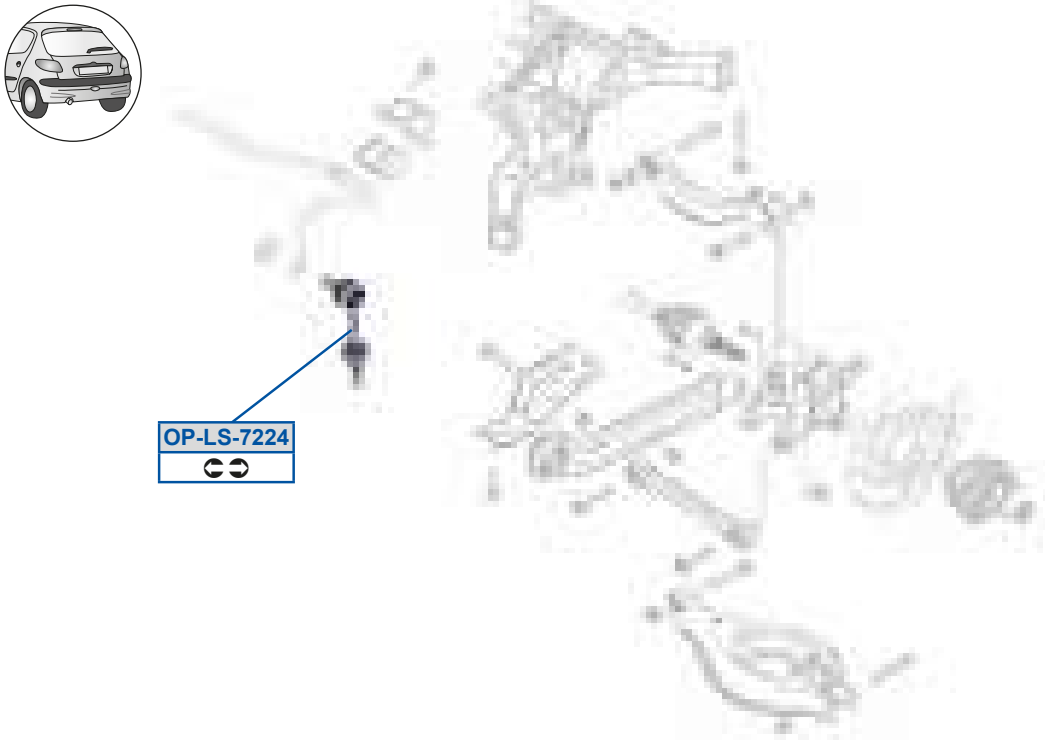
OP-LS-7224

_ a5Oi 5E>>9
GCGCBECB /40

_ a5dP5FEF8
9CGGC89E3GDF7GDED

_ a5PX5BEBC
8C9GAG9B3BF7DA77 /40

_ a5h a5E>>>
9CGGC89F3GDD9D9AC

_ a5Sd5BEBD
BF7AB9G3GDD9DDDE

_ a5h a5E>>A
9CGGC89G3GDD9D9AD

_ a5Zd5BE8D
99EBB88G3BF7DA7C

_ a5Zd5BE8E
BF7DA7B3GDD9D9BE

_ a5Zd5E>>B
BF7BDB93GDD9D8C7

_ a5dP598BBC
GDF87EC8

_ a5dP5FEEG
GDF8G8D8 /403GDF8G8D9 /40

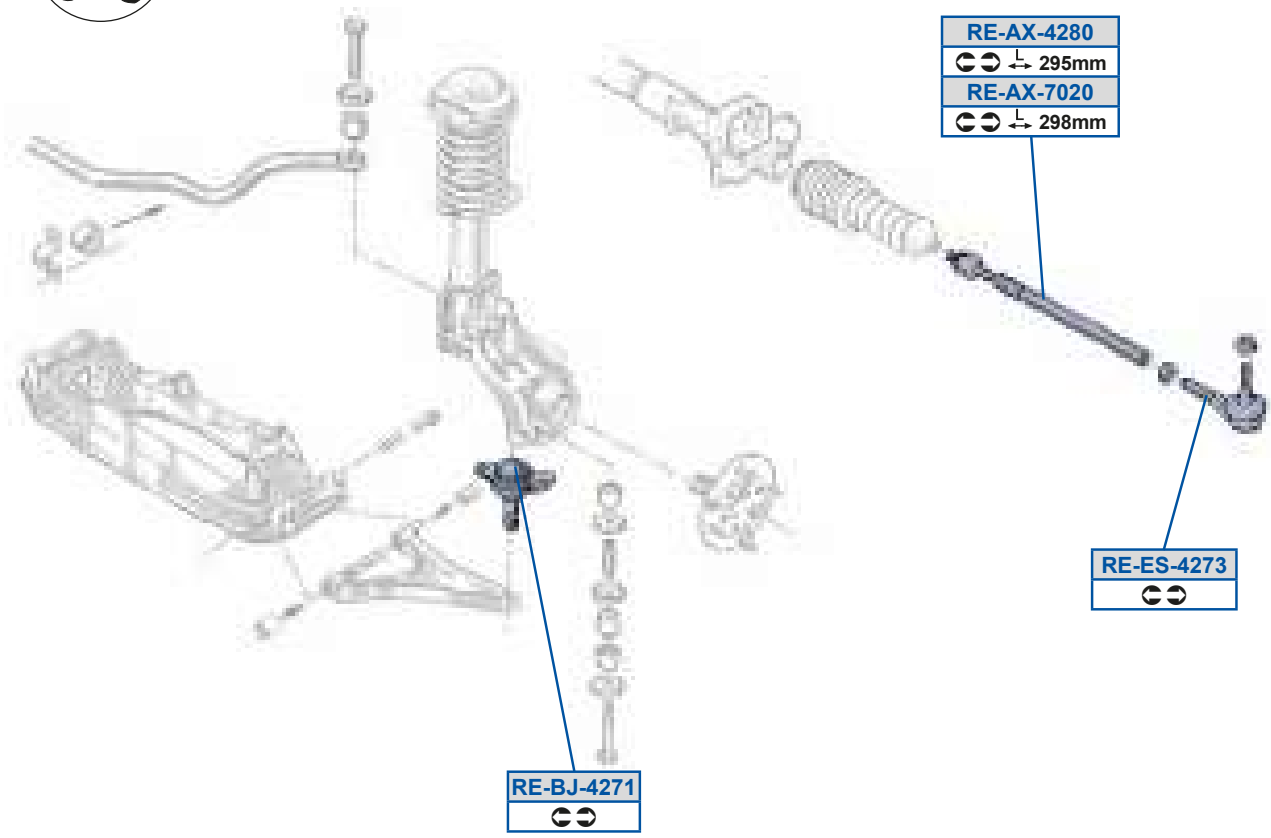
RE-AX-4280
295mm
RE-AX-7020
298mm
RE-ES-4273
RE-BJ-4271

c S5Oi 5B>F8

EE78BDBA8A

c S5Oi 5E8>8

BB7AF7D

c S5PX5B>E9

G888DB8

c S5Sd5B>EA

G888DD8

gOf i VOZZ

Odec O [WWOT1Q x áu x ŒG; 1	8A7GA 8A789	Odec O [WWOT1S t x ŒG; 1	8A7G9 9; 7GF
Odec O [WWOT1Vt vÉut v ŒG; 1	8G7G9 8; 7GF	Odec O [WWOT1dt	8G7G9 8G7GF
Odec OgO] [WWOT1ŒG; 1	897G9 8F7GF		

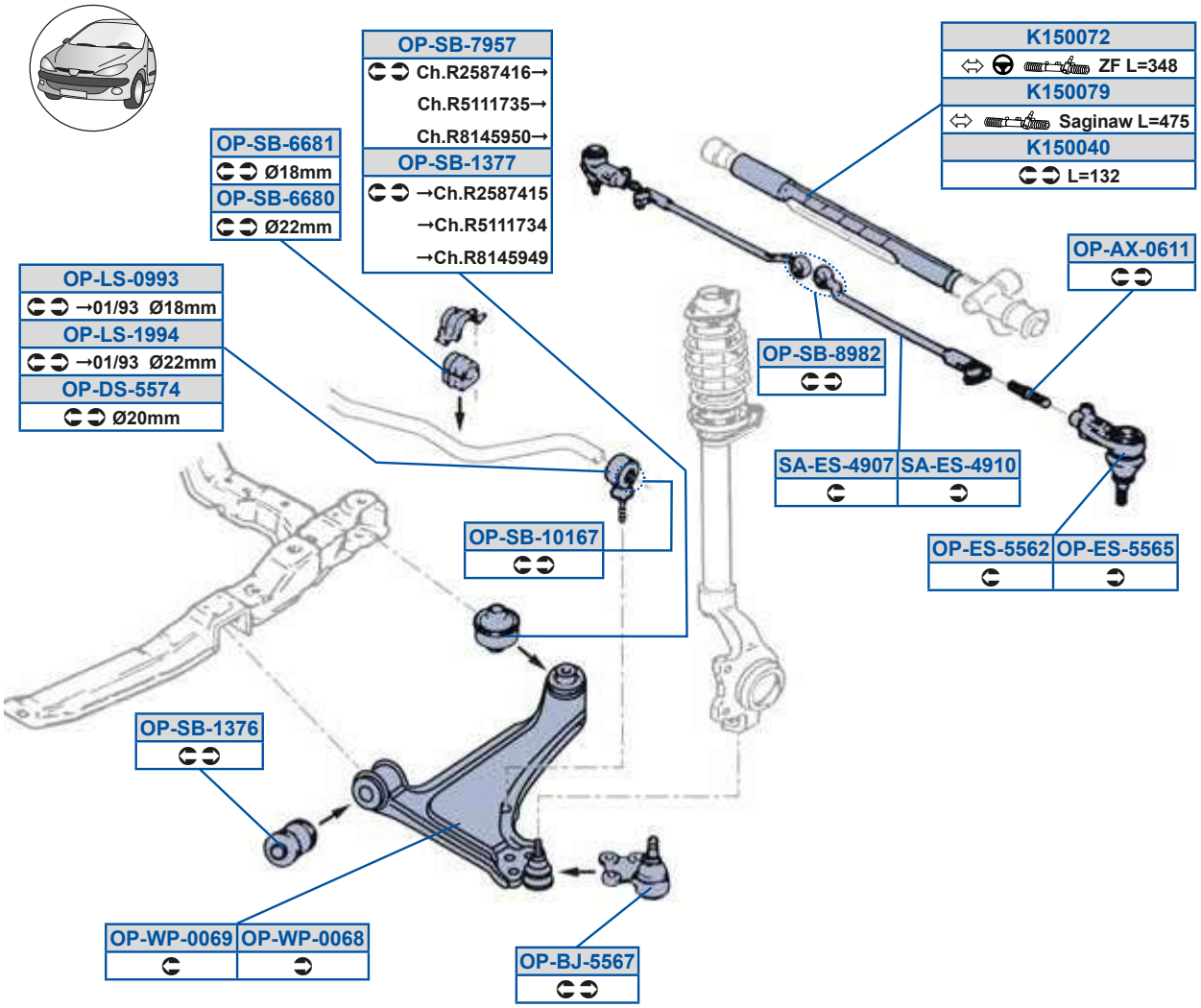

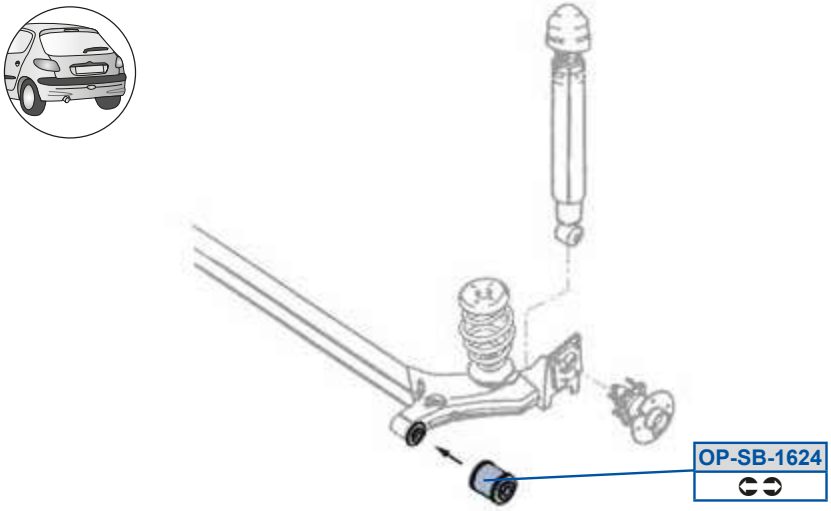

MOOG

Y9C88B8
8D7G7BC38D7G7EA

_ a5Zd58GGA
G79EFCEE

_ a5dP5EB9D
G79C7E7G

Y9C88E>
8D7G7ED3G7BB9888

_ a5Zd59GGB
AC79D73G79EFCEG

_ a5dP5EGCE
G7AEA9DB3G7BGC7BD

Y9C88EG
G79F9G

_ a5dP5989DE
AC78CA

_ a5dP5FGF>
A998BE /403B9B9DEA /40

_ a5Oi 58D99
A99CED3A99CEE

_ a5dP59AED
AC9A773G79FF9A9

_ a5h a588DF
AC98G93G7BEA99E

_ a5PX5CCDE
8D7A8DE3G78B8AGA

_ a5dP59AEE
AC9ABF3G79DFBDA

_ a5h a588DG
AC98GA3G7AEAEEG

_ a5Rd5CCEB
G7BGC7BC

_ a5dP59D>B
G7A7CBA8

dO5Sd5BG8E
G7A7BD9C

_ a5Sd5CCD>
G7AC7BBE3G7ADGE7B

_ a5dP5DDF8
AC77EF3AC789A

dO5Sd5BG98
G7A7BD9D

_ a5Sd5CCDC
G7AC7BBF3G7ADGE7C

_ a5dP5DDF9
AC77F83AC7899

Odec O [Wy OU1 Q x áu x ŒGF1	8A789 9878C	Odec O [Wy OU1 Q x ŒGF1	8A788 8F78C
Odec O [Wy OU1 S t x ŒGF1	8; 7GF 8C78C	Odec O [Wy OU1 Vt vÉut v ŒGF1	8; 7GF 8C78C
Odec O [Wy OU1 dt ŒGF1	8; 7GF 8C78C	Odec Og O] [Wy OU1 ŒGF1	8F7GF 8F78D

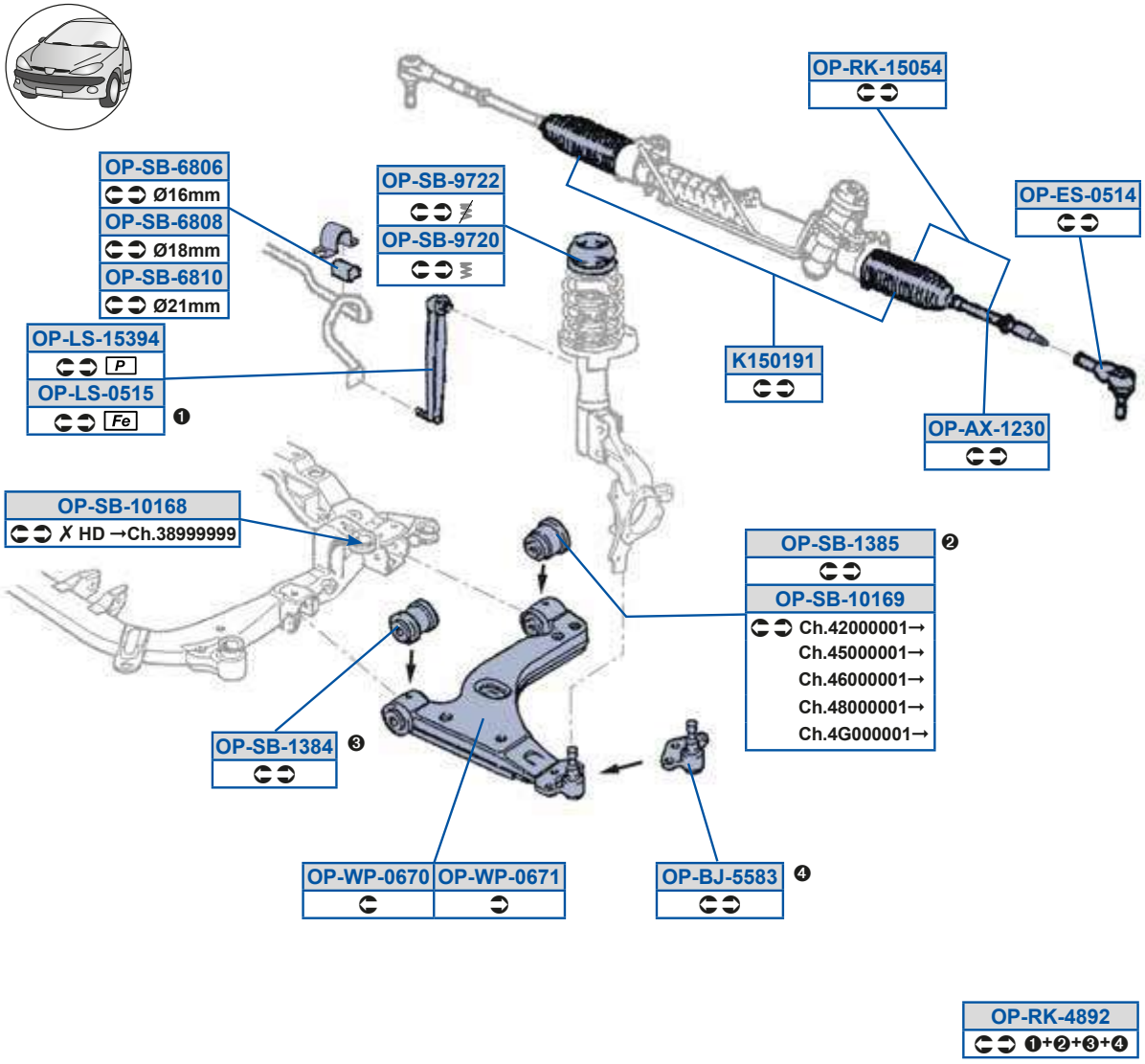

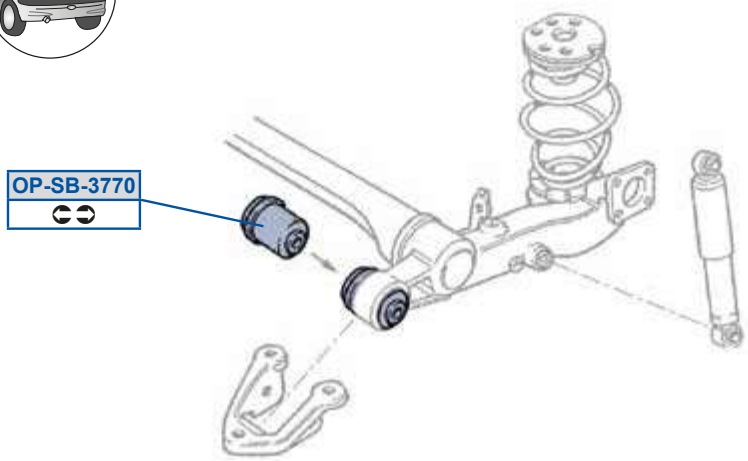

Y9C89G9
8D7G87G39D7CG9GC

_ a5dP5989DF
A799EC3A799G7

_ a5dP5GE>8
7ABBC9C

_ a5Oi 59>A8
9D7CG9GA3G88F89F

_ a5dP5989DG
8A87EA9F

_ a5dP5GE>>
ABBC9A3G7BDFCCB

_ a5PX5CCFA
G7BFECD83G7C89GF9

_ a5dP59AFB
AC9ACE3AC9ADB

_ a5h a58DE8
CAC978D3G7BGFAEC

_ a5Sd58C9B
8D7A98B38D7A98C

_ a5dP59AFC
AC9ADC3G7BGFEB7

_ a5h a58DE9
CAC978E3G7BGFAED

_ a5Zd58C9C
8A8DGBAG3AC7D88

_ a5dP5AEE8
7B79DBB3B79DBB

_ a5Zd59CAGB
AC78ED3AC7D88

_ a5dP5DF8D
AC78A73G7BDFCDE

_ a5cY59C8CB
9D7CG9GA3G88F89F

_ a5dP5DF8F
G7CAFFDC

_ a5cY5BFG>

_ a5dP5DF98
8A89CBG9

gOf i VOZZ

Odec0 [g 0/1S t x 008B1	8F78B 98798	Odec0 [g 0/1Vt vÉut v 008B1	8978B 8G78G
Odec0 [g 0/1d Vt vÉ 008B1	8; 78C 99798	Odec0 [g 0/1e é e 008B1	8G78C 99798
Odec0g0] [g 0/1008B1	8A78C		

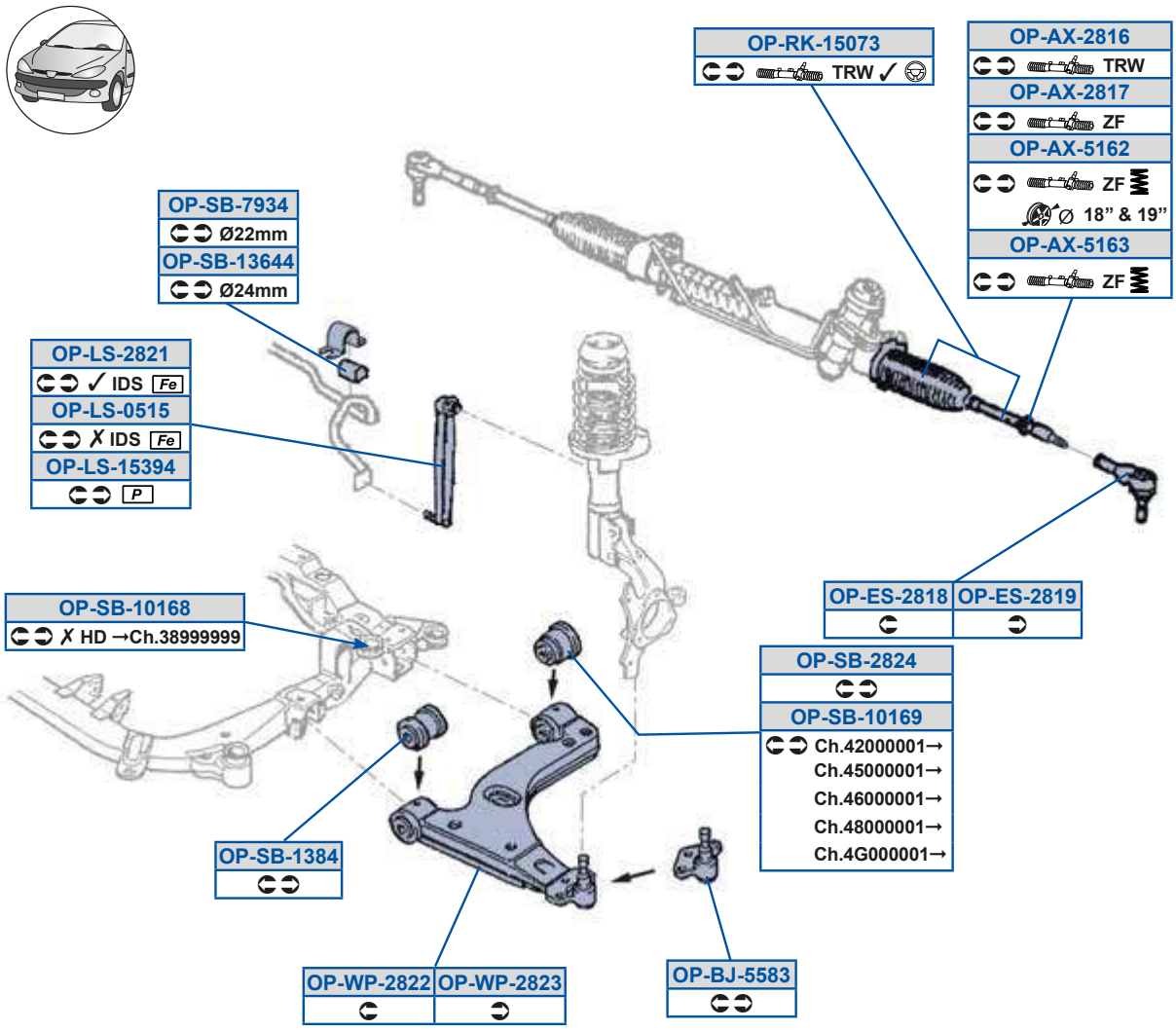

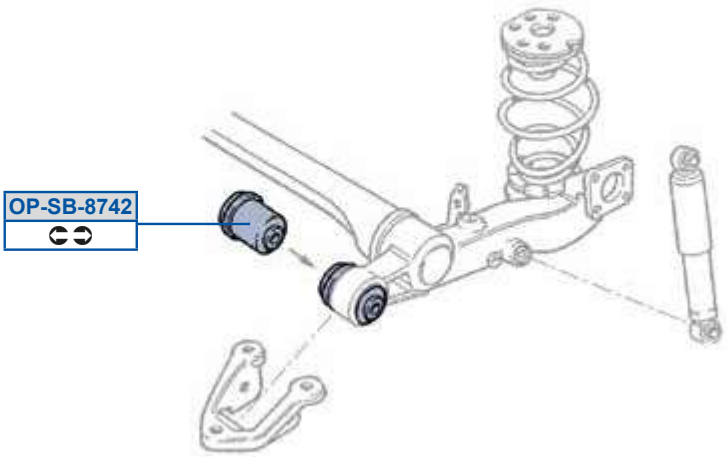

_ a5Oi 5>F9D
GA8EGCCE3GA8FGBC7

_ a5Zd59CAGB
AC78ED3AC7D88

_ a5dP5EGAB
AC788E

_ a5Oi 5>F9E
GA8F899G3GA8FGDDF

_ a5Zd5>F>9
9BBD8ACA

_ a5dP5FEB>
8A887B8F38A9DE98C

_ a5Oi 5C9D>
GA8F8DD93GA8FGDE7

_ a5cY59C8EA
GA8EGCCE3GA8FGBC7

_ a5h a5>F>>
9BBCBBEE

_ a5Oi 5C9DA
GA8F89A73GA8FGDDG

_ a5dP5989DF
A799EC3A799G7

_ a5h a5>F>A
9BBCBBEF

_ a5PX5CCFA
G7BFECD83G7C89GF9

_ a5dP5989DG
8A87EA9F

_ a5Sd5>F9F
GA8EGCCG3GA8F89A9

_ a5dP59ADBB
8A97B7E8

_ a5Sd5>F9G
GA8EGCCF3GA8F89AA

_ a5dP59AFB
AC9ACE3AC9ADB

_ a5Zd58C9C
8A8DGBAG3AC7D88

_ a5dP5>F>B
9BBAGCF9

gOf i VOZZ

Odec O [gWOX1 0a981	9; 78G	Odec O [gWOX1 S t x 0a981	98798
Odec O [gWOX1 UeQ 0a981	98799	Odec O [gWOX1 dt 0a981	8D79;
Odec O [gWOX1 d e x	98798		

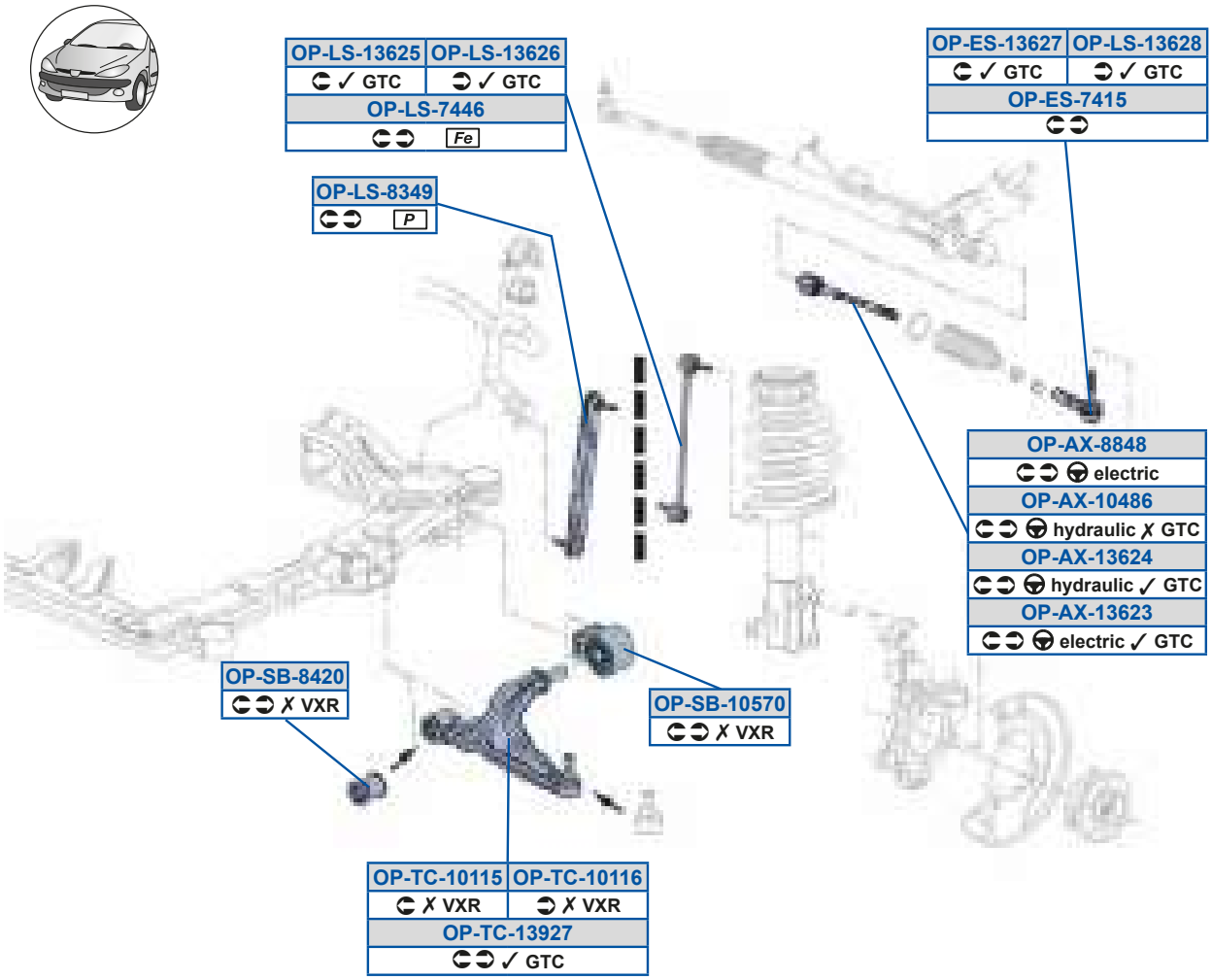

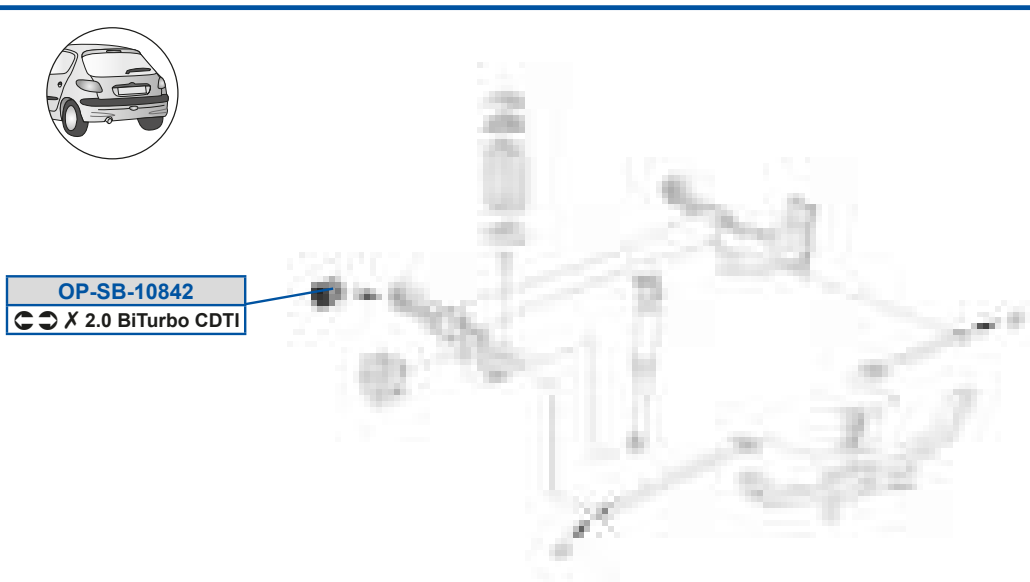

gOf i VOZZ

MOOG

_ a5Oi 598BFD
8A9EFACF3G9777E

_ a5Zd59AD>D
8A9FCD9F

_ a5eQ59AG>E
8AAE8F8F38AAE8F8G

_ a5Oi 59AD>A
8AACBCB938D7G8FE

_ a5Zd5EBBD
8A9CF7C93AC7D8F

_ a5Oi 59AD>B
8AAAEFG8

_ a5Zd5FABG
8A98G8B8

_ a5Oi 5FFBF
8A9FDDFE38D7G79E

_ a5dP598CE8
8AAAB798397FACGAF

_ a5Sd59AD>E
8AAAEFF738AACBCAF

_ a5dP598FB>
8AA88G973B7979E

_ a5Sd59AD>F
8AAAEFF938AACBCB7

_ a5dP5FB>8
8A98G7G73AC9FDD

_ a5Sd5EB9C
8A9E977738A9EFACG

_ a5eQ59899C
8AA98AAF38AAAB799

_ a5Zd59AD>C
8A9F9FAB

_ a5eQ59899D
8AA98AAG38AAAB79A

gOf i VOZZ

Odec O [gWOY1 OP9D1	8E79C	Odec O [gWOY1 S t x OP9D1	9979C

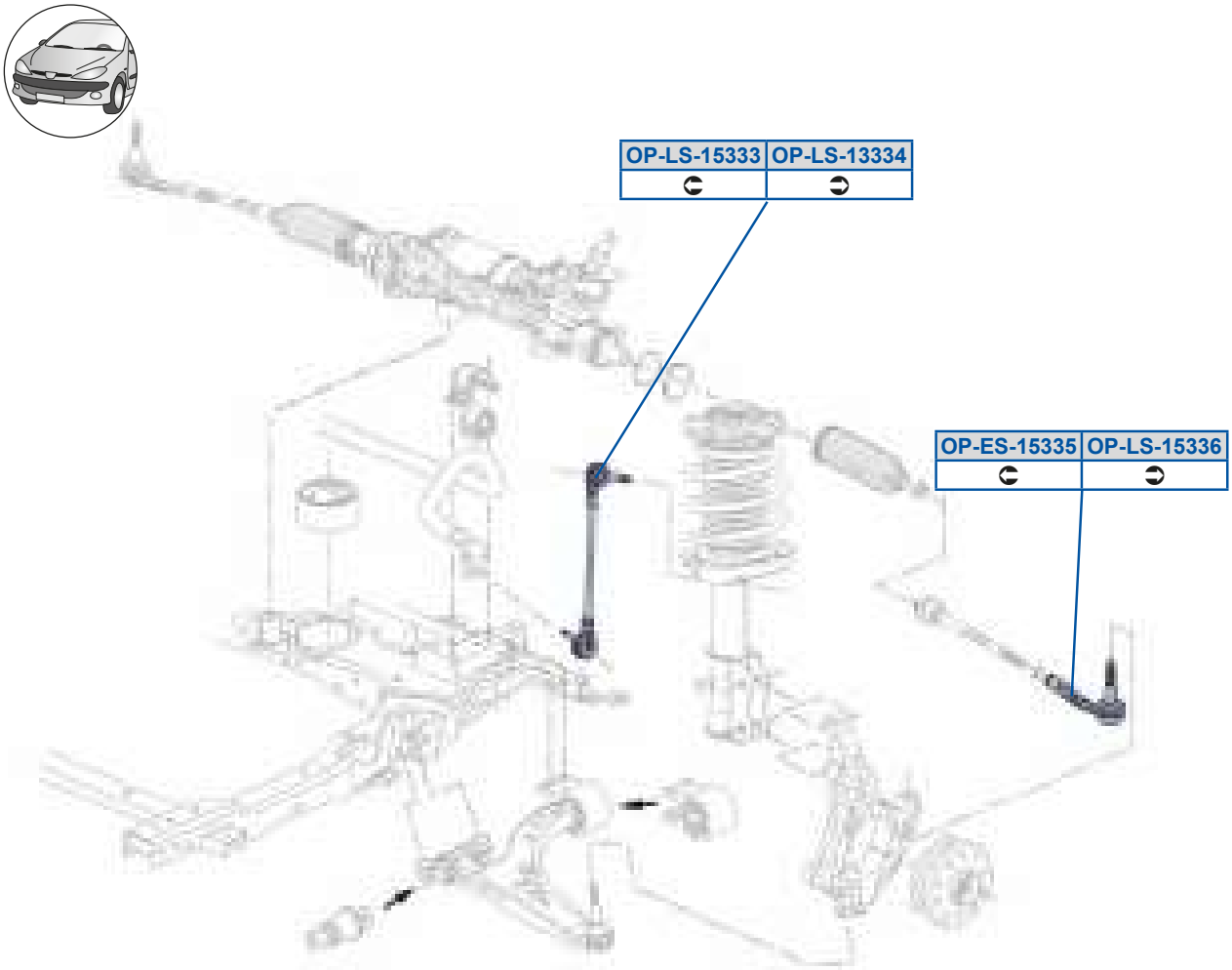

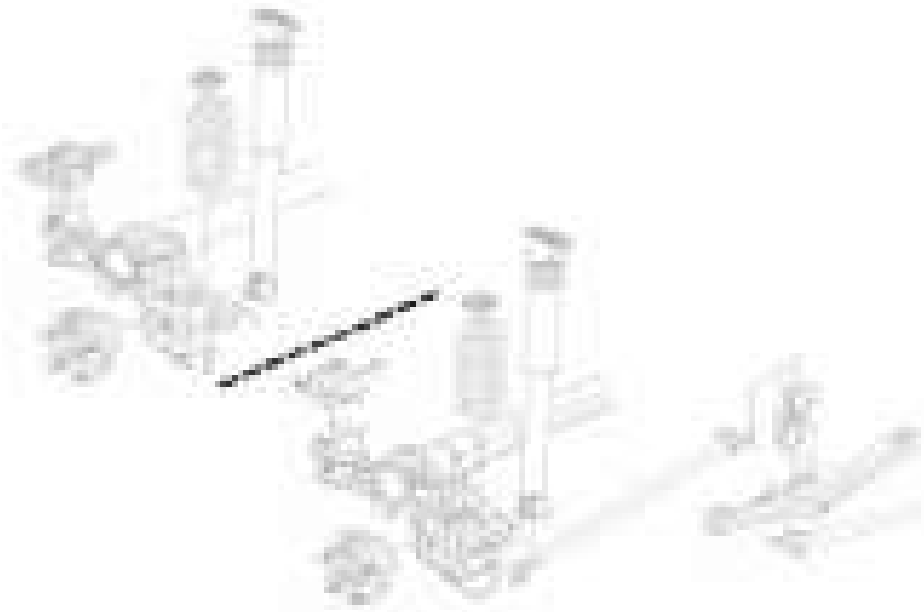

MOOG

_ a5Sd59CAAC
AG77F7FB

_ a5Sd59CAAD
AG77F7FA

_ a5Zd59CAAA
AG77877A

_ a5Zd59CAAB
AG77877B

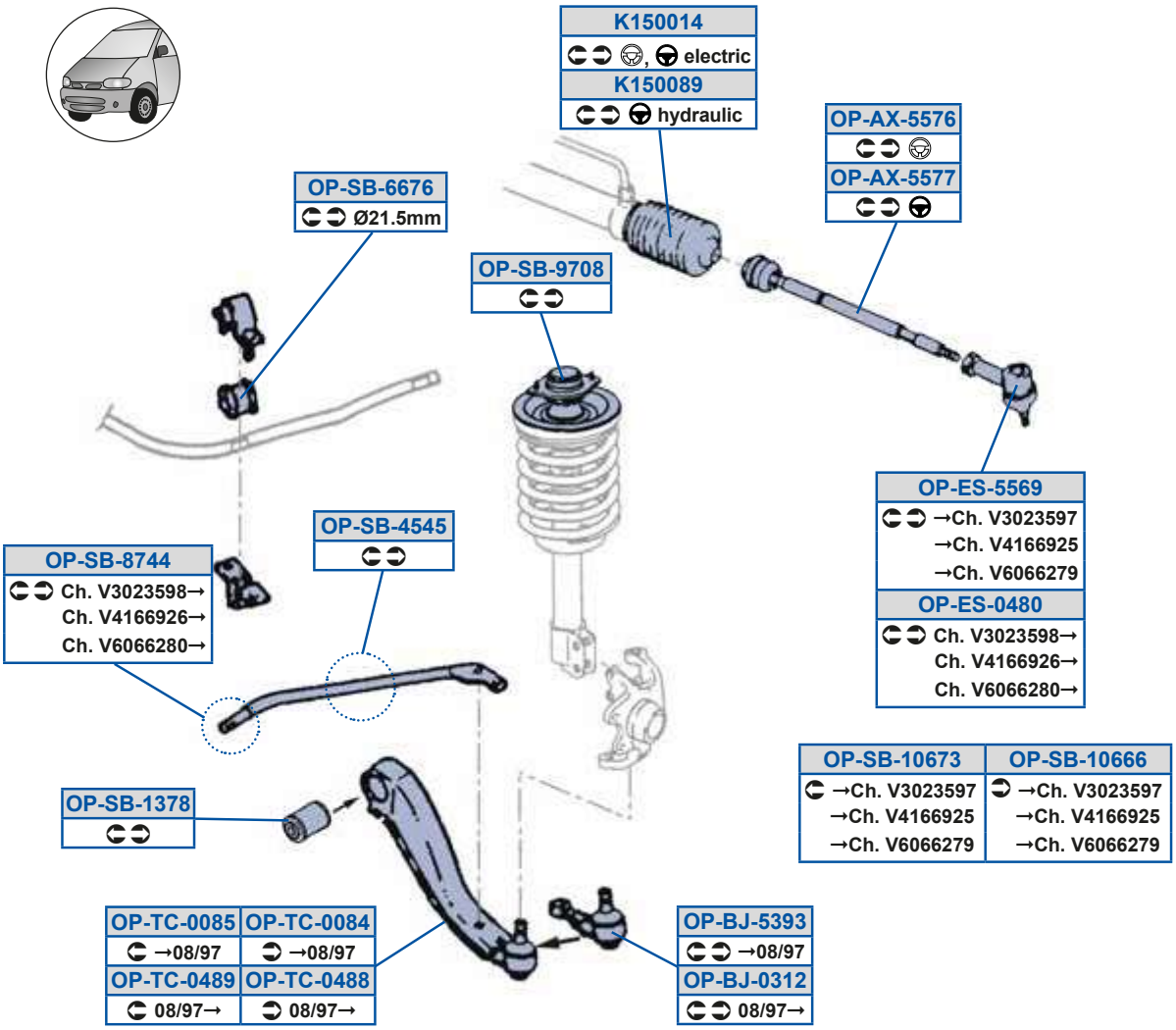

OP-SB-8745

MOOG

Y9C889B
7G79F9D39D78779G

Y9C88FG
9D7A99FD

_a5Oi5CCED
9D7A7B883A998CC

_a5Oi5CCEE
9D7A99FB

_a5PX58A9>
8D7A9793G7CAGFGD

_a5PX5CAGA
8D7A89F38D7A8D8

_a5Sd58BF8
9D7DC9DC3GA8G9BBD

_a5Sd5CCDG
9D788G9C39D7FEFDF

_a5dP598DDD
ACA9F73G7BBC878

_a5dP598DEA
ACA9F83G7BBC877

_a5dP59AEF
AC9A783G7BBC7GE

_a5dP5BCBC
7ACACD83ACACD8

_a5dP5DDED
AC789E3G7BBEGBD

_a5dP5FEBB
ADACD93G7CAG7CE

_a5dP5FEBC
9BBBAF8C3CB79DAD

_a5dP5GE8F
887B97883A89C7A

_a5eQ588FB
AC97793G78DDAG8

_a5eQ588FC
AC977A3G78DDAG7

_a5eQ58BFF
AC97893G7CB9CEA

_a5eQ58BFG
CAC97883G7CB9CE9

Q s [E W5L 8G7>8891

gOf i VOZZ

gOf i VOZZ

Q_[P_ [WW	8G789 8; 79;	Q_[P_ [WWQ1P P w 7S t x 0T; C1	9; 78B 8; 79;
Q_[P_ e_f c [WWQ1 0T; C1	8G789 8; 79;		

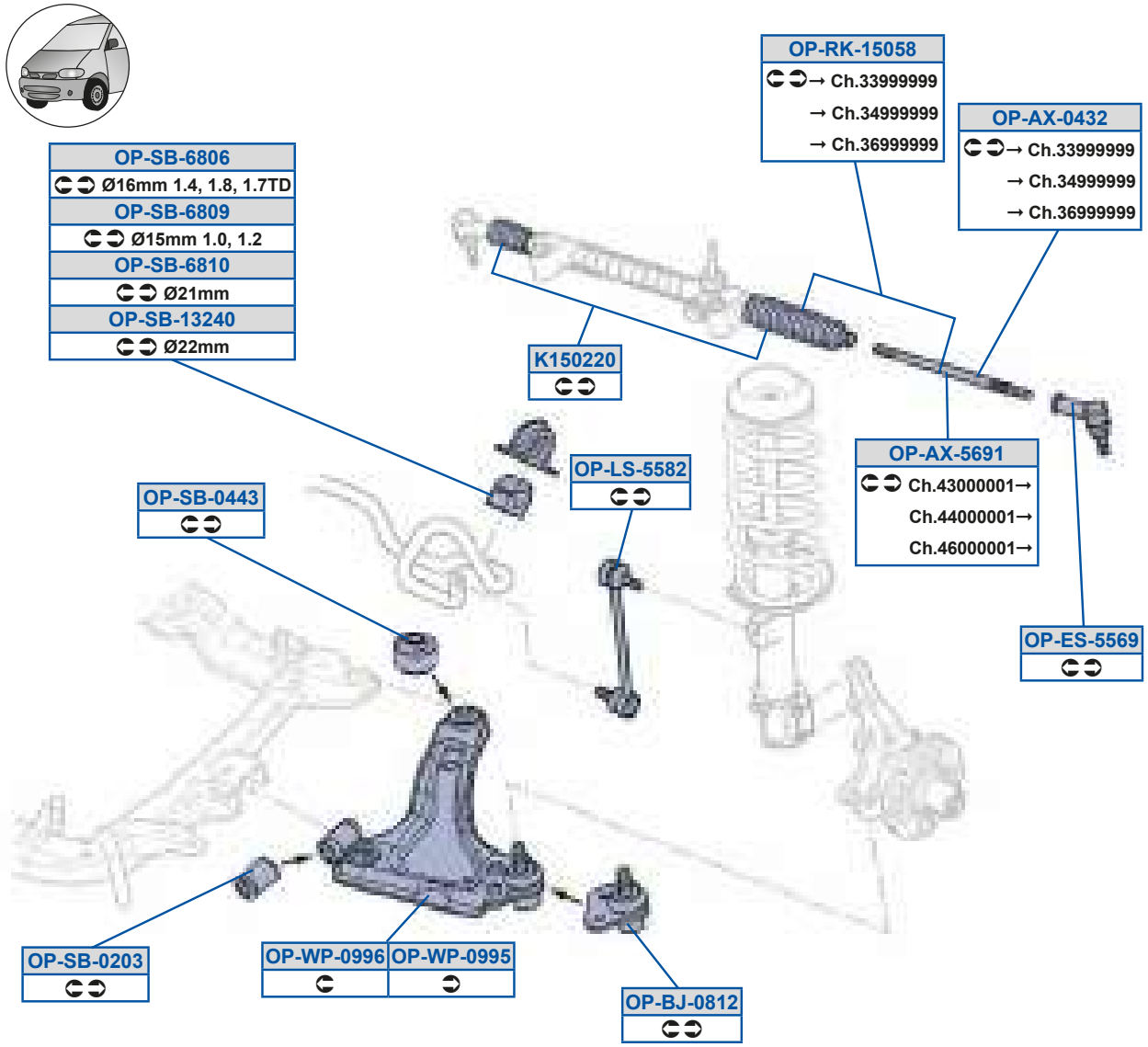

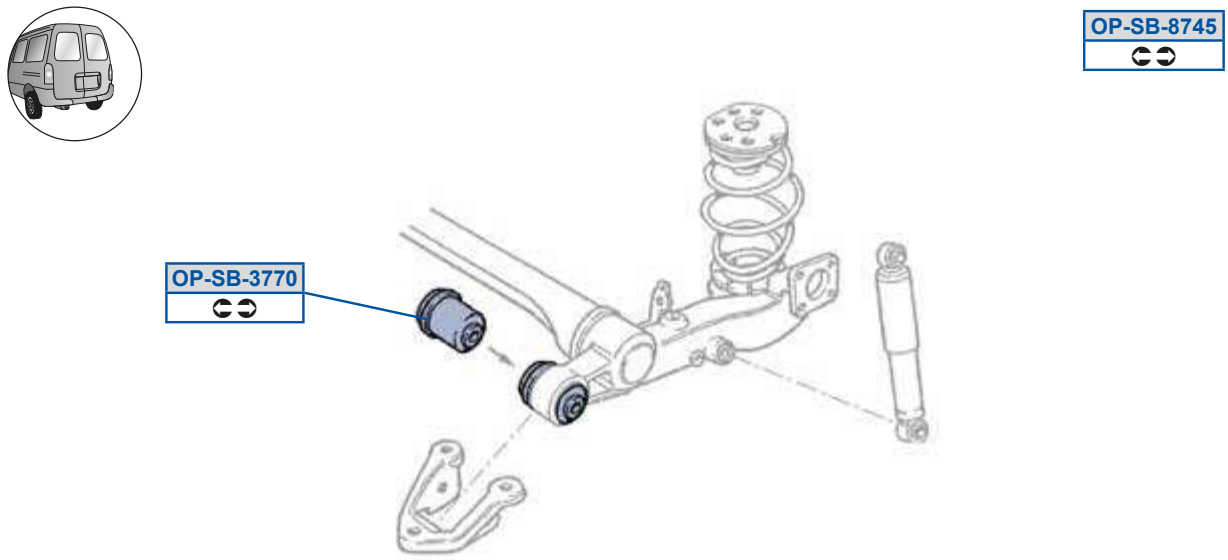

MOOG

Y9C8>>8
8D7G89839D7FEFDG

_ a5dP58BBA
8A8AF8C839BBA787A

_ a5h a58GGD
8A8B77AE38A8B77AG

_ a5Oi 58BA>
9D7FEFDE3GA8G9B98

_ a5dP59A>B8
9BB7DBGF

_ a5Oi 5CDG9
8D7A78E38D7AFBB

_ a5dP5AEE8
7B79DBB3B79DBB

_ a5PX58F9>
AC9F7A3G8GDAGB

_ a5dP5DF8D
AC78A73G7BDFCDE

_ a5Sd5CCDG
9D788G9C39D7FEFDF

_ a5dP5DF8G
9BB7AC9A

_ a5Zd5CCF>
AC7D873G7BGD88D

_ a5dP5DF98
8A89CBG9

_ a5cY59C8CF
9D7FEFDE3GA8G9B98

_ a5dP5FEBC
9BBBAF8C3CB79DAD

_ a5dP58>8A
G8GGCED3G8GGGD8

_ a5h a58GGC
8A8B77AF38A8B77B7

Q s [ËW8BG7>889 5L1
gOf i VOZZ

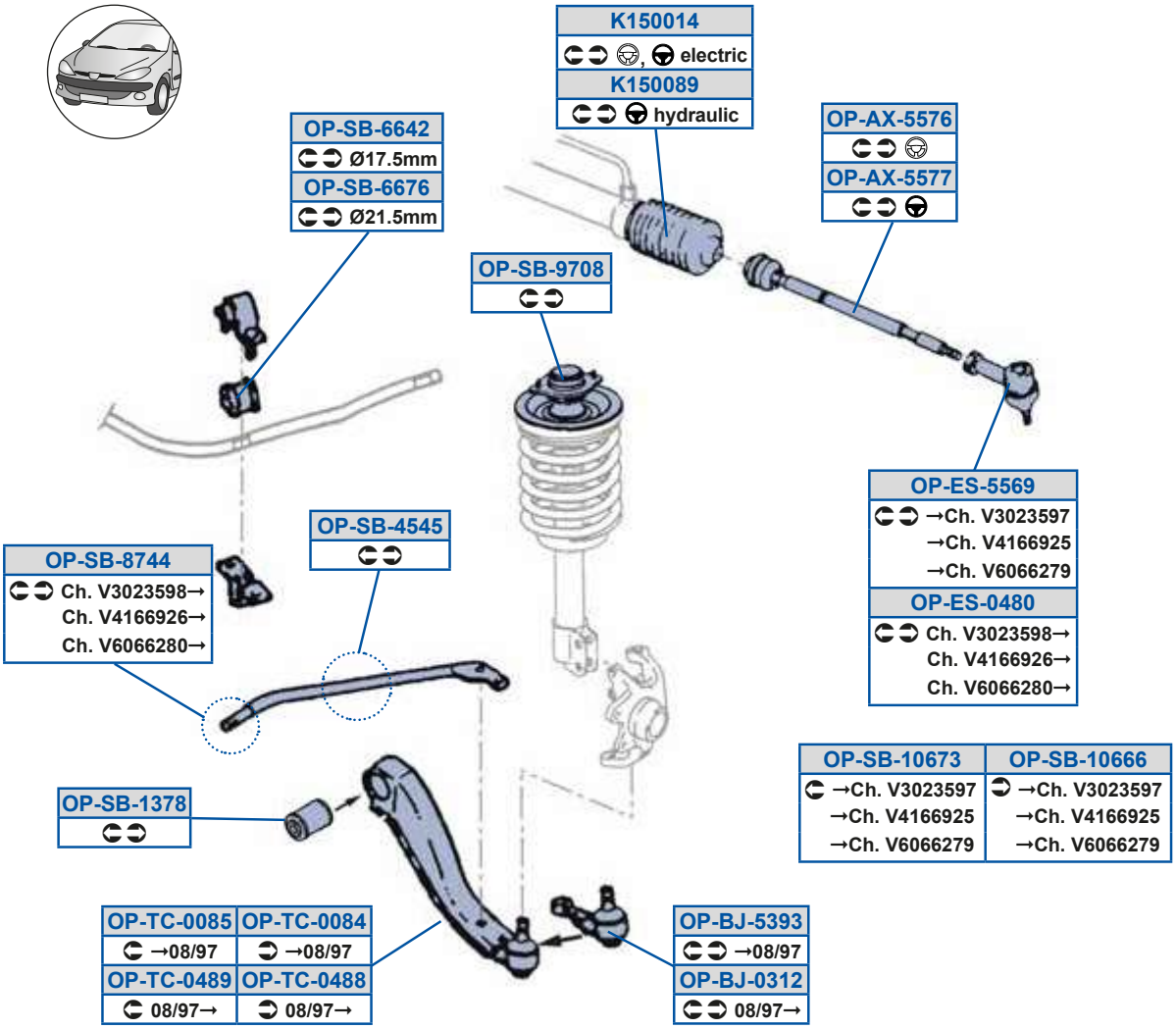
K150014
electric
K150089
hydraulic
OP-SB-6642
Ø17.5mm
OP-SB-6676
Ø21.5mm
OP-AX-5576
OP-AX-5577
OP-SB-9708
OP-ES-5569
→Ch. V3023597
→Ch. V4166925
→Ch. V6066279
OP-ES-0480
Ch. V3023598→
Ch. V4166926→
Ch. V6066280→
OP-SB-4545
OP-SB-8744
Ch. V3023598→
Ch. V4166926→
Ch. V6066280→
OP-SB-10673
→Ch. V3023597
→Ch. V4166925
→Ch. V6066279
OP-SB-10666
→Ch. V3023597
→Ch. V4166925
→Ch. V6066279
OP-SB-1378
OP-TC-0085
→08/97
OP-TC-0084
→08/97
OP-TC-0489
08/97→
OP-TC-0488
08/97→
OP-BJ-5393
→08/97
OP-BJ-0312
08/97→

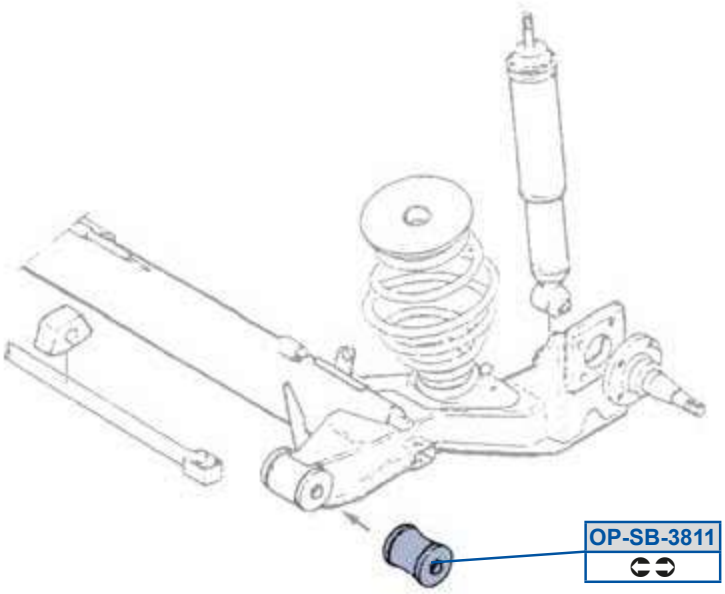
OP-SB-8745
OP-SB-3811

MOOG

Y9C889B
7G79F9D39D78779G

_ a5dP598DDD
ACA9F73G7BBC878

_ a5dP5FEBC
9BBBAF8C3CB79DAD

Y9C88FG
9D7A99FD

_ a5dP598DEA
ACA9F83G7BBC877

_ a5dP5GE8F
887B97883A89C7A

_ a5Oi 5CCED
9D7A7B883A998CC

_ a5dP59AEF
AC9A783G7BBC7GE

_ a5eQ588FB
AC97793G78DDAG8

_ a5Oi 5CCEE
9D7A99FB

_ a5dP5AF99
G798EFBC

_ a5eQ588FC
AC977A3G78DDAG7

_ a5PX58A9>
8D7A9793G7CAGFGD

_ a5dP5BCBC
7ACACD83ACACD8

_ a5eQ58BFF
AC97893G7CB9CEA

_ a5PX5CAGA
8D7A89F38D7A8D8

_ a5dP5DDB>
AC787G3G78DFD79

_ a5eQ58BFG
CAC97883G7CB9CE9

_ a5Sd58BF8
9D7DC9DC3GA8G9BBD

_ a5dP5DDED
AC789E3G7BBEGBD

_ a5Sd5CCDG
9D788G9C39D7FEFDF

_ a5dP5FEBB
ADACD93G7CAG7CE

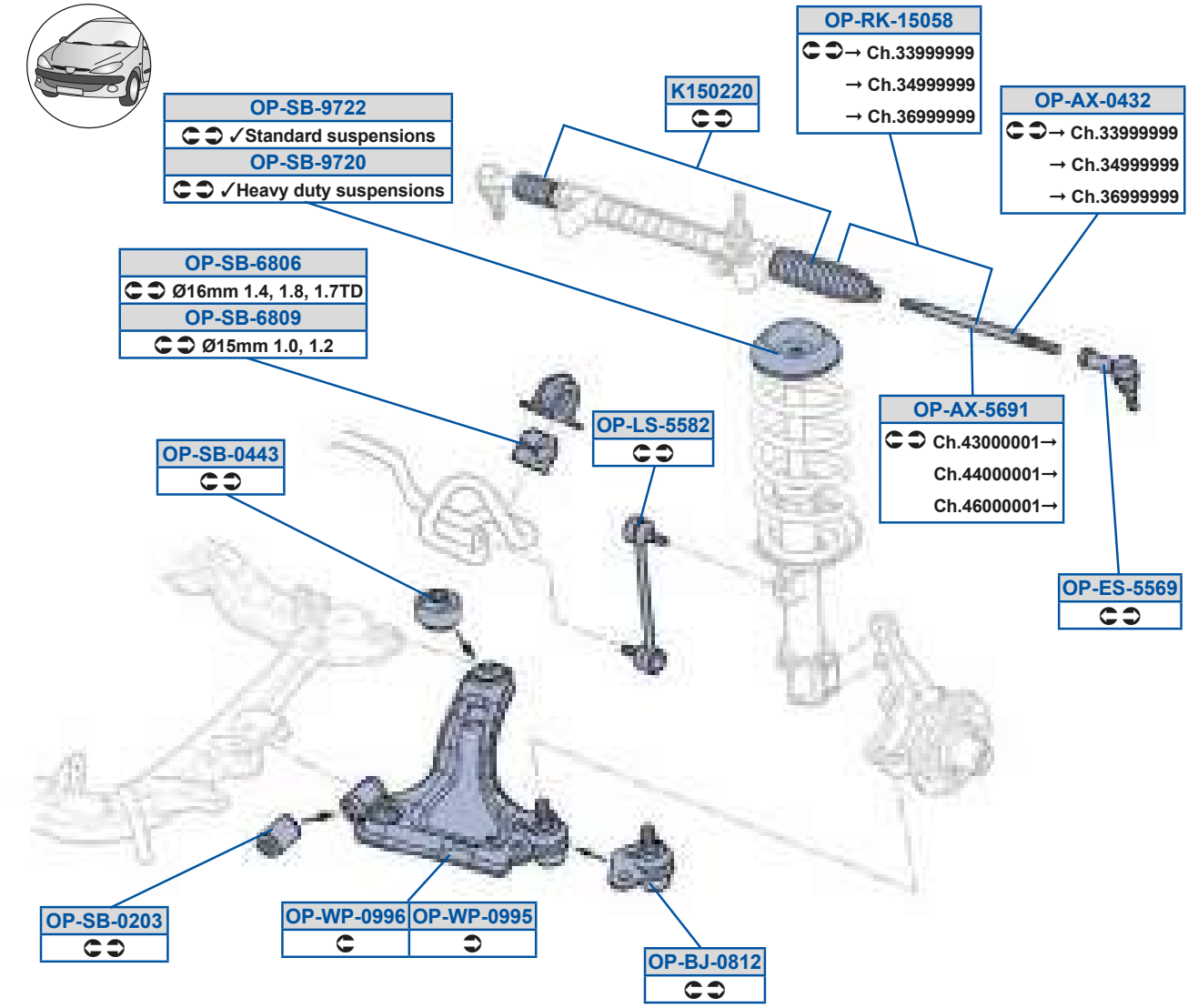
OP-SB-9722
✓Standard suspensions
OP-SB-9720
✓Heavy duty suspensions
K150220
OP-RK-15058
→ Ch.33999999
→ Ch.34999999
→ Ch.36999999
OP-AX-0432
→ Ch.33999999
→ Ch.34999999
→ Ch.36999999
OP-SB-6806
Ø16mm 1.4, 1.8, 1.7TD
OP-SB-6809
Ø15mm 1.0, 1.2
OP-LS-5582
OP-AX-5691
Ch.43000001→
Ch.44000001→
Ch.46000001→
OP-SB-0443
OP-ES-5569
OP-SB-0203
OP-WP-0996
OP-WP-0995
OP-BJ-0812

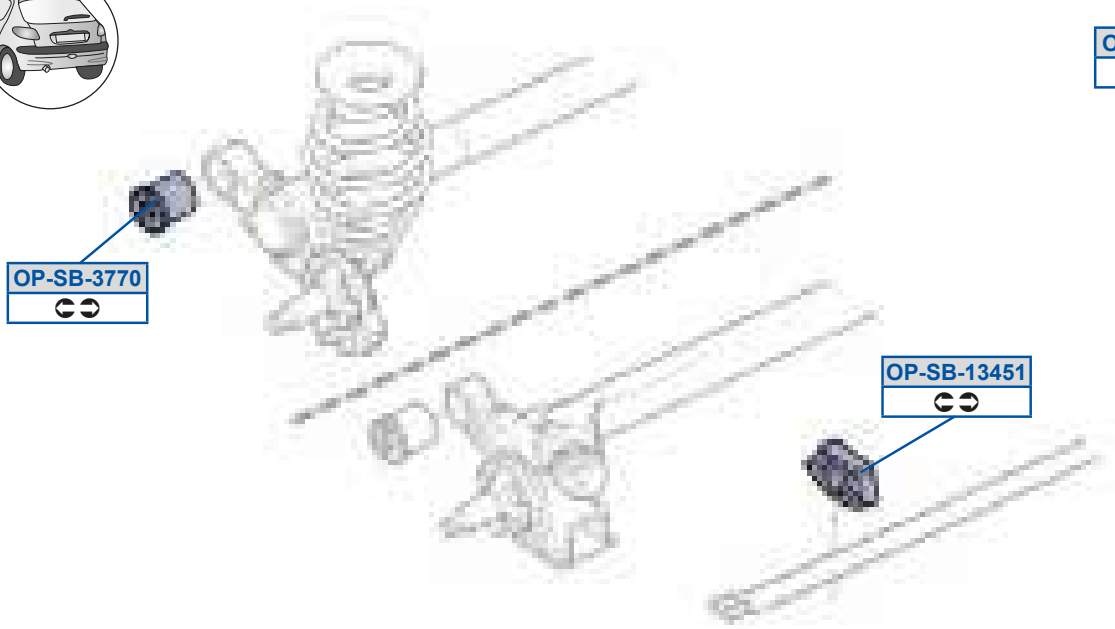
OP-SB-8745
OP-SB-3770
OP-SB-13451

Y9C8>>8
8D7G89839D7FEFDG

_ a5dP58BBA
8A8AF8C839BBA787A

_ a5h a58GGC
8A8B77AF38A8B77B7

_ a5Oi 58BA>
9D7FEFDE3GA8G9B98

_ a5dP59ABC9
BBBAAC

_ a5h a58GGD
8A8B77AE38A8B77AG

_ a5Oi 5CDG9
8D7A78E38D7AFBB

_ a5dP5AEE8
7B79DBB3B79DBB

_ a5PX58F9>
AC9F7A3G8GDAGB

_ a5dP5DF8D
AC78A73G7BDFCDE

_ a5Sd5CCDG
9D788G9C39D7FEFDF

_ a5dP5DF8G
9BB7AC9A

_ a5Zd5CCF>
AC7D873G7BGD88D

_ a5dP5FEBC
9BBBAF8C3CB79DAD

_ a5c Y59C8CF
9D7FEFDE3GA8G9B98

_ a5dP5GE>8
7ABBC9C

_ a5dP58>8A
G8GGCED3G8GGGD8

_ a5dP5GE>>
ABBC9A3G7BDFCCB

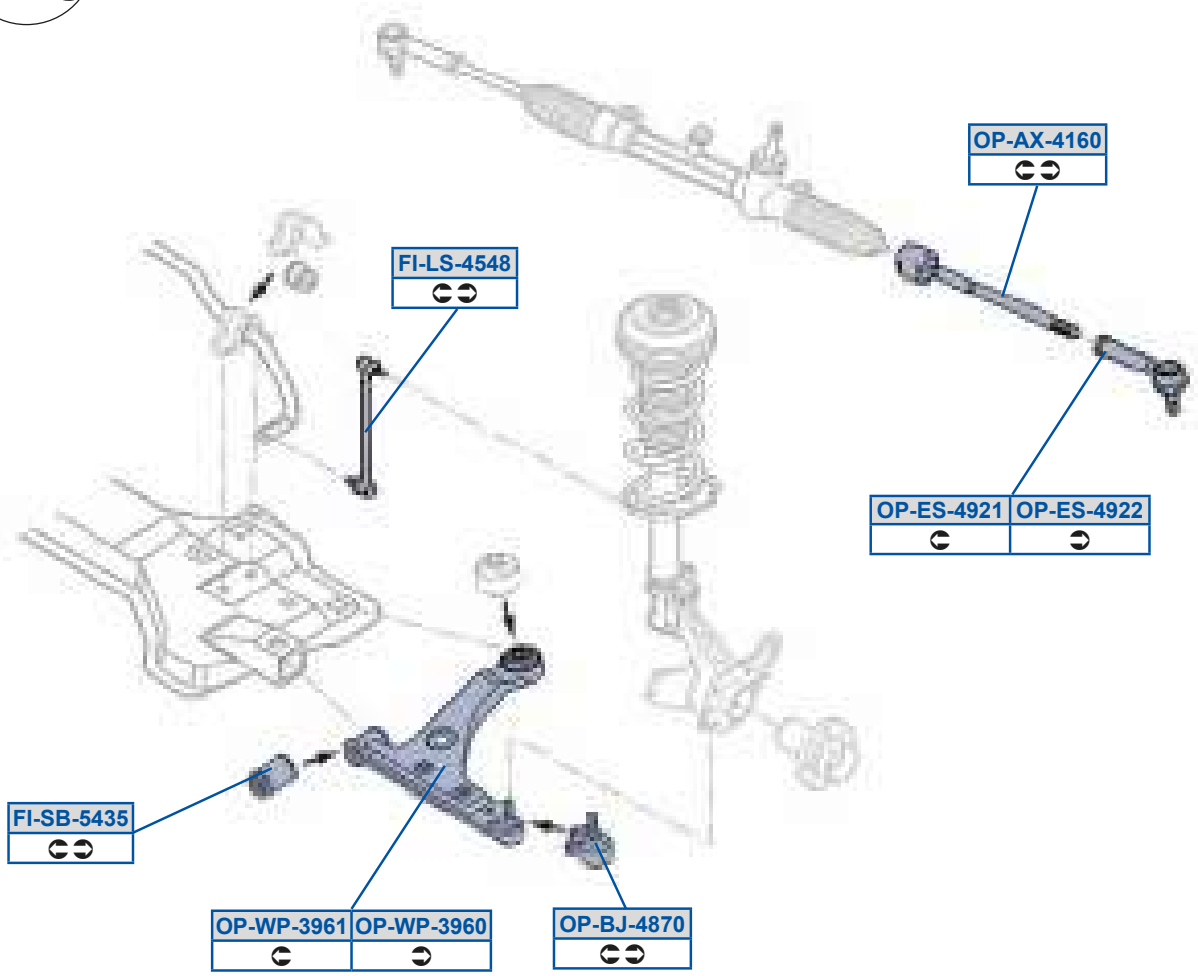
OP-AX-4160
FI-LS-4548
OP-ES-4921
OP-ES-4922
FI-SB-5435
OP-WP-3961
OP-WP-3960
OP-BJ-4870

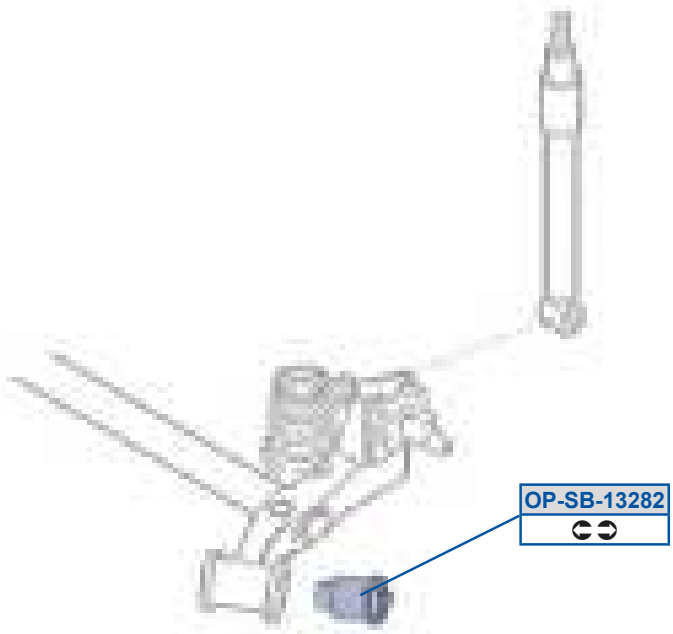
OP-SB-13282

TV5Zd5BCBF
8AA989F73CCE77ECA

TV5dP5CBAC
8A9D7DDD3CCE7A9A9

_a5Oi5B9D8
GA8FG7993GA8GDCB7

_a5PX5BFE8
AC97DE3AC97FE

_a5Sd5BG>9
GA8FG79A3GA8GDCB8

_a5Sd5BG>>
GA8FG79B3GA8GDCB9

_a5dP59A>F>
8A9C8CG73B79CAF

_a5ha5AGD8
8AB9DCCA3CCE7A9A8

_a5ha5AGD9
8AB9DCC93CCE7A9A7

Tc_] eSc0 [WWOP10f GG1	987GF 9878B	[_] eSc Sk [WW0[GF1	8E7GF 8F7GG

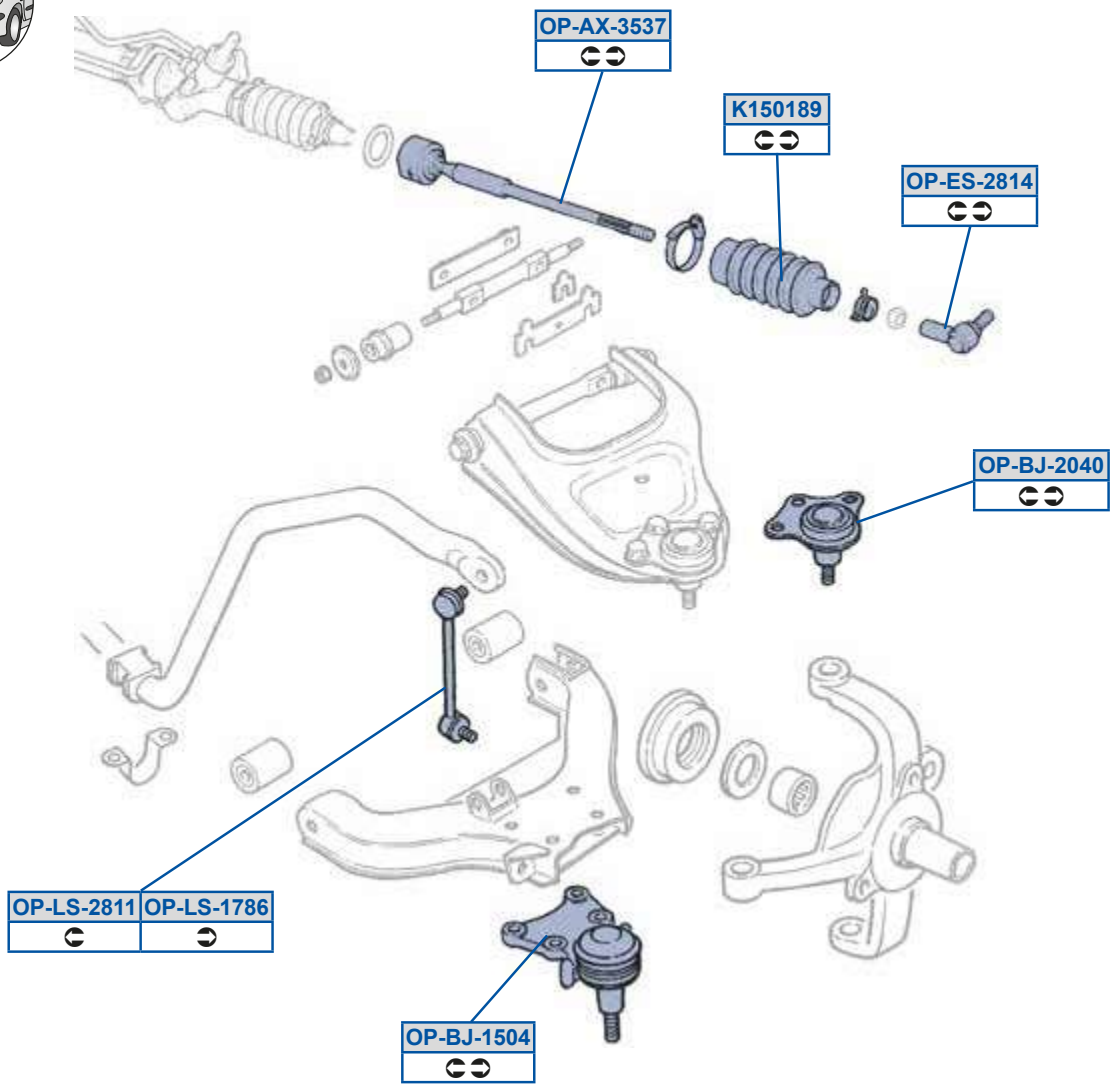

MOOG

Y9C89FG
G77G7D3GE8FBF97

_ a5Oi 5ACAE
GE8FBF8G

_ a5PX59C8B
AC9F9F3GBBCGBDC

_ a5PX5>8B8
A87F9A3GBAEBB9B

_ a5Sd5>F9B
GE8FBF98

_ a5Zd59EFD
GE78F99E3GE89C78A

_ a5Zd5>F99
GE78F99F3GE89C78B

gOf i VOZZ

WdW] W	8E78F	8C79E	WdW] W Q e x	8E78F	8C79E
WdW] W d e x	8E78F	8C79E	dt	8E78F	8C79E

✗ 4x4
✗ OPC

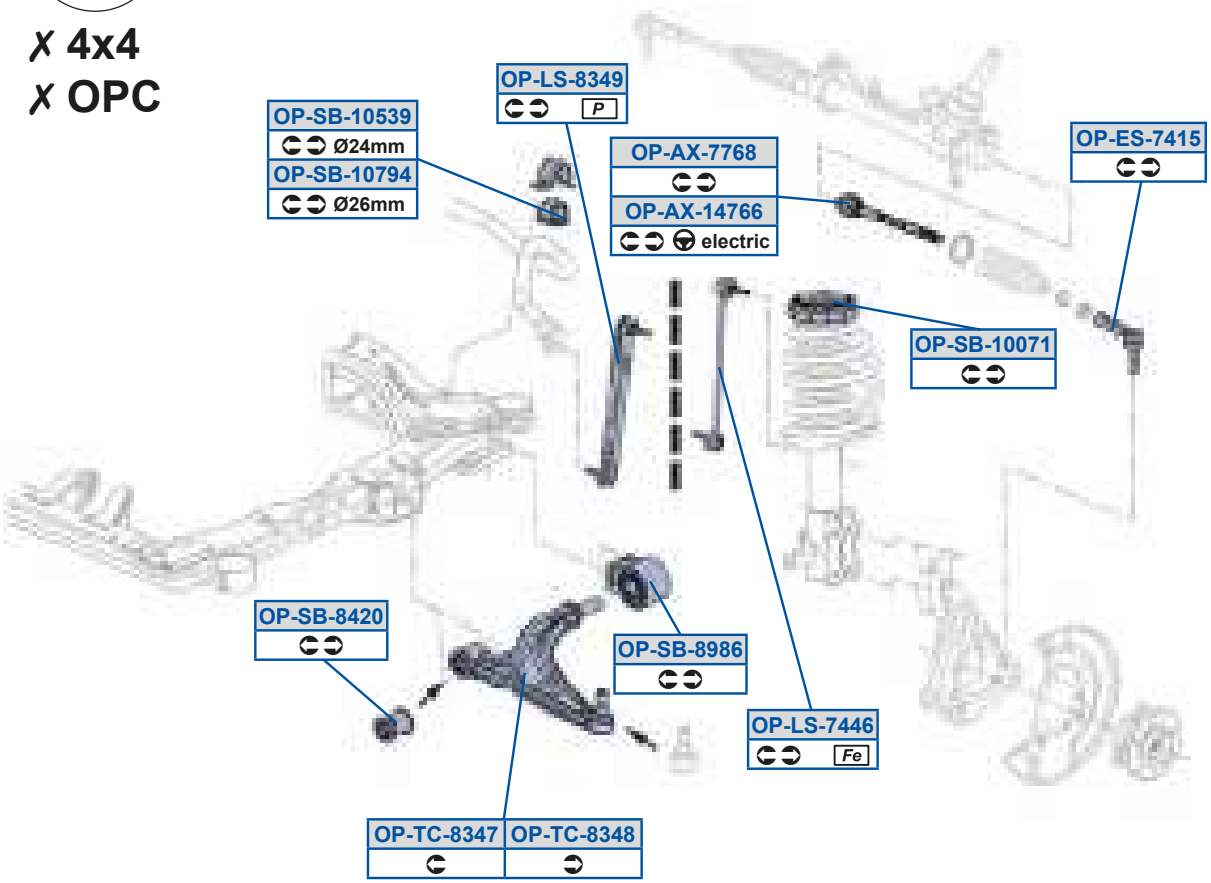

✗ 4x4
✗ OPC

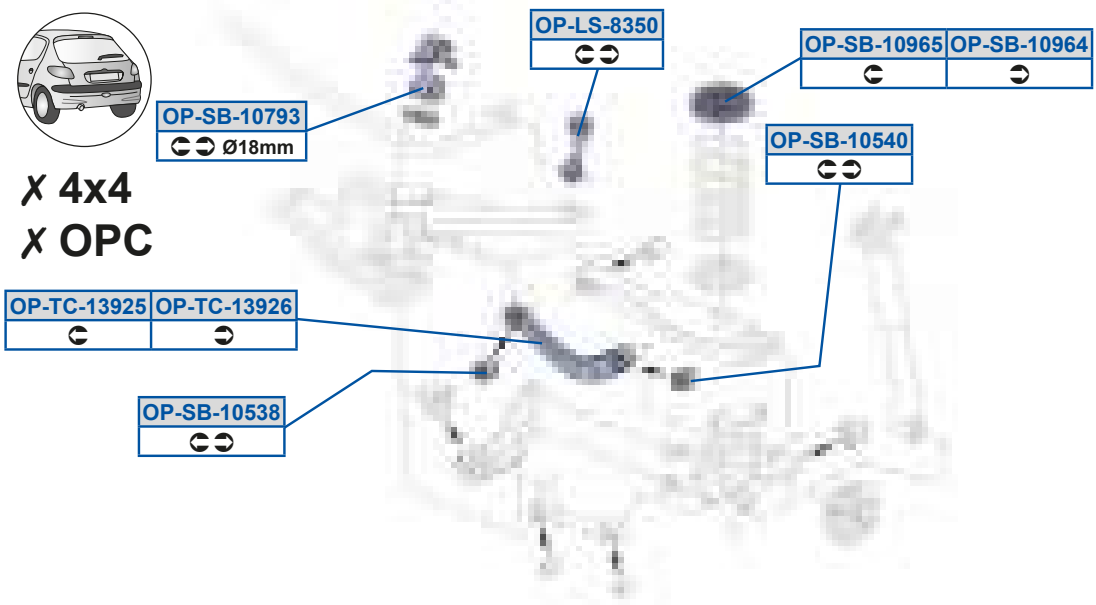

MOOG

_ a5Oi 59BEDD
8AAA9DCA38D7G8FA

_ a5dP598CAG
8A9F8EFB

_ a5eQ59AG>C
8A98G8D938AA8FABB

_ a5Oi 5EEDF
8A9E8GGD

_ a5dP598CB8
8A9AG9993B9A7E9

_ a5eQ59AG>D
8A98G8DA38AA8FABC

_ a5Sd5EB9C
8A9E977738A9EFACG

_ a5dP598EGA
8A9F8EG7

_ a5eQ5FABE
8A9EAD7B38AA8FFFB

_ a5Zd5EBBD
8A9CF7C93AC7D8F

_ a5dP598EGB
8A9F8EF9

_ a5eQ5FABF
8A9EAD7C38AA8FFFC

_ a5Zd5FABG
8A98G8B8

_ a5dP598GDB
8A9E8E79

_ a5Zd5FAC8
8A9F8EG93BBB7F8

_ a5dP598GDC
8A9E8E78

_ a5dP5988E9
8AC77DDA38AC7ACBF

_ a5dP5FB>8
8A98G7G73AC9FDD

_ a5dP598CAF
8A98G8E7

_ a5dP5FGFD
8A9CEEFC38A9F798D

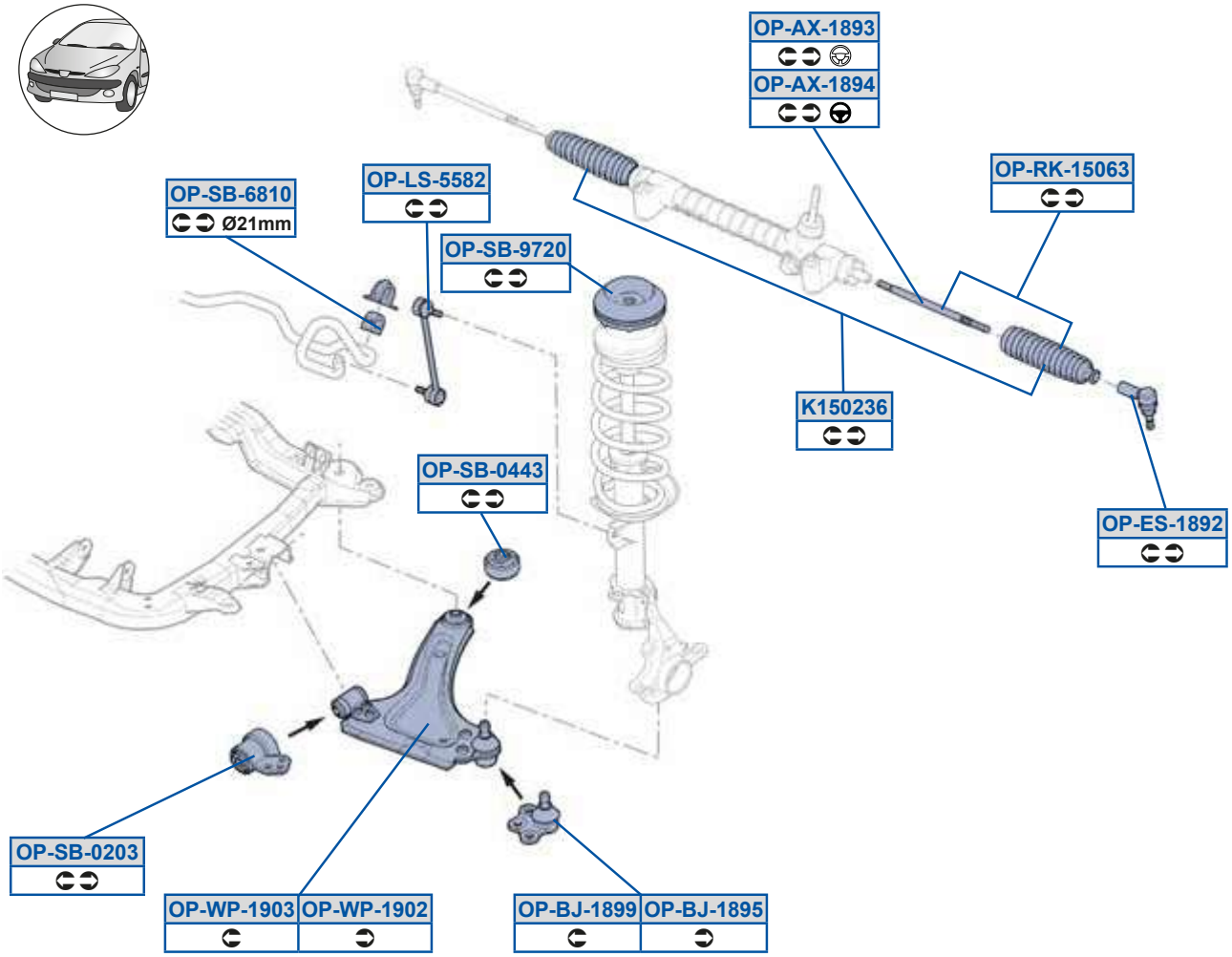
OP-AX-1893
OP-AX-1894
OP-RK-15063
OP-SB-6810
Ø21mm
OP-LS-5582
OP-SB-9720
K150236
OP-SB-0443
OP-ES-1892
OP-SB-0203
OP-WP-1903
OP-WP-1902
OP-BJ-1899
OP-BJ-1895

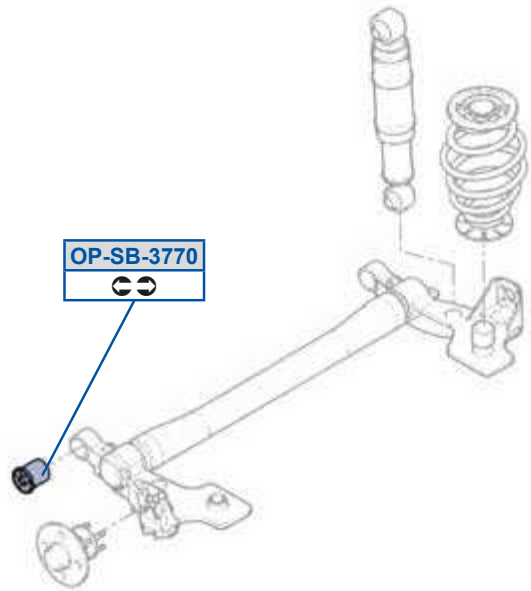
OP-SB-3770

MOOG

Y9C8>AD
8D7A9B839D879G9B

_ a5dP58>8A
G8GGCED3G8GGGD8

_ a5Oi 59FGA
8D7A9AG39D879G99

_ a5dP58BBA
8A8AF8C839BBA787A

_ a5Oi 59FGB
8D7A78D39D887B9G

_ a5dP5AEE8
7B79DBB3B79DBB

_ a5PX59FGC
CAC979D3GA8EBCGG

_ a5dP5DF98
8A89CBG9

_ a5PX59FGG
CAC979C3GA8EBCGF

_ a5dP5GE>8
7ABBC9C

_ a5Sd59FG>
8D7A9B739D879G9A

_ a5h a59G8>
CAC979F3GAAAFCDG

_ a5Zd5CCF>
AC7D873G7BGD88D

_ a5h a59G8A
CAC979E3GAAAFCDF

_ a5cY59C8DA
8D7A78D39D887B9G

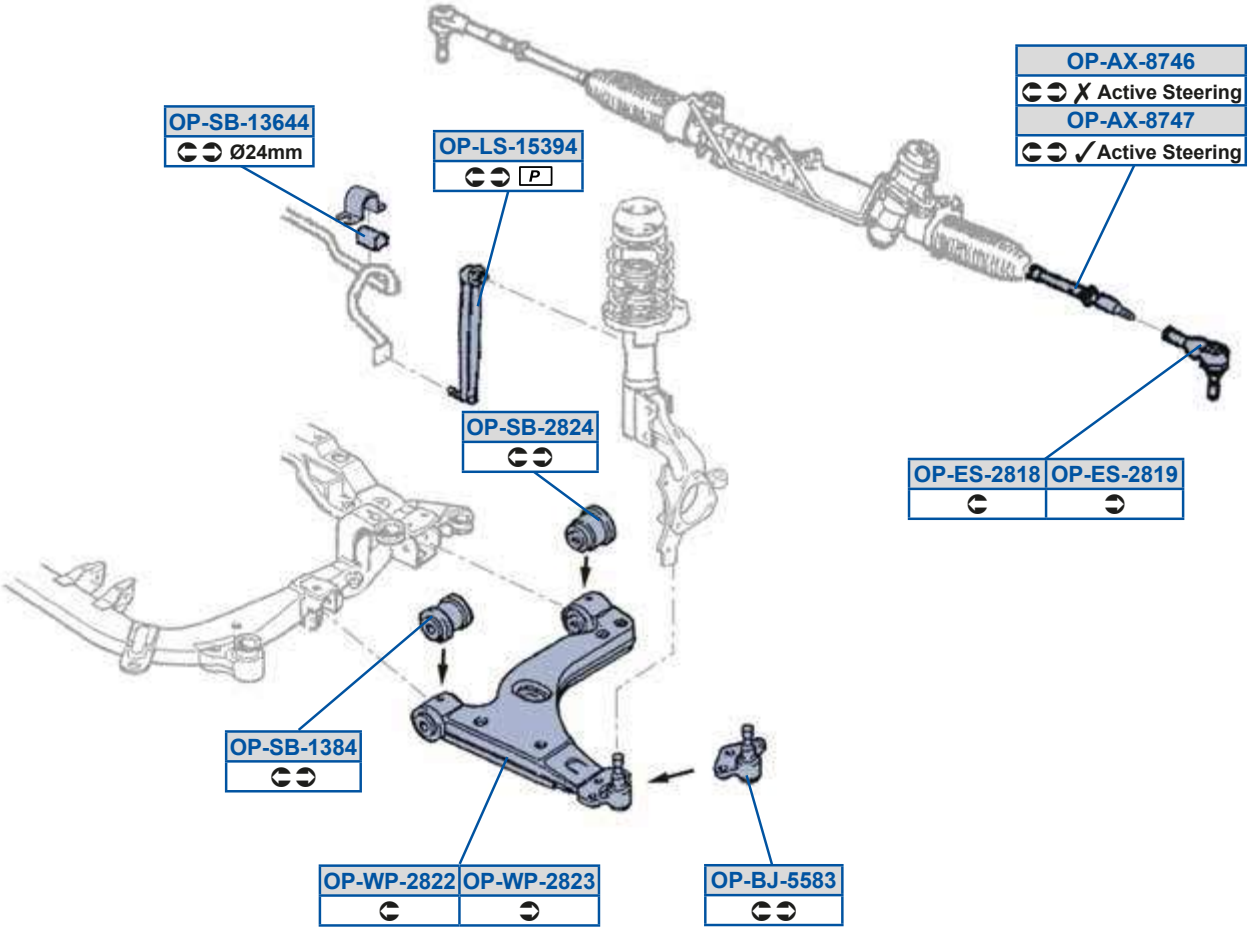
OP-AX-8746
✗ Active Steering
OP-AX-8747
✓ Active Steering
OP-SB-13644
Ø24mm
OP-LS-15394
P
OP-SB-2824
OP-ES-2818
OP-ES-2819
OP-SB-1384
OP-WP-2822
OP-WP-2823
OP-BJ-5583

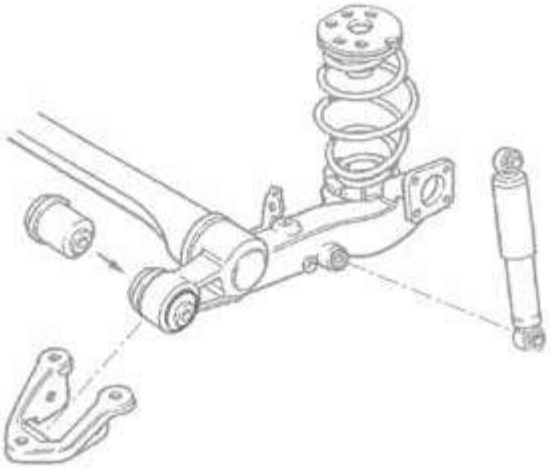

_ a5Oi 5FEBD
8D7G7773GA8GDEEE

_ a5dP5>F>B
9BBAGCF9

_ a5Oi 5FEBE
8D7G7883GA8GDEEF

_ a5h a5>F>>
9BBCBBEE

_ a5PX5CCFA
G7BFECD83G7C89GF9

_ a5h a5>F>A
9BBCBBEF

_ a5Sd5>F9F
GA8EGCCG3GA8F89A9

_ a5Sd5>F9G
GA8EGCCF3GA8F89AA

_ a5Zd59CAGB
AC78ED3AC7D88

_ a5dP59ADBB
8A97B7E8

_ a5dP59AFB
AC9ACE3AC9ADB

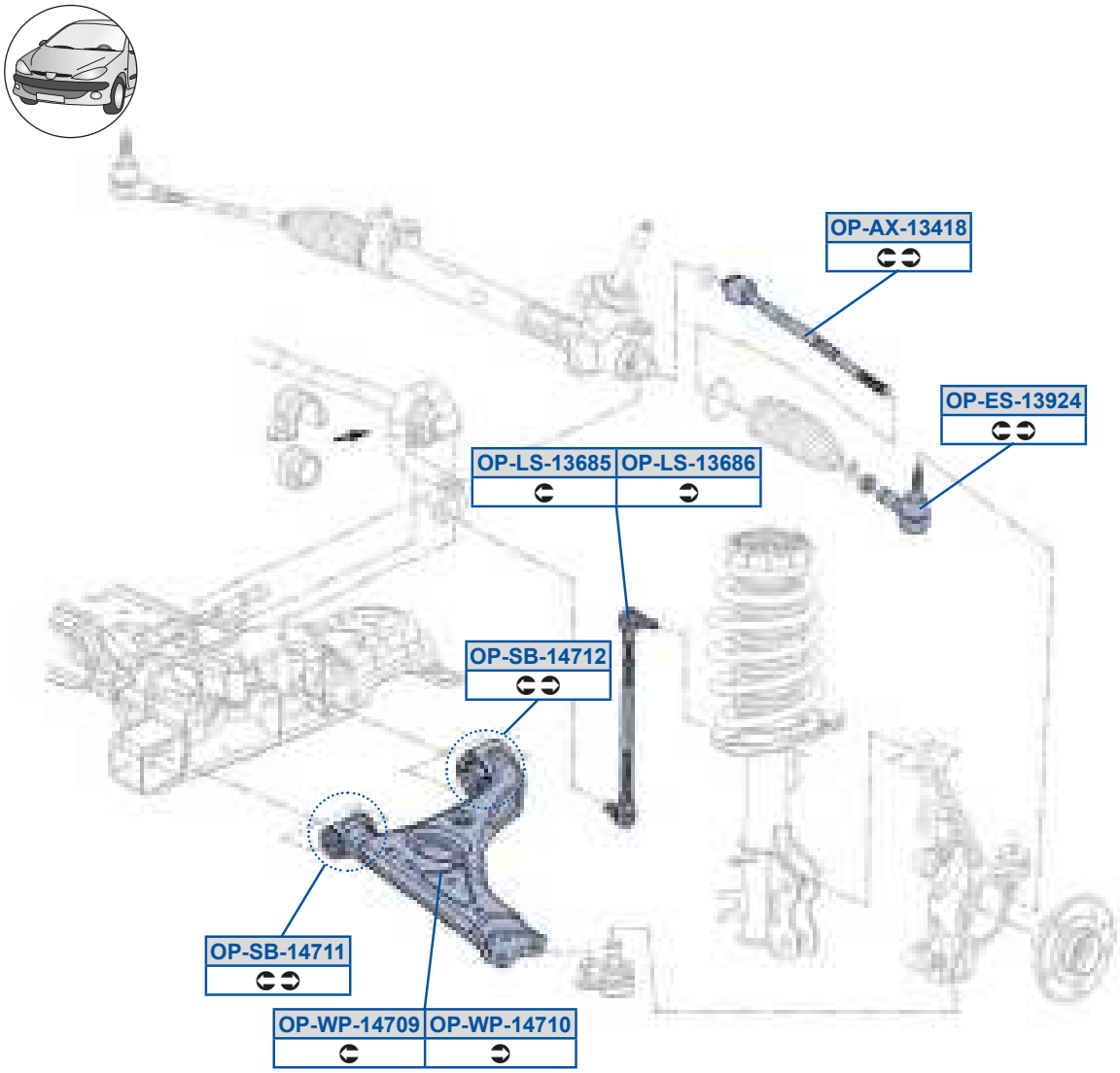
OP-AX-13418
OP-ES-13924
OP-LS-13685
OP-LS-13686
OP-SB-14712
OP-SB-14711
OP-WP-14709
OP-WP-14710

✗ 4x4

✓ 4x4

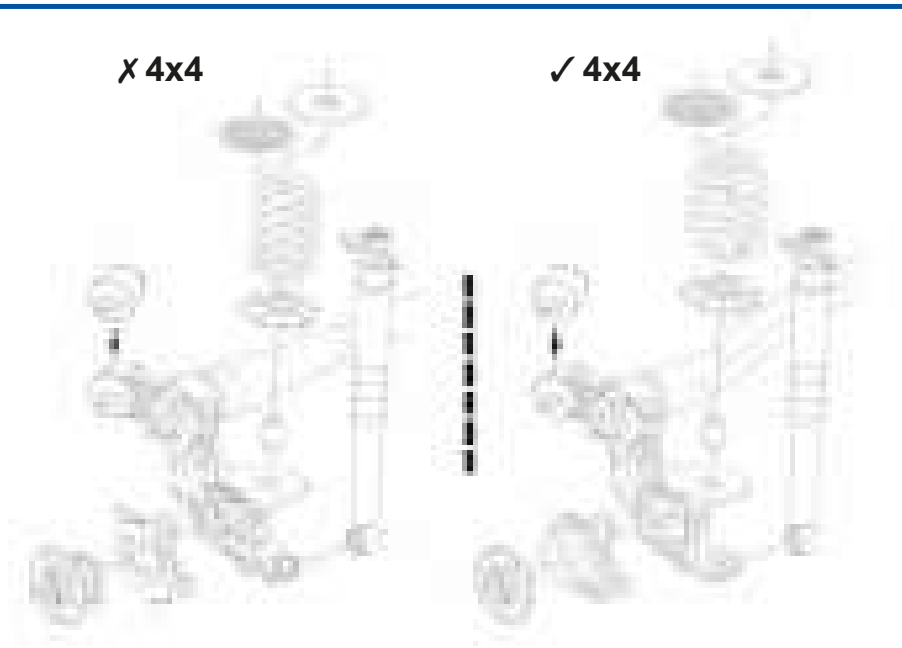

_ a5Oi 59AB9F
GCG8C9983GCGC9G9G

_ a5Sd59AG>B
8D7G97A3G97788

_ a5Zd59ADFC
AC79A83GCGB9C8G

_ a5Zd59ADFD
AC79A93GCGB9C97

_ a5dP59BE99
AC9C9A /40BAC9C9B /40

_ a5dP59BE9>
AC9C9A /40BAC9C9B /40

_ a5h a59BE8G
GBCB7DDF3GC79CE7D

_ a5h a59BE98
GBCB7DDG3GC79CE7C

[_gO] _ [WOD1Q uéO E81	987GF 8C798	[_gO] _ [WOD1gt O E81	987GF 8C798
[_gO] _ [9OD1QÉt é 7Qt u OSRIf RIVR1	987GF 8C798		

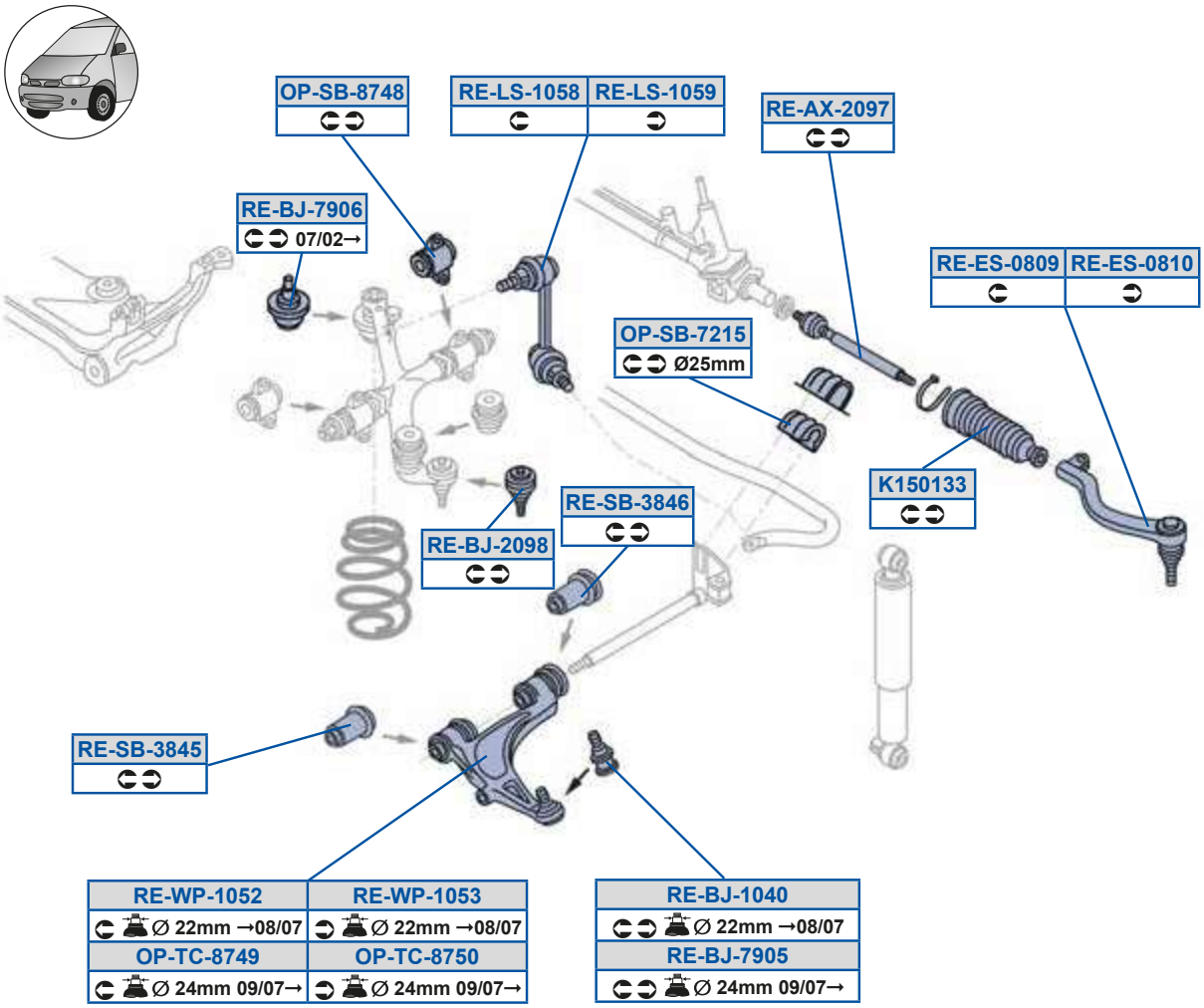

RE-SB-10929

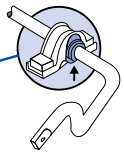

OP-SB-15690

MOOG

Y9C89AA
G8D8CD7

c S5PX5>8GF
G8C7CCB3G8D7CCB

c S5dP5AFBC
BC777GC3CBB9A77I 00

_ a5dP59CDG8
G87G8AB

c S5PX5EG8C
GA8GBFCE

c S5dP5AFBD
BC777GB3CBCE777I 00

_ a5dP5E>9C
BC779883G8D7C88

c S5PX5EG8D
B788777I 00

c S5h a598C>
BB8F9893G87GFC9

_ a5dP5FEBF
BC777G8

c S5Sd58F8G
G8D8CD9

c S5h a598CA
G87GFCA3G87GGB8

_ a5eQ5FEBG
F977EC79EA3GA8GBFCA

c S5Sd58F98
G8D8CDA

_ a5eQ5FEC8
F977EC79EB3GA8GBFCC

c S5Zd598CF
G8D7BGF3GA8G9DEA

c S5Oi 5>8GE
G8D8CD83GA8GD9B8

c S5Zd598CG
G8D7BGG3GA8G9DEB

c S5PX598B8
G87GG7G3G8D7CCC

c S5dP598G>G

gOf i VOZZ

[_gO] _ [WOP1QÉt é 7Qt u Ci D; 1	8C798	[_gO] _ [WOP1Q uéCi D; 1	8C798
[_gO] _ [WOP1gO] Ci D; 1	8C798		

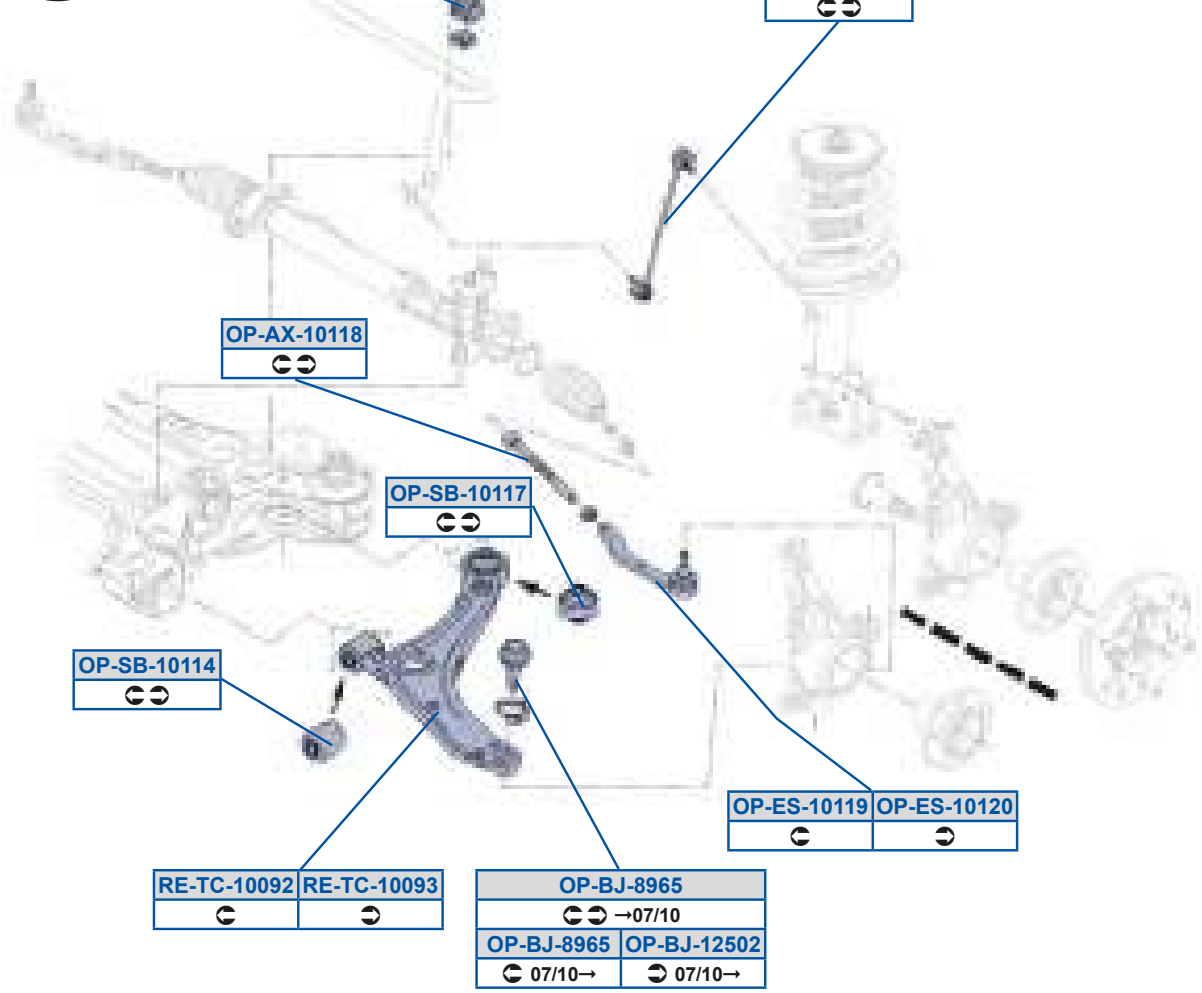

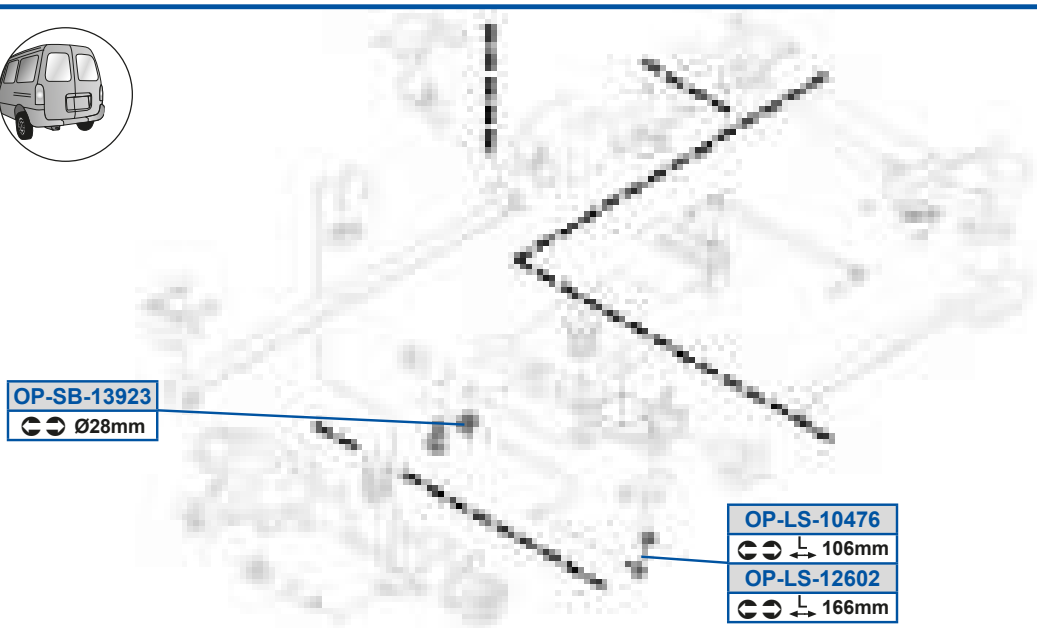

MOOG

_ a5Oi 59899F
BFC989AEAn3GA8DEDFE

_ a5dP59899B
F977DFFFE8 /40

_ a5PX59>C8>
BB7F9C93GA8GE9AA

_ a5dP59899E
F977DFFFE8 /40

_ a5PX5FGDC
F977DFFFEE3GA8GE9AA

_ a5dP59ADA8
GA8GEA9E

_ a5Sd59899G
BFC97DEA7n3GA8DEDFF

_ a5dP59AG>A
GA8GEAAC

_ a5Sd5989>8
BFC977EF7n3GA8DEDFG

c S5eQ5988G>
F977DFFFEC3GA8GE98C

_ a5Zd598BEC
BB8G9G83GA8GEA9C

c S5eQ5988GA
F977DFFFE83GA8GE98B

_ a5Zd598BED
BB8GA7B3GA8GEAA9

_ a5Zd59>D8>
BB97GCB3GA8DFDEC

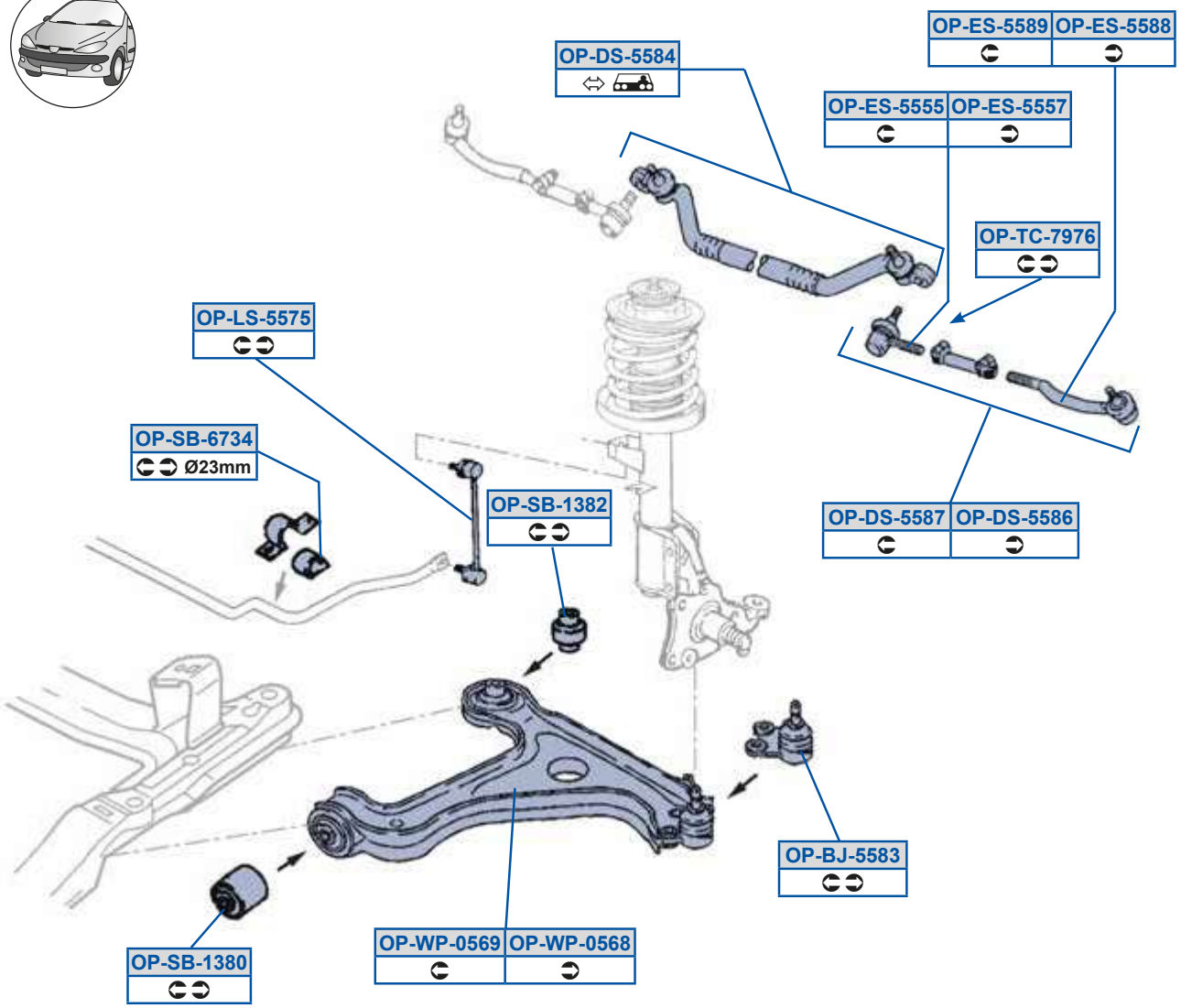
OP-DS-5584
OP-ES-5589
OP-ES-5588
OP-ES-5555
OP-ES-5557
OP-TC-7976
OP-LS-5575
OP-SB-6734
Ø23mm
OP-SB-1382
OP-DS-5587
OP-DS-5586
OP-BJ-5583
OP-SB-1380
OP-WP-0569
OP-WP-0568

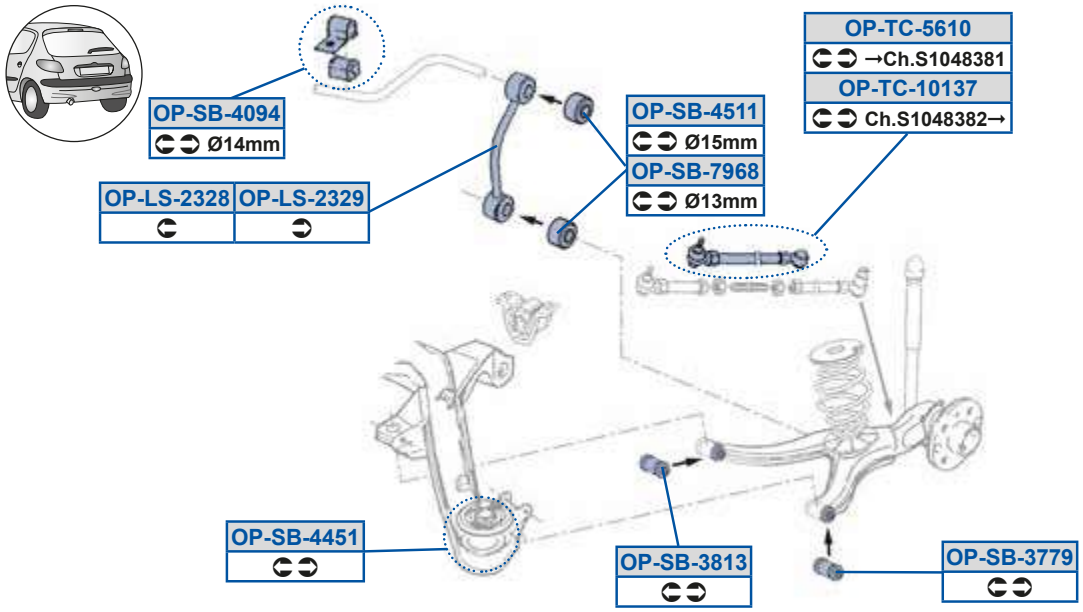
OP-TC-5610
→Ch.S1048381
OP-TC-10137
Ch.S1048382→
OP-SB-4094
Ø14mm
OP-SB-4511
Ø15mm
OP-SB-7968
Ø13mm
OP-LS-2328
OP-LS-2329
OP-SB-4451
OP-SB-3813
OP-SB-3779

_ a5PX5CCFA
G7BFECD83G7C89GF9

_ a5Rd5CCFB
G7C87DBE

_ a5Rd5CCFD
G7BBCDBD3G7C87DC7

_ a5Rd5CCFE
G7BBCDBB3G7C87DBG

_ a5Sd5CCCC
A998E83G7AAB7AC

_ a5Sd5CCCE
A998E93G7AAB7AD

_ a5Sd5CCFF
G7BEAF893G7C87DCB

_ a5Sd5CCFG
G7BEAF883G7C87DCA

_ a5Zd5>A>F
G7AABG8C

_ a5Zd5>A>G
G7AABG8D

_ a5Zd5CCEC
G7AAB7EC3G7BBC8AE

_ a5dP59AF8
AC9BCF3G7BBCCDC

_ a5dP59AF>
AC9BCE3G7BBCCE8

_ a5dP5AEEG
G799ABCD

_ a5dP5AF9A
G7AABG9C

_ a5dP5B8GB
BBB8CA3G7AEAEE8

_ a5dP5BBC9
7B79GB93G7BBE8CD

_ a5dP5BC99
G7ABAFBE

_ a5dP5DEAB
AC78BE3G7BBCD9C

_ a5dP5EGDF
G7ABAA7C

_ a5eQ5989AE
G7BGE8GE

_ a5eQ5CD98
7B9A78E

_ a5eQ5EGED
G97ACC

_ a5h a58CDF
AC979F3G7BBCDE7

_ a5h a58CDG
AC979G3G7BBCDDG

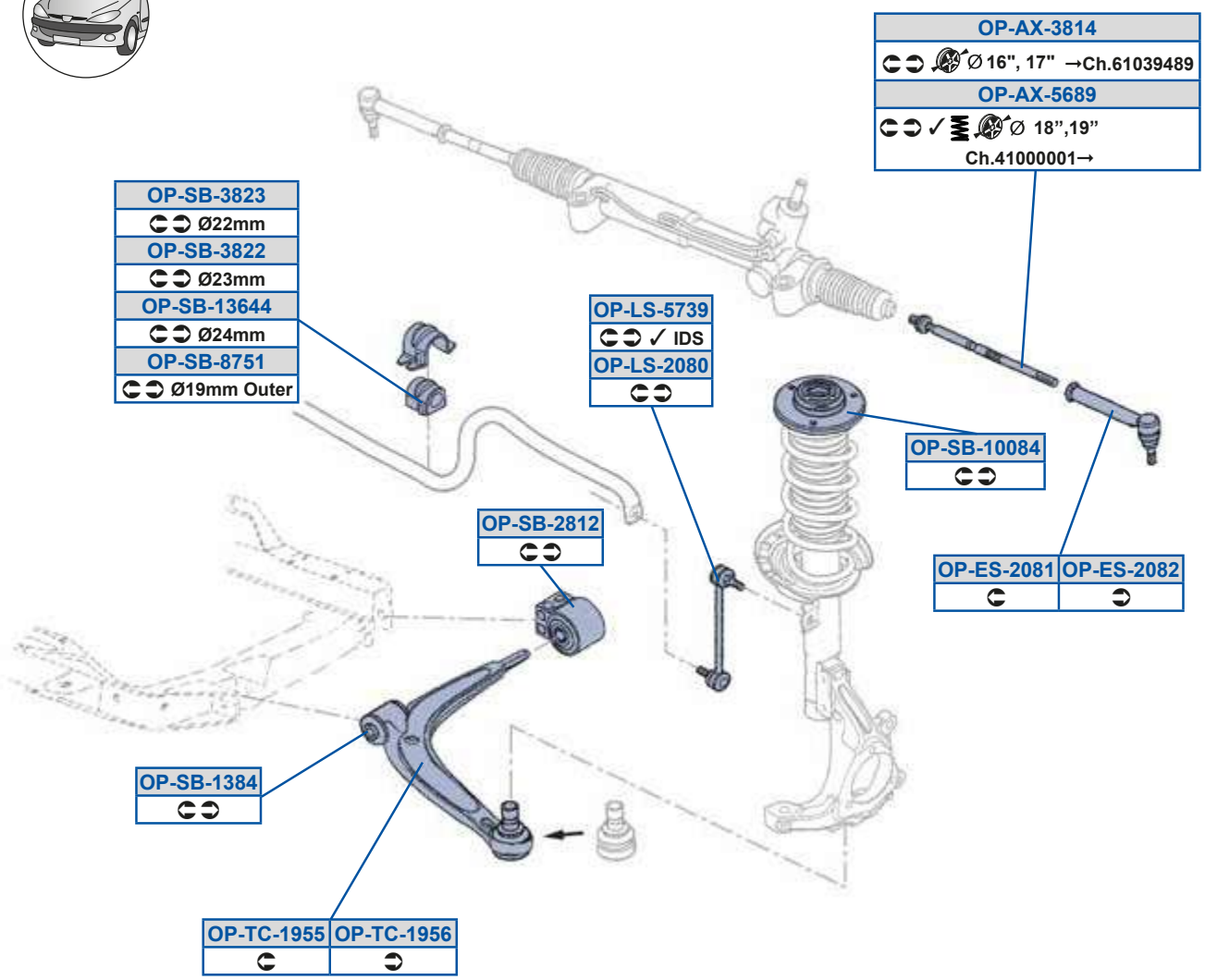
OP-AX-3814
Ø 16", 17" →Ch.61039489
OP-AX-5689
✓ Ø 18",19"
Ch.41000001→
OP-SB-3823
Ø22mm
OP-SB-3822
Ø23mm
OP-SB-13644
Ø24mm
OP-SB-8751
Ø19mm Outer
OP-LS-5739
✓ IDS
OP-LS-2080
OP-SB-10084
OP-SB-2812
OP-ES-2081
OP-ES-2082
OP-SB-1384
OP-TC-1955
OP-TC-1956

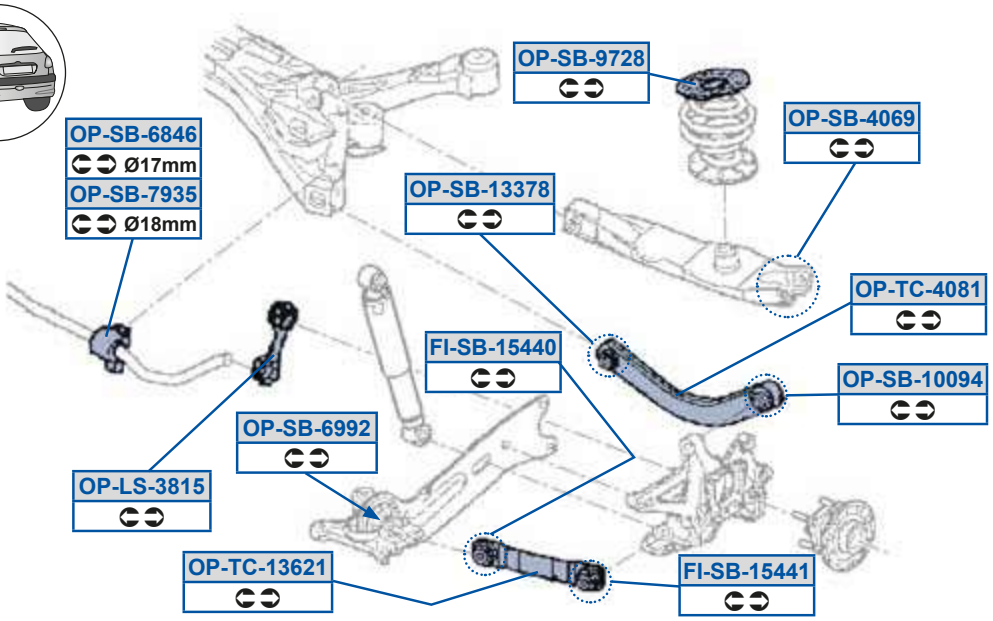
OP-SB-9728
OP-SB-4069
OP-SB-6846
Ø17mm
OP-SB-7935
Ø18mm
OP-SB-13378
OP-TC-4081
FI-SB-15440
OP-SB-10094
OP-SB-6992
OP-LS-3815
OP-TC-13621
FI-SB-15441

MOOG

TW6dP59CBB8
8A97B889 /4C39BB9FCBF /40

_ a5Zd5CEAG
8A88DAA93AC7D89

_ a5dP5AF>A
8A8A89A839BBD7FA9

_ a5eQ59GCC
9BB8A78C

TW6dP59CBB9
8A97B889 /4C39BB9FCBF /40

_ a5dP5988FB
8A8FFEDA

_ a5dP5B8DG
9BBDGDBA3B9AA97

_ a5eQ59GCD
9BB8A78D

_ a5Oi 5AF9B
GA8ECC973GA8FEBAB

_ a5dP5988GB
8AA979ED

_ a5dP5DFBD
9BBCEAFC3BBB8D7

_ a5eQ5B8F9
8A87CEBB38A97B88C

_ a5Oi 5CDFG
GA8EF8D73GA8FEBAC

_ a5dP59AAEF
8A87CEBB /4C38A97B88C /40

_ a5dP5DGG>
9BBC97AB

_ a5Sd5>8F9
GA8E99CB

_ a5dP59ADBB
8A97B7E8

_ a5dP5EGAC
BBB8D8

_ a5Sd5>8F>
GA8E99CC

_ a5dP59AFB
AC9ACE3AC9ADB

_ a5dP5FEC9
BBB8D9

_ a5Zd5>8F8
8A9AE8A739BB8E9C8

_ a5dP5>F9>
GA8E8BBF

_ a5dP5GE>F
87ADACCD

_ a5Zd5AF9C
8A87B897

_ a5dP5AF>>
8A8A89A9

_ a5eQ59AD>9
8A97B889

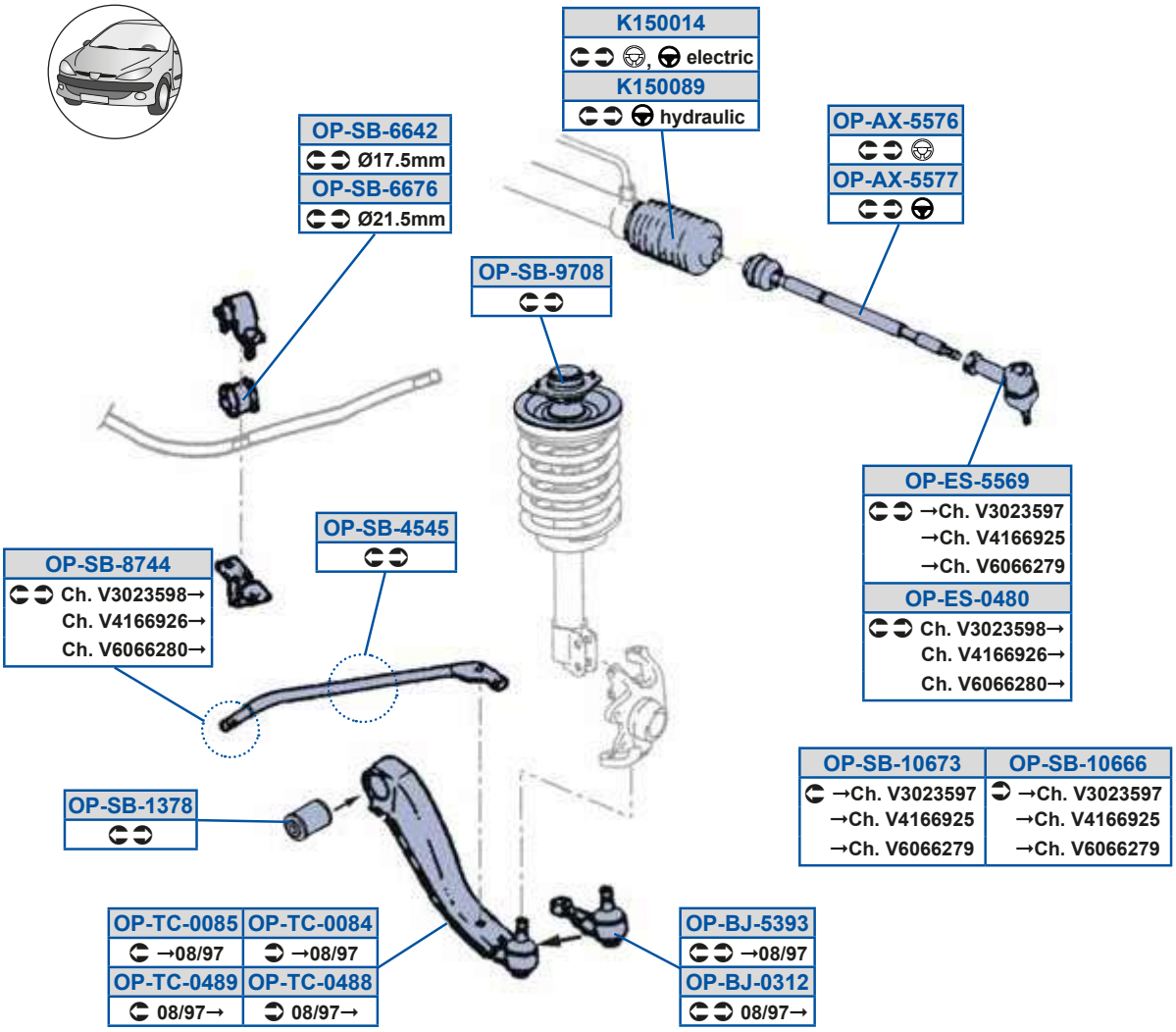
K150014
electric
K150089
hydraulic
OP-SB-6642
Ø17.5mm
OP-SB-6676
Ø21.5mm
OP-AX-5576
OP-AX-5577
OP-SB-9708
OP-ES-5569
→Ch. V3023597
→Ch. V4166925
→Ch. V6066279
OP-ES-0480
Ch. V3023598→
Ch. V4166926→
Ch. V6066280→
OP-SB-4545
OP-SB-8744
Ch. V3023598→
Ch. V4166926→
Ch. V6066280→
OP-SB-10673
→Ch. V3023597
→Ch. V4166925
→Ch. V6066279
OP-SB-10666
→Ch. V3023597
→Ch. V4166925
→Ch. V6066279
OP-SB-1378
OP-TC-0085
→08/97
OP-TC-0084
→08/97
OP-TC-0489
08/97→
OP-TC-0488
08/97→
OP-BJ-5393
→08/97
OP-BJ-0312
08/97→

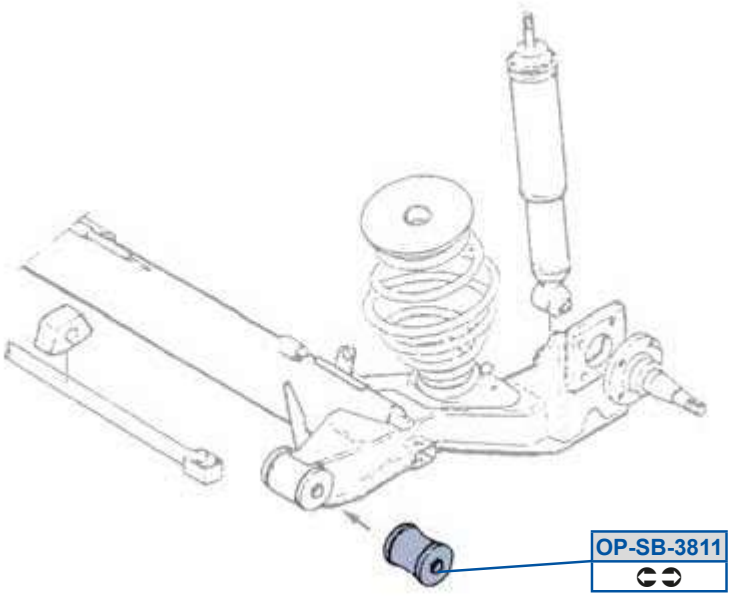
OP-SB-8745
OP-SB-3811

Y9C889B
7G79F9D39D78779G

_ a5dP598DDD
ACA9F73G7BBC878

_ a5dP5FEBC
9BBBAF8C3CB79DAD

Y9C88FG
9D7A99FD

_ a5dP598DEA
ACA9F83G7BBC877

_ a5dP5GE8F
887B97883A89C7A

_ a5Oi 5CCED
9D7A7B883A998CC

_ a5dP59AEF
AC9A783G7BBC7GE

_ a5eQ588FB
AC97793G78DDAG8

_ a5Oi 5CCEE
9D7A99FB

_ a5dP5AF99
G798EFBC

_ a5eQ588FC
AC977A3G78DDAG7

_ a5PX58A9>
8D7A9793G7CAGFGD

_ a5dP5BCBC
7ACACD83ACACD8

_ a5eQ58BFF
AC97893G7CB9CEA

_ a5PX5CAGA
8D7A89F38D7A8D8

_ a5dP5DDB>
AC787G3G78DFD79

_ a5eQ58BFG
CAC97883G7CB9CE9

_ a5Sd58BF8
9D7DC9DC3GA8G9BBD

_ a5dP5DDED
AC789E3G7BBEGBD

_ a5Sd5CCDG
9D788G9C39D7FEFDF

_ a5dP5FEBB
ADACD93G7CAG7CE

eWcO e é e Ó 8B1	8D78B 8F78G		

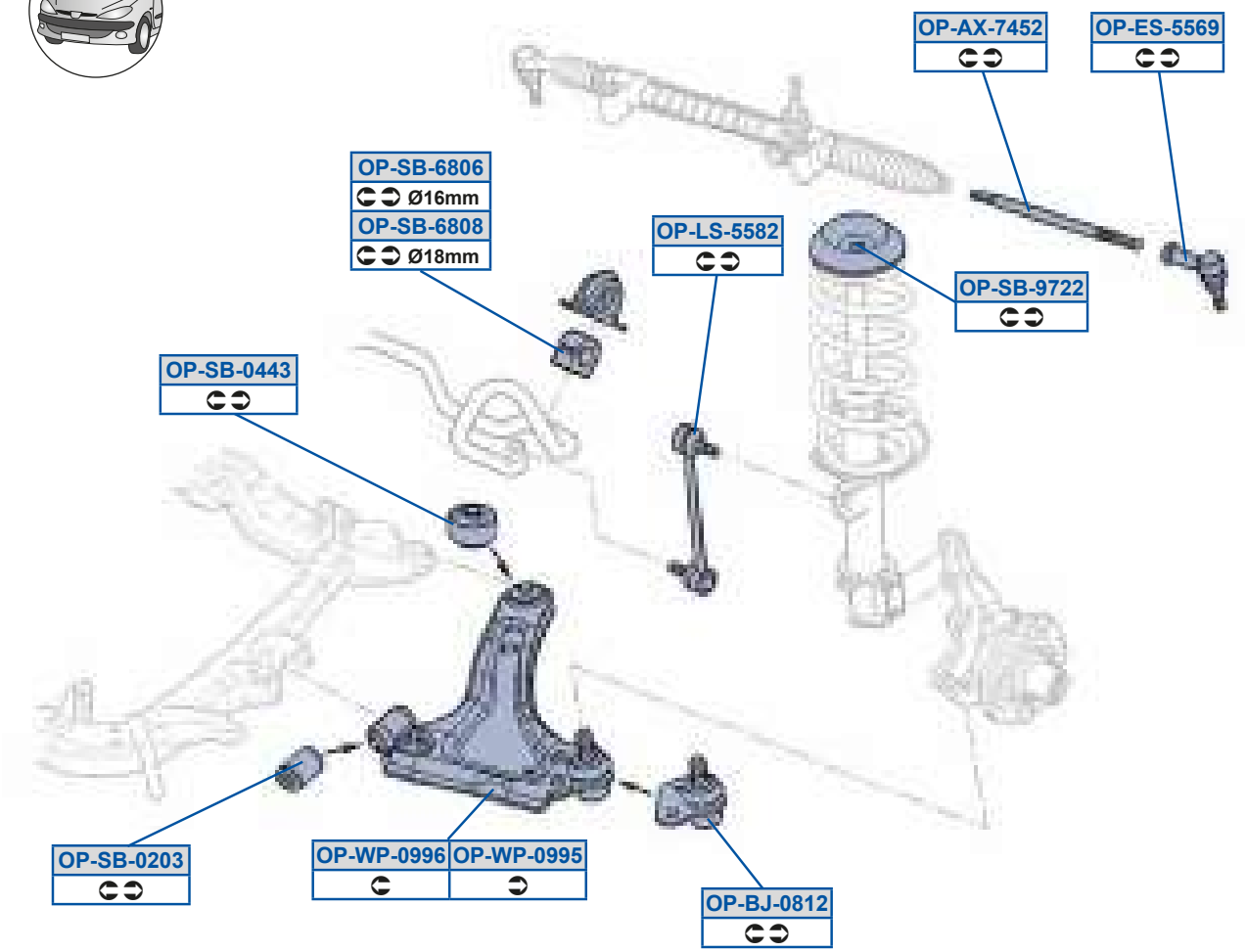

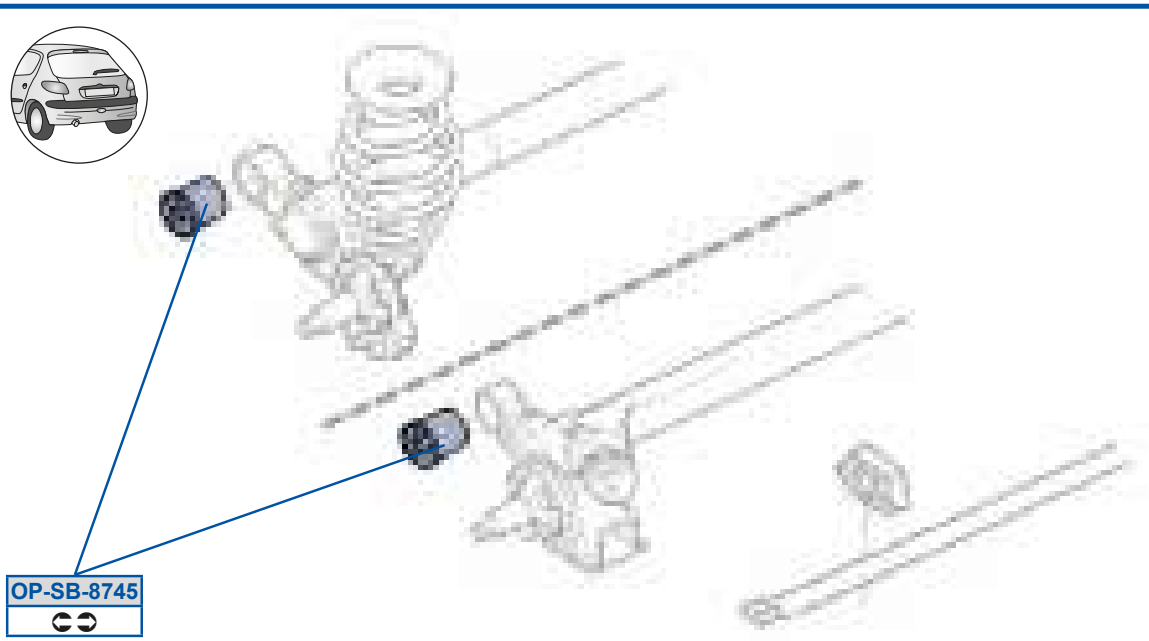

gOf i VOZZ

MOOG

_ a5Oi 5EBC>
9D887BA83GA8G9B8F

_ a5dP5FEBC
9BBBAF8C3CB79DAD

_ a5PX58F9>
AC9F7A3G8GDAGB

_ a5dP5GE>>
ABBC9A3G7BDFCCB

_ a5Sd5OCDG
9D788G9C39D7FEFDF

_ a5h a58GGC
8A8B77AF38A8B77B7

_ a5Zd5OCF>
AC7D873G7BGD88D

_ a5h a58GGD
8A8B77AE38A8B77AG

_ a5dP58>8A
G8GGCED3G8GGGD8

_ a5dP58BBA
8A8AF8C839BBA787A

_ a5dP5DF8D
AC78A73G7BDFCDE

_ a5dP5DF8F
G7CAFFDC

gOf i VOZZ

gSQec0 OP1OKGD1	8F7GC 8A78;	gSQec0 OP1S t x OKGD1	8F7GC 8A78;
gSQec0 OP1Vt vÉut v OKGD1	8F7GC 8E78A		

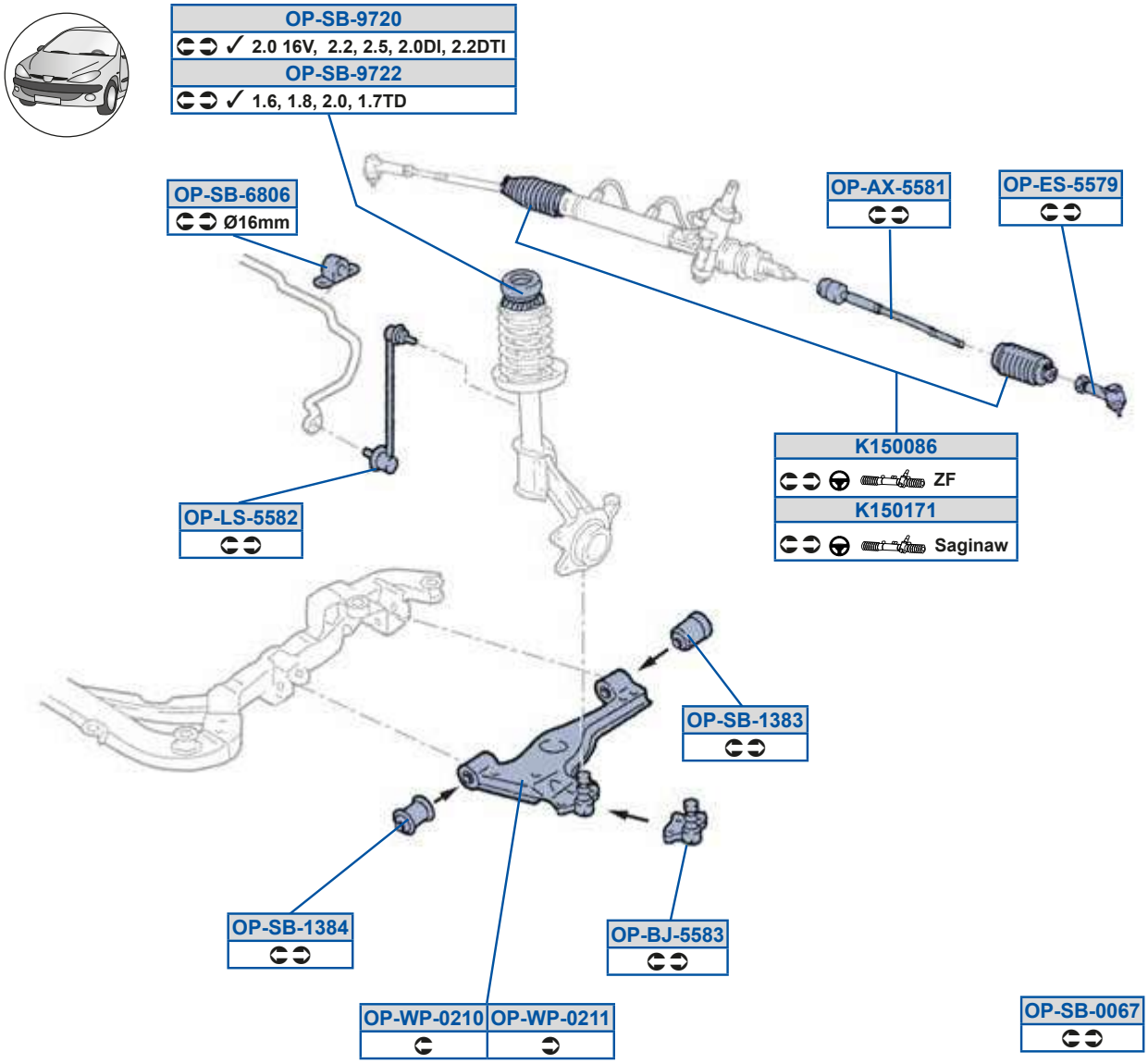

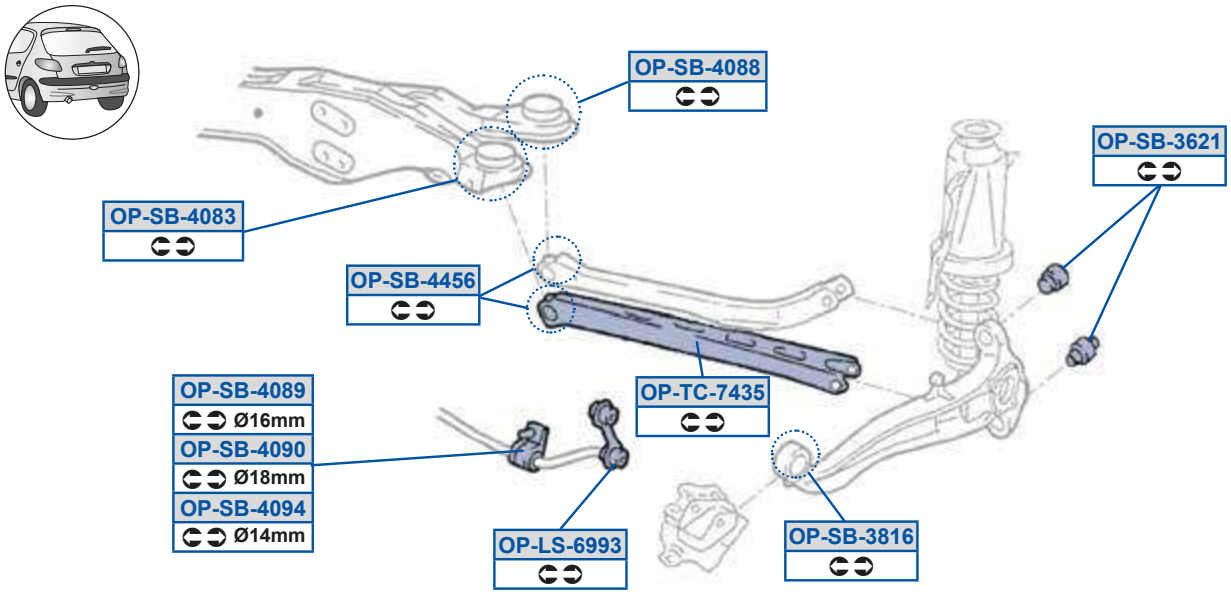

MOOG

Y9C88FD
8D7G7GC3G7C89EEF

_ a5dP59AFA
AC99ACF3G7BDFDAF

_ a5dP5B8GB
BBB8CA3G7AEAEE8

Y9C89E9
8D7G7GD39D7CC997

_ a5dP59AFB
AC9ACE3AC9ADB

_ a5dP5BBCD
7B9AA8D3G7BGDDFD

_ a5Oi 5CCF9
9D7CC98G3G7BGF8F8

_ a5dP5AD>9
G7BGDE77

_ a5dP5DF8D
AC78A73G7BDFCDE

_ a5PX5CCFA
G7BFECD83G7C89GF9

_ a5dP5AF9D
G7BGCCFC3G8G8A7G

_ a5dP5GE>8
7ABBC9C

_ a5Sd5CCEG
G7C89EEC3GA8FDA98

_ a5dP5B8FA
CB79DA7

_ a5dP5GE>>
ABBC9A3G7BDFCCB

_ a5Zd5CCF>
AC7D873G7BGD88D

_ a5dP5B8FF
CB79DA8

_ a5eQ5EBAC
G7CAFBBB

_ a5Zd5DGGA
BBB9G83G7BGDE88

_ a5dP5B8FG
BBB977

_ a5h a58>98
CAC977C3G7BGD7AG

_ a5dP588DE
A799F7

_ a5dP5B8G8
BBB978

_ a5h a58>99
CAC977B3G7BGD7B7

gOf i VOZZ

gSQec0 [WWQ1Ol 8; 1	89788	9878F	gSQec0 [WWQ1S t x Ol 8; 1	9878A	8C78G
gSQec0 [WWQ1Ued Ol 8; 1	8F78;	8E78F			

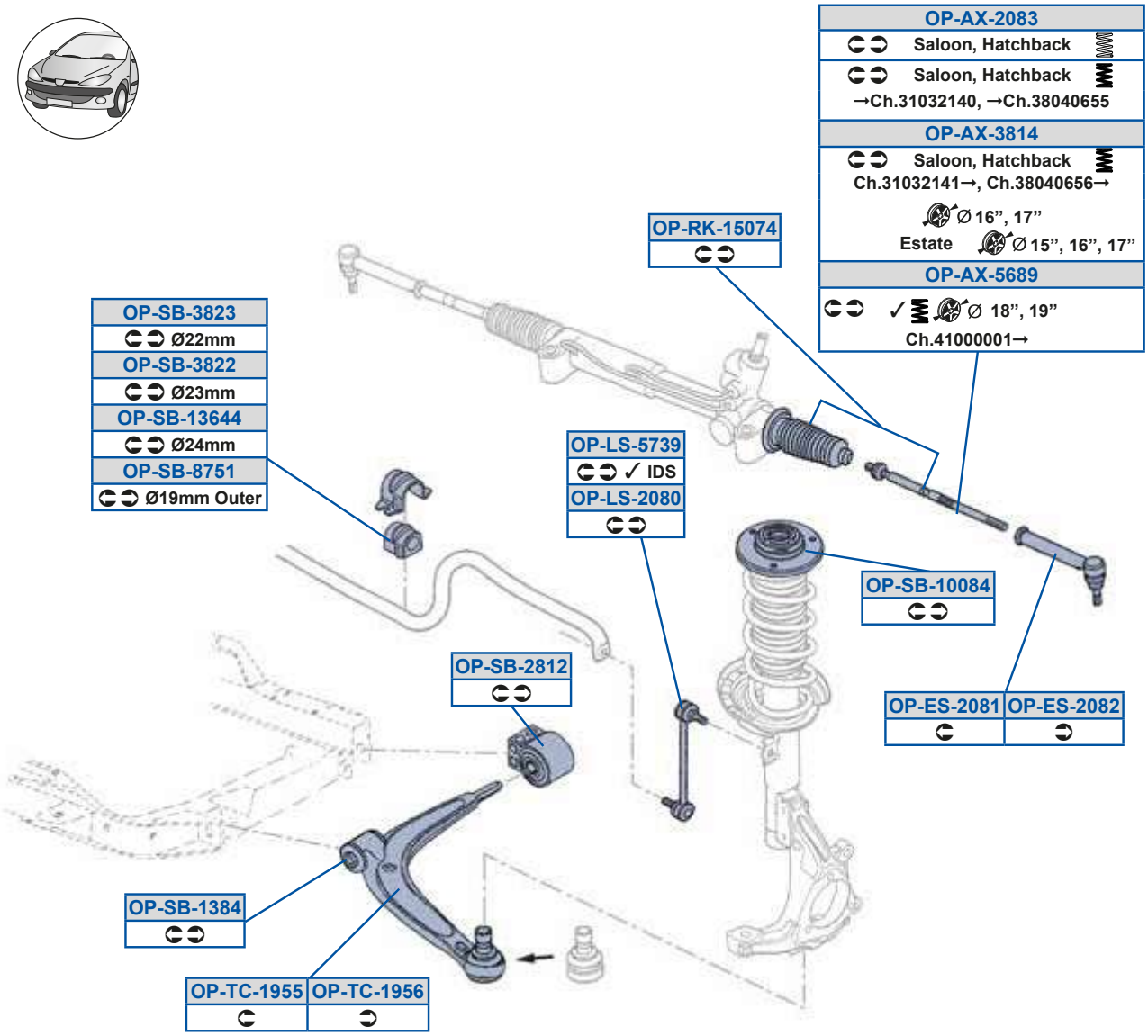

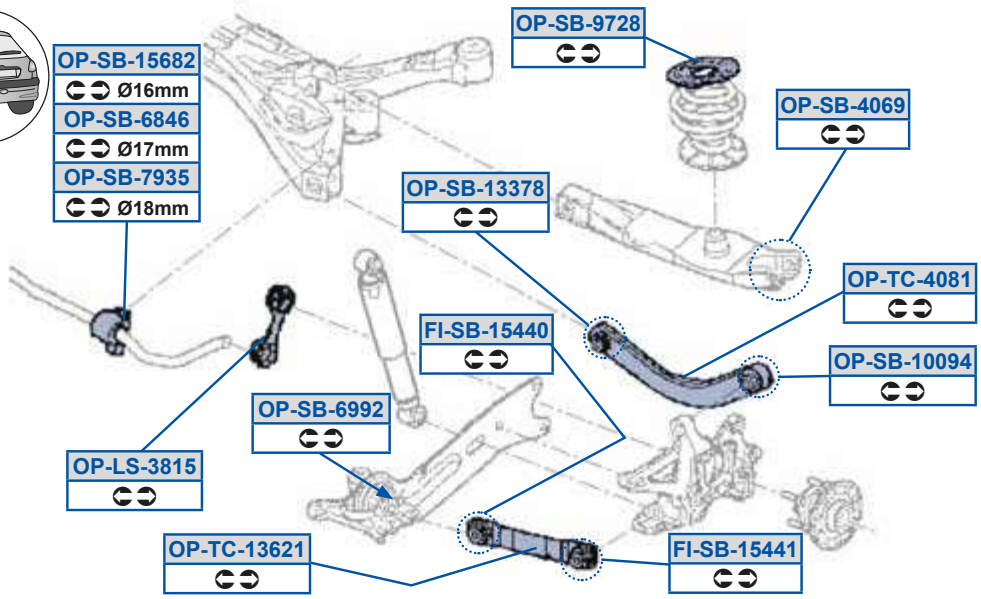

MOOG

TW6dP59CBB8
8A97B889 /4C39BB9FCBF /40

_ a5Zd5AF9C
8A87B897

_ a5dP59CDF>
8A8A8GDA3BB8DA

_ a5dP5FEC9
BBB8D9

TW6dP59CBB9
8A97B889 /4C39BB9FCBF /40

_ a5Zd5CEAG
8A88DAA93AC7D89

_ a5dP5>F9>
GA8E8BBF

_ a5dP5GE>F
87ADACCD

_ a5Oi 5>8FA
GA8E99CD3GA8FED9D

_ a5cY59C8EB
GA8E99CD3GA8FED9D

_ a5dP5AF>>
8A8A89A9

_ a5eQ59AD>9
8A97B889

_ a5Oi 5AF9B
GA8ECC973GA8FEBAB

_ a5dP5988FB
8A8FFEDA

_ a5dP5AF>A
8A8A89A839BBD7FA9

_ a5eQ59GCC
9BB8A78C

_ a5Oi 5CDFG
GA8EF8D73GA8FEBAC

_ a5dP5988GB
8AA979ED

_ a5dP5B8DG
9BBDGDBA3B9AA97

_ a5eQ59GCD
9BB8A78D

_ a5Sd5>8F9
GA8E99CB

_ a5dP59AAEF
8A87CEBB /4C38A97B88C /40

_ a5dP5DFBD
9BBCEAFC3BBB8D7

_ a5eQ5B8F9
8A87CEBB38A97B88C

_ a5Sd5>8F>
GA8E99CC

_ a5dP59ADBB
8A97B7E8

_ a5dP5DGG>
9BBC97AB

_ a5Zd5>8F8
8A9AE8A739BB8E9C8

_ a5dP59AFB
AC9ACE3AC9ADB

_ a5dP5EGAC
BBB8D8

gWOc_ P Ó FA1	8F789 8E79B	gWOc_ Q uéÓ FA1	8F789 8E79B
gWOc_ a t y 7QÉt é Ó FA1	8B78A 8E79B		

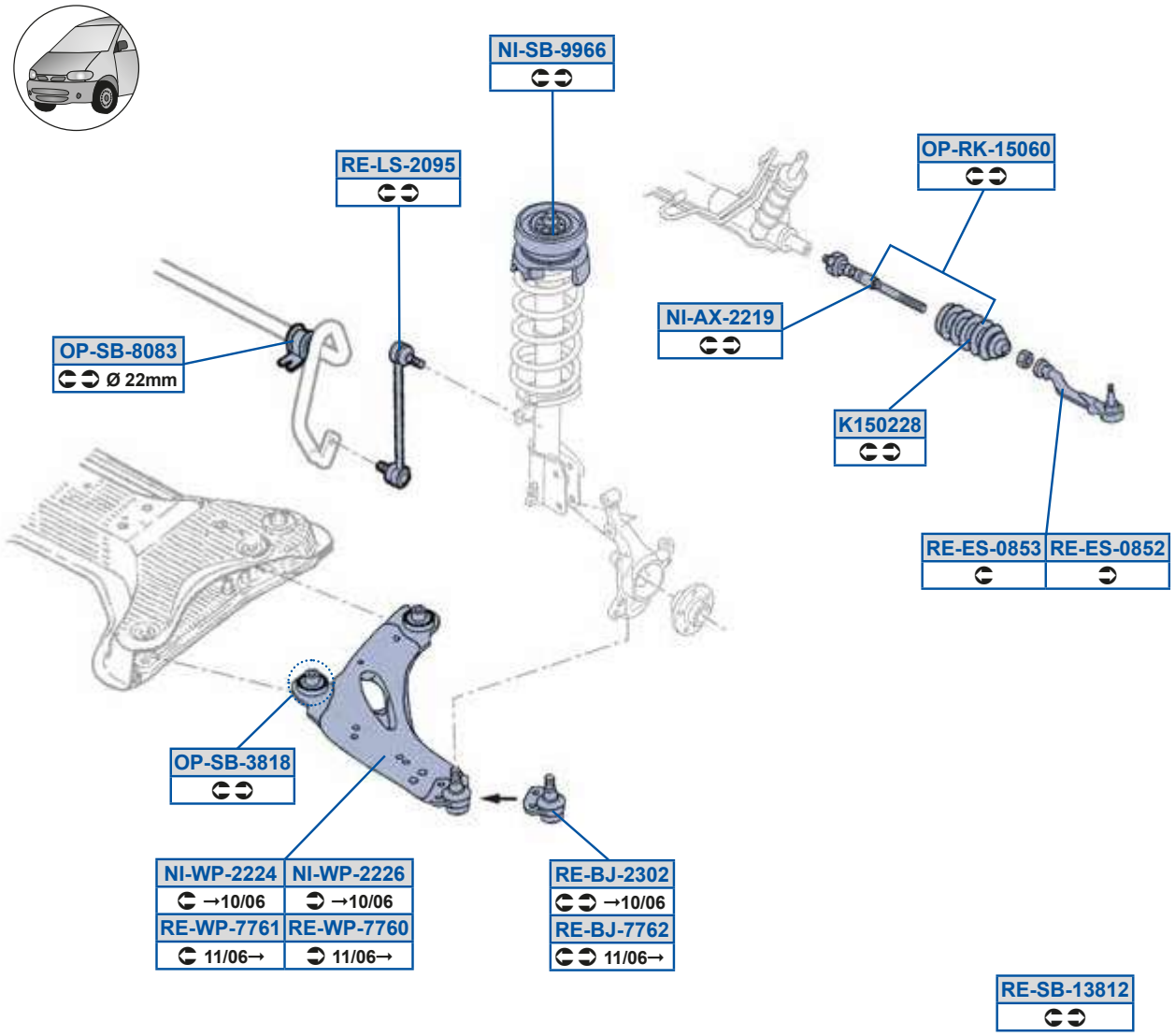

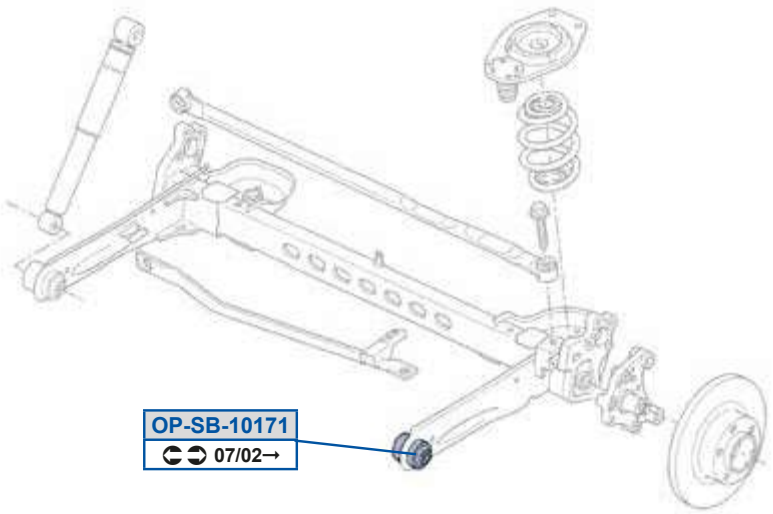

MOOG

Y9C8>>F
BB7FBED3G88D77AF

_ a5dP5F8FA
BB7FG7C

c S5h a5EED9
G88DDBD93GAFCABDB

] V6Oi 5>>9G
G88D77AE

c S5PX5>A8>
BB8G7EC3GA8GDG9A

] V6dP5GGDD
CBA9777I 003EE7897EBG8

c S5PX5EED>
GA8D8FFB

] V6h a5>>>B
G88DDBD93GAFC888E

c S5Sd58FC>
G88D77BB

] V6h a5>>>D
G88DDBD83GAFC888F

c S5Sd58FCA
G88D77BA

_ a5cY59C8D8
G88D77AE

c S5Zd5>8GC
G88DE7773GAFCFG8E

_ a5dP5989E9
G88DCE783GAFCDBEA

c S5dP59AF9>
F977D9DGDC

_ a5dP5AF9F
F9777BGD9B

c S5h a5EED8
GAFCABDC3GAFCFFDC

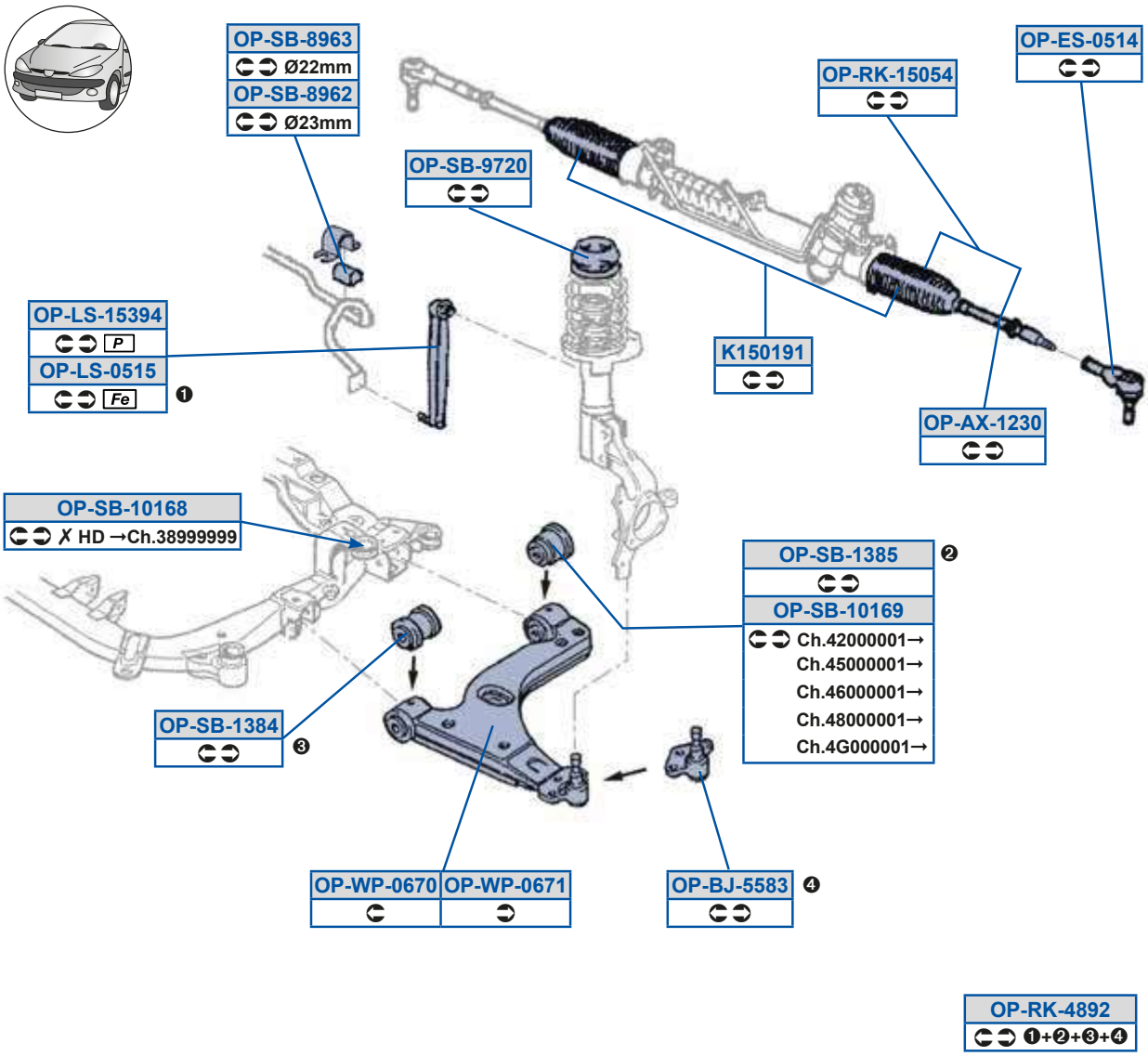
OP-SB-8963
Ø22mm
OP-SB-8962
Ø23mm
OP-ES-0514
OP-RK-15054
OP-SB-9720
OP-LS-15394
P
OP-LS-0515
Fe
❶
K150191
OP-AX-1230
OP-SB-10168
✗ HD →Ch.38999999
OP-SB-1385
❷
OP-SB-10169
Ch.42000001→
Ch.45000001→
Ch.46000001→
Ch.48000001→
Ch.4G000001→
OP-SB-1384
❸
OP-WP-0670
OP-WP-0671
OP-BJ-5583
❹
OP-RK-4892
❶+❷+❸+❹

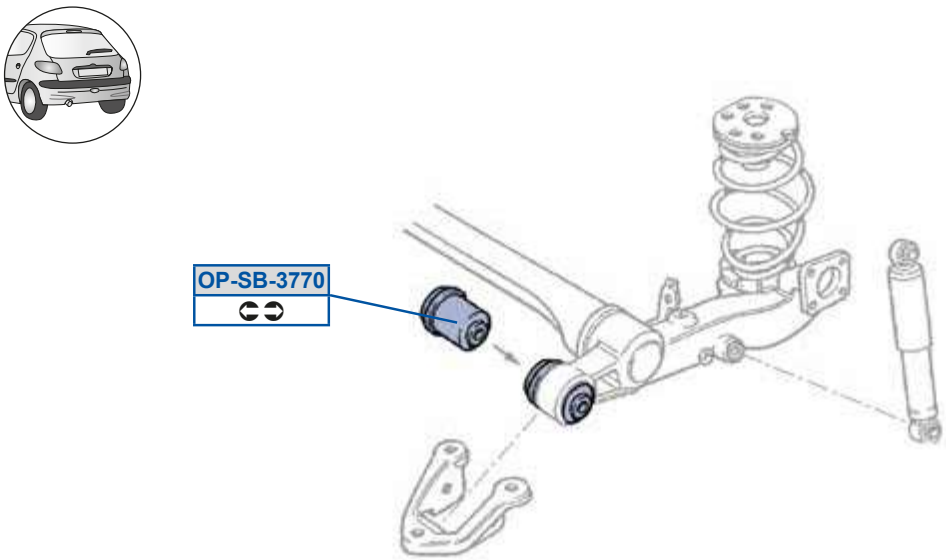
OP-SB-3770

MOOG

Y9C89G9
8D7G87G39D7CG9GC

_ a5dP5989DF
A799EC3A799G7

_ a5h a58DE8
CAC978D3G7BGFAEC

_ a5Oi 59>A8
9D7CG9GA3G88F89F

_ a5dP5989DG
8A87EA9F

_ a5h a58DE9
CAC978E3G7BGFAED

_ a5PX5CCFA
G7BFECD83G7C89GF9

_ a5dP59AFB
AC9ACE3AC9ADB

_ a5Sd58C9B
8D7A98B38D7A98C

_ a5dP59AFC
AC9ADC3G7BGFEB7

_ a5Zd58C9C
8A8DGBAG3AC7D88

_ a5dP5AEE8
7B79DBB3B79DBB

_ a5Zd59CAGB
AC78ED3AC7D88

_ a5dP5FGD>
AC77GA

_ a5c Y59C8CB
9D7CG9GA3G88F89F

_ a5dP5FGDA
G7CF8AGF

_ a5c Y5BFG>

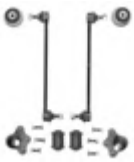

_ a5dP5GE>8
7ABBC9C

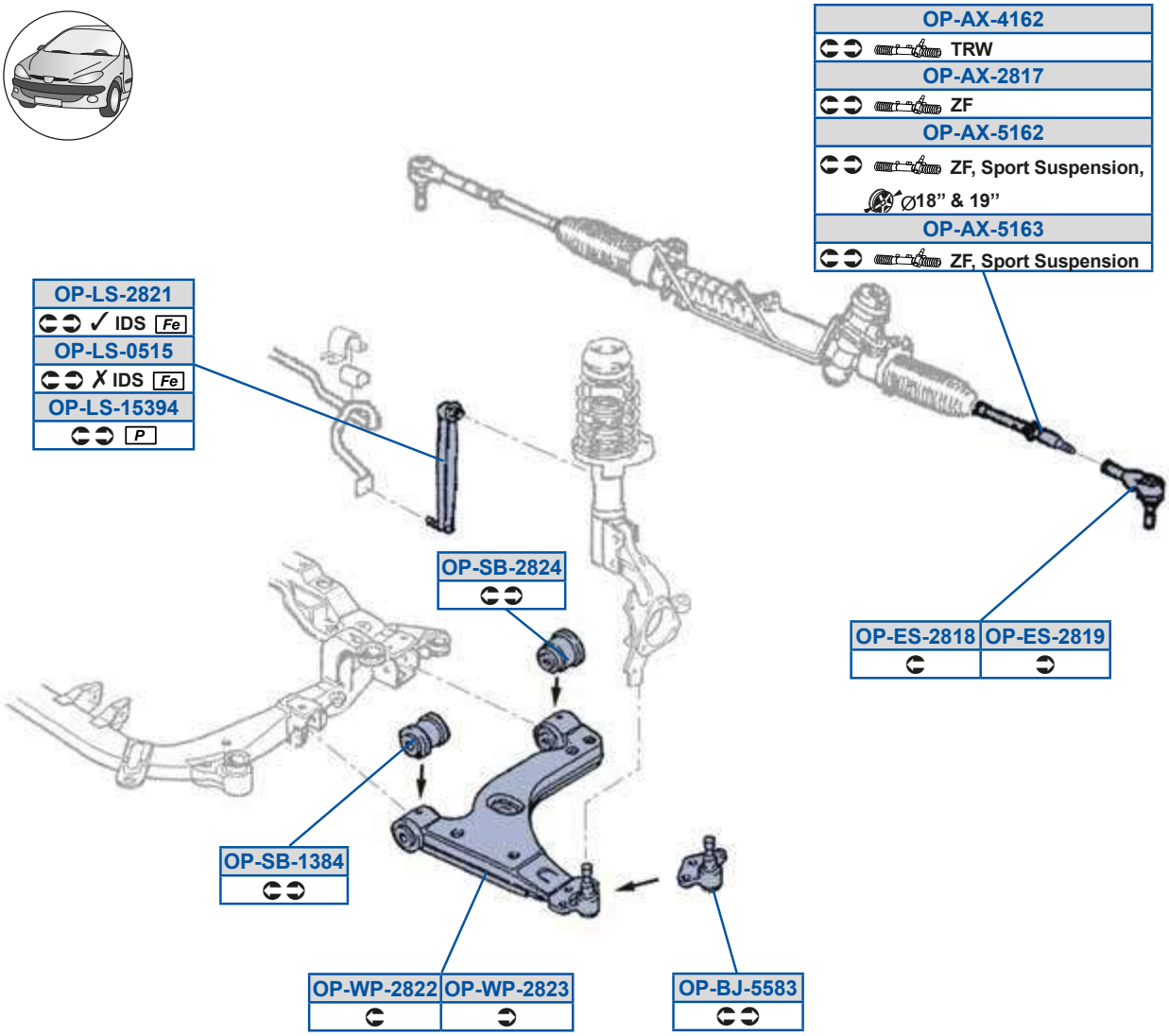
OP-AX-4162
TRW
OP-AX-2817
ZF
OP-AX-5162
ZF, Sport Suspension,
ø18" & 19"
OP-AX-5163
ZF, Sport Suspension
OP-LS-2821
✓ IDS Fe
OP-LS-0515
✗ IDS Fe
OP-LS-15394
P
OP-SB-2824
OP-ES-2818
OP-ES-2819
OP-SB-1384
OP-WP-2822
OP-WP-2823
OP-BJ-5583

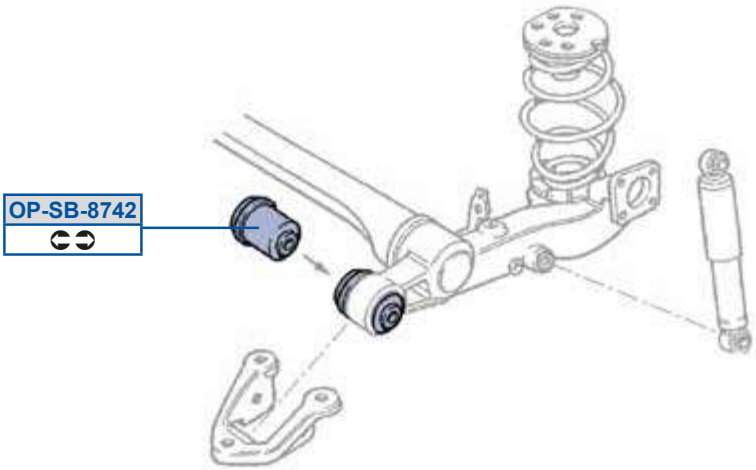
OP-SB-8742

_ a5Oi 5>F9E
GA8F899G3GA8FGDDF

_ a5Zd59CAGB
AC78ED3AC7D88

_ a5Oi 5B9D>
GA8FDAA73GA8FGBC8

_ a5Zd5>F>9
9BBD8ACA

_ a5Oi 5C9D>
GA8F8DD93GA8FGDE7

_ a5dP59AFB
AC9ACE3AC9ADB

_ a5Oi 5C9DA
GA8F89A73GA8FGDDG

_ a5dP5>F>B
9BBAGCF9

_ a5PX5CCFA
G7BFECD83G7C89GF9

_ a5dP5FEB>
8A887B8F38A9DE98C

_ a5Sd5>F9F
GA8EGCCG3GA8F89A9

_ a5h a5>F>>
9BBCBBEE

_ a5Sd5>F9G
GA8EGCCF3GA8F89AA

_ a5h a5>F>A
9BBCBBEF

_ a5Zd58C9C
8A8DGBAG3AC7D88

I OTWO [WWOa9; 1	98799		

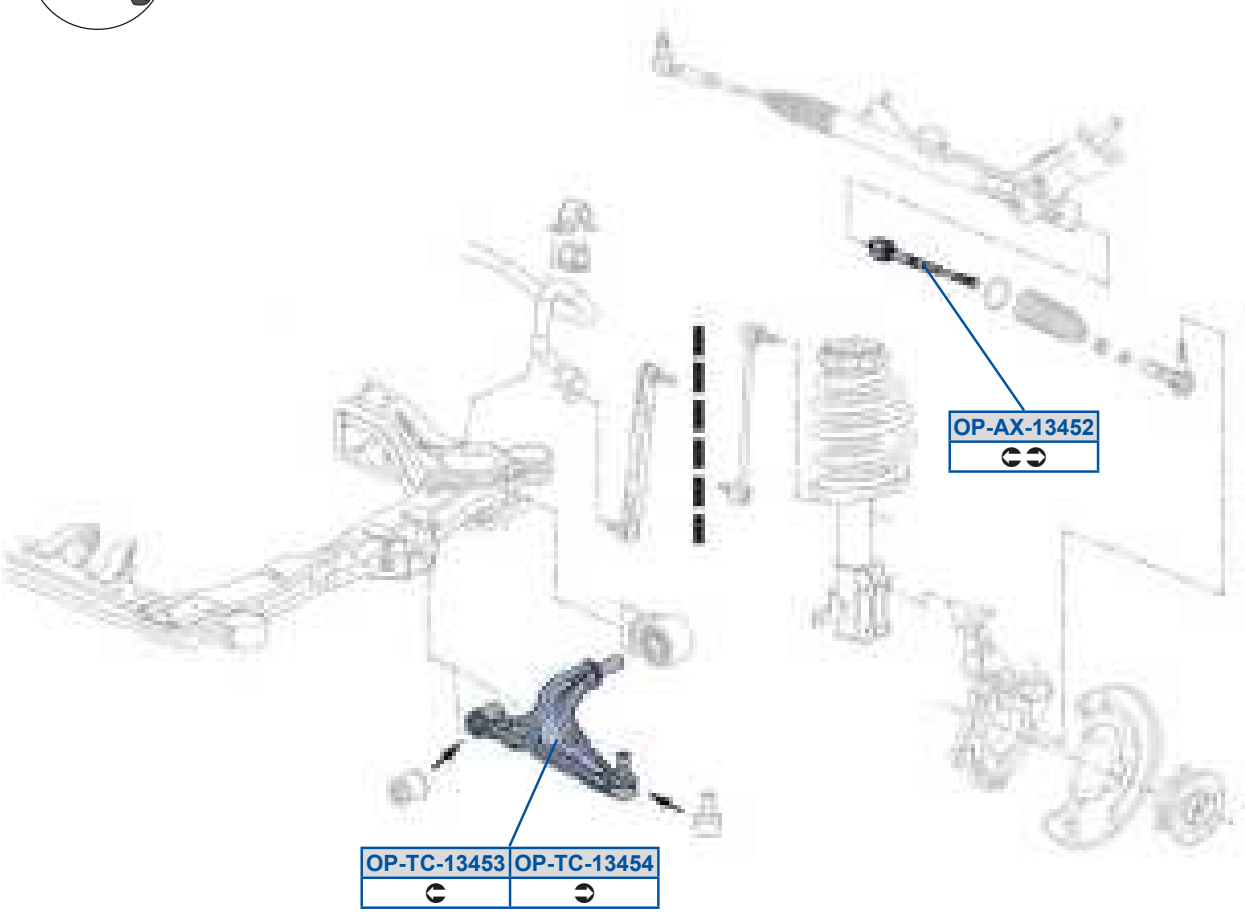

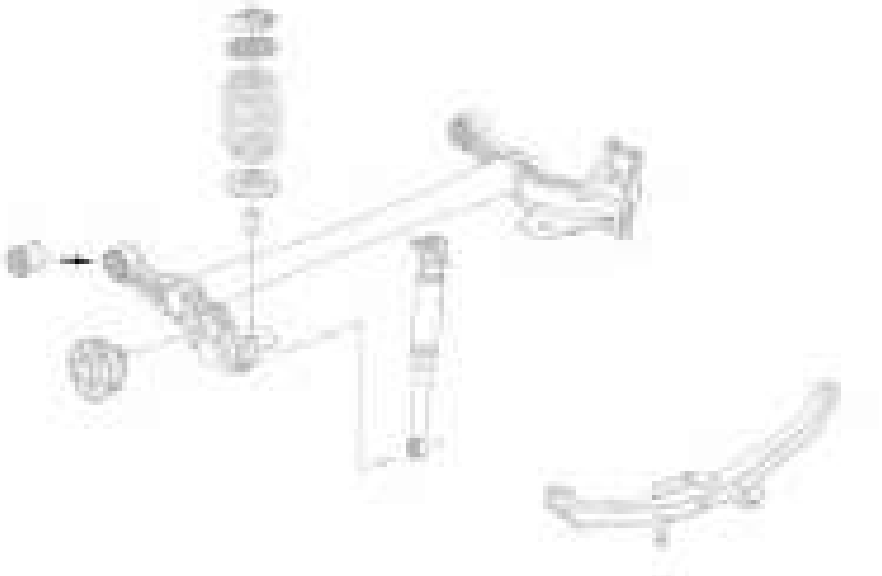

MOOG

_ a5Oi 59ABC>

8A9FDDFF38D7G8FB

_ a5eQ59ABCA

8AAE8F8D38ABD8G97

_ a5eQ59ABCB

8AAE8F8E3ABD8G98

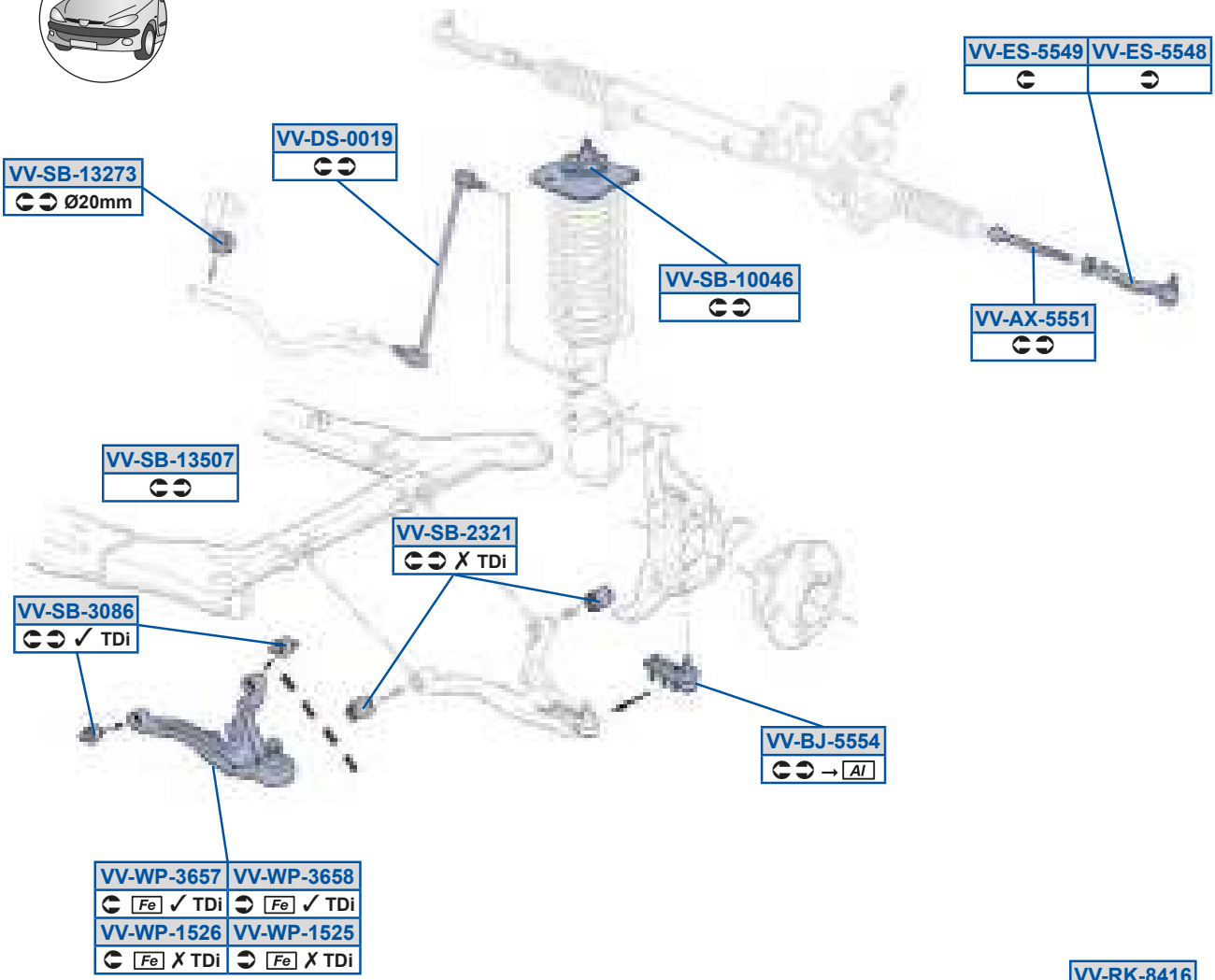
VV-ES-5549
VV-ES-5548
VV-DS-0019
VV-SB-13273
Ø20mm
VV-SB-10046
VV-AX-5551
VV-SB-13507
VV-SB-2321
✗ TDi
VV-SB-3086
✓ TDi
VV-BJ-5554
→ Al
VV-WP-3657
Fe ✓ TDi
VV-WP-3658
Fe ✓ TDi
VV-WP-1526
Fe ✗ TDi
VV-WP-1525
Fe ✗ TDi
VV-RK-8416
✗ TDi

VV-SB-10047
VV-LS-13272

gg5Oi 5CCC9
ACBD9DD3ACBD9DD9

gg5dP5988BE
AC8D8C83G8B7FBE

gg5PX5CCCB
9E8CG83ACBDC9B

gg5dP59A>EA
ACBDEA7

gg5Rd5889G
8AFEFD73A7DBEG98

gg5dP59AC8E
AC7EG9A

gg5Sd5CCBF
9E8CGG39E8CGGA

gg5dP5>A>9
9E8DA83DF779C8

gg5Sd5CCBG
99E8CGFC39E8CGF

gg5h a59C>C
9E8D9G39E8G79

gg5Zd59A>E>
AAC77C93AC8D899

gg5h a59C>D
9E8D9F39E8G78

gg5c Y5FB9D
9E8DA8

gg5dP5988BD
ACBD8FGD3FDABBCE

g_ Zg_

GB8 0GBB1	8F7G8	8A7GC	GB8 W0GBB1	8F7GB	987GF
GB8 WS t x 0GBC1	8F7GB	987GF	GB8 Y uéOGBC1	8F7G8	987GC
GD8 0GDB1	8F7G8	8E7GB	GD8 Y uéOGDC1	8F7G8	8E7GB

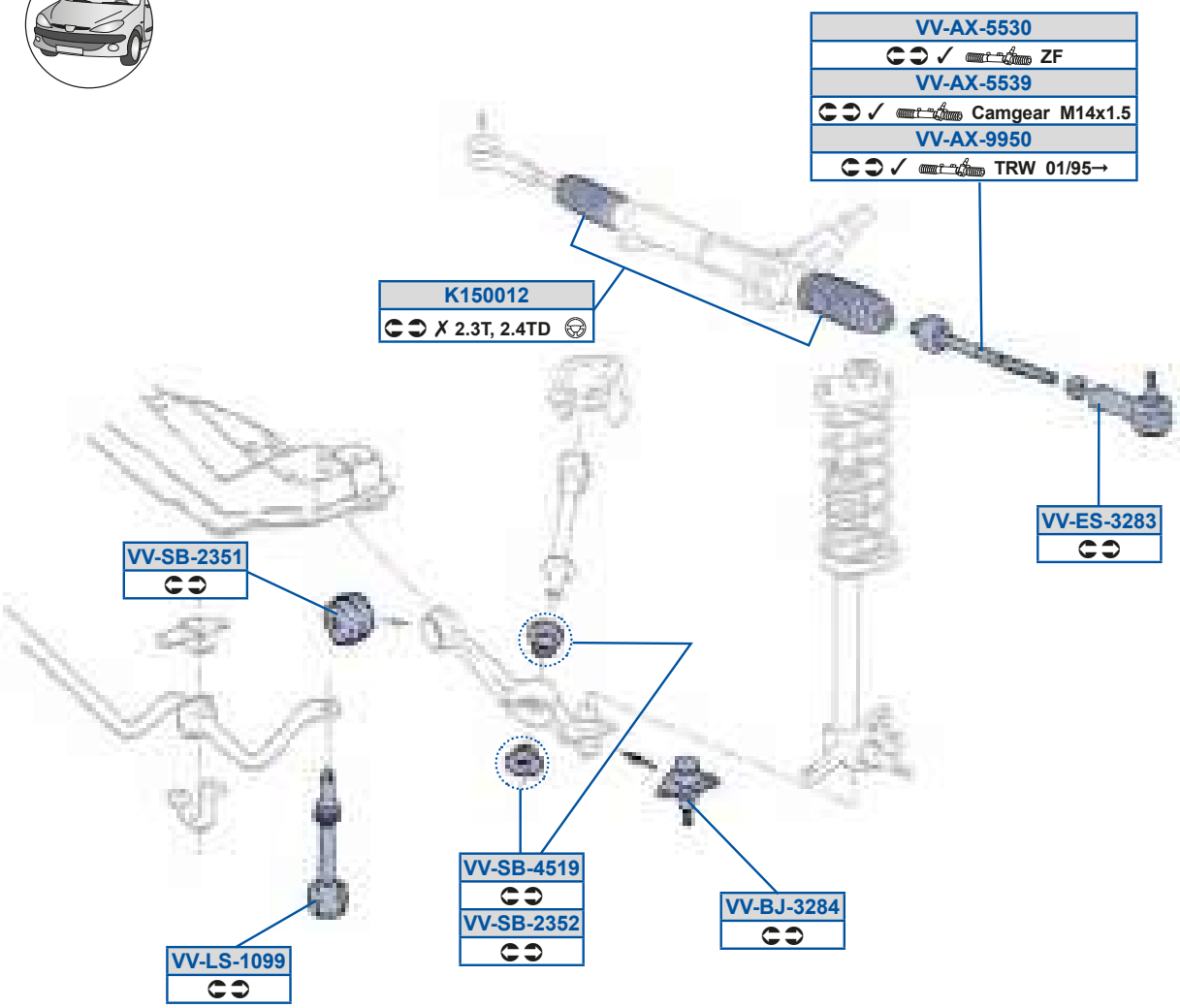

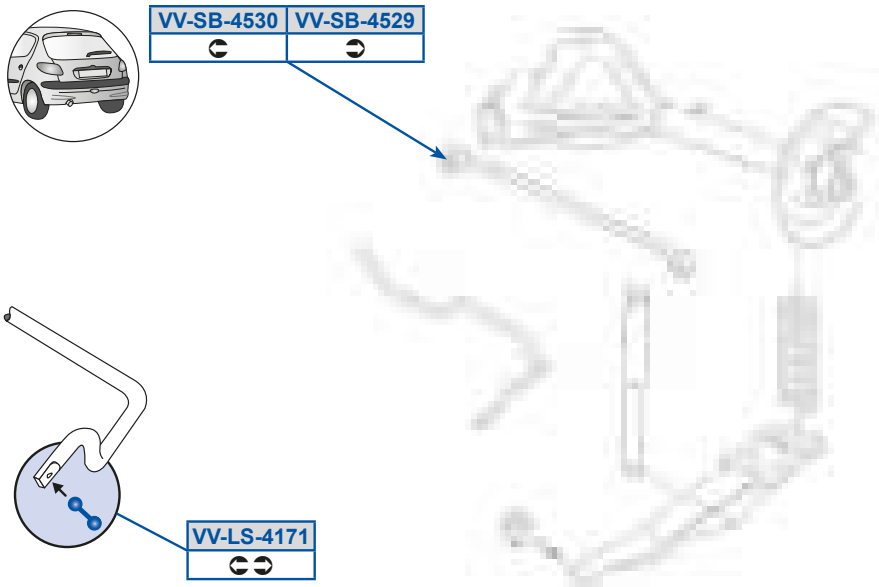

GB8 W WS 9879GGF15 GD8 WS 8E79GGB1

MOOG

Y9C889>
89E9G9B389E9G9C

gg5dP5>AC9
8A9GDCC

gg5Oi 5CCA8
8AFEACD39E8AFG

gg5dP5>AC>
899G9GE38ACGCGG

gg5Oi 5CCAG
8AFEBDA3G8B7C7B

gg5dP5BC9G
DF8G7CE

gg5Oi 5GGC8
G8B7EFF

gg5dP5BC>G
8AA7B9E

gg5PX5A>FB
899GCEA389E7BEE

gg5dP5BCA8
8AA7GEA

gg5Sd5A>FA
897CDCF38A9GDEC

gg5Zd598GG
899GAG83ACA79A7

gg5Zd5B9E9
ACA7A7BG

g_ Zg_

GD8 WOGDB1	8E7GB 9; 7GD	GD8 WOS t x OGDC1	8E7GB 9; 7GD
dG8 OGDB1	997GD 9; 7GF	gG8 S t x OGDC1	997GD 9; 7GF

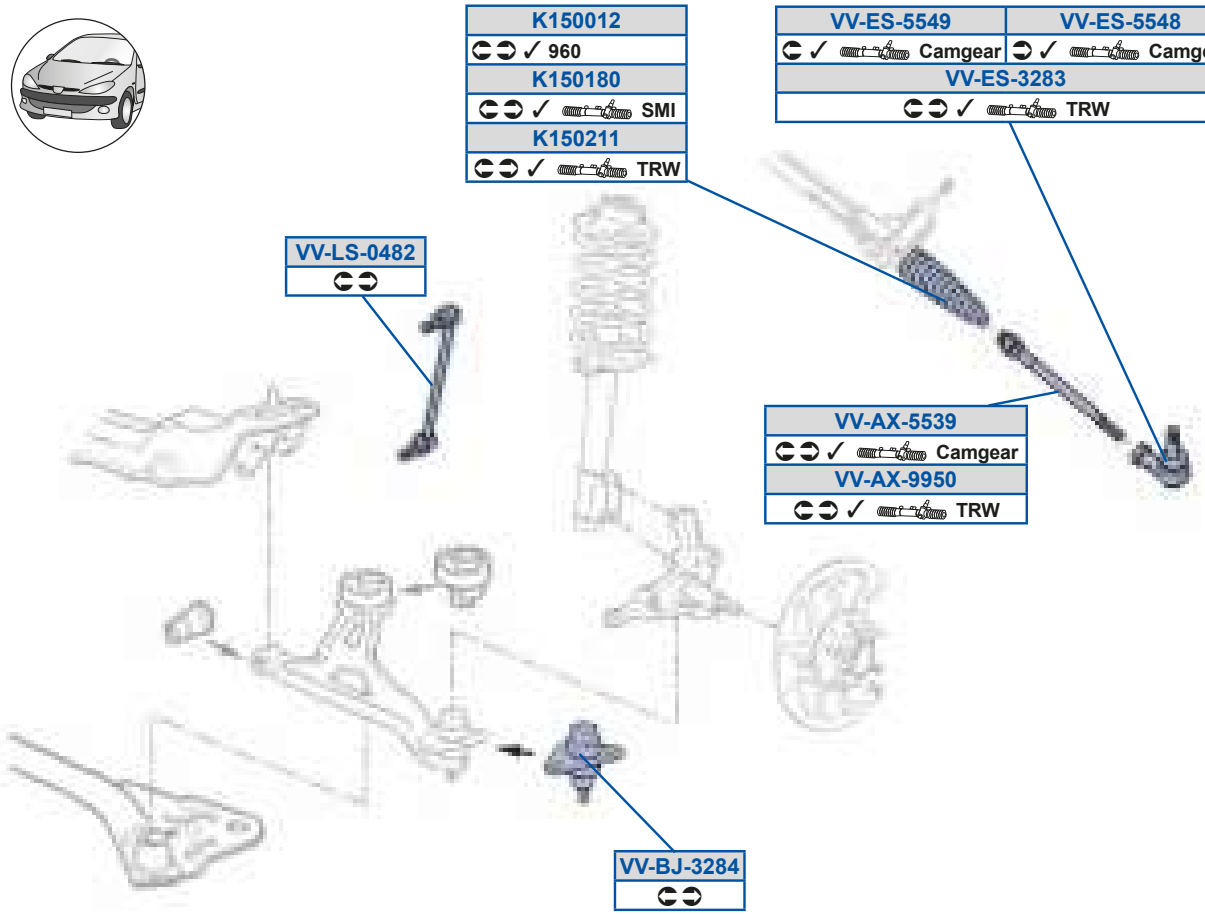

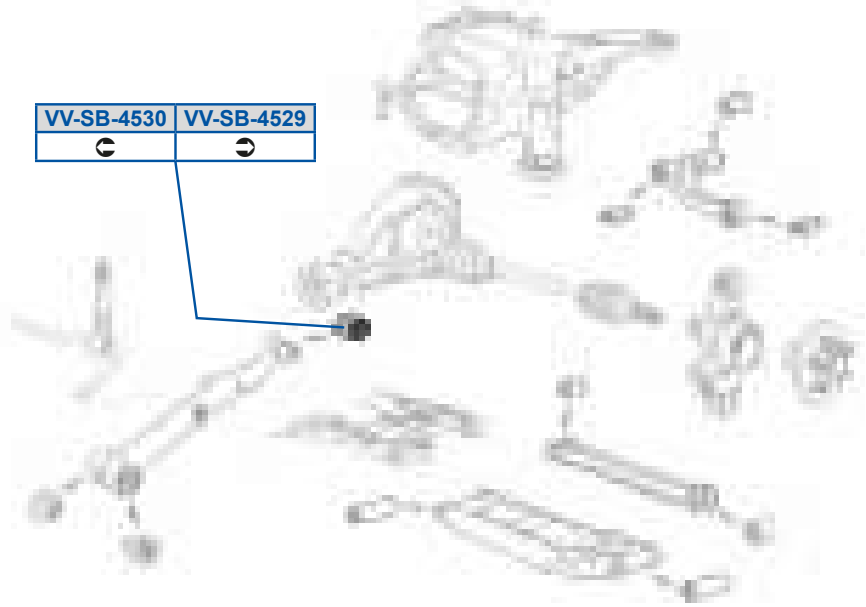

MOOG

Y9C889>
89E9G9B389E9G9C

Y9C89F8
G8G8B7G

Y9C8>99
9E8D78

gg5Oi 5OCAG
8AFEBDA3G8B7C7B

gg5Oi 5GGC8
G8B7EFF

gg5PX5A>FB
899GCEA389E7BEE

gg5Sd5A>FA
897CDCF38A9GDEC

gg5Sd5OCBF
9E8CGG39E8CGGA

gg5Sd5OCBG
99E8CGFC39E8CGF

gg5Zd58BF>
DF8G9CA3GBG9FAE

gg5dP5BC>G
8AA7B9E

gg5dP5BCA8
8AA7GEA

QA8 0CAA1

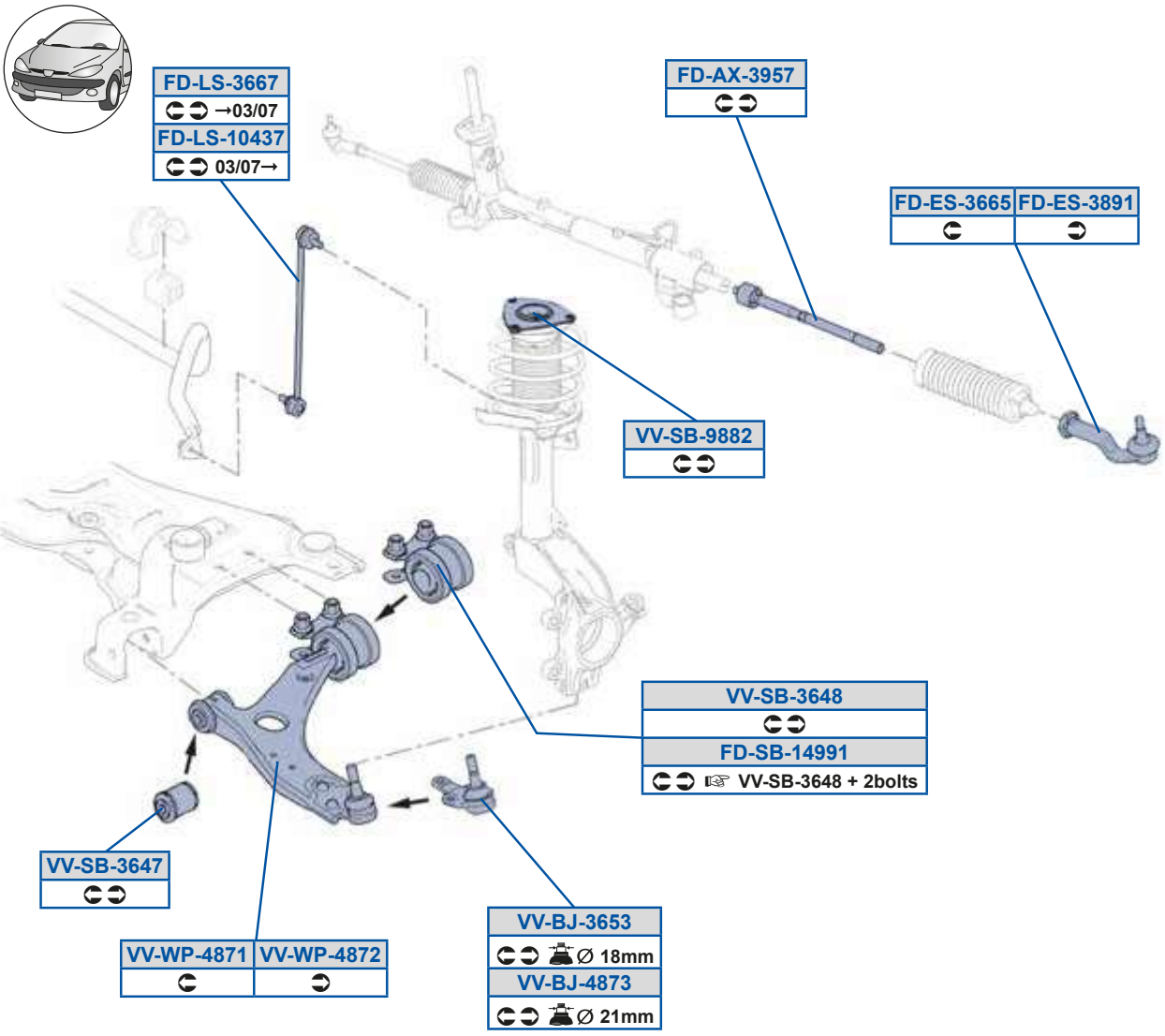

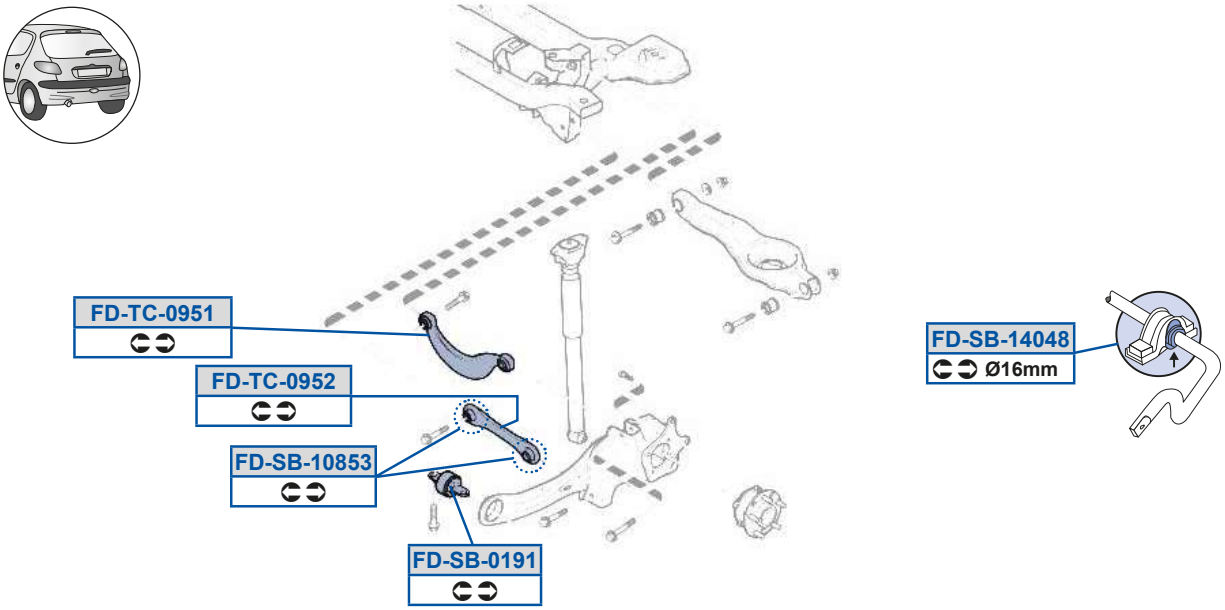

g_ Zg_

MOOG

TR5Oi 5AGCE
9EBC793A7EED9FA

TR5dP59BGG9
8BEEFCF3A7DEFBB7

gg5h a5BFE9
A7E8BB993A7EA7F9G

TR5Sd5ADDC
9EBC7739EBC78

TR5eQ58GC9
FDE8G98

gg5h a5BFE>
A7ED79EG3A89788F7

TR5Sd5AFG9
9EBC7739EBC78

TR5eQ58GC>
A7DFA7DE

TR5Zd598BAE
8C77DF93A7ED79AD

gg5PX5ADCA
89ABAF9

TR5Zd5ADDE
A8AB79EA3FD9ACED

gg5PX5BFEA
A89788F7 /40A89788F8 /40

TR5dP589G9
A7DDDF98

gg5dP5ADBE
A7E8B89F

TR5dP598FCA
87D8DDF /40

gg5dP5ADBF
A7DEFBB7

TR5dP59B8BF
A7DAGGD83A7DBEB8G

gg5dP5GFF>
A7DF8CBD

g_ Zg_

QE8 WAQ x éu x OCB; 1	8A78D 8D79A		

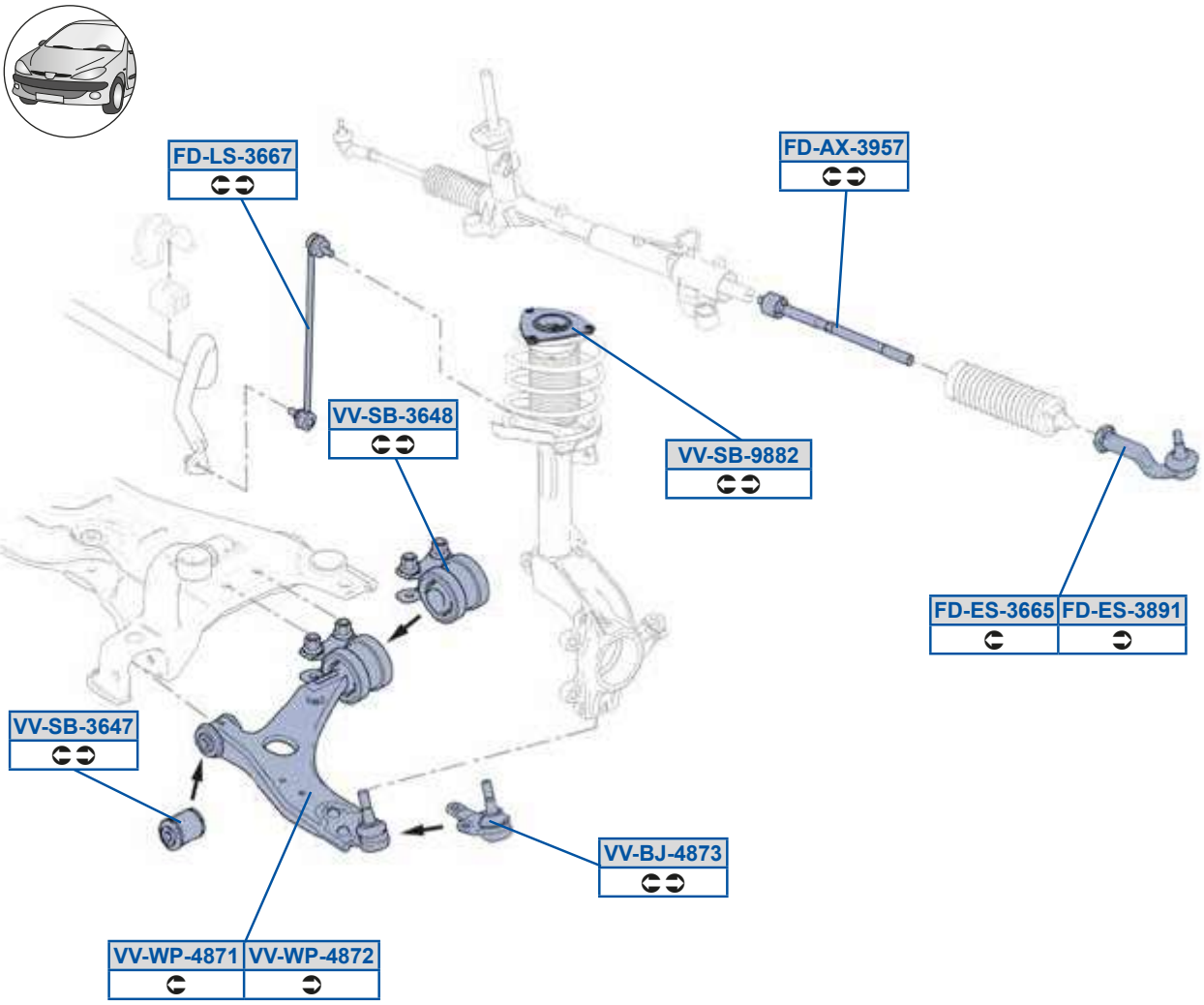

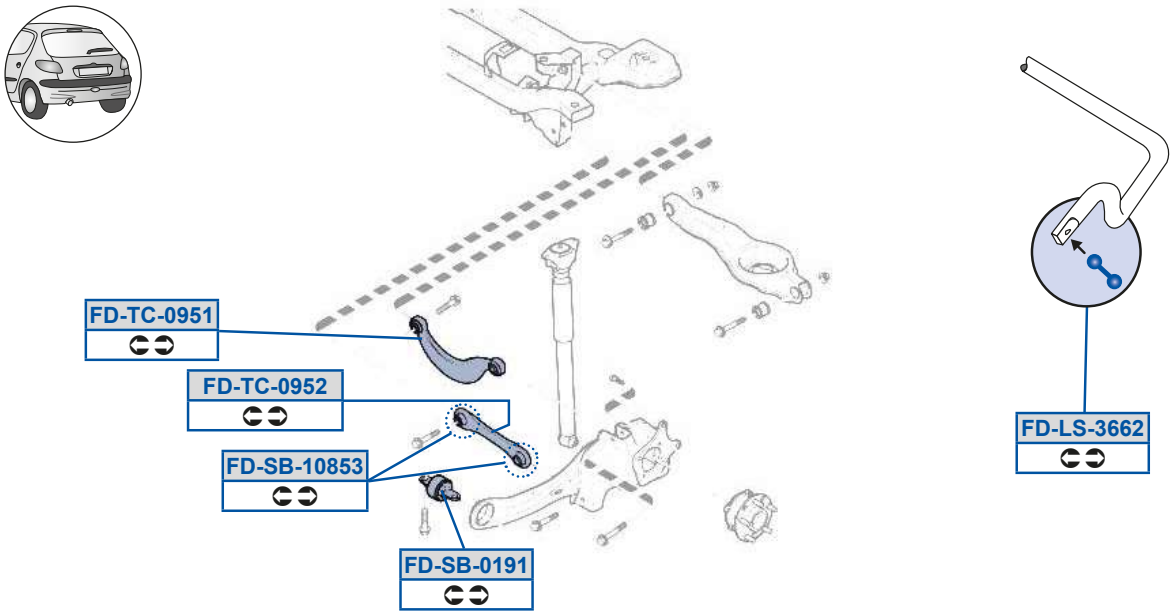

MOOG

TR5Oi 5AGCE
9EBC793A7EED9FA

TR5eQ58GC>
A7DFA7DE

TR5Sd5ADDC
9EBC7739EBC78

gg5PX5BFEA
A89788F7 /40BA89788F8 /40

TR5Sd5AFG9
9EBC7739EBC78

gg5dP5ADBE
A7E8B89F

TR5Zd5ADD>
A7E8BBDD3A8989CBF

gg5dP5ADBF
A7DEFBB7

TR5Zd5ADDE
A8AB79EA3FD9ACED

gg5dP5GFF>
A7DF8CBD

TR5dP589G9
A7DDDF98

gg5h a5BFE9
A7E8BB993A7EA7F9G

TR5dP598FCA
87D8DDF /40

gg5h a5BFE>
A7ED79EG3A89788F7

TR5eQ58GC9
FDE8G98

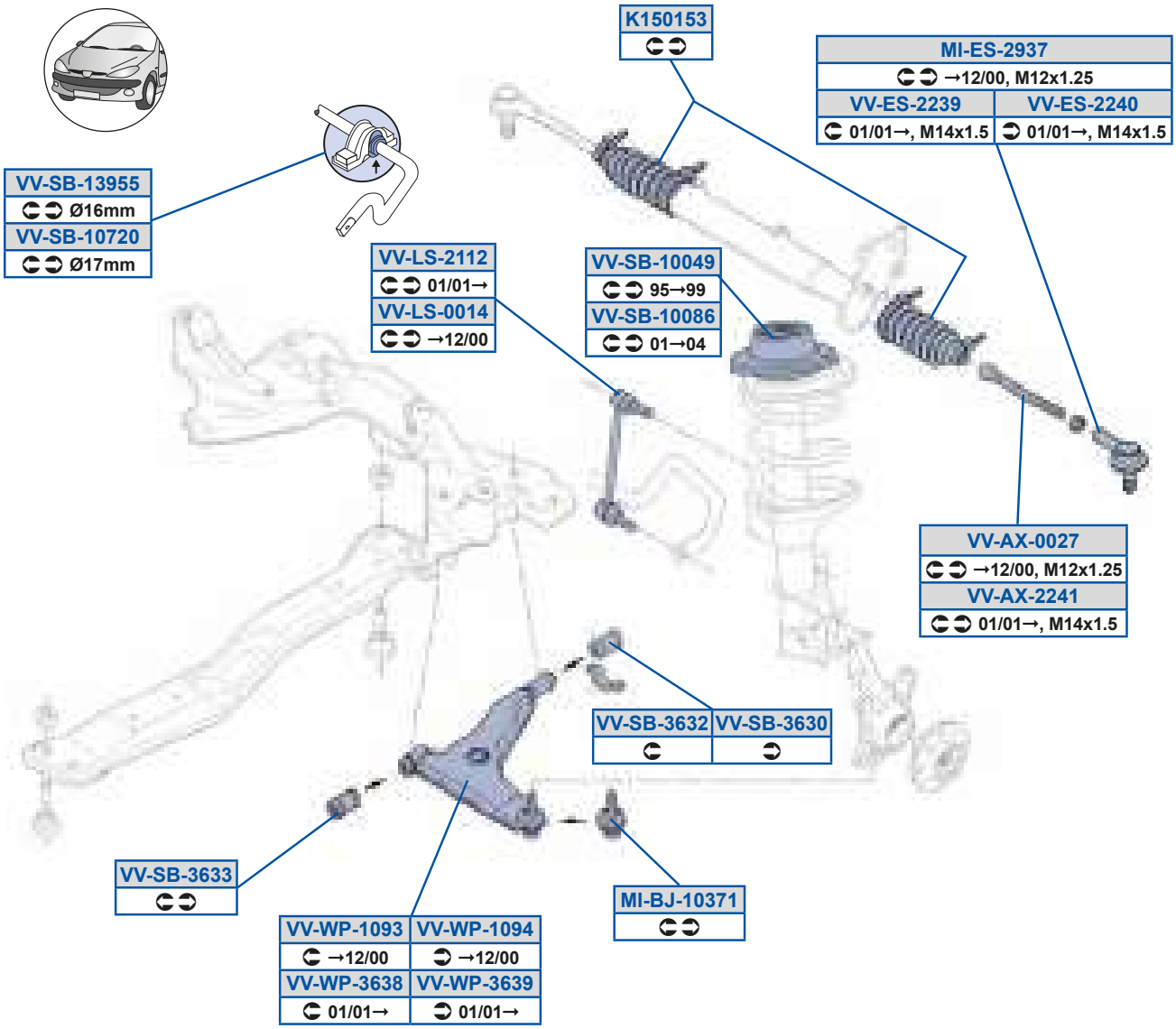
K150153
MI-ES-2937
→12/00, M12x1.25
VV-ES-2239
01/01→, M14x1.5
VV-ES-2240
01/01→, M14x1.5
VV-SB-13955
Ø16mm
VV-SB-10720
Ø17mm
VV-LS-2112
01/01→
VV-LS-0014
→12/00
VV-SB-10049
95→99
VV-SB-10086
01→04
VV-AX-0027
→12/00, M12x1.25
VV-AX-2241
01/01→, M14x1.5
VV-SB-3632
VV-SB-3630
VV-SB-3633
MI-BJ-10371
VV-WP-1093
→12/00
VV-WP-1094
→12/00
VV-WP-3638
01/01→
VV-WP-3639
01/01→

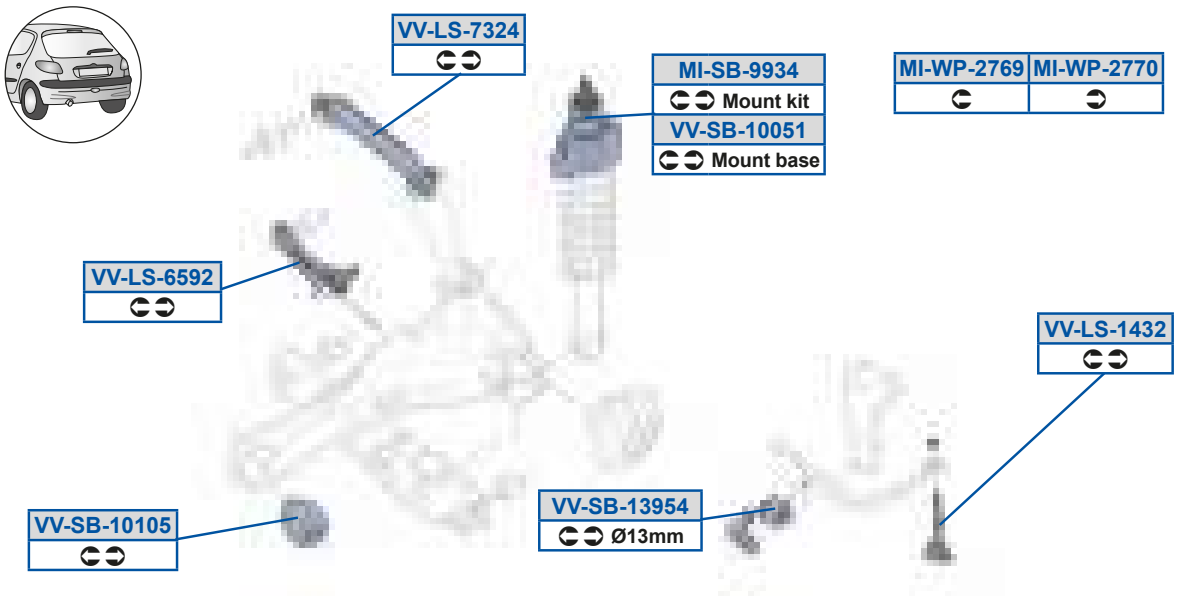
VV-LS-7324
MI-SB-9934
Mount kit
VV-SB-10051
Mount base
MI-WP-2769
MI-WP-2770
VV-LS-6592
VV-LS-1432
VV-SB-13954
Ø13mm
VV-SB-10105

MOOG

Y9C89CA
AABCEGD

gg5Sd5>>AG
9EB99C

gg5dP5988C9
A7F8F888

gg5dP5ADAA
A7F8FBDE

[V5PX598AE9
A7F98DC73A7F98DC8

gg5Sd5>>B8
9EB99D

gg5dP5988FD
A7D8DF9B3A7D8DF9C

gg5h a598GA
A7F98DC73A7FDAGF

[V5Sd5>GAE
A7FE7DGC3A7FE7DGC8

gg5Zd5889B
A7FE8EE73A7FEA877

gg5dP59898C
A7FC89CE3A7FE8998

gg5h a598GB
A7F98DC83A7FDAGF

[V5dP5GGAB
a P9B9ACF3a PAAFD97

gg5Zd59BA>
A7FC987A3a n9E988F

gg5dP598E>8
A7FFBC8F

gg5h a5ADAF
A7FFEDCA

[V5h a5>EDG
A7F8F7GE

gg5Zd5>99>
A7FFB8EG

gg5dP59AGCB
A7D8DGFC

gg5h a5ADAG
A7FFEDCB

[V5h a5>EE8
A7F8F7GD

gg5Zd5DCG>
A7D97EFC3A7F8F7G8

gg5dP59AGCC
A7FECBCE

gg5Oi 588>E
AABCEGE

gg5Zd5EA>B
A7D97EFD3A7FFBAD7

gg5dP5ADA8
A7FE9C88

gg5Oi 5>>B9
9EB99B

gg5dP5988BG
A7F8FBDC

gg5dP5ADA>
A7FE9C87

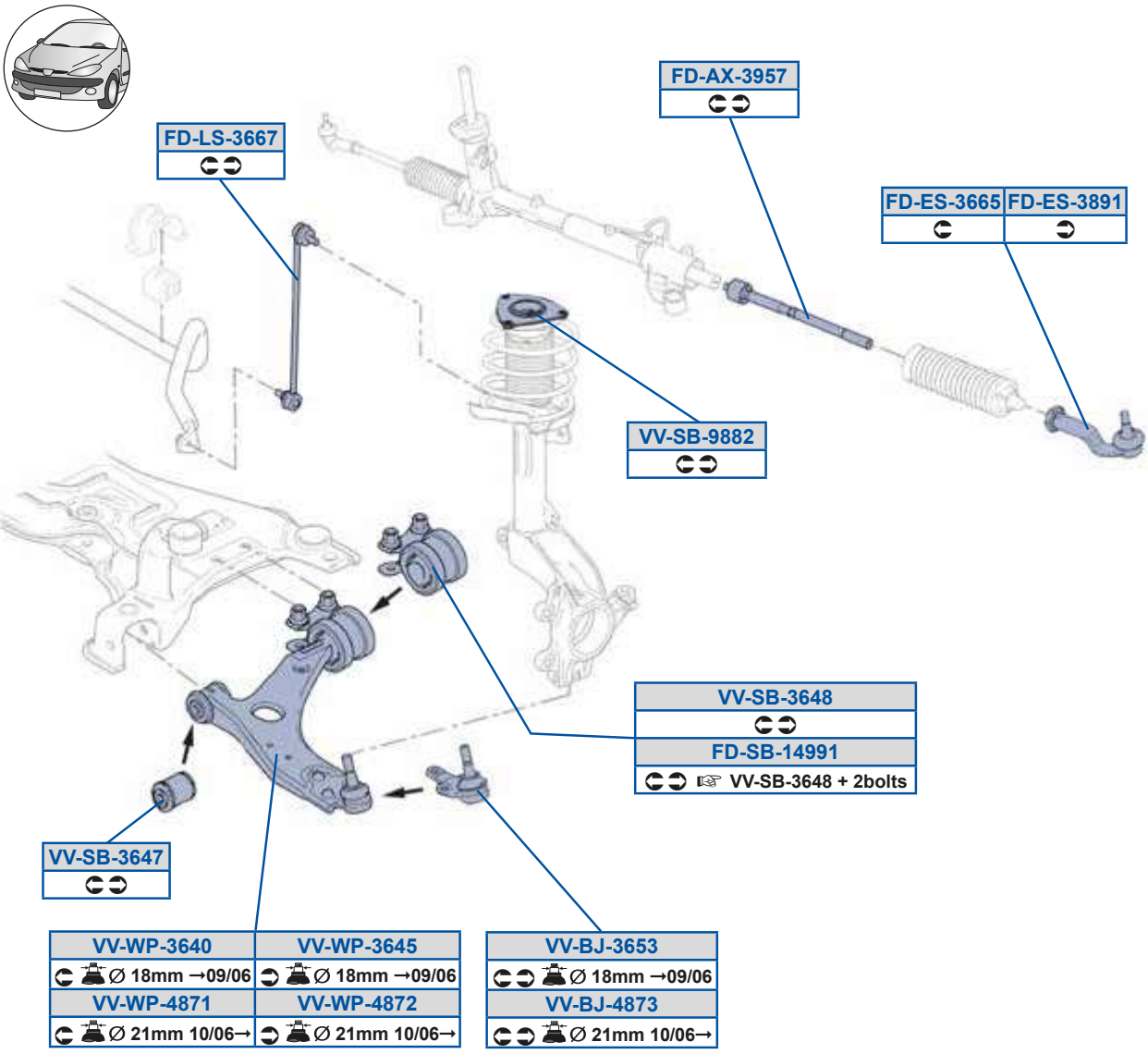
FD-AX-3957
FD-LS-3667
FD-ES-3665
FD-ES-3891
VV-SB-9882
VV-SB-3648
FD-SB-14991
VV-SB-3648 + 2bolts
VV-SB-3647
VV-WP-3640
Ø 18mm →09/06
VV-WP-3645
Ø 18mm →09/06
VV-WP-4871
Ø 21mm 10/06→
VV-WP-4872
Ø 21mm 10/06→
VV-BJ-3653
Ø 18mm →09/06
VV-BJ-4873
Ø 21mm 10/06→

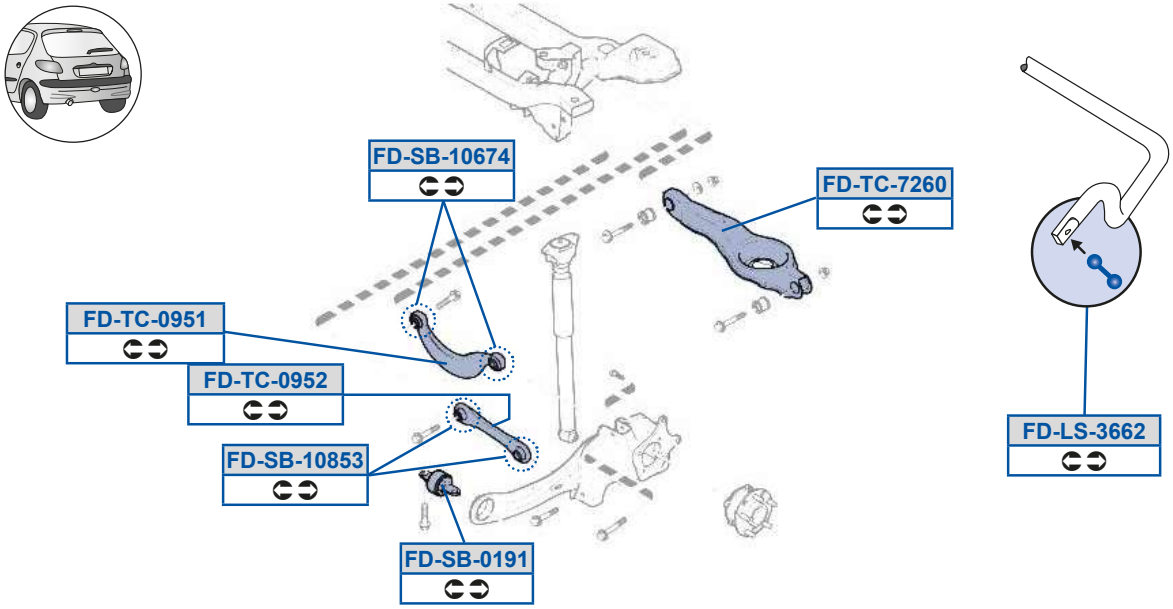
FD-SB-10674
FD-TC-7260
FD-TC-0951
FD-TC-0952
FD-SB-10853
FD-SB-0191
FD-LS-3662

MOOG

TR5Oi 5AGCE
9EBC793A7EED9FA

TR5Sd5ADDC
9EBC7739EBC78

TR5Sd5AFG9
9EBC7739EBC78

TR5Zd5ADD>
A7E8BBDD3A8989CBF

TR5Zd5ADDE
A8AB79EA3FD9ACED

TR5dP589G9
A7DDDF98

TR5dP598DEB
87D8DCG /40 38A9GEA7 /40

TR5dP598FCA
87D8DDF /40

TR5dP59BGG9
8BEEFCF3A7DEFBB7

TR5eQ58GC9
FDE8G98

TR5eQ58GC>
A7DFA7DE

TR5eQ5E>D8

gg5PX5ADCA
89ABAF9

gg5PX5BFEA
A89788F7 /40 3A89788F8 /40

gg5dP5ADBE
A7E8B89F

gg5dP5ADBF
A7DEFBB7

gg5dP5GFF>
A7DF8CBD

gg5ha5ADB8
A7E8B89D3A7E8BB99

gg5ha5ADBC
A7E8B89E3A7E8BB9A

gg5ha5BFE9
A7E8BB993A7EA7F9G

gg5ha5BFE>
A7ED79EG3A89788F7

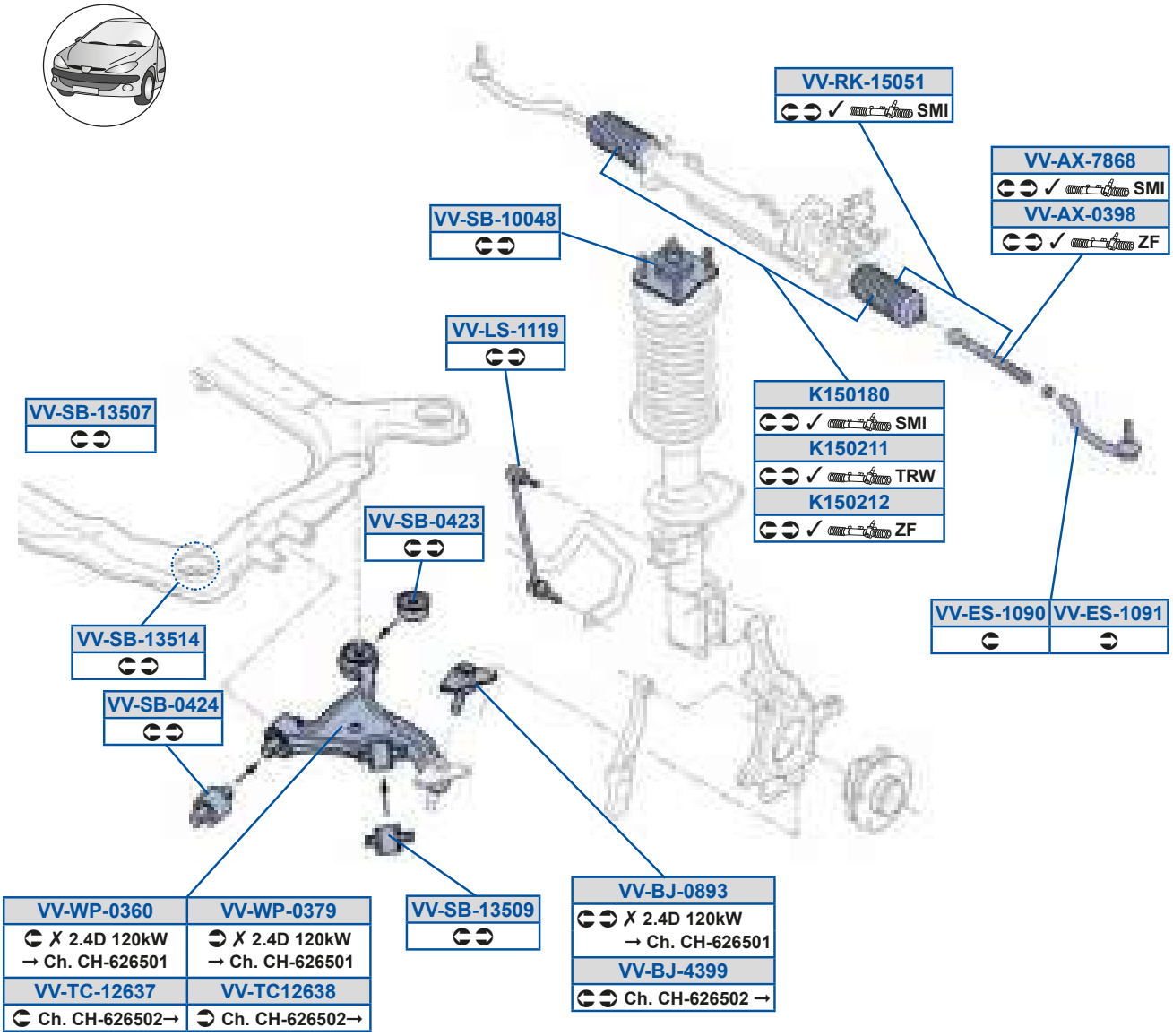
VV-RK-15051
SMI
VV-AX-7868
SMI
VV-AX-0398
ZF
VV-SB-10048
VV-LS-1119
K150180
SMI
K150211
TRW
K150212
ZF
VV-SB-13507
VV-SB-0423
VV-ES-1090
VV-ES-1091
VV-SB-13514
VV-SB-0424
VV-WP-0360
✗ 2.4D 120kW
→ Ch. CH-626501
VV-WP-0379
✗ 2.4D 120kW
→ Ch. CH-626501
VV-TC-12637
Ch. CH-626502→
VV-TC12638
Ch. CH-626502→
VV-SB-13509
VV-BJ-0893
✗ 2.4D 120kW
→ Ch. CH-626501
VV-BJ-4399
Ch. CH-626502 →

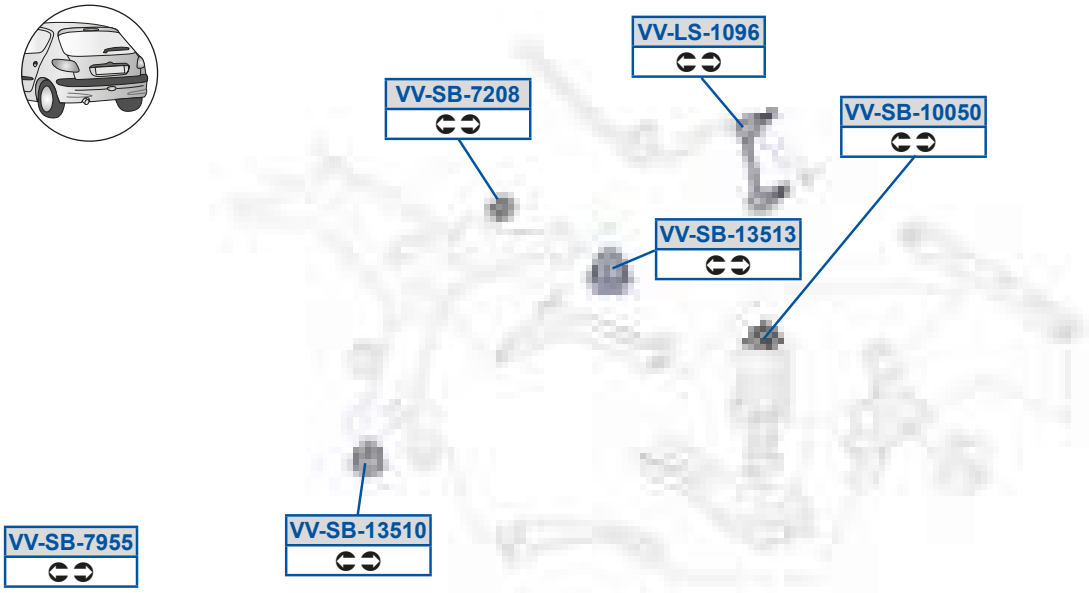
VV-LS-1096
VV-SB-7208
VV-SB-10050
VV-SB-13513
VV-SB-7955
VV-SB-13510

Y9C89F8
G8G8B7G

gg5Sd598G9
897CDCF39EB8ED

gg5dP59AC8E
AC7EG9A

gg5eQ59>DAF
A7ED7CFE

Y9C8>99
9E8D78

gg5Zd598GD
A7DBEG973A7E8BDEF

gg5dP59AC8G
A7E8BGEE3A89898G8

gg5h a58AD8
A7DAC99G3FD9AGCE

Y9C8>9>
9E9B8F

gg5Zd5999G
9EBA7A39EBBCD

gg5dP59AC98
G8CECED

gg5h a58AEG
A7DAC9A73FD9AGCF

gg5Oi 58AGF
9EBACA

gg5c Y59C8C9
9EB8EG

gg5dP59AC9A
G8CEGC93GBDCGEC

gg5Oi 5EFDF
9EB8EG

gg5dP58B>A
FDA7D7B3GBD8D9D

gg5dP59AC9B
FDEFBGE

gg5PX58FGA
9EB8FD39EB8GA

gg5dP58B>B
GBBAFF93GBDCGE8

gg5dP5E>8F
FDE99973G8EAED8

gg5PX5BAGG
9EBAEE39EBC9A

gg5dP5988BF
A7E8BGDF3FDABBCE

gg5dP5EGCC
A7DBCB783A89EEGC9

gg5Sd598G8
897CDCF39EB8EC

gg5dP5988C8
A7DDD9E8

gg5eQ59>DAE
A7ED7CFD

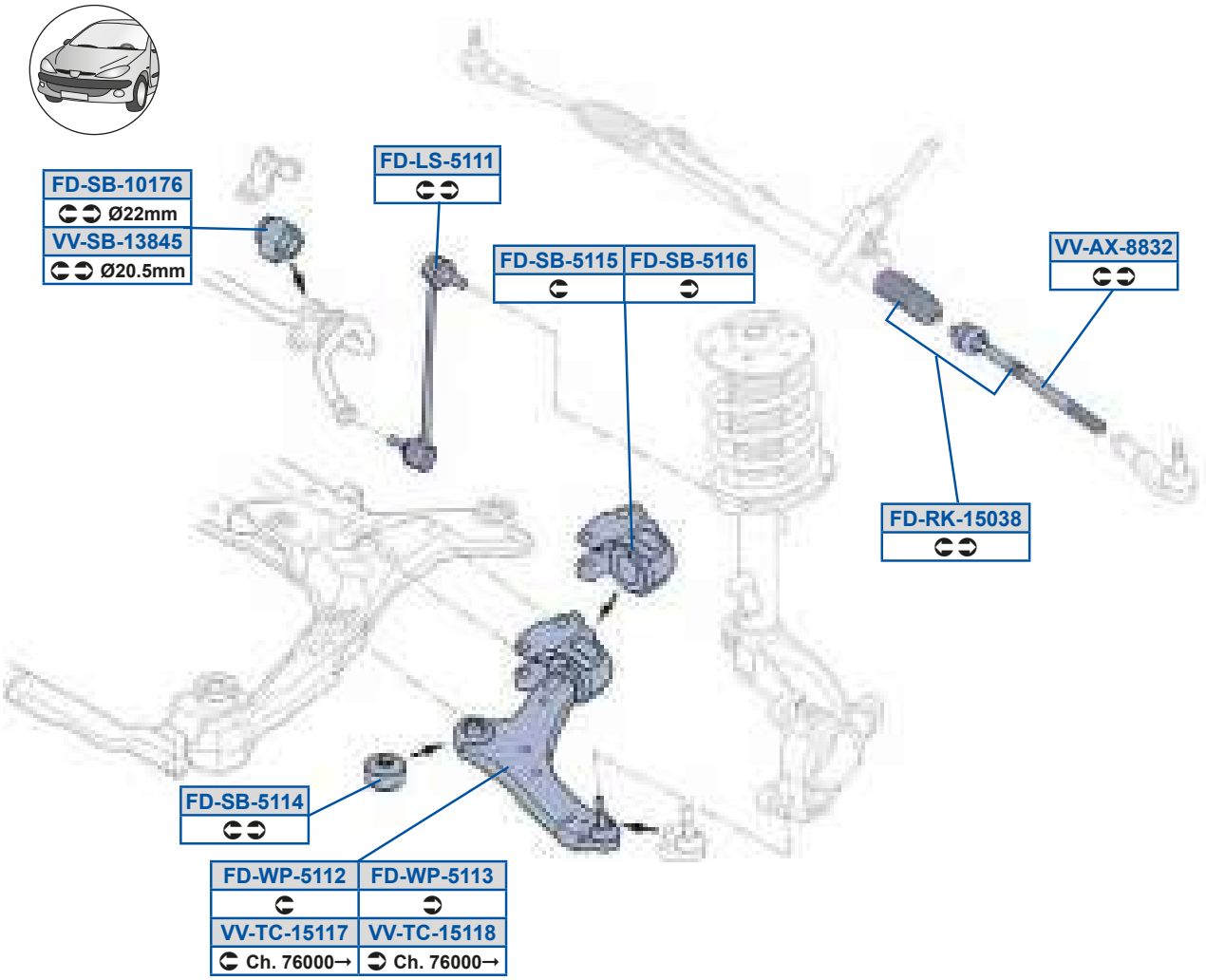
FD-SB-10176
Ø22mm
VV-SB-13845
Ø20.5mm
FD-LS-5111
FD-SB-5115
FD-SB-5116
VV-AX-8832
FD-RK-15038
FD-SB-5114
FD-WP-5112
FD-WP-5113
VV-TC-15117
Ch. 76000→
VV-TC-15118
Ch. 76000→

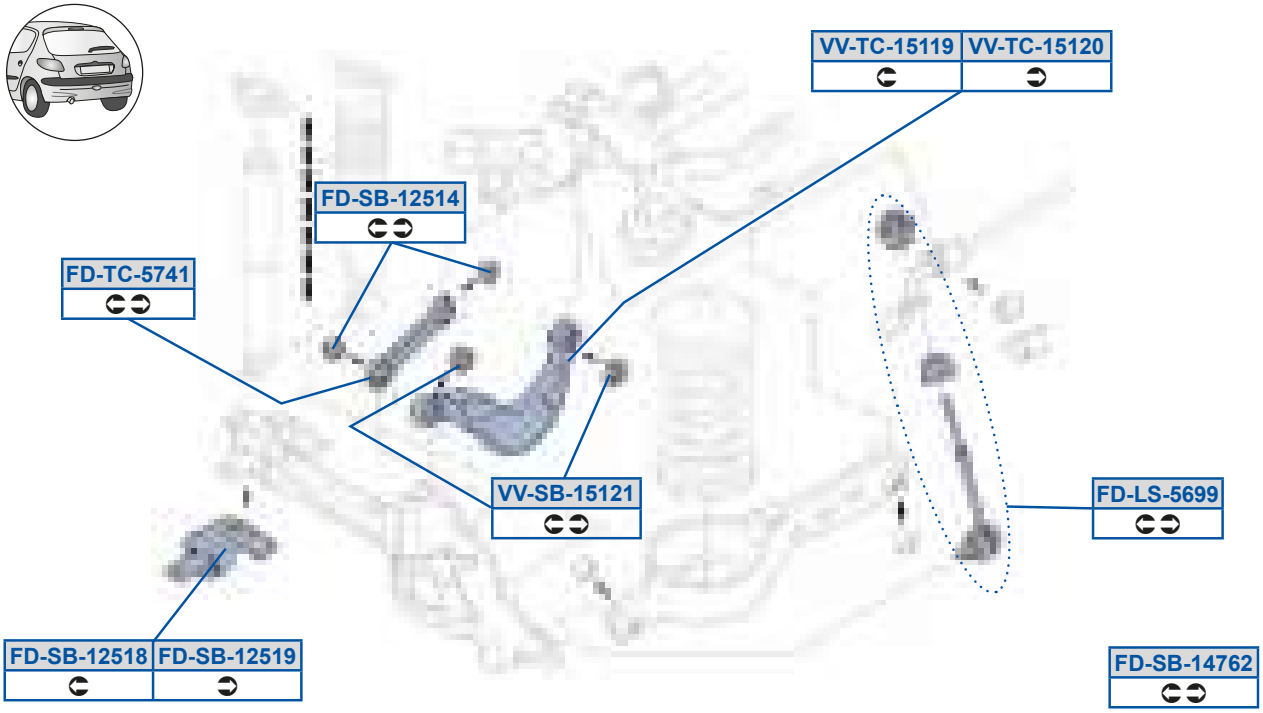
VV-TC-15119
VV-TC-15120
FD-SB-12514
FD-TC-5741
VV-SB-15121
FD-LS-5699
FD-SB-12518
FD-SB-12519
FD-SB-14762

TR5Zd5C999
A7DBFBD8

TR5Zd5CDGG
8AEEB8D38B9CFCA

TR5c Y59C8AF
8BAA9E838CGDCEB

TR5dP5989ED

TR5dP59>C9B

TR5dP59>C9F
A8AFE9F73A8B7DAAE

TR5dP59>C9G
A8AFE9F83A8B7DAC7

TR5dP59BED>
8BAE8G93A7ED7G98

TR5dP5C99B
8BDD8FD /4Q38BDD8FF /40

TR5dP5C99C
8BDD8FD /4Q38BDD8FF /40

TR5dP5C99D
8BDD8FD /4Q38BDD8FF /40

TR5eQ5CEB9

TR5h a5C99>
8BDD8FF38BDG79D

TR5h a5C99A
8BCFEEA38BDD8FD

gg5Oi 5FFA>
A89F7B7F

gg5dP59AFBC
A8AB7C88

gg5dP59C9>9
A8979ED9 /4Q3A8B7DEAD /40

gg5eQ59C99E
A89D9BEC3A8AB789F

gg5eQ59C99F
A8B9GA97

gg5eQ59C99G
A8979ED83A8B7DEAC

gg5eQ59C9>8
A8979ED93A8B7DEAD

QE8 WQ x áu x	8A7GF 9878C	QE8 WQ x CFE; 1	8A7GE 8G78;
dE8 CFEB1	997GD 99788	gE8 WCFEC4FED1	997GD 9; 788

VV-ES-5549 | VV-ES-5548

VV-AX-3518
SMI
VV-AX-5551
TRW

VV-SB-10046
✗ Nivomat Suspensions

VV-SB-13273
Ø20mm

VV-DS-0019

VV-SB-13507

K150180
✓ SMI
K150211
✓ TRW

VV-SB-2321
✗ Turbo / Diesel

VV-SB-3086
✓ Turbo / Diesel

VV-BJ-5554
→ Al

VV-WP-1526
✗ Turbo / Diesel

VV-WP-1525
✗ Turbo / Diesel

VV-WP-3657
✓ Turbo / Diesel

VV-WP-3658
✓ Turbo / Diesel

VV-RK-8416
✗ TDi

VV-SB-7234 | VV-SB-7235

VV-SB-10047
✗ Nivomat Suspensions

VV-LS-13272

MOOG

Y9C89F8
G8G8B7G

gg5Zd59A>E>
AAC77C93AC8D899

gg5dP5E>AB
ACA7979

Y9C8>99
9E8D78

gg5c Y5FB9D
9E8DA8

gg5dP5E>AC
AC8DBGD

gg5Oi 5AC9F
G8G8B873G8G8B878

gg5dP5988BD
ACBD8FGD3FDABBCE

gg5h a59C>C
9E8D9G39E8G79

gg5Oi 5CCC9
ACBD9DD3ACBD9DD9

gg5dP5988BE
AC8D8C83G8B7FBE

gg5h a59C>D
9E8D9F39E8G78

gg5PX5CCCB
9E8CG83ACBDC9B

gg5dP59A>EA
ACBDEA7

gg5h a5ADCE
9E99EA39E9AAD

gg5Rd5889G
8AFEFD73A7DBEG98

gg5dP59AC8E
AC7EG9A

gg5h a5ADCF
9E999E39E9AAE

gg5Sd5CCBF
9E8CGG39E8CGGA

gg5dP5>A>9
9E8DA83DF779C8

gg5Sd5CCBG
99E8CGFC39E8CGF

gg5dP5A8FD
FD9FBGE /4CBFD9FBGF /4C

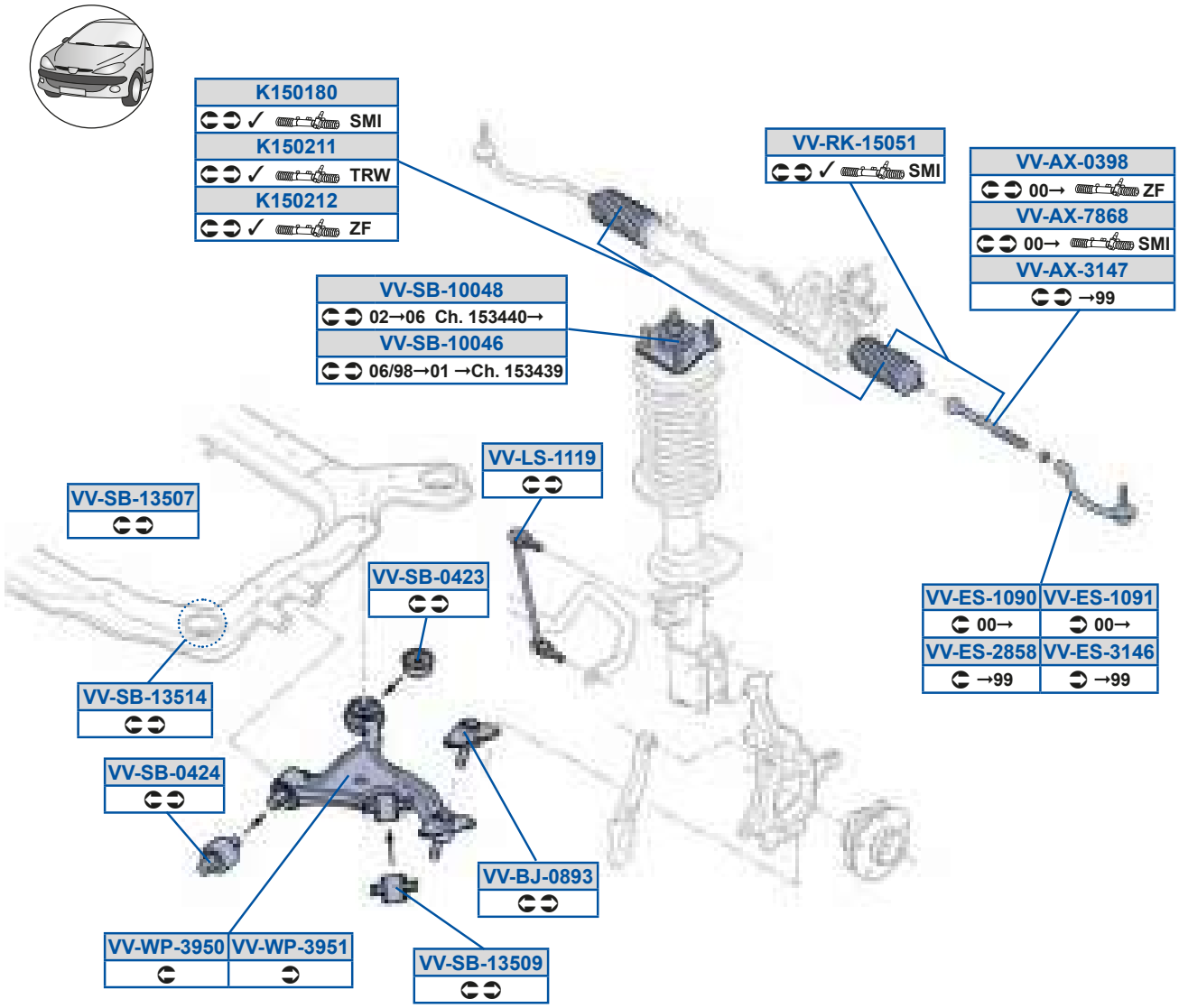

VV-SB-15121

VV-SB-13510

VV-SB-13513

VV-SB-7208

VV-SB-7955

VV-SB-10050

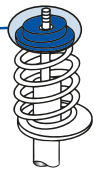

MOOG

Y9C89F8
G8G8B7G

gg5Sd598G9
897CDCF39EB8ED

gg5dP5988BF
A7E8BGDF3FDABBCE

gg5dP5E>8F
FDE99973G8EAED8

Y9C8>99
9E8D78

gg5Sd5>FCF
9E9B8D

gg5dP5988C8
A7DDD9E8

gg5dP5EGCC
A7DBCB783A89EEGC9

Y9C8>9>
9E9B8F

gg5Sd5A9BD
9E9B8E

gg5dP59AC8E
AC7EG9A

gg5h a5AGC8
A7DAC99E3FD9AGCC

gg5Oi 58AGF
9EBACA

gg5Zd5999G
9EBA7A39EBBCD

gg5dP59AC8G
A7E8BGEE3A89898G8

gg5h a5AGC9
A7DAC99F3FD9AGCD

gg5Oi 5A9BE
9E9B9F

gg5c Y59C8C9
9EB8EG

gg5dP59AC98
G8CECED

gg5Oi 5EFDF
9EB8EG

gg5dP58B>A
FDA7D7B3GBD8D9D

gg5dP59AC9A
G8CEGC93GBDCGEC

gg5PX58FGA
9EB8FD39EB8GA

gg5dP58B>B
GBBAFF93GBDCGE8

gg5dP59AC9B
FDEFBGE

gg5Sd598G8
897CDCF39EB8EC

gg5dP5988BD
ACBD8FGD3FDABBCE

gg5dP59C9>9
A8979ED9 /4C8A8B7DEAD /40

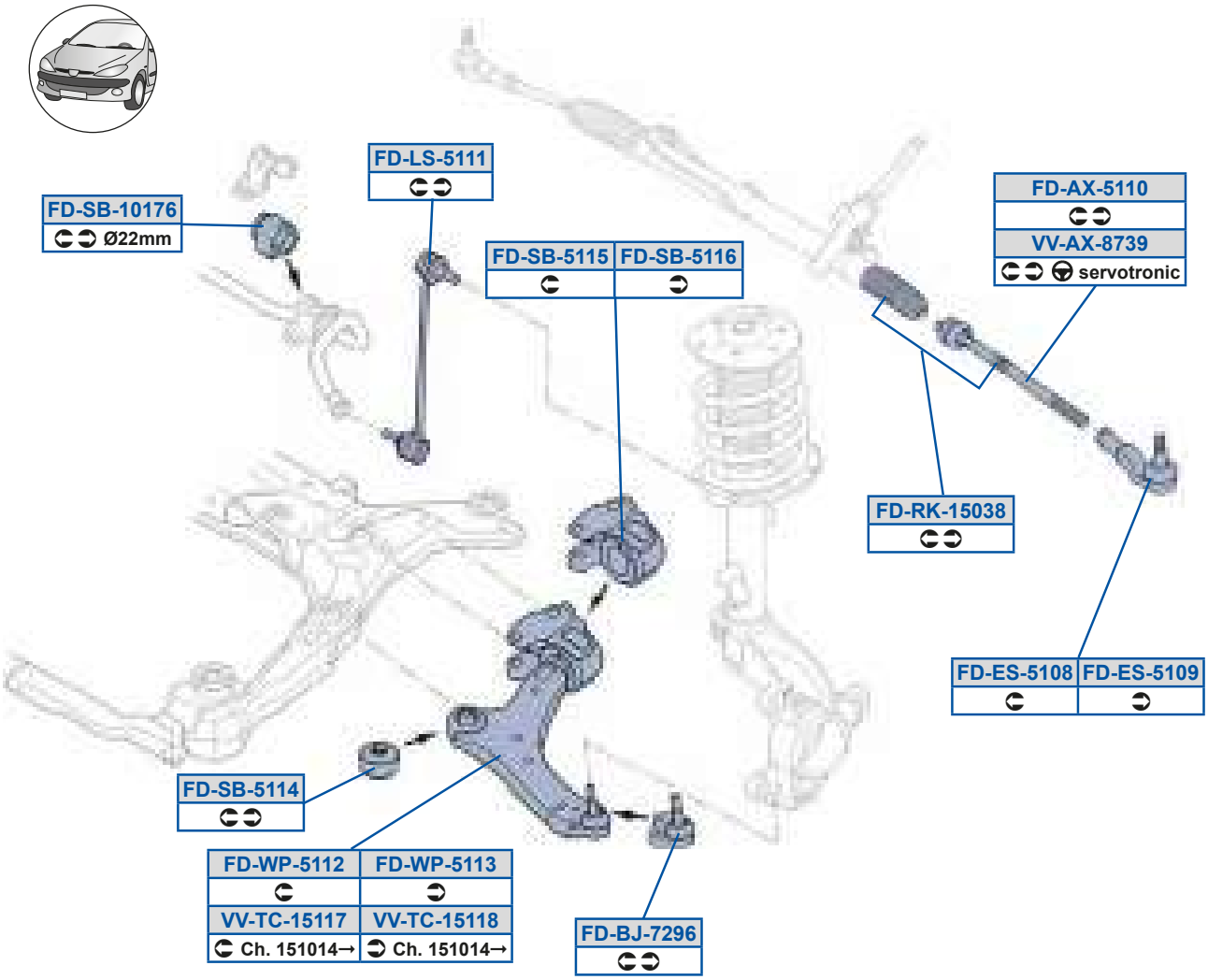
FD-SB-10176
Ø22mm
FD-LS-5111
FD-SB-5115
FD-SB-5116
FD-AX-5110
VV-AX-8739
servotronic
FD-RK-15038
FD-ES-5108
FD-ES-5109
FD-SB-5114
FD-WP-5112
FD-WP-5113
VV-TC-15117
Ch. 151014→
VV-TC-15118
Ch. 151014→
FD-BJ-7296

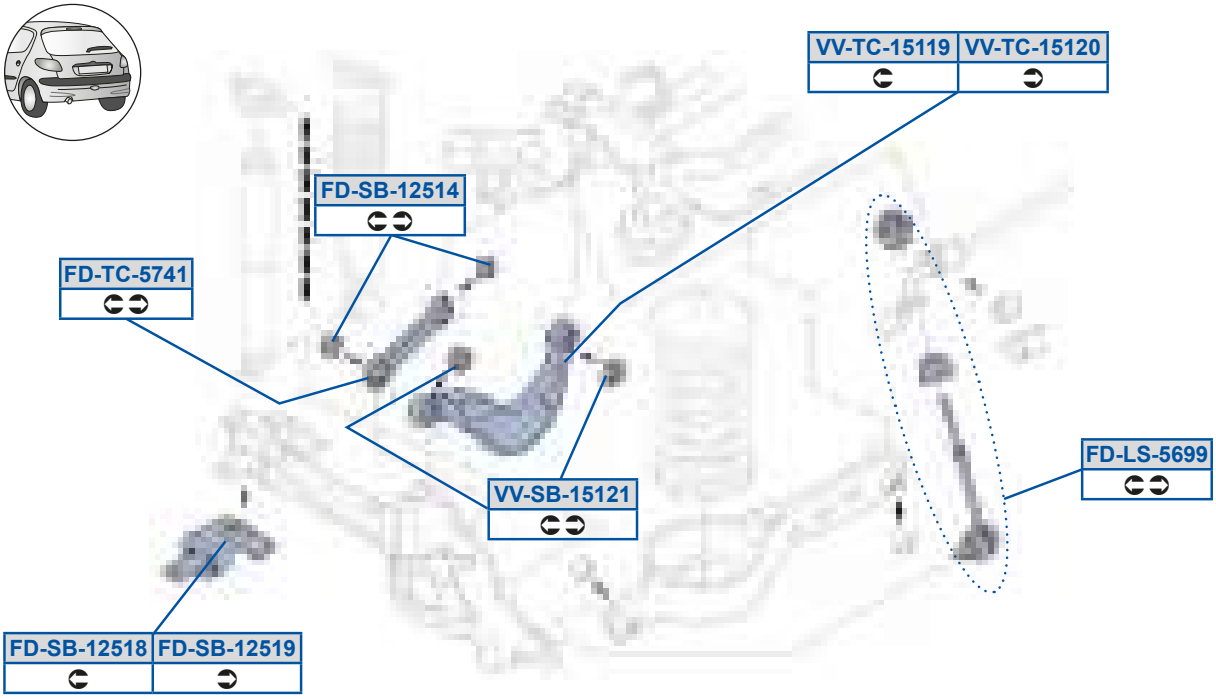
VV-TC-15119
VV-TC-15120
FD-SB-12514
FD-TC-5741
VV-SB-15121
FD-LS-5699
FD-SB-12518
FD-SB-12519

MOOG

TR5Oi 5C998
8BAA9E838CGDCEB

TR5PX5E>GD
A89EEABA3A89EEABB

TR5Sd5C98F
A7EED9BG3A89F7777

TR5Sd5C98G
A7EED9BF3A89F7778

TR5Zd5C999
A7DBFBD8

TR5Zd5CDGG
8AEEB8D38B9CFCA

TR5cY59C8AF
8BAA9E838CGDCEB

TR5dP5989ED

TR5dP59>C9B

TR5dP59>C9F
A8AFE9F73A8B7DAAE

TR5dP59>C9G
A8AFE9F83A8B7DAC7

TR5dP5C99B
8BDD8FD /4C38BDD8FF /40

TR5dP5C99C
8BDD8FD /4C38BDD8FF /40

TR5dP5C99D
8BDD8FD /4C38BDD8FF /40

TR5eQ5CEB9

TR5h a5C99>
8BDD8FF38BDG79D

TR5h a5C99A
8BCFEEA38BDD8FD

gg5Oi 5FEAG
A7EED9CC3A7EEDB9C

gg5dP59C9>9
A8979ED9 /4C3A8B7DEAD /40

gg5eQ59C99E
A89D9BEC3A8AB789F

gg5eQ59C99F
A8B9GA97

gg5eQ59C99G
A8979ED83A8B7DEAC

gg5eQ59C9>8
A8979ED93A8B7DEAD

gB8 Vt vÉut v 0C; C4C; D1	8A79;		

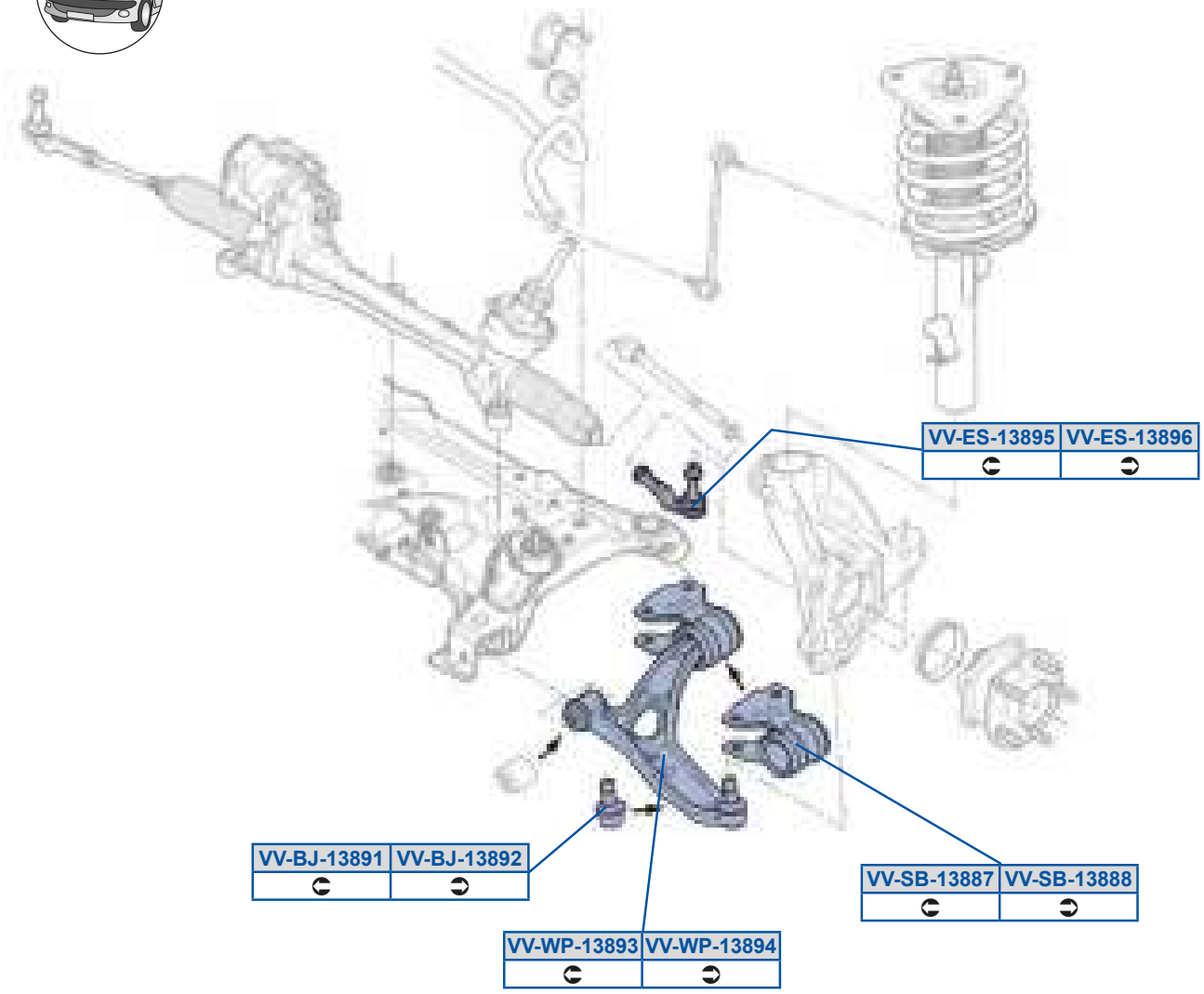

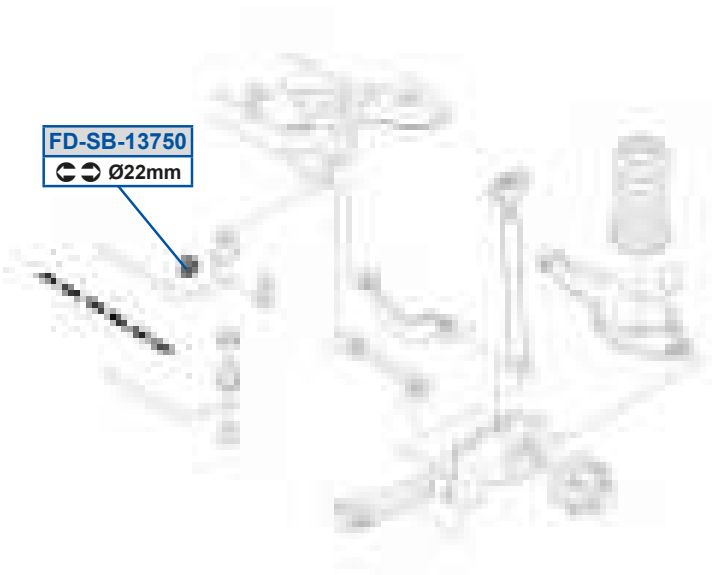

MOOG

TR5dP59AEC8
A8A8E9BE

gg5PX59AFG9
A8 AB7 9A9 /40

gg5PX59AFG>
A8 AB7 9A8 /40

gg5Sd59AFGC
A8A8EEF8

gg5Sd59AFGD
A8A8EF8G

gg5dP59AFFE
A89EED97 /40 3A89EED98 /40

gg5dP59AFFF
A89EED97 /40 3A89EED98 /40

gg5h a59AFGA
A8AB79A9

gg5h a59AFGB
A8AB79A8

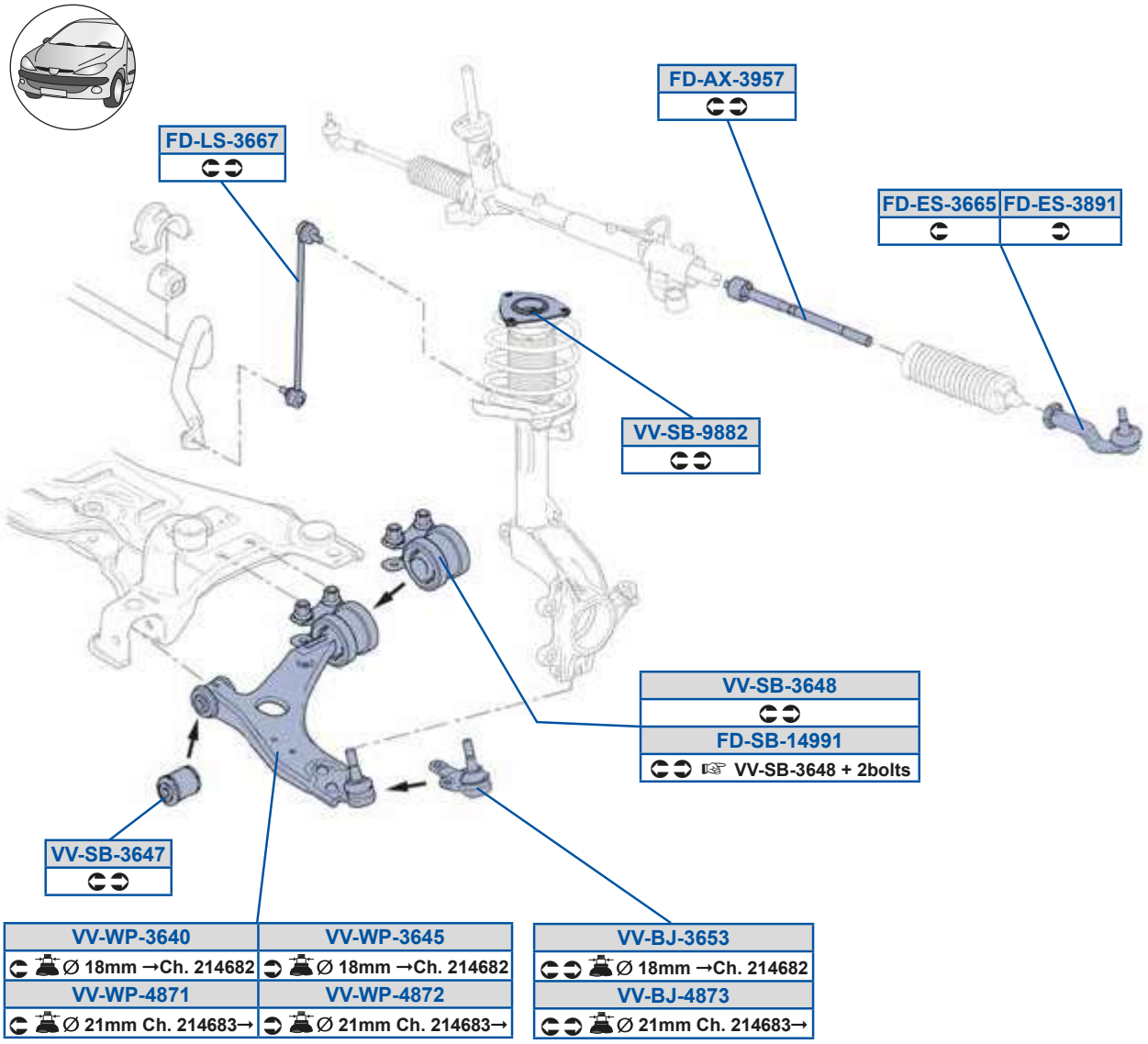
FD-AX-3957
FD-LS-3667
FD-ES-3665
FD-ES-3891
VV-SB-9882
VV-SB-3648
FD-SB-14991
VV-SB-3648 + 2bolts
VV-SB-3647
VV-WP-3640
Ø 18mm →Ch. 214682
VV-WP-3645
Ø 18mm →Ch. 214682
VV-BJ-3653
Ø 18mm →Ch. 214682
VV-WP-4871
Ø 21mm Ch. 214683→
VV-WP-4872
Ø 21mm Ch. 214683→
VV-BJ-4873
Ø 21mm Ch. 214683→

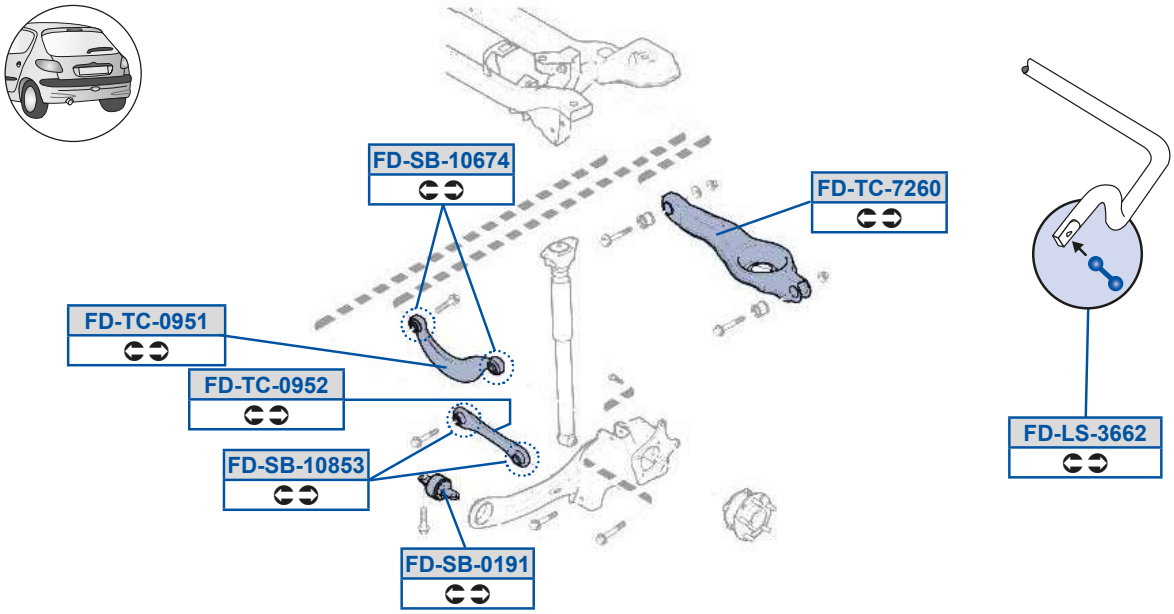
FD-SB-10674
FD-TC-7260
FD-TC-0951
FD-TC-0952
FD-SB-10853
FD-SB-0191
FD-LS-3662

MOOG

TR5Oi 5AGCE
9EBC793A7EED9FA

TR5Sd5ADDC
9EBC7739EBC78

TR5Sd5AFG9
9EBC7739EBC78

TR5Zd5ADD>
A7E8BBDD3A8989CBF

TR5Zd5ADDE
A8AB79EA3FD9ACED

TR5dP589G9
A7DDDF98

TR5dP598DEB
87D8DCG /403A9GEA7 /40

TR5dP598FCA
87D8DDF /40

TR5dP59BGG9
8BEEFCF3A7DEFBB7

TR5eQ58GC9
FDE8G98

TR5eQ58GC>
A7DFA7DE

TR5eQ5E>D8

gg5PX5ADCA
89ABAF9

gg5PX5BFEA
A89788F7 /403A89788F8 /40

gg5dP5ADBE
A7E8B89F

gg5dP5ADBF
A7DEFBB7

gg5dP5GFF>
A7DF8CBD

gg5ha5ADB8
A7E8B89D3A7E8BB99

gg5ha5ADBC
A7E8B89E3A7E8BB9A

gg5ha5BFE9
A7E8BB993A7EA7F9G

gg5ha5BFE>
A7ED79EG3A89788F7

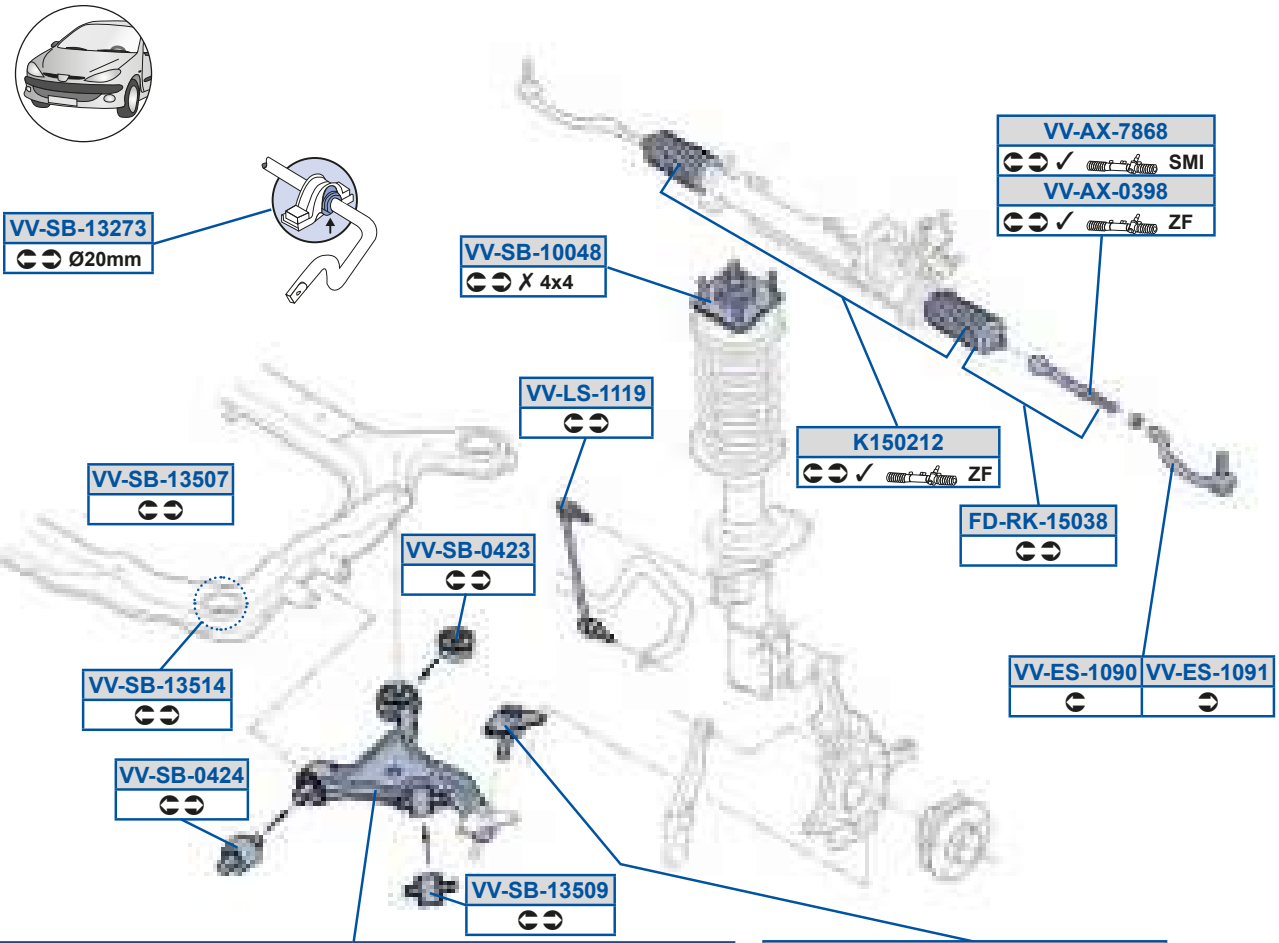

VV-WP-0360	VV-WP-0379	VV-BJ-0893
→ Ch. CH-647148 (Made in Sweden) → Ch. CH-645617 (Made in Belgium)	→ Ch. CH-647148 (Made in Sweden) → Ch. CH-645617 (Made in Belgium)	→ Ch. CH-647148 (Made in Sweden) → Ch. CH-645617 (Made in Belgium)
VV-TC-12637	**VV-TC-12638**	**VV-BJ-4399**
Ch. CH-647149 → (Made in Sweden) Ch. CH-645618 → (Made in Belgium)	Ch. CH-647149 → (Made in Sweden) Ch. CH-645618 → (Made in Belgium)	Ch. CH-647149 → (Made in Sweden) Ch. CH-645618 → (Made in Belgium)

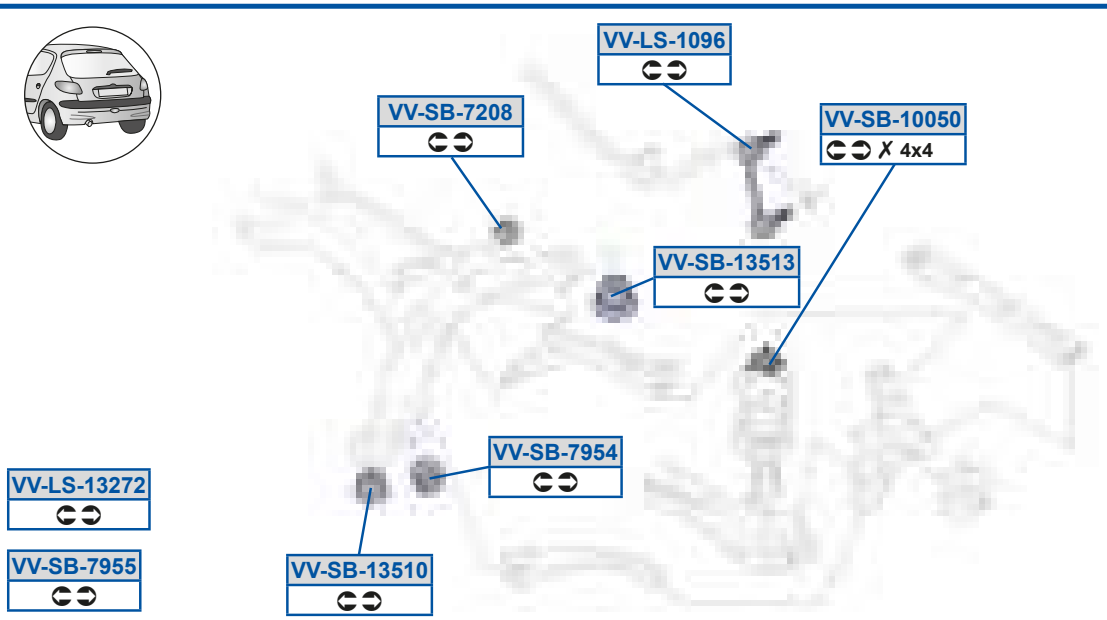

TR5c Y59C8AF
8BAA9E838CGDCEB

Y9C8>9>
9E9B8F

gg5Oi 58AGF
9EBACA

gg5Oi 5EFDF
9EB8EG

gg5PX58FGA
9EB8FD39EB8GA

gg5PX5BAGG
9EBAEE39EBC9A

gg5Sd598G8
897CDCF39EB8EC

gg5Sd598G9
897CDCF39EB8ED

gg5Zd598GD
A7DBEG973A7E8BDEF

gg5Zd5999G
9EBA7A39EBBCD

gg5Zd59A>E>
AAC77C93AC8D899

gg5dP58B>A
FDA7D7B3GBD8D9D

gg5dP58B>B
GBBAFF93GBDCGE8

gg5dP5988BF
A7E8BGDF3FDABBCE

gg5dP5988C8
A7DDD9E8

gg5dP59A>EA
ACBDEA7

gg5dP59AC8E
AC7EG9A

gg5dP59AC8G
A7E8BGEE3A89898G8

gg5dP59AC98
G8CECED

gg5dP59AC9A
G8CEGC93GBDCGEC

gg5dP59AC9B
FDEFBGE

gg5dP5E>8F
FDE99973G8EAED8

gg5dP5EGCB
A7EBFFFG3G9778CB

gg5dP5EGCC
A7DBCB783A89EEGC9

gg5eQ59>DAE
A7ED7CFD

gg5eQ59>DAF
A7ED7CFE

gg5h a58AD8
A7DAC99G3FD9AGCE

gg5h a58AEG
A7DAC9A73FD9AGCF

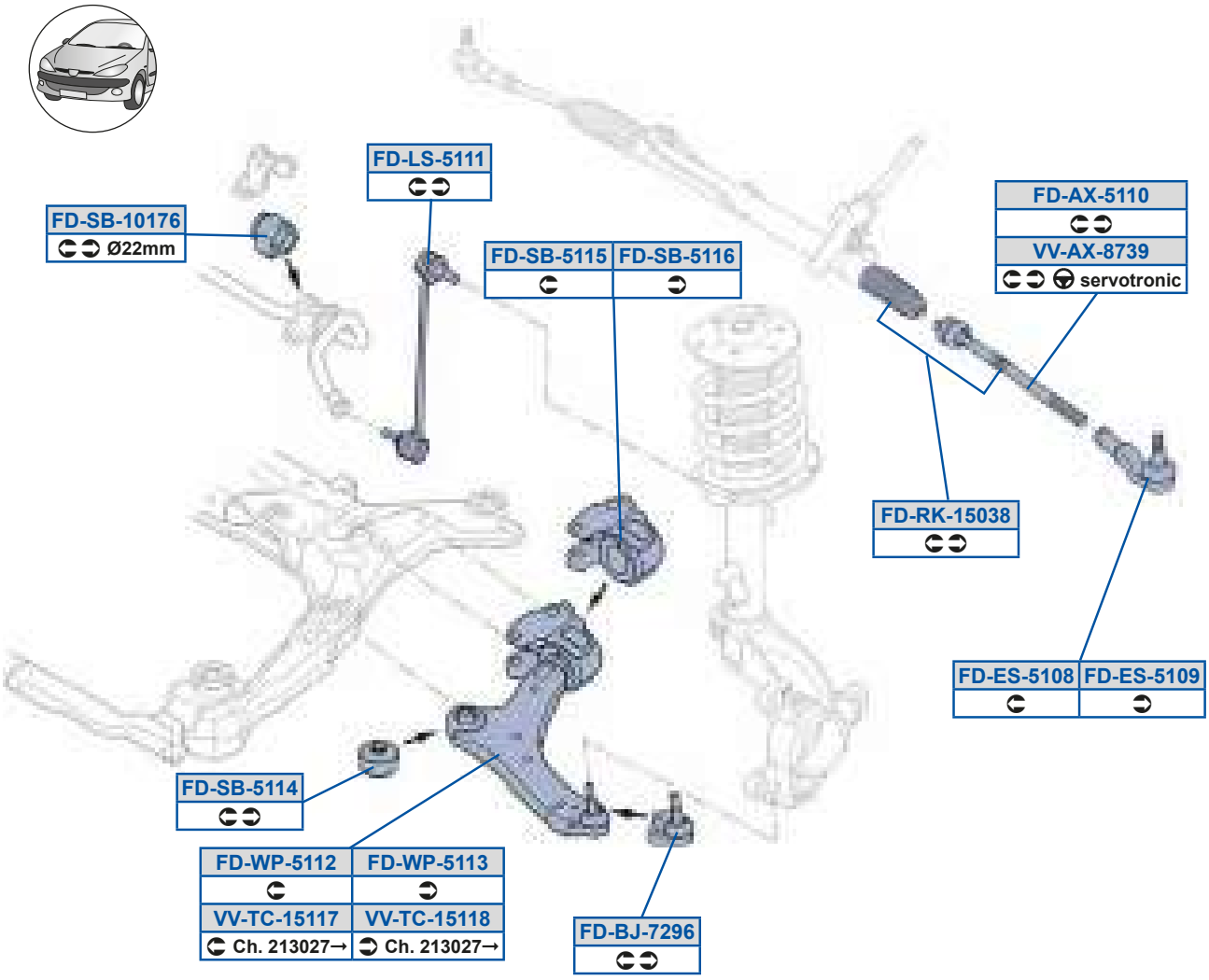
FD-LS-5111
FD-SB-10176
Ø22mm
FD-SB-5115
FD-SB-5116
FD-AX-5110
VV-AX-8739
servotronic
FD-RK-15038
FD-ES-5108
FD-ES-5109
FD-SB-5114
FD-WP-5112
FD-WP-5113
VV-TC-15117
Ch. 213027→
VV-TC-15118
Ch. 213027→
FD-BJ-7296

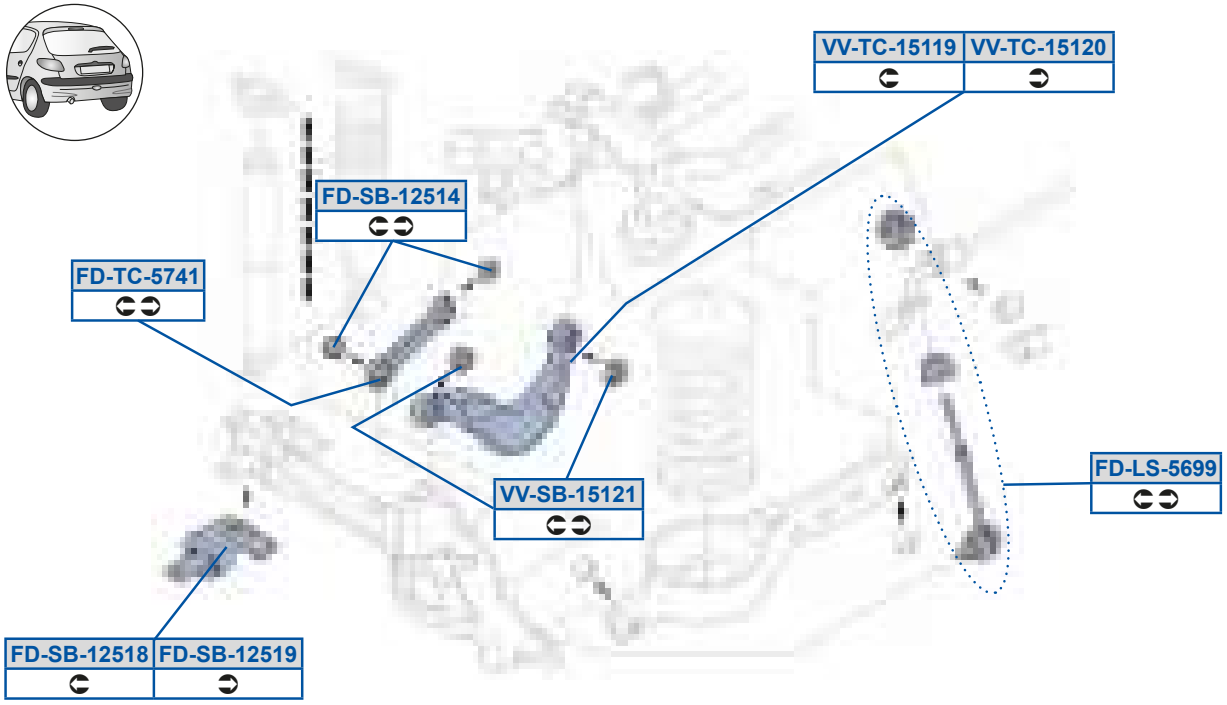
VV-TC-15119
VV-TC-15120
FD-SB-12514
FD-TC-5741
VV-SB-15121
FD-LS-5699
FD-SB-12518
FD-SB-12519

TR5Oi 5C998
8BAA9E838CGDCEB

TR5PX5E>GD
A89EEABA3A89EEABB

TR5Sd5C98F
A7EED9BG3A89F7777

TR5Sd5C98G
A7EED9BF3A89F7778

TR5Zd5C999
A7DBFBD8

TR5Zd5CDGG
8AEEB8D38B9CFCA

TR5cY59C8AF
8BAA9E838CGDCEB

TR5dP5989ED

TR5dP59>C9B

TR5dP59>C9F
A8AFE9F73A8B7DAAE

TR5dP59>C9G
A8AFE9F83A8B7DAC7

TR5dP5C99B
8BDD8FD /4Q38BDD8FF /40

TR5dP5C99C
8BDD8FD /4Q38BDD8FF /40

TR5dP5C99D
8BDD8FD /4Q38BDD8FF /40

TR5eQ5CEB9

TR5h a5C99>
8BDD8FF38BDG79D

TR5h a5C99A
8BCFEEA38BDD8FD

gg5Oi 5FEAG
A7EED9CC3A7EEDB9C

gg5dP59C9>9
A8979ED9 /4Q3A8B7DEAD /40

gg5eQ59C99E
A89D9BEC3A8AB789F

gg5eQ59C99F
A8B9GA97

gg5eQ59C99G
A8979ED83A8B7DEAC

gg5eQ59C9>8
A8979ED93A8B7DEAD

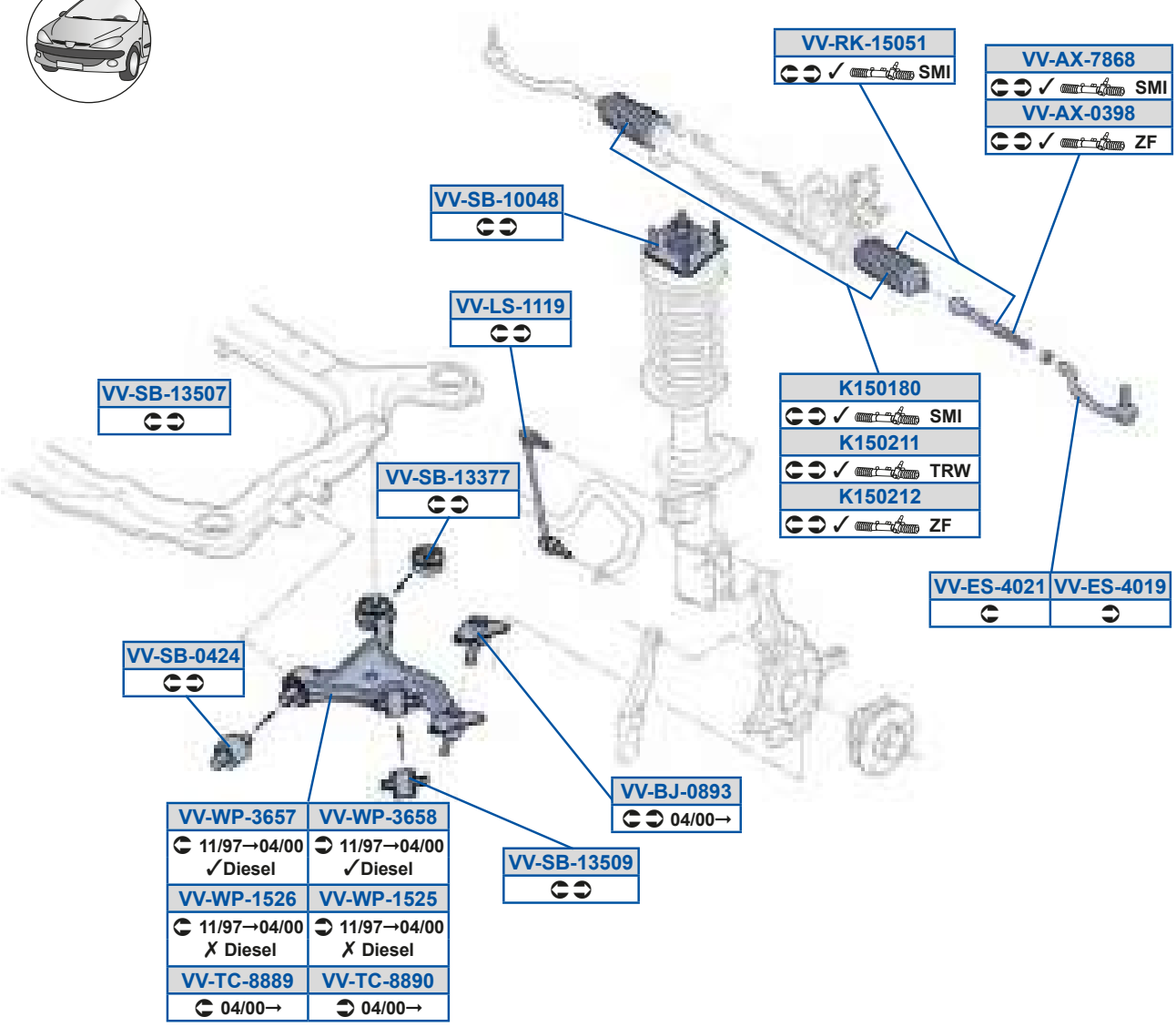
VV-RK-15051
SMI
VV-AX-7868
SMI
VV-AX-0398
ZF
VV-SB-10048
VV-LS-1119
VV-SB-13507
K150180
SMI
K150211
TRW
K150212
ZF
VV-SB-13377
VV-ES-4021
VV-ES-4019
VV-SB-0424
VV-BJ-0893
04/00→
VV-WP-3657
11/97→04/00
✓Diesel
VV-WP-3658
11/97→04/00
✓Diesel
VV-SB-13509
VV-WP-1526
11/97→04/00
✗ Diesel
VV-WP-1525
11/97→04/00
✗ Diesel
VV-TC-8889
04/00→
VV-TC-8890
04/00→

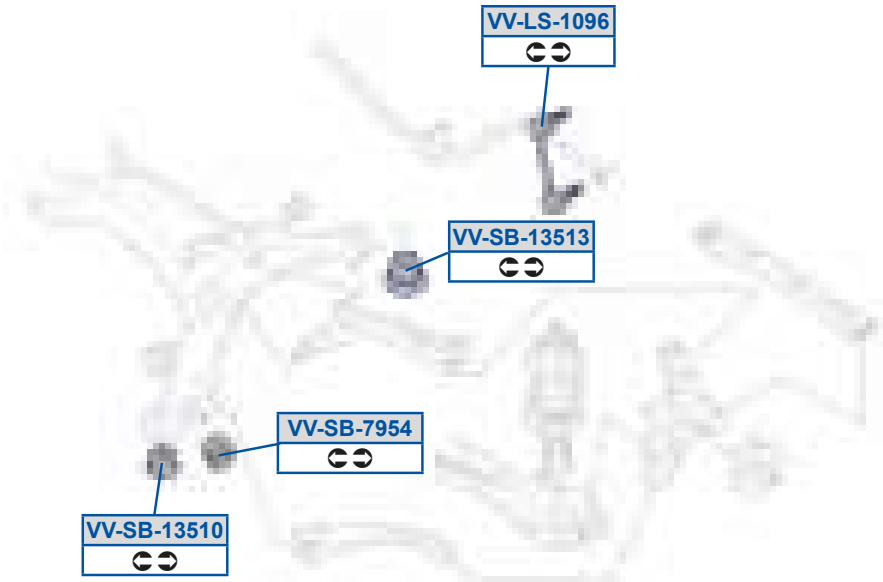
VV-LS-1096
VV-SB-13513
VV-SB-7954
VV-SB-13510

MOOG

Y9C89F8
G8G8B7G

Y9C8>99
9E8D78

Y9C8>9>
9E9B8F

gg5Oi 58AGF
9EBACA

gg5Oi 5EFDF
9EB8EG

gg5PX58FGA
9EB8FD39EB8GA

gg5Sd5B89G
9EB8G939EBAC9

gg5Sd5B8>9
9EB8G839EBAC8

gg5Zd598GD
A7DBEG973A7E8BDEF

gg5Zd5999G
9EBA7A39EBBCD

gg5cY59C8C9
9EB8EG

gg5dP58B>B
GBBAFF93GBDCGE8

gg5dP5988BF
A7E8BGDF3FDABBCE

gg5dP59AAEE
FDA7D7C

gg5dP59AC8E
AC7EG9A

gg5dP59AC8G
A7E8BGEE3A89898G8

gg5dP59AC98
G8CECED

gg5dP59AC9A
G8CEGC93GBDCGEC

gg5dP5EGCB
A7EBFFFG3G9778CB

gg5eQ5FFFG
A7DAC9A83FDBGCBC

gg5eQ5FFG8
A7DAC9A93FDBGCBD

gg5h a59C>C
9E8D9G39E8G79

gg5h a59C>D
9E8D9F39E8G78

gg5h a5ADCE
9E99EA39E9AAD

gg5h a5ADCF
9E999E39E9AAE

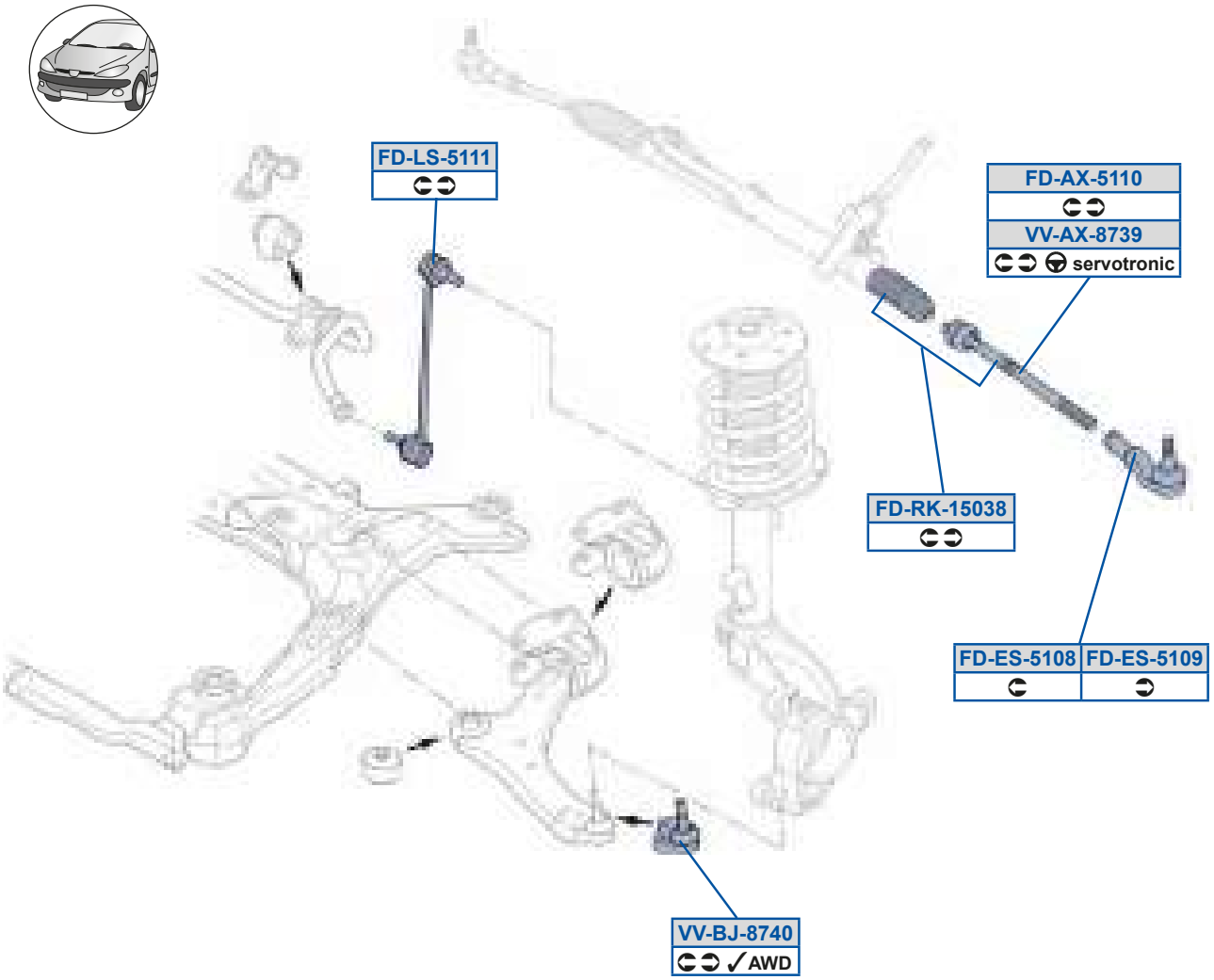
FD-LS-5111
FD-AX-5110
VV-AX-8739
servotronic
FD-RK-15038
FD-ES-5108
FD-ES-5109
VV-BJ-8740
AWD

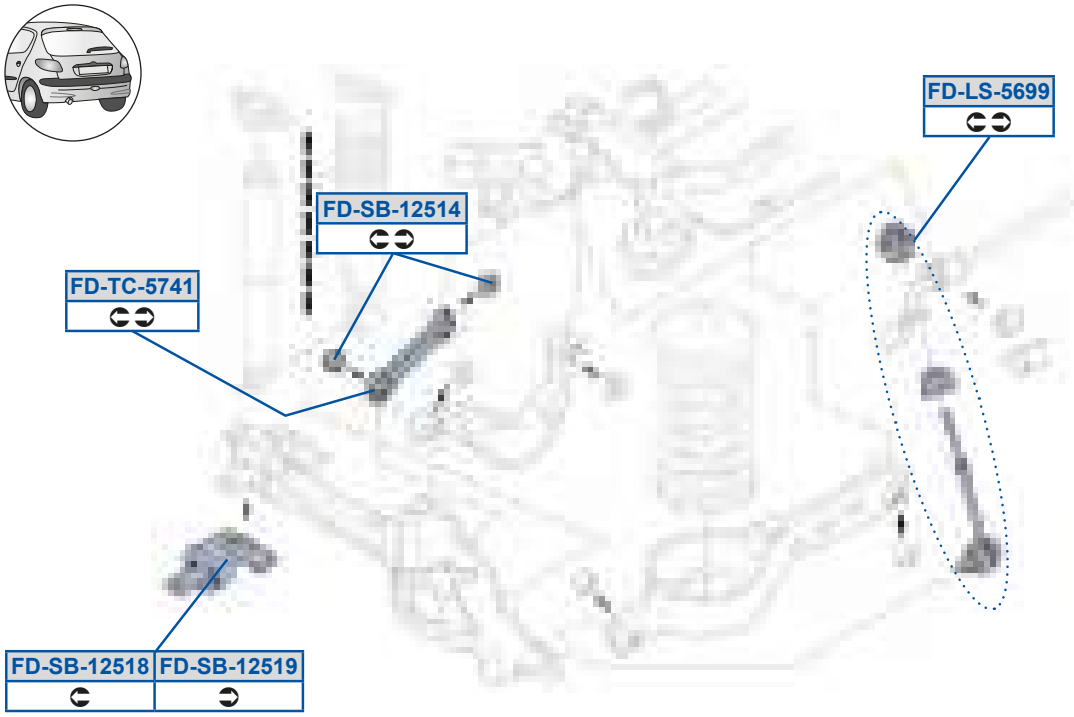
FD-LS-5699
FD-SB-12514
FD-TC-5741
FD-SB-12518
FD-SB-12519

MOOG

TR5Oi 5C998
8BAA9E838CGDCEB

TR5Sd5C98F
A7EED9BG3A89F7777

TR5Sd5C98G
A7EED9BF3A89F7778

TR5Zd5C999
A7DBFBD8

TR5Zd5CDGG
8AEEB8D38B9CFCA

TR5c Y59C8AF
8BAA9E838CGDCEB

TR5dP59>C9B

TR5dP59>C9F
A8AFE9F73A8B7DAAE

TR5dP59>C9G
A8AFE9F83A8B7DAC7

TR5eQ5CEB9

gg5Oi 5FEAG
A7EED9CC3A7EEDB9C

gg5PX5FEB8
A7DFA9BF3A7DFA9BG

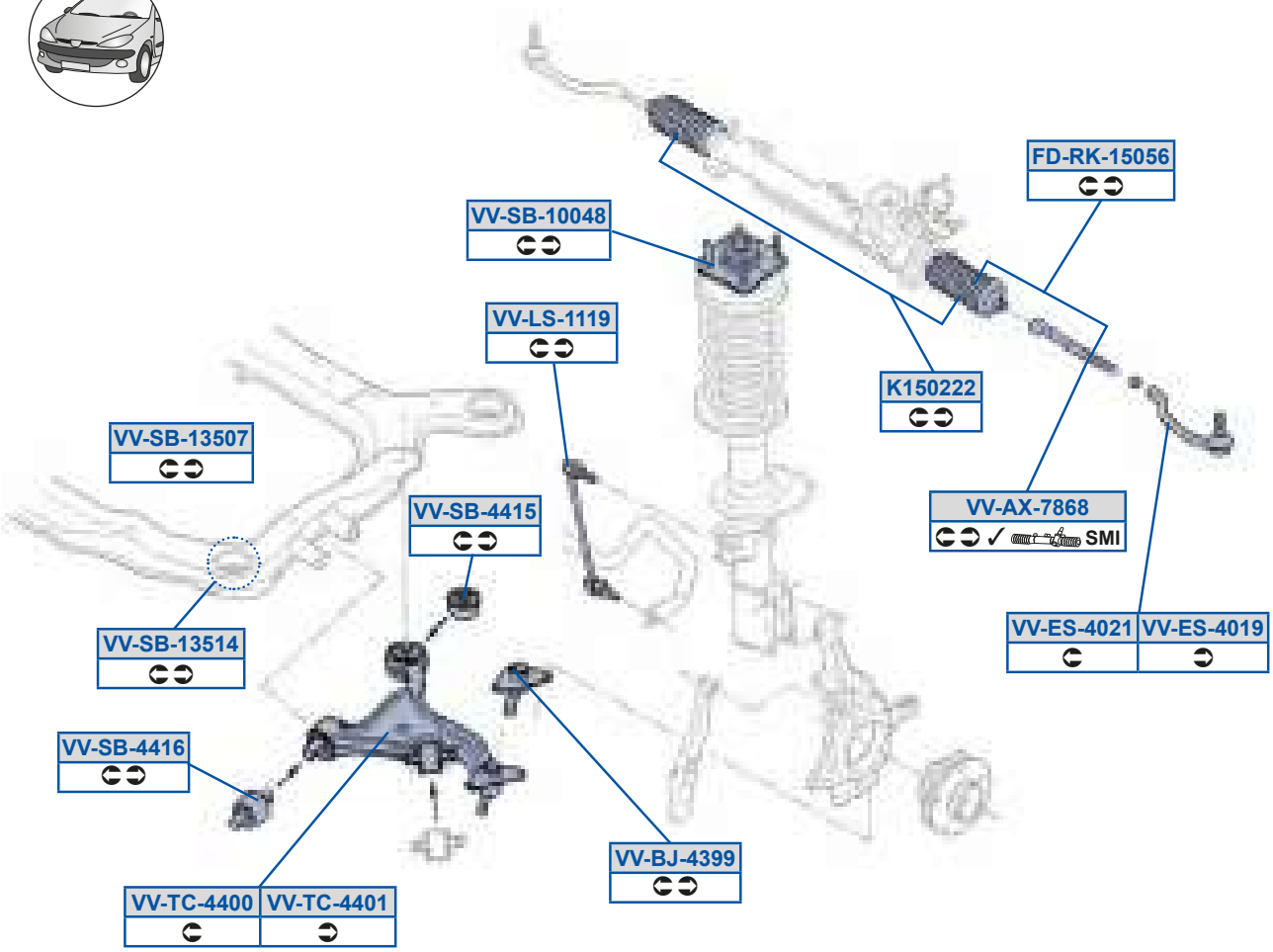
FD-RK-15056
VV-SB-10048
VV-LS-1119
K150222
VV-SB-13507
VV-SB-4415
VV-AX-7868
SMI
VV-ES-4021
VV-ES-4019
VV-SB-13514
VV-SB-4416
VV-BJ-4399
VV-TC-4400
VV-TC-4401

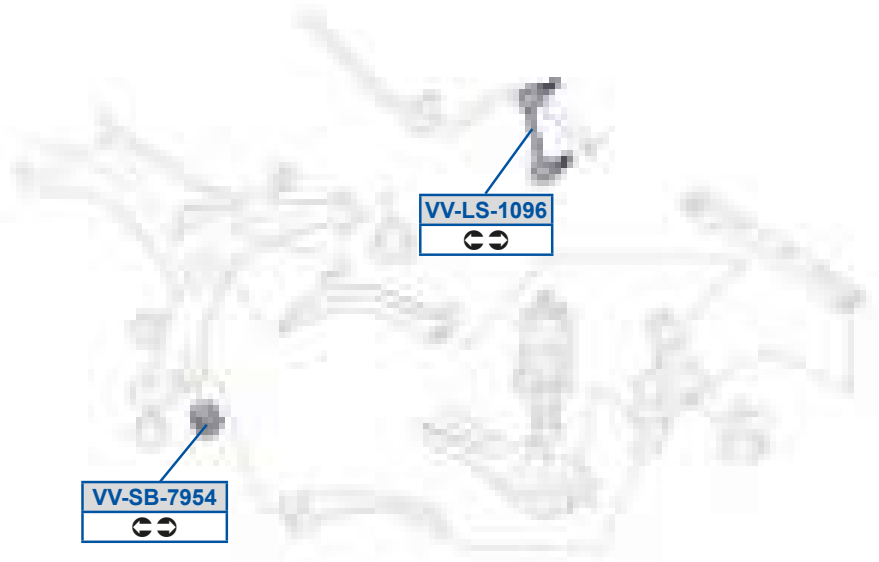
VV-LS-1096
VV-SB-7954

MOOG

Y9C8>>>
9EBACB

gg5dP5988BF
A7E8BGDF3FDABBCE

gg5Oi 5EFDF
9EB8EG

gg5dP59AC8E
AC7EG9A

gg5PX5BAGG
9EBAEE39EBC9A

gg5dP59AC9B
FDEFBGE

gg5Sd5B89G
9EB8G939EBAC9

gg5dP5BB9C
A7DBCFBE3A8A7B7B7

gg5Sd5B8>9
9EB8G839EBAC8

gg5dP5BB9D
A7DAGADF3A89EEFF8

gg5Zd598GD
A7DBEG973A7E8BDEF

gg5dP5EGCB
A7EBFFFG3G9778CB

gg5Zd5999G
9EBA7A39EBBCD

gg5eQ5BB88
A7DAGEF73A7DBCFBC

gg5cY59C8CD
9EB8EG

gg5eQ5BB89
A7DAGEF83A7DBCFBD

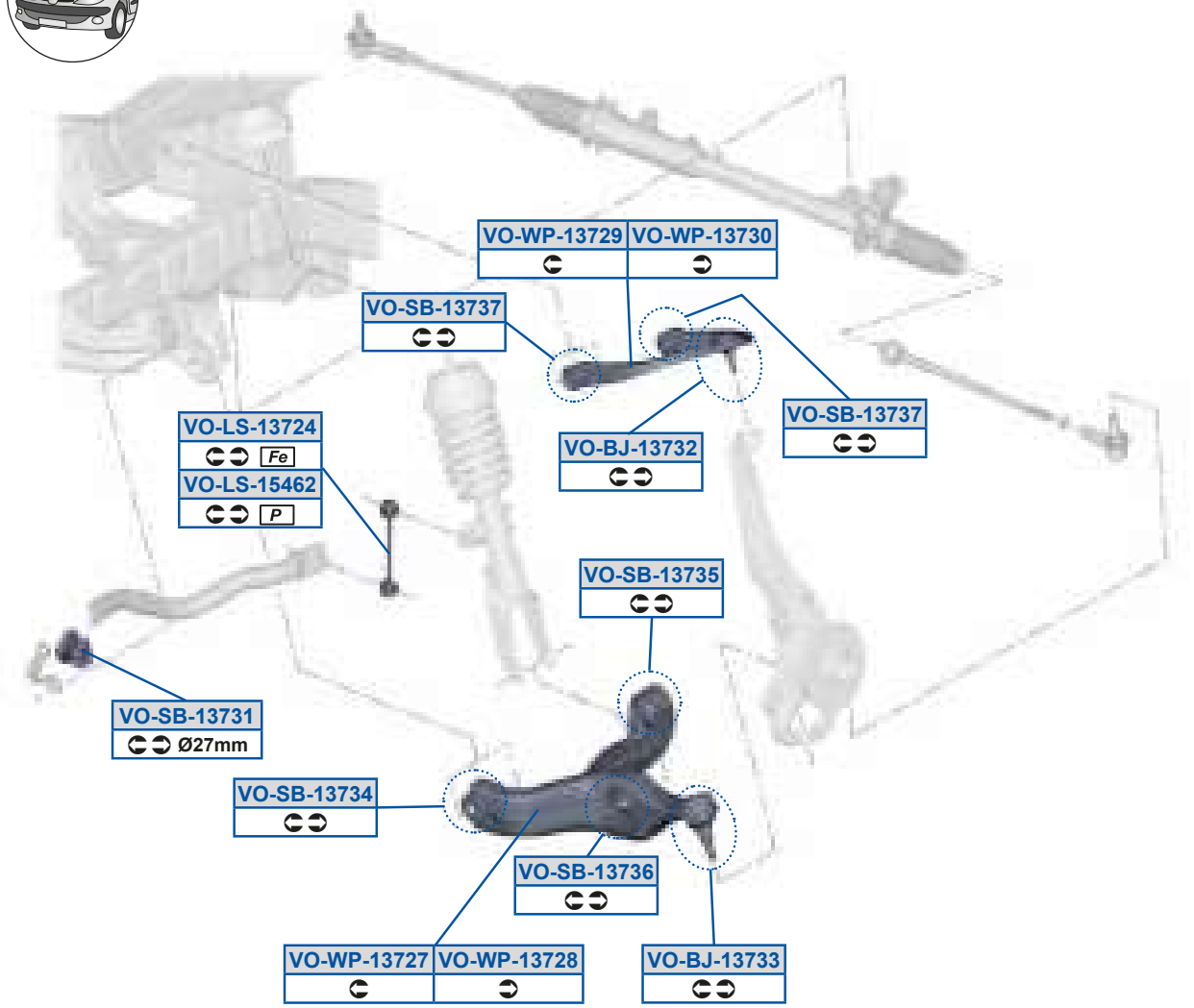
VO-WP-13729
VO-WP-13730
VO-SB-13737
VO-SB-13737
VO-BJ-13732
VO-LS-13724
Fe
VO-LS-15462
P
VO-SB-13735
VO-SB-13731
Ø27mm
VO-SB-13734
VO-SB-13736
VO-WP-13727
VO-WP-13728
VO-BJ-13733

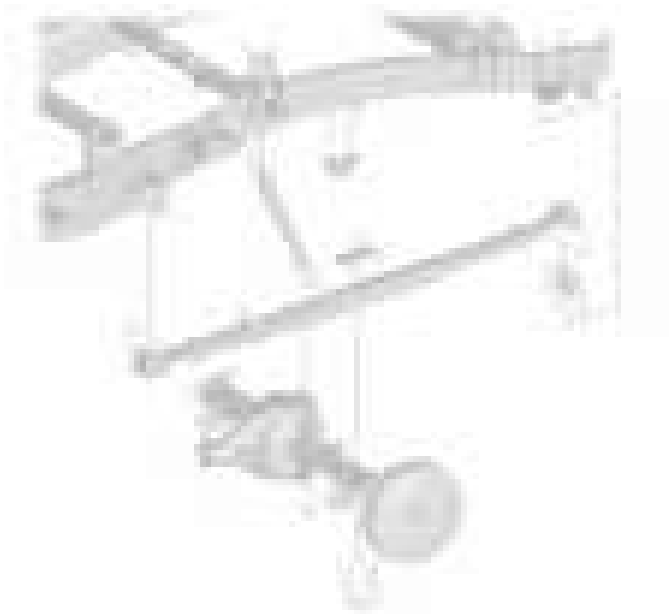

g_ 5PX59AEA>
9V7B7E798P /40

g_ 5dP59AEAE
9V7B7E7EE0

g_ 5PX59AEAA
9V7B7E8C8039V7B7E8C90

g_ 5h a59AE>E
9V7B7E8C80

g_ 5Zd59AE>B
9V7B88A8E

g_ 5h a59AE>F
9V7B7E8C90

g_ 5Zd59CBD>
9V7B88A8EP

g_ 5h a59AE>G
9V7B7E798P

g_ 5dP59AEA9
9V7B88A8AP39V7B88A8AQ

g_ 5h a59AEA8
9V7B7E799P

g_ 5dP59AEAB
9V7B7E8FA0

g_ 5dP59AEAC
9V7B7E8F90

g_ 5dP59AEAD
9V7B89AAA0

Pvv éy

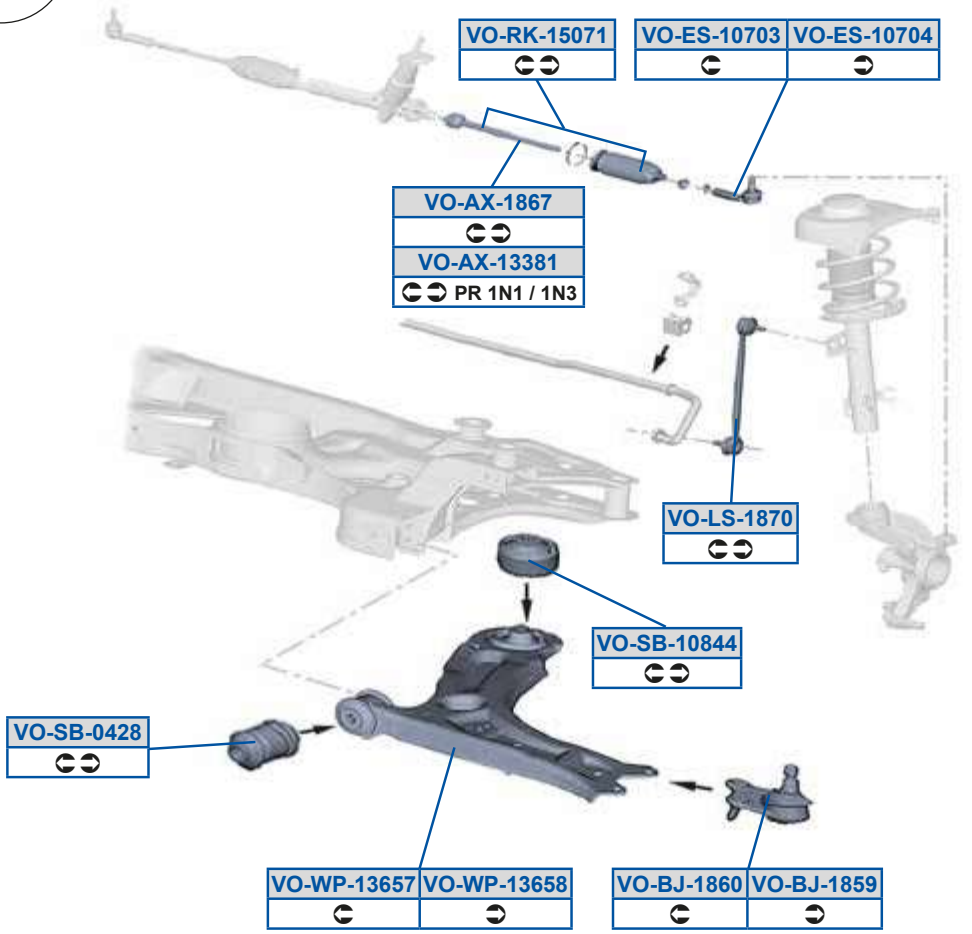

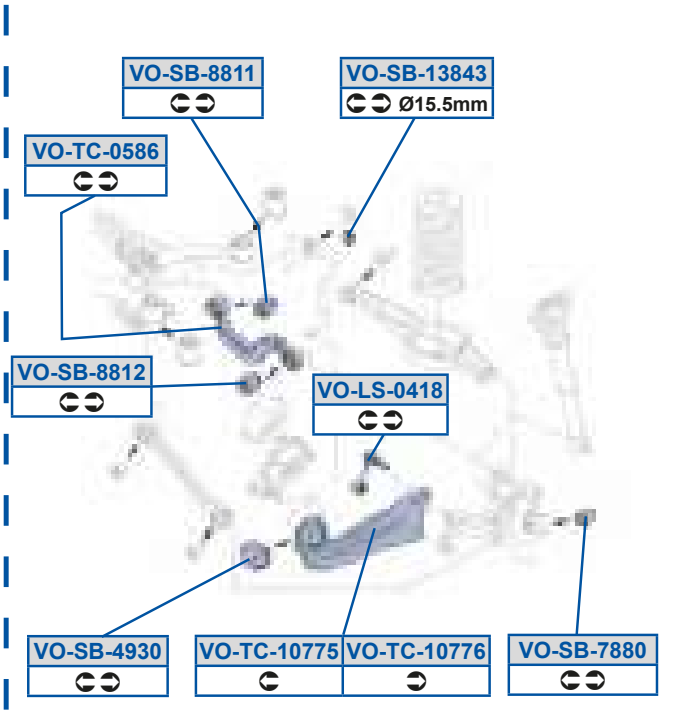

gh

MOOG

g_ 5Oi 59AAF9
CD8B9AF87

g_ 5c Y59C8E9
8Y7B9AF87O

g_ 5e Q58CFD
8Y7C7CA9AV38Y7C7CA9Ad

g_ 5Oi 59FDE
8Y7B9AF87O

g_ 5d P58B>F
8Y7B7E8F938Y7B7E8F9O

g_ 5e Q598EEC
8Y7C7C99AS38Y7C7C99AV

g_ 5P X59FCG
8Y7B7EADDP38Y7B7EADDQ

g_ 5d P598FBB
8Y7B7E8FAa 38Y7B7E8FAi

g_ 5e Q598EED
8Y7C7C99BS38Y7C7C99BV

g_ 5P X59FD8
8Y7B7EADCP38Y7B7EADCQ

g_ 5d P59AFBA
8Y7C88A9EPO

g_ 5h a59ADCE
CD8B7E8C8O3CD8B7E8C8Q

g_ 5Sd598E8A
8Y7B9AF88O38Y7B9AF88Q

g_ 5d P5BGA8
8Y7C7CCB8Q38Y7C7CCB8R

g_ 5h a59ADCF
CD8B7E8C9O3CD8B7E8C9Q

g_ 5Sd598E8B
8Y7B9AF89O38Y7B9AF89Q

g_ 5d P5EFF8
8Y7C7CCCA38Y7C7CCCAO

g_ 5Zd58B9F
8Y7C7CBDCOO38Y7C7CBDCQ

g_ 5d P5FF99
8Y7C7C9EGO

g_ 5Zd59FE8
8Y7B88A8CP38Y7B88A8CX

g_ 5d P5FF9>
8Y7C7C97AO

gh

P_c0	8978E	P_c0 09X; 1	987GF 8G78C
P_c0 gt ét 09XD1	8C7GG 8C78C		

VO-SB-14966	Ø10mm
VO-SB-14628	Ø15mm
VO-SB-6818	Ø17mm
VO-SB-13250	Ø19mm
VO-SB-7422	Ø20mm
AU-SB-4847	Ø21mm
VO-SB-6796	Ø23mm

VO-SB-10053

VO-ES-1507 | VO-ES-1506

VO-AX-13741

K150182 — ✗ 1.6FSi
K150231 — ✓ 1.6FSi

VO-RK-15052 — ✗ 1.6FSi
VO-RK-15061 — ✓1.6FSi

VO-DS-1549 | VO-DS-1548

VO-SB-4523

VO-SB-1369

VO-WP-1553 | VO-WP-1552

VO-BJ-8287 | VO-BJ-8288

VO-LS-0475 — Fe, 105mm Ø23mm ✗ 4 Motion
VO-LS-4916 — ✓ P Ø21mm
VO-LS-7327 — ✓ P Ø23mm

VO-SB-1329

VO-LS-2406 — Fe ✓ 4 Motion 336mm
VO-LS-0456 — Fe ✓ 4 Motion 336mm

VO-RK-4853 — ❶+❷+❸+❹ ✗ 4 Motion

✗ 4Motion

VO-SB-10063

✓ 4Motion

VO-SB-10130

VO-LS-3680
AU-LS-4193

VO-SB-10179

VO-SB-0042 — Ø72mm
VO-SB-4857 — Ø69mm

VO-SB-10131

MOOG

Of 5Zd5B9GA
8X7C7CBDDQ

g_ 5Rd59CBG
8X7B99F7A038X7B99F7AP

g_ 5Zd5EA>E
8X7B88A8CV38X7B88A8CY

g_ 5dP5989A9
8X7C7C8E8P

Of 5dP5BFBE
8X7B88A8BQ

g_ 5Sd59C8D
8X7B99F89P38X7B99F89S

g_ 5c Y59C8C>
8X7B99F7AP38X7B99F7EP

g_ 5dP5989EG
8X7C7C97A38X7C7CADCR

Y9C89F>
8X7B99FA838X7B99FA8P

g_ 5Sd59C8E
8X7B99F88P38X7B99F88S

g_ 5c Y59C8D9
8X7B99F7AP38X7B99F7EP

g_ 5dP59A>C8
8X7B88A8Bn

Y9C8>A9
8X7B99FA8P

g_ 5Zd58BCD
8X7B88A8DR

g_ 5c Y5BFCA

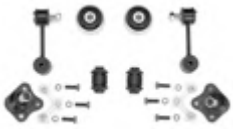

g_ 5dP59A>G
8G8B7E8F93ACEB7E8F9

g_ 5Oi 59AEB9
8X7B99F7AP38X7B99F7BP

g_ 5Zd58BEC
8X7B88A8C38X7B88A8CP

g_ 5dP588B>
8X7C78CB8Q

g_ 5dP59ADG
8X7B7E8F838X7B7E8F8O

g_ 5PX5F>FE
8X7B7EADC038X7B7EADCP

g_ 5Zd5>B8D
8X7B88A8CR

g_ 5dP5988CA
8V7B89ADC038X7B899BG

g_ 5dP59BD>F
8X7B88A9E

g_ 5PX5F>FF
8X7B7EADD038X7B7EADDP

g_ 5Zd5ADF8
8X7C7CBDDP

g_ 5dP5988DA
8X7C8AACAP38X7C8AACAQ

g_ 5dP59BGDD
FR7C88A9EQ

g_ 5Rd59CBF
8X7B99F7B038X7B99F7BP

g_ 5Zd5BG9D
8X7B88A8C38X7B88A8CP

g_ 5dP5989A8
8X7C7C8BC038X7C7C8BCP

g_ 5dP5BC>A
8X78GGB9G

P r

gh

gh

P_c0	8978E	P_c0 09X; 1	987GF 8G78C
P_c0 gt ét 09XD1	8C7GG 8C78C		

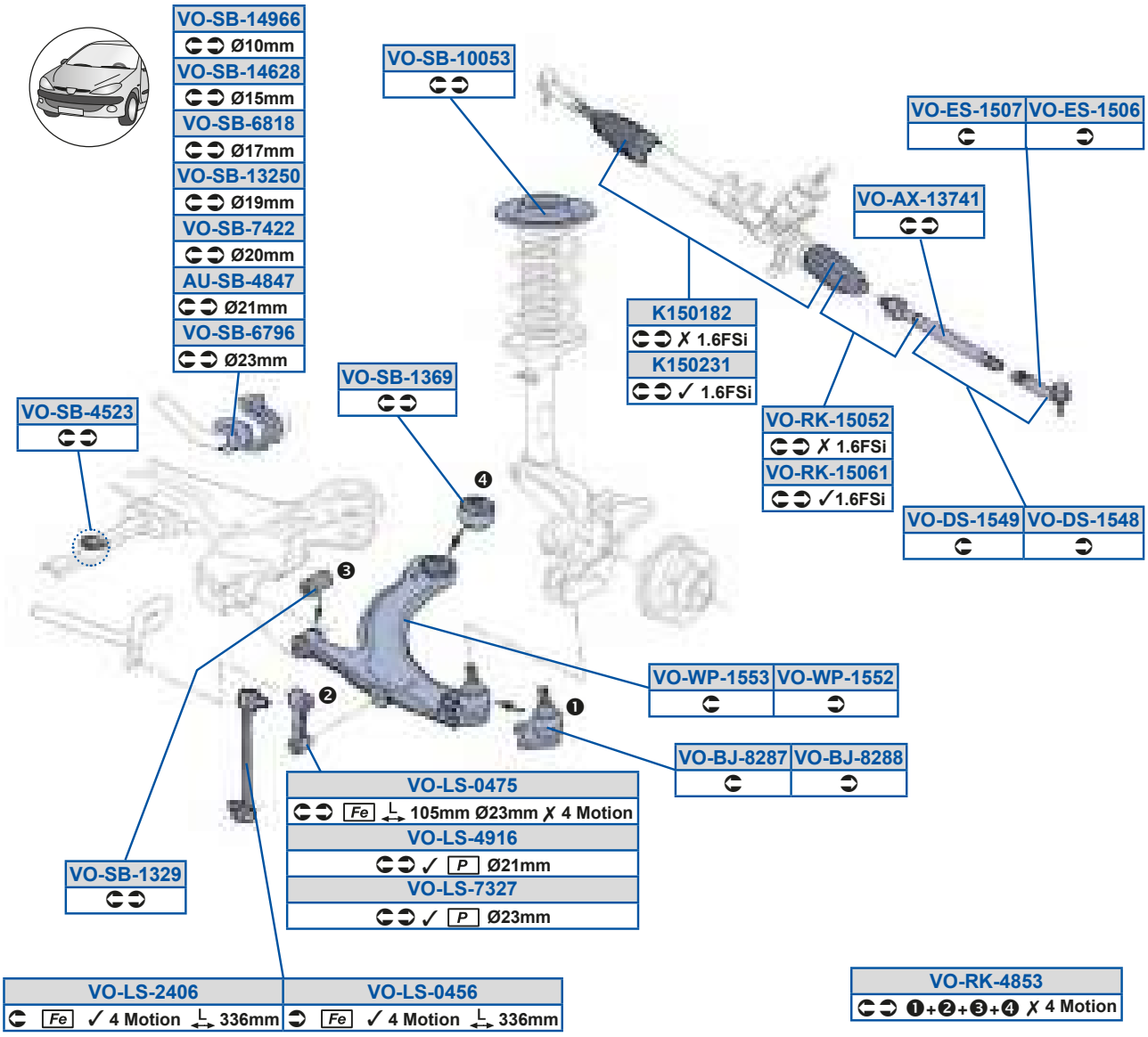

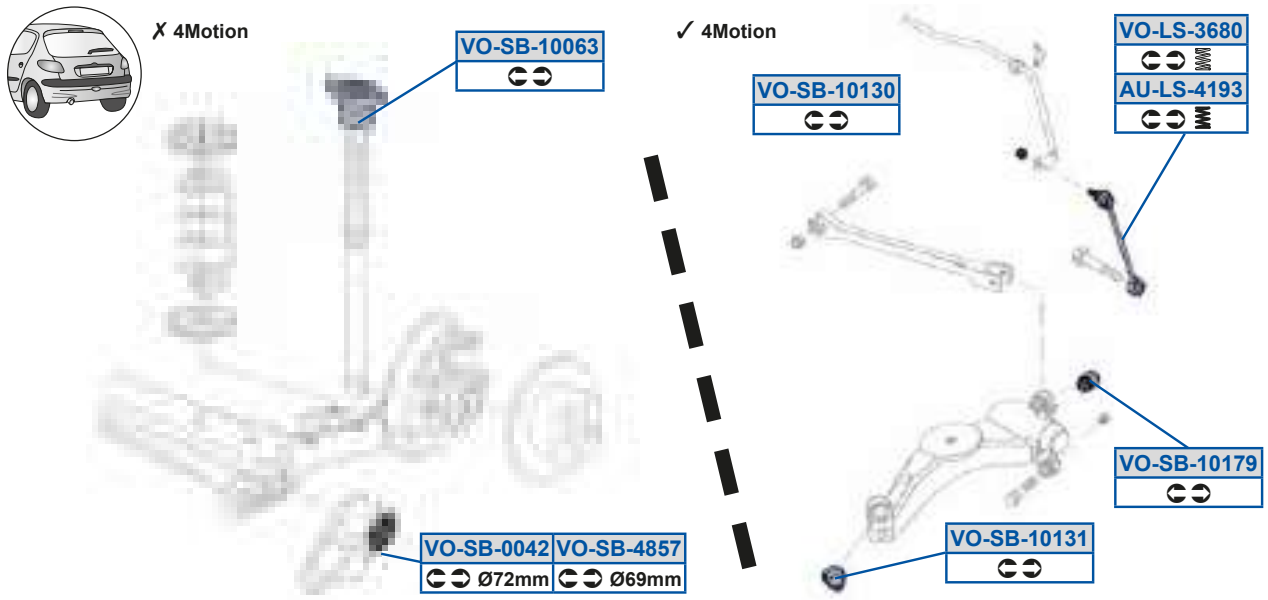

MOOG

g_ 5dP5BFCE
8X7C78CB8R

g_ 5dP5DEGD
8X7B88A8BU38X7B88A8Bt

g_ 5dP5DF9F
8X7B88A8B38X7B88A8Bo

g_ 5dP5EB>>
8X7B88A8Bi

g_ 5h a59CC>
8X7B7E8C8038X7B7E8C8P

g_ 5h a59CCA
8X7B7E8C8038X7B7E8C8P

gh

QORRk WWP 0GYGO1	997GC 8978B	QORRk WWaév 0Gf E1	8D7GD 9; 788
QORRk Wwgt ét 0GYGP1	997GC 8978B		

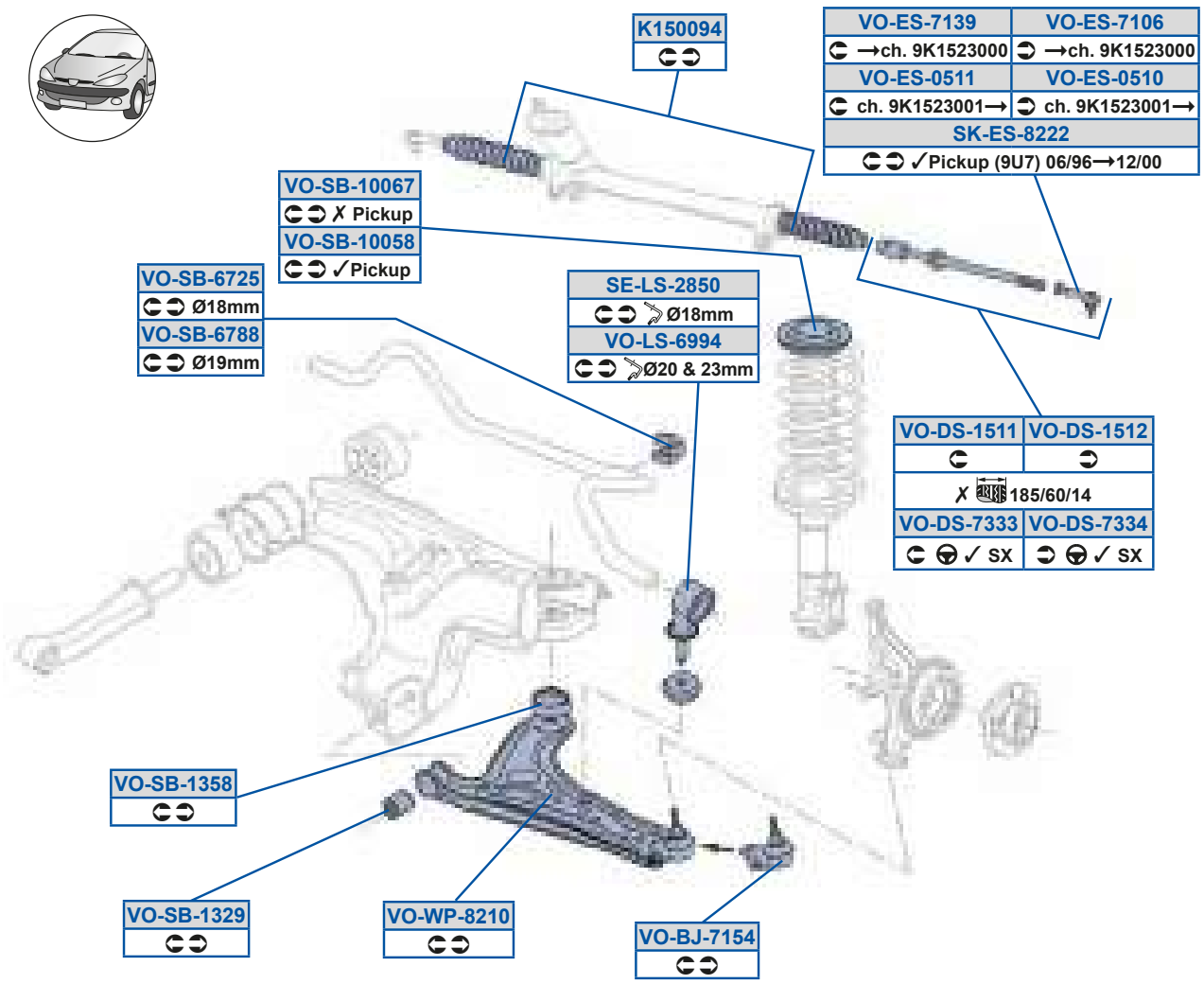

MOOG

Y9C88GB
8V7B99FA8P3ACEB99FA8O

g_ 5Sd58C98
DS7B8GF883DS7B8GF89

g_ 5dP59ACF
8G8B7E8F838G8B7E8F8O

dS5Zd5>FC8
8G8B88A8CO

g_ 5Sd58C99
DS7B8GF883DS7B8GF89

g_ 5dP5DE>C
8G8B88A8B

dY5Sd5F>>>
88CC77BB73Du7B99F88

g_ 5Sd5E98D
8G8B8GF893AO7B99F89

g_ 5dP5DEFF
8V7B88A8B

g_ 5PX5E9CB
ACEB7EADC3ACEB7EADCO

g_ 5Sd5E9AG
8G8B8GF883AO7B99F88

g_ 5h a5F>98
8G8B7E8C8P38G8B7E8CA

g_ 5Rd59C99
DY7B99F7AO3DY7B99F7AR

g_ 5Zd5DGGB
DY7B88A8C

g_ 5Rd59C9>
DY7B99F7AR3DY7B99F7BO

g_ 5dP5988CF
F9AB89ACC

g_ 5Rd5EAAA
DY7B99F7AP3DY7B99F7AS

g_ 5dP5988DE
8X7B899BG3ACEB899BG

g_ 5Rd5EAAB
DY7B99F7BP3DY7B99F7BS

g_ 5dP59A>G
8G8B7E8F93ACEB7E8F9

QORRk WWP Q YO4; YV4; QO4; QV1	8A78B 8C79C	QORRk WWgt ć Q YP4; YX4; QP4; QX1	8A78B 8C79C

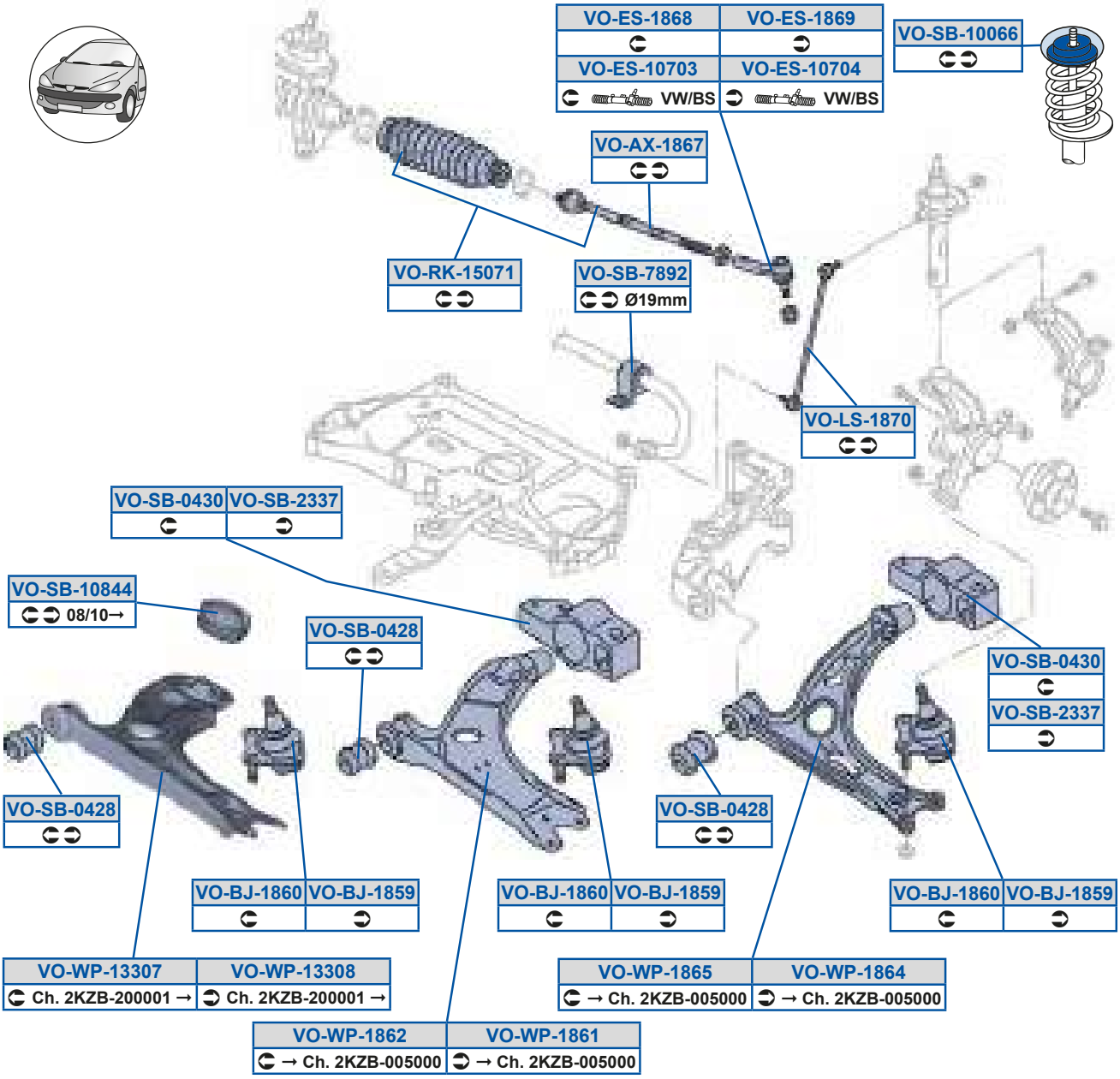

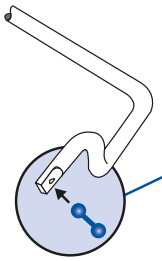

VO-LS-3980

MOOG

g_ 5Oi 59FDE
8Y7B9AF87O

g_ 5Zd5AGF8
9Y7C7CBDCP39Y7C7CBDCQ

g_ 5h a59AA8E
8Y7B7E8C8PP38Y7B7E8C8PS

g_ 5PX59FCG
8Y7B7EADDP38Y7B7EADDQ

g_ 5c Y59C8E9
8Y7B9AF87O

g_ 5h a59AA8F
8Y7B7E8C9PP38Y7B7E8C9PS

g_ 5PX59FD8
8Y7B7EADCP38Y7B7EADCQ

g_ 5dP58B>F
8Y7B7E8F938Y7B7E8F9O

g_ 5h a59FD9
8Y7B7E8C9OO38Y7B7E8C9OS

g_ 5Sd598E8A
8Y7B9AF88O38Y7B9AF88Q

g_ 5dP58BA8
8Y78GG9A8U38Y78GG9A8X

g_ 5h a59FD>
8Y7B7E8C8OO38Y7B7E8C8OS

g_ 5Sd598E8B
8Y7B9AF89O38Y7B9AF89Q

g_ 5dP5988DD
8Y7B899BGP3Dd7B899BGQ

g_ 5h a59FDB
8Y7B7E8C9OQ38Y7B7E8C9a

g_ 5Sd59FDF
8Y7B9AF88O38Y7B9AF88P

g_ 5dP598FBB
8Y7B7E8FAa 38Y7B7E8FAi

g_ 5h a59FDC
8Y7B7E8C8OQ38Y7B7E8C8a

g_ 5Sd59FDG
8Y7B9AF89O38Y7B9AF89P

g_ 5dP5>AAE
8Y78GG9A9U38Y78GG9A9X

g_ 5Zd59FE8
8Y7B88A8CP38Y7B88A8CX

g_ 5dP5EFG>
9Y7C88B8AO39Y7C88B8AQ

gh

Qc0TeSc A85AC P Q Sr 1	8B78D 9; 79D	Qc0TeSc A85C8 P Q Sr 1	8B78D 9; 79D
Qc0TeSc A85C8 a t y 7QÉt é Q Tr 1	8B78D 9; 79D		

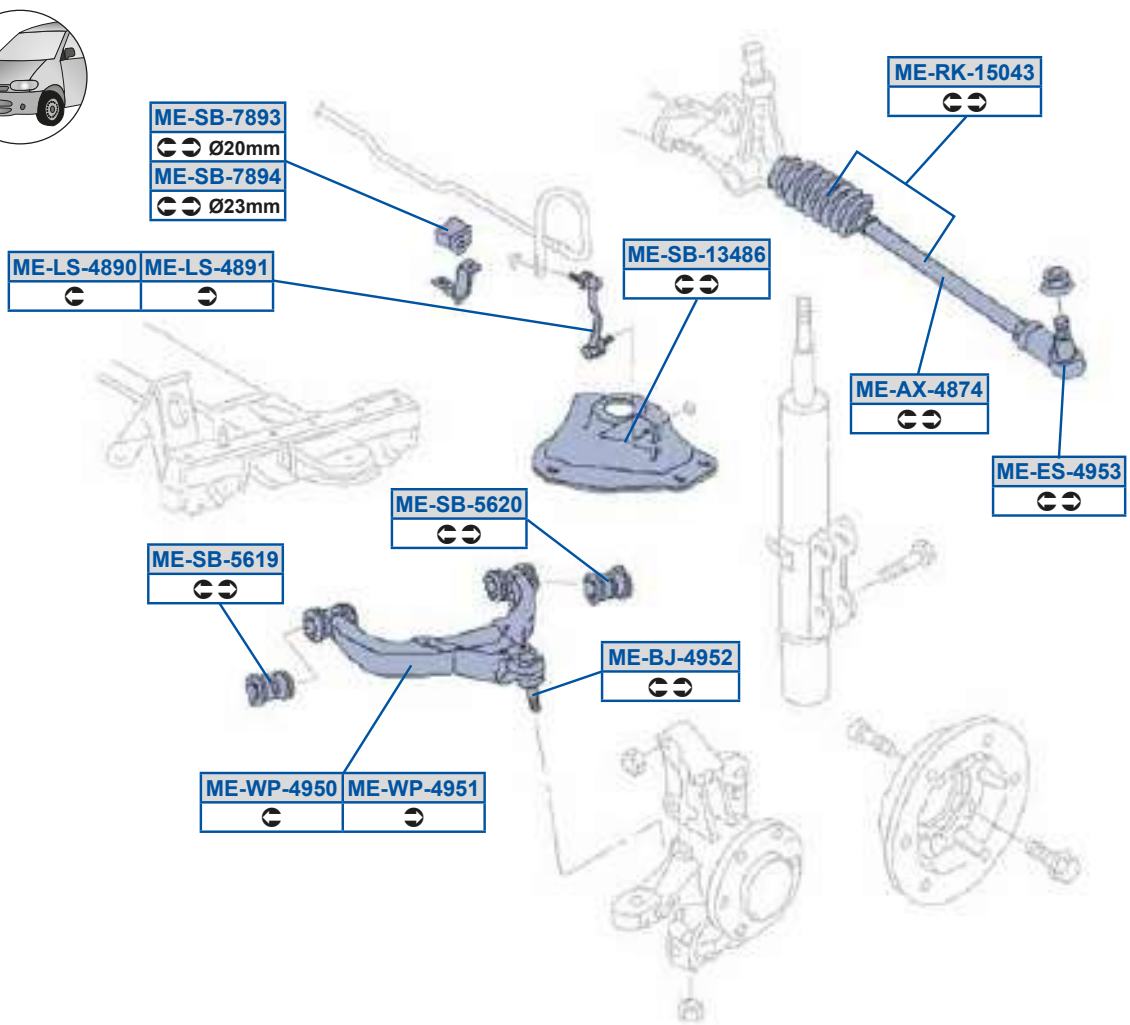

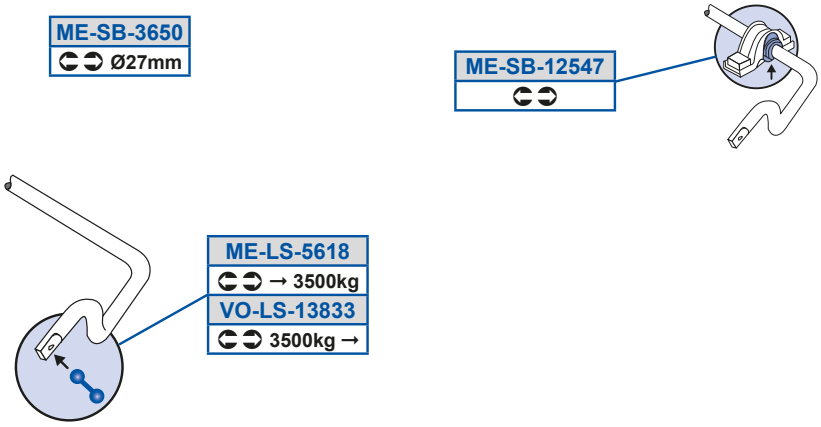

[S5Oi 5BFEB
9S7E8ABG8

[S5dP59ABFD
9S7 B7E 8F8 Q

g_ 5Zd59AFAA
9S7C887C8U

[S5PX5BGC>
9S7B7E8C8Z39S7B7E8C8a

[S5dP5ADC8
9R7C88B8A

[S5Sd5BGCA
9S7BGF87B39S7BGF87BO

[S5dP5CD9G
9S7B7EC9A

[S5Zd5BFG8
9S7B88A8EQ

[S5dP5CD>8
9S7B7EC9AO

[S5Zd5BFG9
9S7B88A8FQ

[S5dP5EFGA
9S7B887B8Q

[S5Zd5CD9F
9S7C887C8T

[S5dP5EFGB
9S7B7EBEAS

[S5cY59C8BA
9S7E8ABG8

[S5ha5BGC8
9S7B7E8C8a

[S5dP59>CBE
9S7C88B8AU

[S5ha5BGC9
9S7B7E8C9Z39S7B7E8C9a

Q r ww 08B7>88D5L1l>Sp 5>Tpn

gh

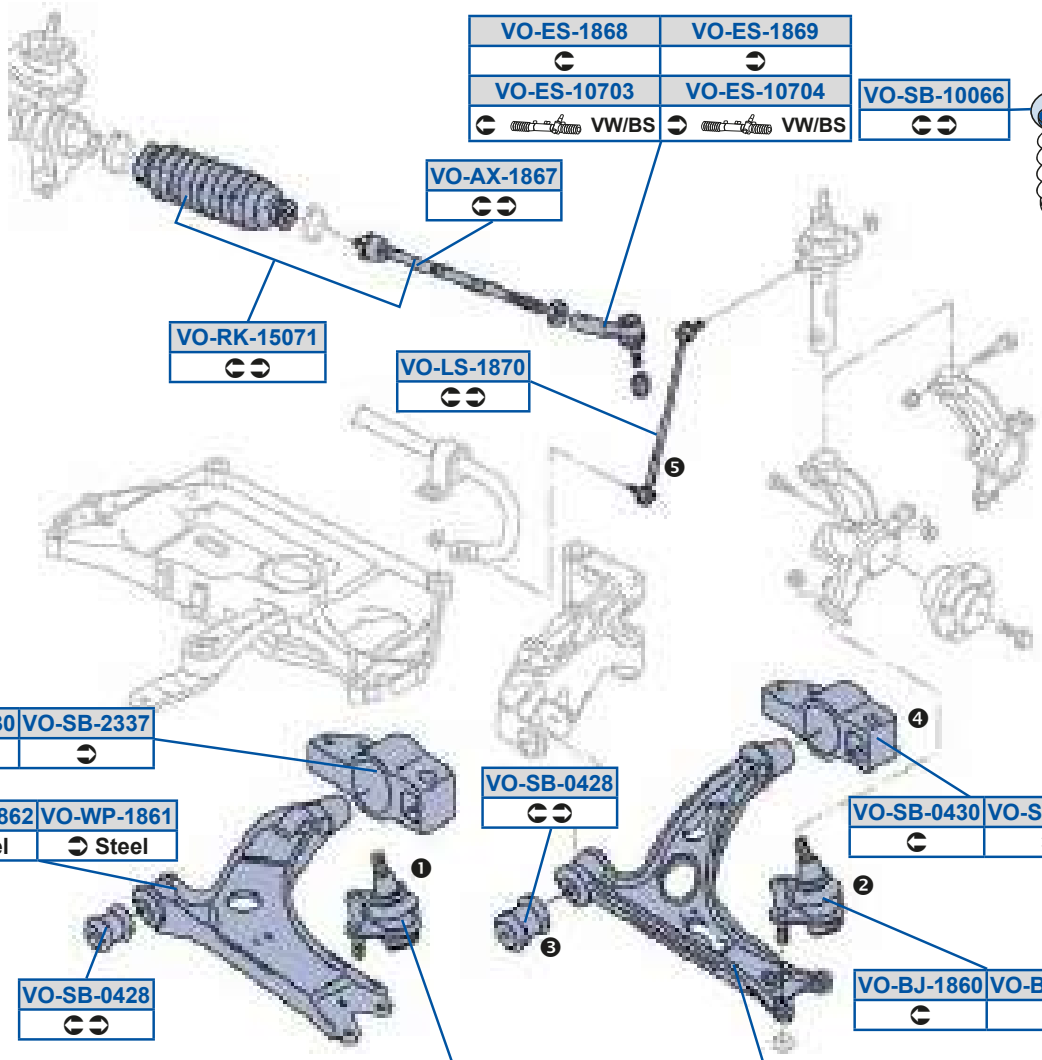
VO-ES-1868
VO-ES-1869
VO-ES-10703
VO-ES-10704
VW/BS
VW/BS
VO-SB-10066
VO-AX-1867
VO-RK-15071
VO-LS-1870
VO-SB-0430
VO-SB-2337
VO-WP-1862
VO-WP-1861
Steel
Steel
VO-SB-0428
VO-SB-0428
VO-SB-0430
VO-SB-2337
VO-BJ-1860
VO-BJ-1859
VO-RK-6606
❶+❷+❸+❹+❺
VO-BJ-1860
VO-BJ-1859
VO-WP-1865
VO-WP-1864
Cast Iron
Cast Iron

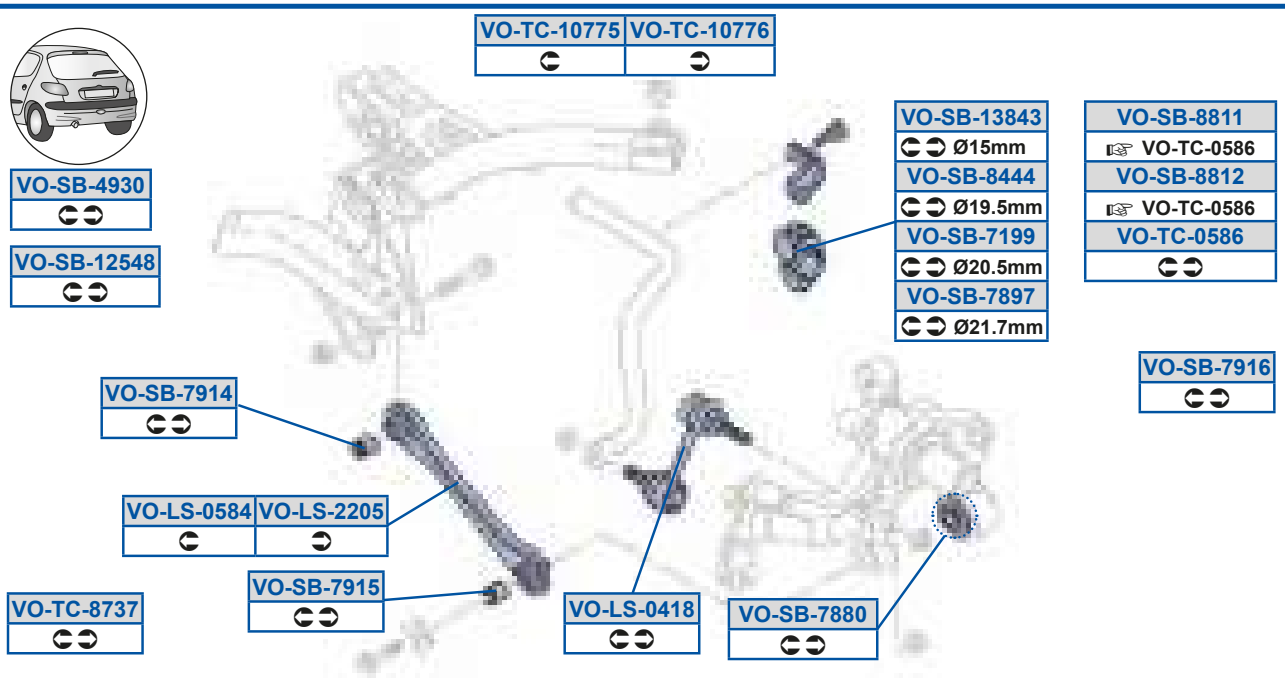
VO-TC-10775
VO-TC-10776
VO-SB-4930
VO-SB-12548
VO-SB-13843
Ø15mm
VO-SB-8444
Ø19.5mm
VO-SB-7199
Ø20.5mm
VO-SB-7897
Ø21.7mm
VO-SB-8811
VO-TC-0586
VO-SB-8812
VO-TC-0586
VO-TC-0586
VO-SB-7916
VO-SB-7914
VO-LS-0584
VO-LS-2205
VO-SB-7915
VO-TC-8737
VO-LS-0418
VO-SB-7880

g_ 5Oi 59FDE
8Y7B9AF87O

g_ 5Zd58CFB
8Y7C78C9GS38Y7C78C9GT

g_ 5dP59>CBF
8Y7C7CCCA38Y7C7CCCAO

g_ 5dP5EG9C
8Y7C7CCBAO

g_ 5PX59FCG
8Y7B7EADDP38Y7B7EADDQ

g_ 5Zd59FE8
8Y7B88A8CP38Y7B88A8CX

g_ 5dP59AFBA
8Y7C88A9EPO

g_ 5dP5EG9D
8Y7C7C8E8Q38Y7C7C8EAQ

g_ 5PX59FD8
8Y7B7EADCP38Y7B7EADCQ

g_ 5Zd5>>8C
8Y7C78CA7P38Y7C78CA7Q

g_ 5dP5>AAE
8Y78GG9A9U38Y78GG9A9X

g_ 5dP5FBBB
8Y7C88A9EOI

g_ 5Sd598E8A
8Y7B9AF88O38Y7B9AF88Q

g_ 5c Y59C8E9
8Y7B9AF87O

g_ 5dP5BGA8
8Y7C7CCB8Q38Y7C7CCB8R

g_ 5dP5FF99
8Y7C7C9EGO

g_ 5Sd598E8B
8Y7B9AF89O38Y7B9AF89Q

g_ 5c Y5DD8D

g_ 5dP5E9GG
8Y7C88A9EOn

g_ 5dP5FF9>
8Y7C7C97AO

g_ 5Sd59FDF
8Y7B9AF88O38Y7B9AF88P

g_ 5dP58B>F
8Y7B7E8F938Y7B7E8F9O

g_ 5dP5EFF8
8Y7C7CCCA38Y7C7CCCAO

g_ 5eQ58CFD
8Y7C7CA9AV38Y7C7CA9Ad

g_ 5Sd59FDG
8Y7B9AF89O38Y7B9AF89P

g_ 5dP58BA8
8Y78GG9A8U38Y78GG9A8X

g_ 5dP5EFGE
8Y7C88A9EOo

g_ 5eQ598EEC
8Y7C7C99AS38Y7C7C99AV

g_ 5Zd58B9F
8Y7C7CBDCO038Y7C7CBDCQ

g_ 5dP5988DD
8Y7B899BGP3Dd7B899BGQ

g_ 5dP5EG9B
8Y7C78CB8Q

g_ 5eQ598EED
8Y7C7C99BS38Y7C7C99BV

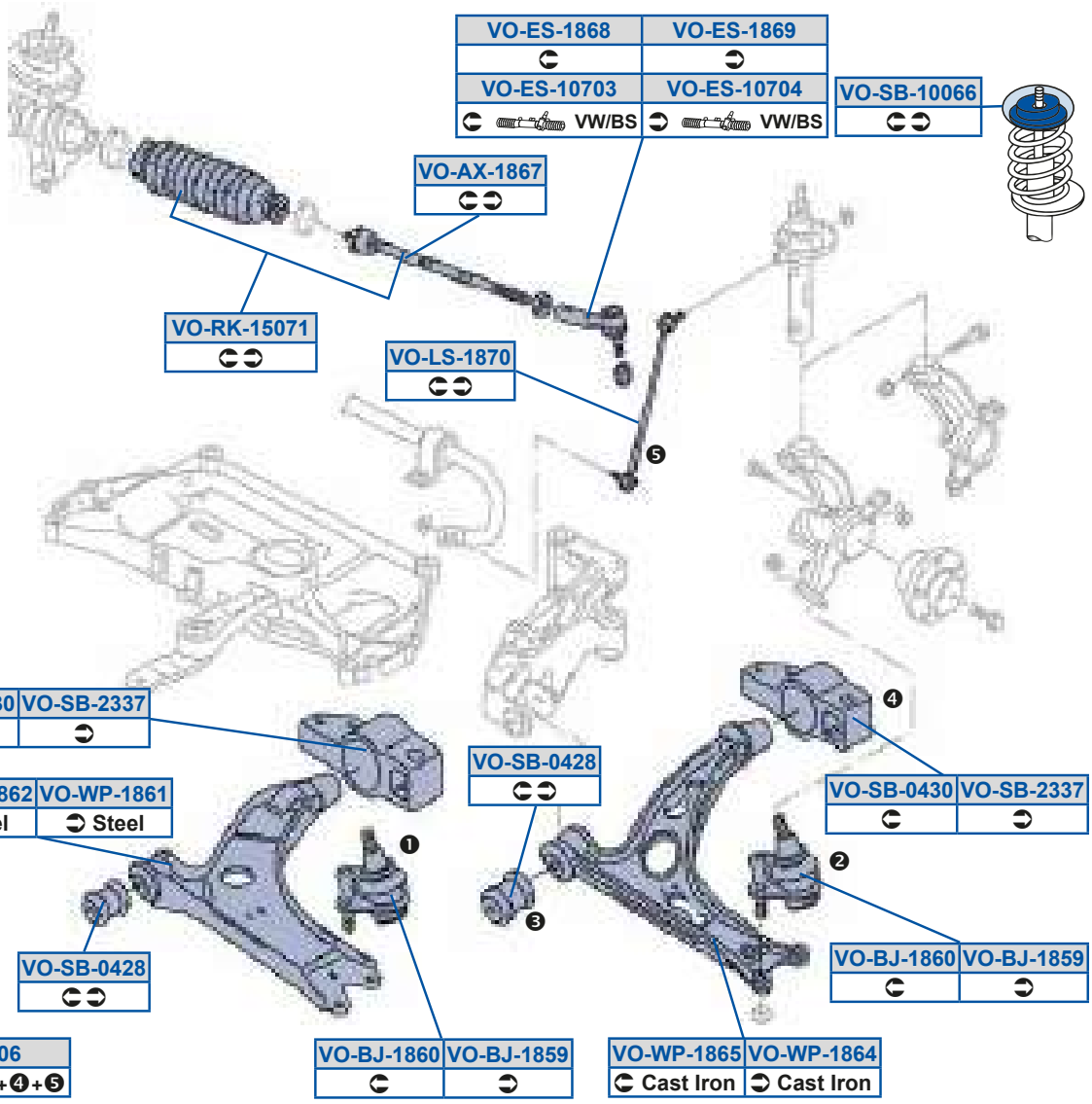
VO-ES-1868
VO-ES-1869
VO-ES-10703
VW/BS
VO-ES-10704
VW/BS
VO-SB-10066
VO-AX-1867
VO-RK-15071
VO-LS-1870
❺
VO-SB-0430
VO-SB-2337
VO-WP-1862
Steel
VO-WP-1861
Steel
VO-SB-0428
❶
VO-SB-0428
❸
❹
VO-SB-0430
VO-SB-2337
❷
VO-BJ-1860
VO-BJ-1859
VO-SB-0428
VO-RK-6606
❶+❷+❸+❹+❺
VO-BJ-1860
VO-BJ-1859
VO-WP-1865
Cast Iron
VO-WP-1864
Cast Iron

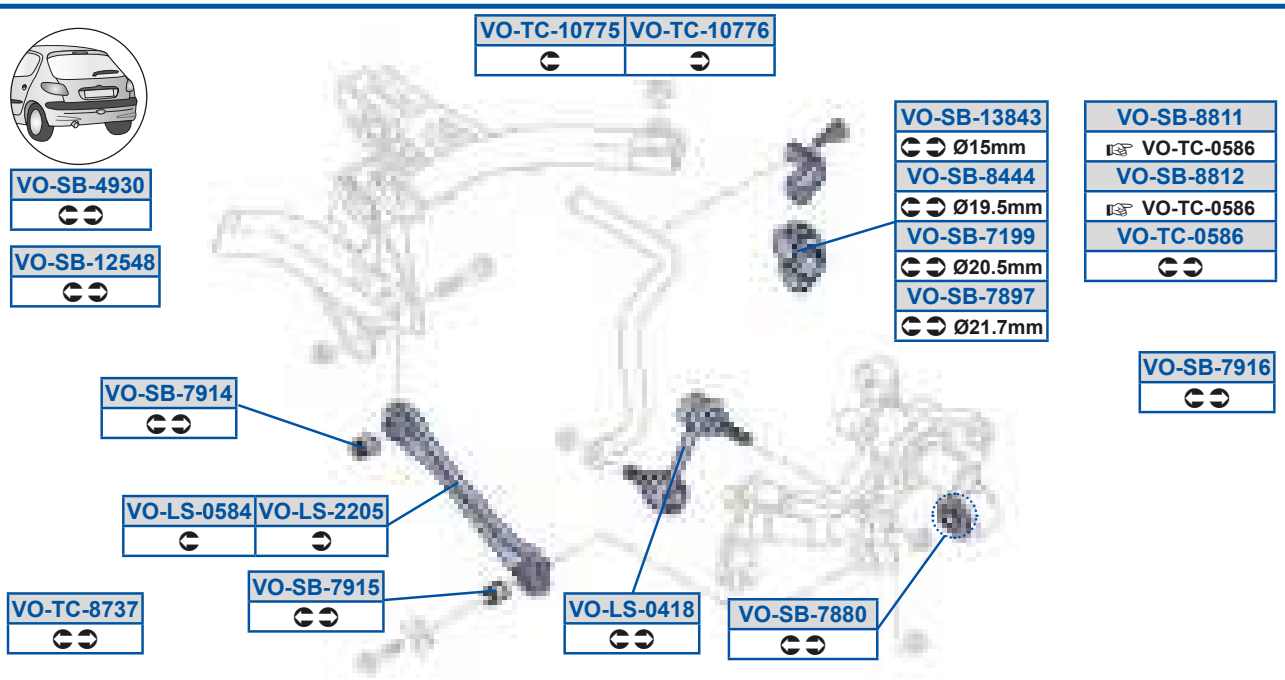
VO-TC-10775
VO-TC-10776
VO-SB-4930
VO-SB-12548
VO-SB-13843
Ø15mm
VO-SB-8444
Ø19.5mm
VO-SB-7199
Ø20.5mm
VO-SB-7897
Ø21.7mm
VO-SB-8811
VO-TC-0586
VO-SB-8812
VO-TC-0586
VO-TC-0586
VO-SB-7916
VO-SB-7914
VO-LS-0584
VO-LS-2205
VO-SB-7915
VO-TC-8737
VO-LS-0418
VO-SB-7880

g_ 5eQ5FEAE
8Y7C7CA880038Y7C7CA880P

g_ 5h a59FD9
8Y7B7E8C90O38Y7B7E8C90S

g_ 5h a59FD>
8Y7B7E8C80O38Y7B7E8C80S

g_ 5h a59FDB
8Y7B7E8C90Q38Y7B7E8C9a

g_ 5h a59FDC
8Y7B7E8C80Q38Y7B7E8C8a

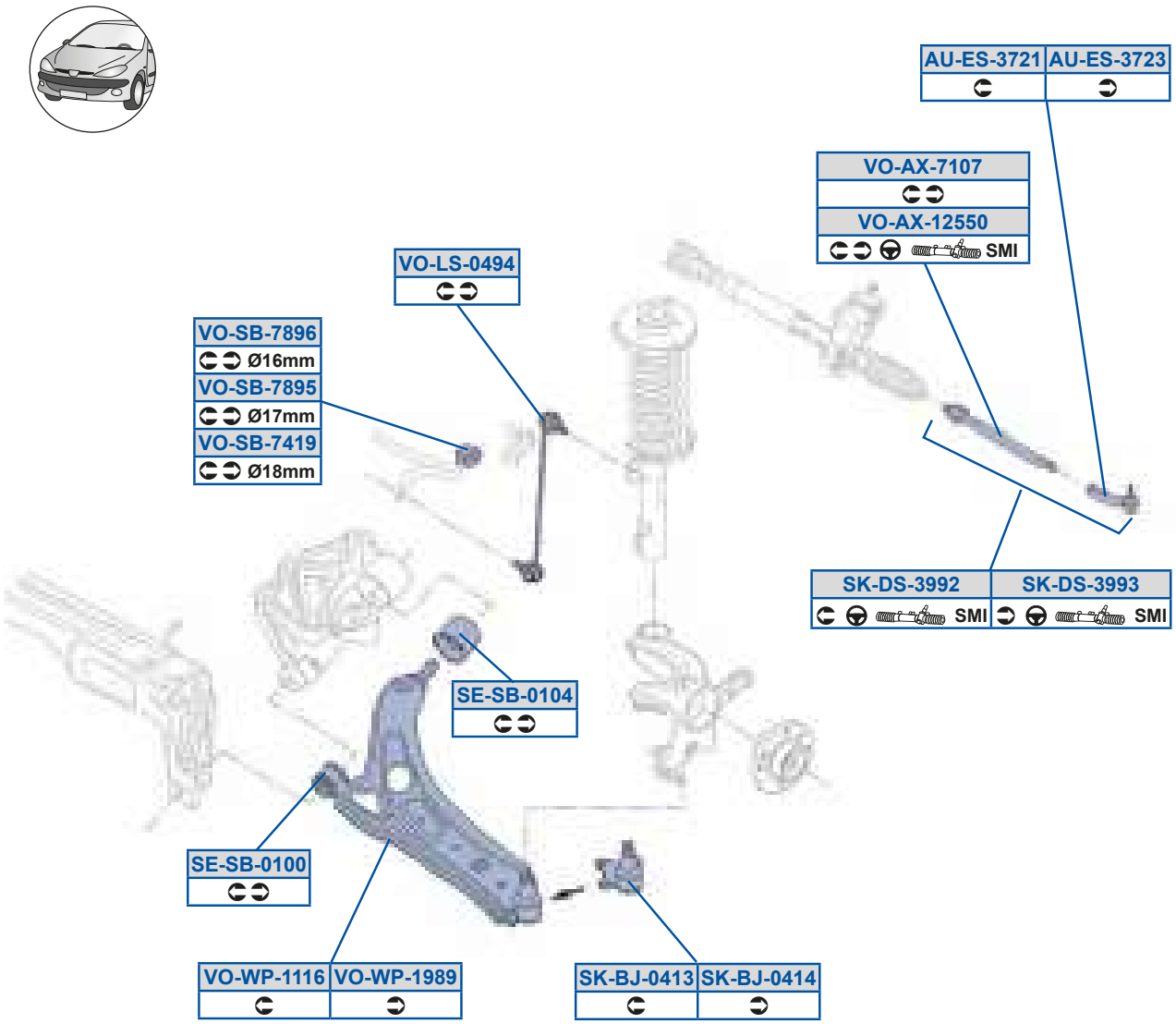
AU-ES-3721
AU-ES-3723
VO-AX-7107
VO-AX-12550
SMI
VO-LS-0494
VO-SB-7896
Ø16mm
VO-SB-7895
Ø17mm
VO-SB-7419
Ø18mm
SK-DS-3992
SMI
SK-DS-3993
SMI
SE-SB-0104
SE-SB-0100
VO-WP-1116
VO-WP-1989
SK-BJ-0413
SK-BJ-0414

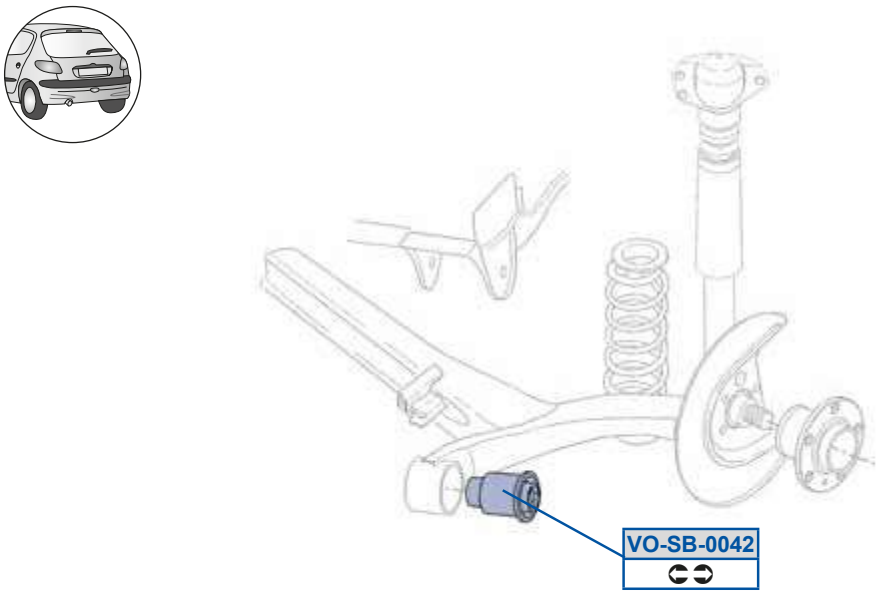
VO-SB-0042

Of 5Sd5AE>9
Cu7B99F88O3C 7B9AF88

Of 5Sd5AE>A
C 7B9AF893DI 7B8GF89Q

dS5dP58988
DI 7B7E8F9O

dS5dP5898B
8Y7B7E8FAS3DI 7B7E8FA

dY5PX58B9A
C 7B7EADCP3DI 7B7EADCO

dY5PX58B9B
C 7B7EADDP3DI 7B7EADDO

dY5Rd5AGG>
DI 7B9AF7AQ3DI 7B9AF7AU

dY5Rd5AGGA
C 7B9AF7B3DI 7B9AF7BQ

g_ 5Oi 59>CC8
DI 7B9AF87Q

g_ 5Oi 5E98E
8G8B8GF983DY7B99F7AO /40

g_ 5Zd58BGB
DI 7B88A8C03DI 7B88A8CP

g_ 5dP588B>
8X7C78CB8Q

g_ 5dP5EB9G
DI 7B88A8BS3DI 7B88A8Bd

g_ 5dP5EFGC
DI 7B88A8Ba 3DI 7B88A8BI

g_ 5dP5EFGD
DI 7B88A8BX3DI 7B88A8BZ

g_ 5h a5999D
DI 7B7E8C8R

g_ 5h a59GFG
DI 7B7E8C8R 2 P X

gh

U_ZT WWO9V91	8F7G9	8E7GF	U_ZT WWQtu é x 09SE1	8E7GA	8C7GF
U_ZT WWgt é 09VC1	8E7GA	8B7GG	U_ZT Wy Qtu é x 09SE1	8D7GF	8D78;

K150024
K150094
TRW
K150146
ZF

VO-DS-7180	VO-DS-7182
VO-DS-8204	**VO-DS-8205**
ZF	ZF
VO-DS-7190	**VO-DS-7191**
TRW	TRW
GTi, 16V, VR6	GTi, 16V, VR6

VO-SB-6725
Ø18mm
VO-SB-6788
Ø19mm

VO-ES-7139	VO-ES-7106

VO-DS-7187
✓ [GTi, VR6, TDi 110CV]

VO-SB-10067
✓2.8VR6
VO-SB-10056
✓

VO-LS-1516
✗ [GTi, VR6, TDi 110CV]

VO-SB-1358

VO-AX-7181
VO-AX-0383
ZF
VO-AX-7183
TRW
GTi, 16V, VR6

VO-BJ-7184
Ø 16.5mm ✓ [GTi, VR6]
VO-BJ-7154
Ø 19mm ✗ [GTi, VR6]

VO-SB-1329

VO-WP-8254	VO-WP-8221
Ø19mm ✗ [GTi, VR6]	Ø19mm ✗ [GTi, VR6]
VO-WP-0530	**VO-WP-0529**
Ø 16.5mm ✓ [GTi, VR6]	Ø16.5mm ✓ [GTi, VR6]

VO-SB-10061

VO-SB-4169
✗ Variant
VO-SB-4445
✓ Variant

MOOG

Y9C88>B
8G8B8GFA8

g_ 5Rd5E9F8
8V7B8GF7A38V7B8GF7A0

g_ 5Sd5E9AG
8G8B8GF883A07B99F88

g_ 5dP5BBBC
8VGC78CB8

Y9C88GB
8V7B99FA8P3ACEB99FA80

g_ 5Rd5E9F>
8V7B8GF7B38V7B8GF7B0

g_ 5Zd59C9D
8G8B88A8C38G8B88A8CP

g_ 5dP5DE>C
8G8B88A8B

Y9C89BD
ACEB99FA8P

g_ 5Rd5E9FE
CACB88A8C

g_ 5dP5988CD
ACEB89A9G3F88B89AA8

g_ 5dP5DEFF
8V7B88A8B

g_ 5Oi 58AFA
8G8B99F98Q38V7B99F7AP /40

g_ 5Rd5E9G8
8V7B99F7A38V7B99F7A0

g_ 5dP5988D9
8E8C8AAAA38G8C89AAA

g_ 5h a58C>G
8V7B7E8C9

g_ 5Oi 5E9F9
8V7B8GF9838V7B8GF980

g_ 5Rd5E9G9
8V7B99F7B38V7B99F7B0

g_ 5dP5988DE
8X7B899BG3ACEB899BG

g_ 5h a58CA8
8V7B7E8C80

g_ 5Oi 5E9FA
8V7B99F7A0 /40 38V7B99F980

g_ 5Rd5F>8B
8V7B99F7AP38V7B99F7AQ

g_ 5dP59A>G
8G8B7E8F93ACEB7E8F9

g_ 5h a5F>>9
8V7B7E8C8

g_ 5PX5E9CB
ACEB7EADC3ACEB7EADC0

g_ 5Rd5F>8C
8V7B99F7BP38V7B99F7BQ

g_ 5dP59ACF
8G8B7E8F838G8B7E8F80

g_ 5h a5F>CB
8V7B7E8C8

g_ 5PX5E9FB
8V7B7EADC

g_ 5Sd5E98D
8G8B8GF893A07B99F89

g_ 5dP5B9DG
8V7C78CB838V7C78CB80

U_ZT Wy 09X91	8F7GE 8D78C	U_ZT Wy gt 09X91	8C788 8C78B
U_ZT Wy gt ét 09XC1	8C7GG 8D78D		

VO-DS-8281	VO-DS-8284
→Ch. 1J-WW062359	→Ch. 1J-WW062359
→Ch. 1J-WB027484	→Ch. 1J-WB027484
→Ch. 1J-WP050832	→Ch. 1J-WP050832
→Ch. 1J-WD039150	→Ch. 1J-WD039150
VO-DS-1549	**VO-DS-1548**
Ch. 1J-WW062359→	Ch. 1J-WW062359→
Ch. 1J-WB027484→	Ch. 1J-WB027484→
Ch. 1J-WP050832→	Ch. 1J-WP050832→
Ch. 1J-WD039150→	Ch. 1J-WD039150→

VO-SB-14966 Ø10mm
VO-SB-14628 Ø15mm
VO-SB-6818 Ø17mm
VO-SB-13250 Ø19mm
VO-SB-7422 Ø20mm
AU-SB-4847 Ø21mm
VO-SB-6796 Ø23mm

VO-RK-15029 ZF
VO-RK-15052 TRW ✗ 1.6FSi
VO-RK-15061 TRW ✓1.6FSi

AU-SB-7331 ✓ R32

VO-SB-4523

VO-SB-1369

VO-SB-1329

K150146 ZF, ✗ 1.6FSi
K150182 TRW, ✗ 1.6FSi
K150231 ✓ 1.6FSi

VO-AX-8286
→Ch. 1J-WW062359
→Ch. 1J-WB027484
→Ch. 1J-WP050832
→Ch. 1J-WD039150
VO-AX-13741
Ch. 1J-WW062359→
Ch. 1J-WB027484→
Ch. 1J-WP050832→
Ch. 1J-WD039150→
AU-AX-6982 ✓ 3.2 R32 4Motion

VO-SB-10053

VO-WP-1553	VO-WP-1552
✗ 3.2 R32	✗ 3.2 R32
AU-TC-8869	**AU-TC-8870**
Steel ✓ 3.2 R32	Steel ✓ 3.2 R32
AU-WP-3948	**AU-WP-3949**
Iron ✓ 3.2 R32	Iron ✓ 3.2 R32

VO-BJ-8287	VO-BJ-8288
✗ 3.2 R32	✗ 3.2 R32
VO-BJ-2410	
✓ 3.2 R32	

VO-LS-0475 Fe 105mm Ø23mm ✗ 4 Motion
VO-LS-4916 ✓ P Ø21mm
VO-LS-7327 ✓ P Ø23mm

VO-RK-4853 ❶+❷+❸+❹ ✗ 4 Motion

VO-LS-2406	VO-LS-0456
Fe ✓ 4 Motion 336mm	Fe ✓ 4 Motion 336mm

VO-ES-8283	VO-ES-8285
→Ch. 1J-WW062359	→Ch. 1J-WW062359
→Ch. 1J-WB027484	→Ch. 1J-WB027484
→Ch. 1J-WP050832	→Ch. 1J-WP050832
→Ch. 1J-WD039150	→Ch. 1J-WD039150
VO-ES-1507	**VO-ES-1506**
Ch. 1J-WW062359→	Ch. 1J-WW062359→
Ch. 1J-WB027484→	Ch. 1J-WB027484→
Ch. 1J-WP050832→	Ch. 1J-WP050832→
Ch. 1J-WD039150→	Ch. 1J-WD039150→
VO-ES-2405	**VO-ES-2404**
✓ 3.2 R32	✓ 3.2 R32

✗ 4 Motion

VO-SB-10063

VO-SB-0042 Ø72mm
VO-SB-4857 Ø69mm

✓ 4 Motion

VO-SB-10130

VO-LS-3680
AU-LS-4193

VO-SB-10179

VO-SB-10131

MOOG

Of 5Oi 5DGF>
Fd7B99F7ER

Y9C89BD
ACEB99FA8P

g_ 5Rd59CBF
8X7B99F7B038X7B99F7BP

g_ 5Sd5F>FA
8X7B99F8838X7B99F880

Of 5Zd5B9GA
8X7C7CBDDQ

Y9C89F>
8X7B99FA838X7B99FA8P

g_ 5Rd59CBG
8X7B99F7A038X7B99F7AP

g_ 5Sd5F>FC
8X7B99F8938X7B99F890

Of 5dP5BFBE
8X7B88A8BQ

Y9C8>A9
8X7B99FA8P

g_ 5Rd5F>F9
8X7B99F7A38X7B99F7A0

g_ 5Zd58BCD
8X7B88A8DR

Of 5dP5EAA9
Fd7B7E8F8P

g_ 5Oi 59AEB9
8X7B99F7AP38X7B99F7BP

g_ 5Rd5F>FB
8X7B99F7B38X7B99F7B0

g_ 5Zd58BEC
8X7B88A8C38X7B88A8CP

Of 5eQ5FFDG
Fd7B7E8C803Fd7B7E8C8R

g_ 5Oi 5F>FD
8V7B99F7A /40

g_ 5Sd59C8D
8X7B99F89P38X7B99F89S

g_ 5Zd5>B8D
8X7B88A8CR

Of 5eQ5FFE8
Fd7B7E8C903Fd7B7E8C9R

g_ 5PX5>B98
Fd7B7EADC03Fd7B7EADCP

g_ 5Sd59C8E
8X7B99F88P38X7B99F88S

g_ 5Zd5ADF8
8X7C7CBDDP

Of 5h a5AGBF
Fd7B7E8C803Fd7B7E8C8R

g_ 5PX5F>FE
8X7B7EADC038X7B7EADCP

g_ 5Sd5>B8B
Fd7B99F893Fd7B99F890

g_ 5Zd5BG9D
8X7B88A8C38X7B88A8CP

Of 5h a5AGBG
Fd7B7E8C903Fd7B7E8C9R

g_ 5PX5F>FF
8X7B7EADD038X7B7EADDP

g_ 5Sd5>B8C
Fd7B99F880

g_ 5Zd5EA>E
8X7B88A8CV38X7B88A8CY

U_ZT Wy 09X91	8F7GE 8D78C	U_ZT Wy gt 09X91	8C788 8C78B
U_ZT Wy gt ét 09XC1	8C7GG 8D78D		

VO-DS-8281	VO-DS-8284
→Ch. 1J-WW062359	→Ch. 1J-WW062359
→Ch. 1J-WB027484	→Ch. 1J-WB027484
→Ch. 1J-WP050832	→Ch. 1J-WP050832
→Ch. 1J-WD039150	→Ch. 1J-WD039150
VO-DS-1549	**VO-DS-1548**
Ch. 1J-WW062359→	Ch. 1J-WW062359→
Ch. 1J-WB027484→	Ch. 1J-WB027484→
Ch. 1J-WP050832→	Ch. 1J-WP050832→
Ch. 1J-WD039150→	Ch. 1J-WD039150→

VO-SB-14966 Ø10mm
VO-SB-14628 Ø15mm
VO-SB-6818 Ø17mm
VO-SB-13250 Ø19mm
VO-SB-7422 Ø20mm
AU-SB-4847 Ø21mm
VO-SB-6796 Ø23mm

VO-RK-15029 ZF
VO-RK-15052 TRW ✗ 1.6FSi
VO-RK-15061 TRW ✓1.6FSi

AU-SB-7331 ✓ R32

VO-SB-4523

VO-SB-1369

VO-SB-1329

VO-RK-4853 ❶+❷+❸+❹ ✗ 4 Motion

VO-LS-2406 Fe ✓ 4 Motion 336mm | **VO-LS-0456** Fe ✓ 4 Motion 336mm

VO-LS-0475 Fe 105mm Ø23mm ✗ 4 Motion
VO-LS-4916 ✓ P Ø21mm
VO-LS-7327 ✓ P Ø23mm

K150146 ZF, ✗ 1.6FSi
K150182 TRW, ✗ 1.6FSi
K150231 ✓ 1.6FSi

VO-SB-10053

VO-AX-8286
→Ch. 1J-WW062359
→Ch. 1J-WB027484
→Ch. 1J-WP050832
→Ch. 1J-WD039150
VO-AX-13741
Ch. 1J-WW062359→
Ch. 1J-WB027484→
Ch. 1J-WP050832→
Ch. 1J-WD039150→
AU-AX-6982
✓ 3.2 R32 4Motion

VO-WP-1553	VO-WP-1552
✗ 3.2 R32	✗ 3.2 R32
AU-TC-8869	**AU-TC-8870**
Steel ✓ 3.2 R32	Steel ✓ 3.2 R32
AU-WP-3948	**AU-WP-3949**
Iron ✓ 3.2 R32	Iron ✓ 3.2 R32

VO-BJ-8287	VO-BJ-8288
✗ 3.2 R32	✗ 3.2 R32
VO-BJ-2410	
✓ 3.2 R32	

VO-ES-8283	VO-ES-8285
→Ch. 1J-WW062359	→Ch. 1J-WW062359
→Ch. 1J-WB027484	→Ch. 1J-WB027484
→Ch. 1J-WP050832	→Ch. 1J-WP050832
→Ch. 1J-WD039150	→Ch. 1J-WD039150
VO-ES-1507	**VO-ES-1506**
Ch. 1J-WW062359→	Ch. 1J-WW062359→
Ch. 1J-WB027484→	Ch. 1J-WB027484→
Ch. 1J-WP050832→	Ch. 1J-WP050832→
Ch. 1J-WD039150→	Ch. 1J-WD039150→
VO-ES-2405	**VO-ES-2404**
✓ 3.2 R32	✓ 3.2 R32

✗ 4 Motion

VO-SB-10063

VO-SB-0042 Ø72mm | **VO-SB-4857** Ø69mm

✓ 4 Motion

VO-SB-10130

VO-LS-3680
AU-LS-4193

VO-SB-10179

VO-SB-10131

MOOG

g_ 5c Y59C8>G
8X7B99F7AP38X7B99F7EP

g_ 5c Y59C8C>
8X7B99F7AP38X7B99F7EP

g_ 5c Y59C8D9
8X7B99F7AP38X7B99F7EP

g_ 5c Y5BFCA

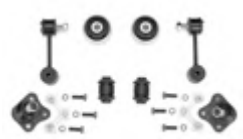

g_ 5dP588B>
8X7C78CB8Q

g_ 5dP5988CA
8V7B89ADC038X7B899BG

g_ 5dP5988DA
8X7C8AACAP38X7C8AACAQ

g_ 5dP5989A8
8X7C7C8BC038X7C7C8BCP

g_ 5dP5989A9
8X7C7C8E8P

g_ 5dP5989EG
8X7C7C97A38X7C7CADCR

g_ 5dP59A>C8
8X7B88A8Bn

g_ 5dP59A>G
8G8B7E8F93ACEB7E8F9

g_ 5dP59ADG
8X7B7E8F838X7B7E8F80

g_ 5dP59BD>F
8X7B88A9E

g_ 5dP59BGDD
FR7C88A9EQ

g_ 5dP5BC>A
8X78GGB9G

g_ 5dP5BFCE
8X7C78CB8R

g_ 5dP5DEGD
8X7B88A8BU38X7B88A8Bt

g_ 5dP5DF9F
8X7B88A8B38X7B88A8Bo

g_ 5dP5EB>>
8X7B88A8Bi

g_ 5h a59CC>
8X7B7E8C8038X7B7E8C8P

g_ 5h a59CCA
8X7B7E8C8038X7B7E8C8P

gh

U_ZT g 09Y91	9878A 8; 78G	U_ZT g gt đ 09YC1	8D78E 8E78G
U_ZT aZf d 0C[94C; 91	8978C 9; 79A		

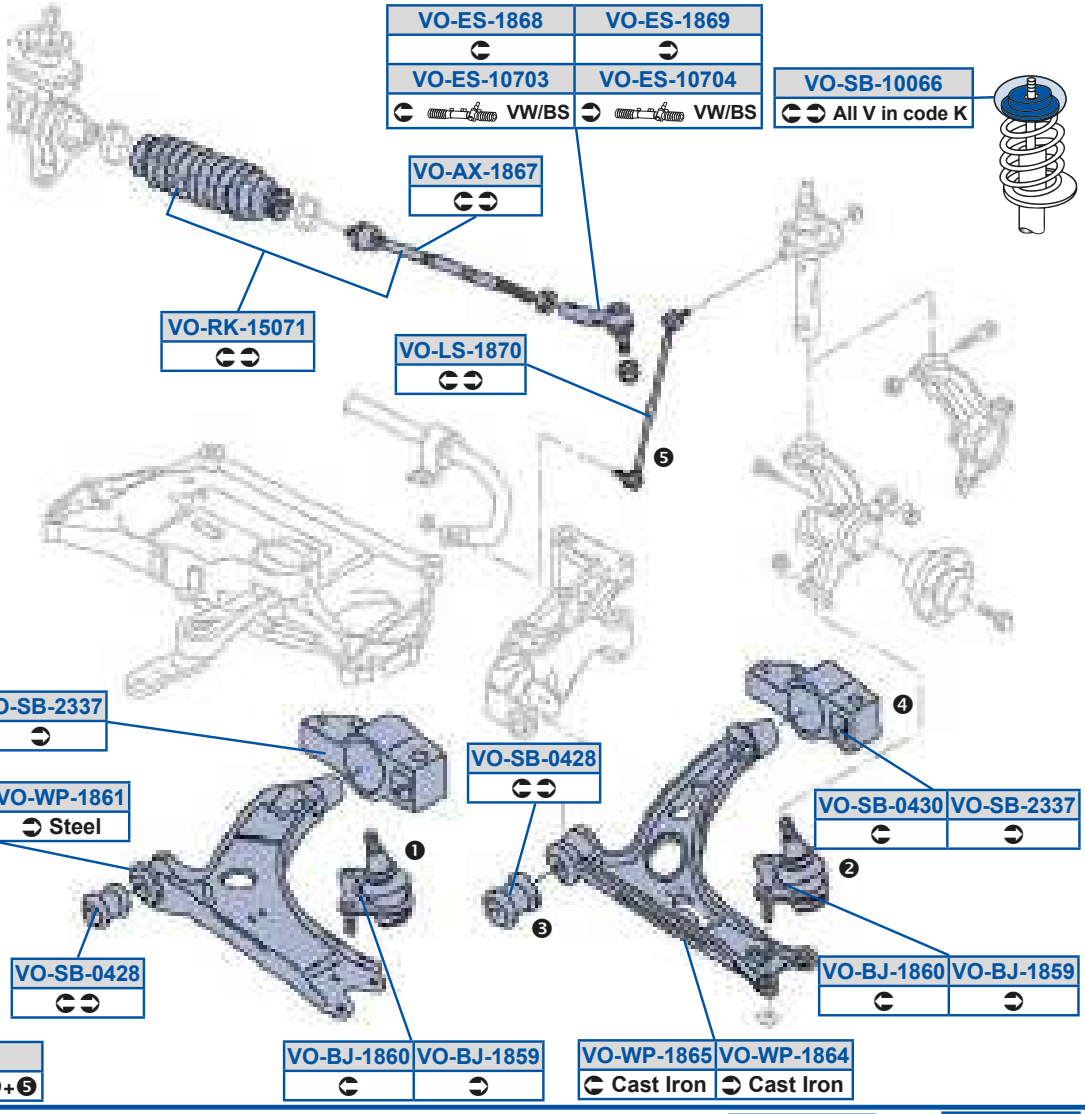

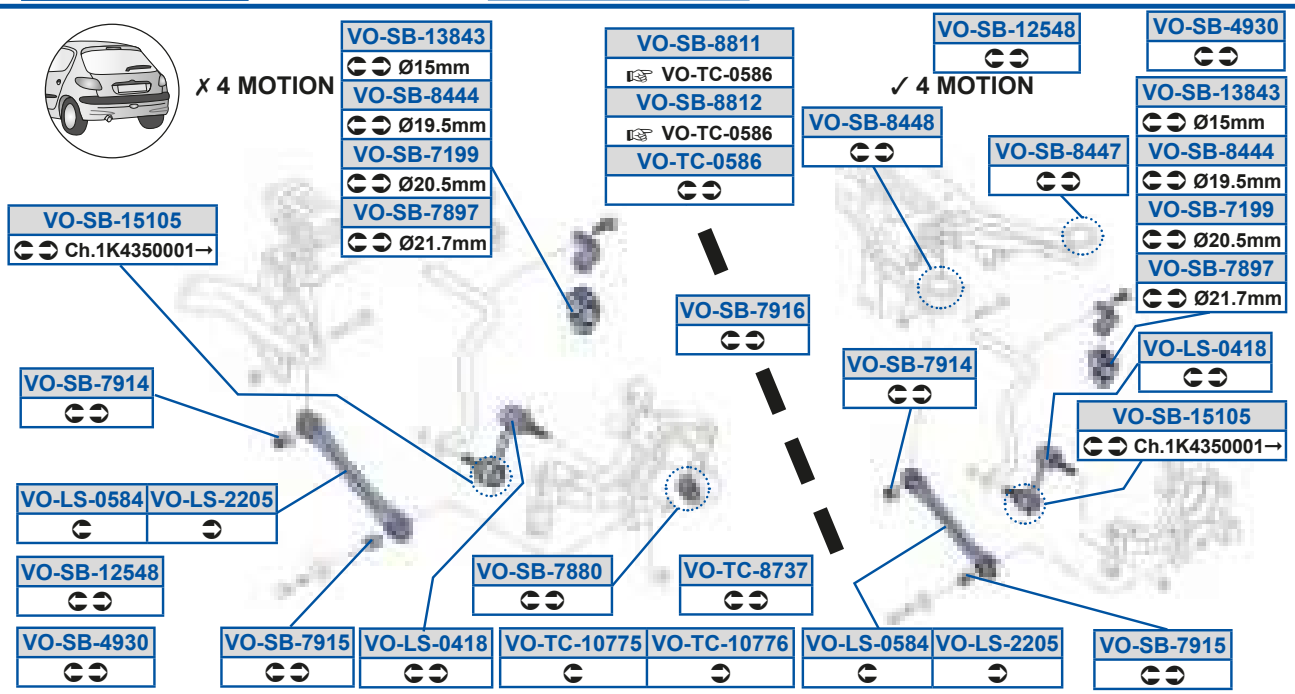

MOOG

g_ 5Oi 59FDE
8Y7B9AF87O

g_ 5Zd58CFB
8Y7C78C9GS38Y7C78C9GT

g_ 5dP59>CBF
8Y7C7CCCA38Y7C7CCCAO

g_ 5dP5EG9B
8Y7C78CB8Q

g_ 5PX59FCG
8Y7B7EADDP38Y7B7EADDQ

g_ 5Zd59FE8
8Y7B88A8CP38Y7B88A8CX

g_ 5dP59AFBA
8Y7C88A9EPO

g_ 5dP5EG9C
8Y7C7CCBAO

g_ 5PX59FD8
8Y7B7EADCP38Y7B7EADCQ

g_ 5Zd5>>8C
8Y7C78CA7P38Y7C78CA7Q

g_ 5dP59C98C
8Y7C7CBDCQ /40

g_ 5dP5EG9D
8Y7C7C8E8Q38Y7C7C8EAQ

g_ 5Sd598E8A
8Y7B9AF88O38Y7B9AF88Q

g_ 5c Y59C8E9
8Y7B9AF87O

g_ 5dP5>AAE
8Y78GG9A9U38Y78GG9A9X

g_ 5dP5FBBB
8Y7C88A9EOI

g_ 5Sd598E8B
8Y7B9AF89O38Y7B9AF89Q

g_ 5c Y5DD8D

g_ 5dP5BGA8
8Y7C7CCB8Q38Y7C7CCB8R

g_ 5dP5FBBE
8Y7C7C8BCS38Y7C7C8BCU

g_ 5Sd59FDF
8Y7B9AF88O38Y7B9AF88P

g_ 5dP58B>F
8Y7B7E8F938Y7B7E8F9O

g_ 5dP5E9GG
8Y7C88A9EOn

g_ 5dP5FBBF
8Y7C7C8BCT38Y7C7C8BCV

g_ 5Sd59FDG
8Y7B9AF89O38Y7B9AF89P

g_ 5dP58BA8
8Y78GG9A8U38Y78GG9A8X

g_ 5dP5EFF8
8Y7C7CCCA38Y7C7CCCAO

g_ 5dP5FF99
8Y7C7C9EGO

g_ 5Zd58B9F
8Y7C7CBDCO038Y7C7CBDCQ

g_ 5dP5988DD
8Y7B899BGP3Dd7B899BGQ

g_ 5dP5EFGE
8Y7C88A9EOo

g_ 5dP5FF9>
8Y7C7C97AO

gh

U_ZT g 09Y91	9878A 8; 78G	U_ZT g gt đ 09YC1	8D78E 8E78G
U_ZT aZf d 0C[94C; 91	8978C 9; 79A		

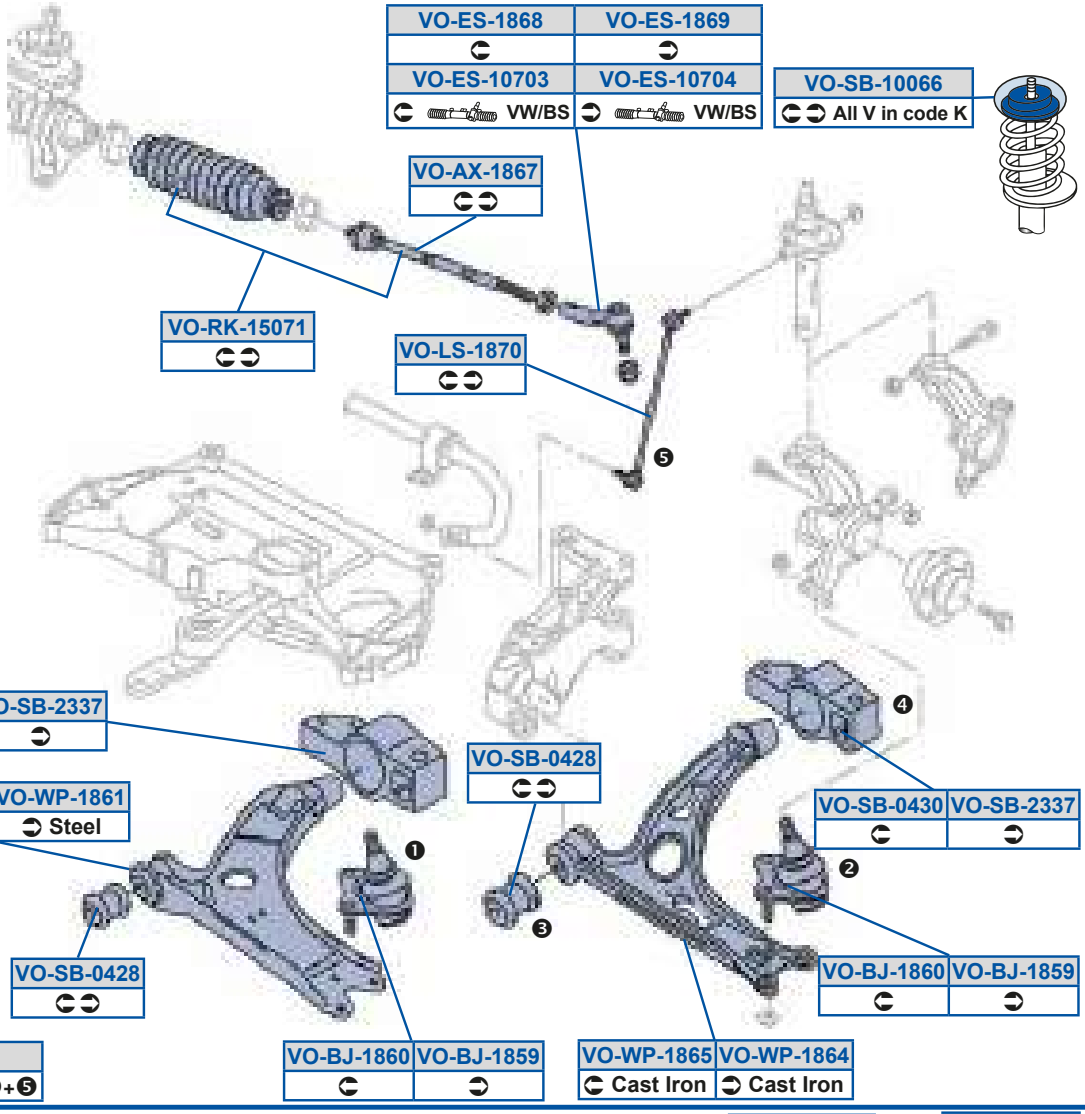

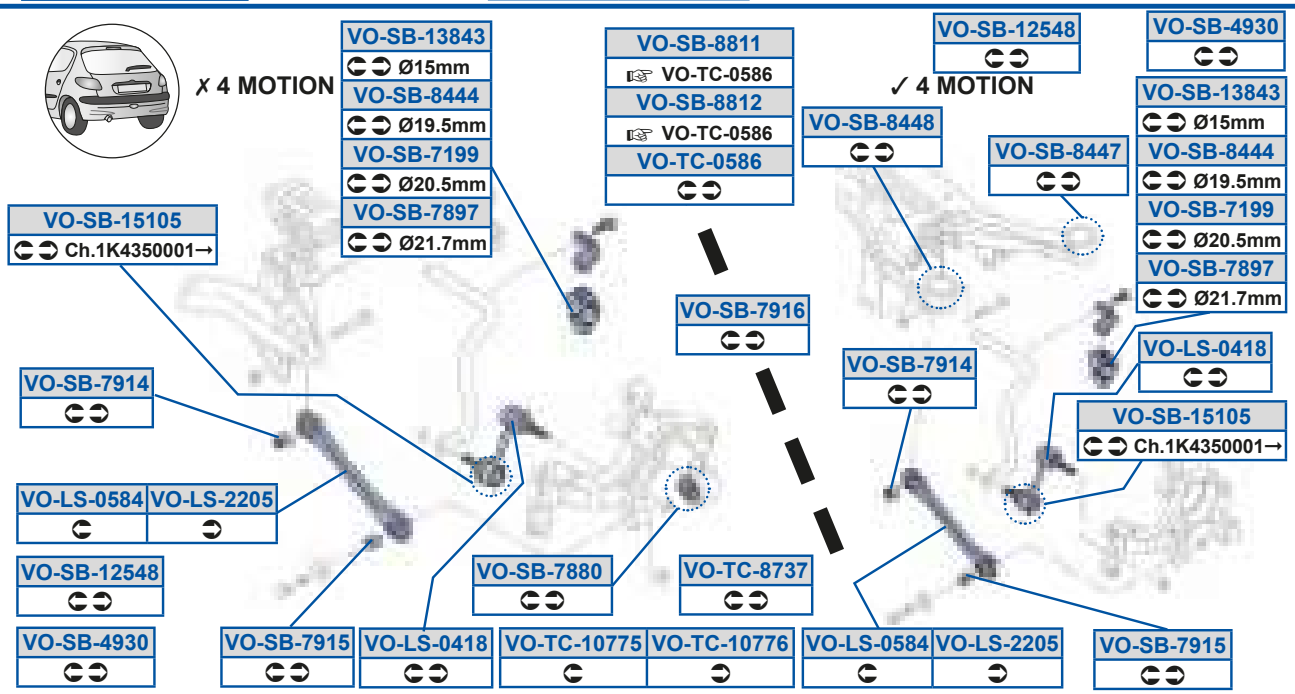

MOOG

g_ 5eQ58CFD
8Y7C7CA9AV38Y7C7CA9Ad

g_ 5eQ598EEC
8Y7C7C99AS38Y7C7C99AV

g_ 5eQ598EED
8Y7C7C99BS38Y7C7C99BV

g_ 5eQ5FEAE
8Y7C7CA880038Y7C7CA880P

g_ 5h a59FD9
8Y7B7E8C90038Y7B7E8C90S

g_ 5h a59FD>
8Y7B7E8C80038Y7B7E8C80S

g_ 5h a59FDB
8Y7B7E8C90Q38Y7B7E8C9a

g_ 5h a59FDC
8Y7B7E8C80Q38Y7B7E8C8a

gh

U_ZT gWOCY91	9878F 9979A	U_ZT gWQ x éu x OC9E1	8A799
U_ZT gWgt ét OOXC1	8E78G 8E79A		

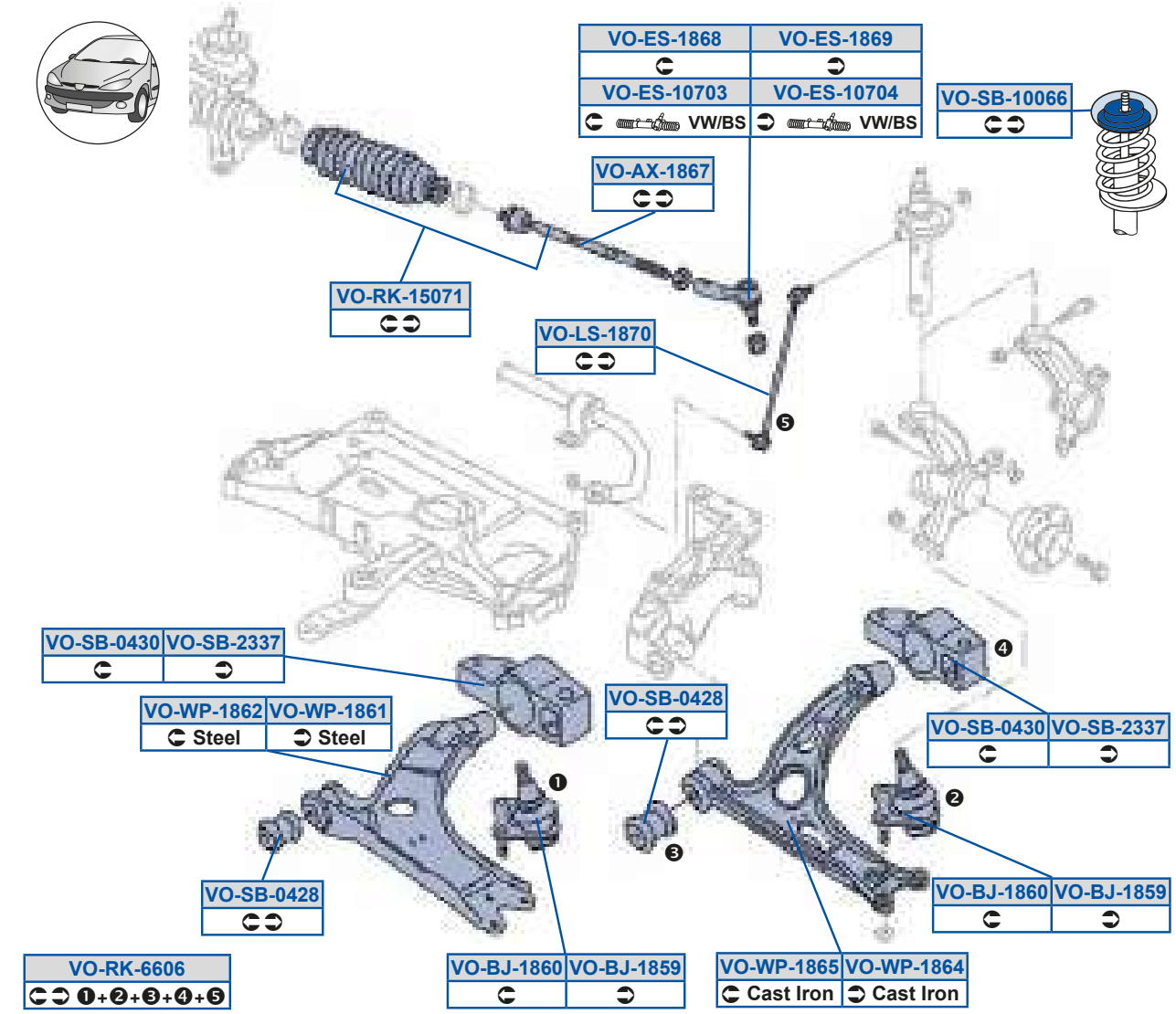

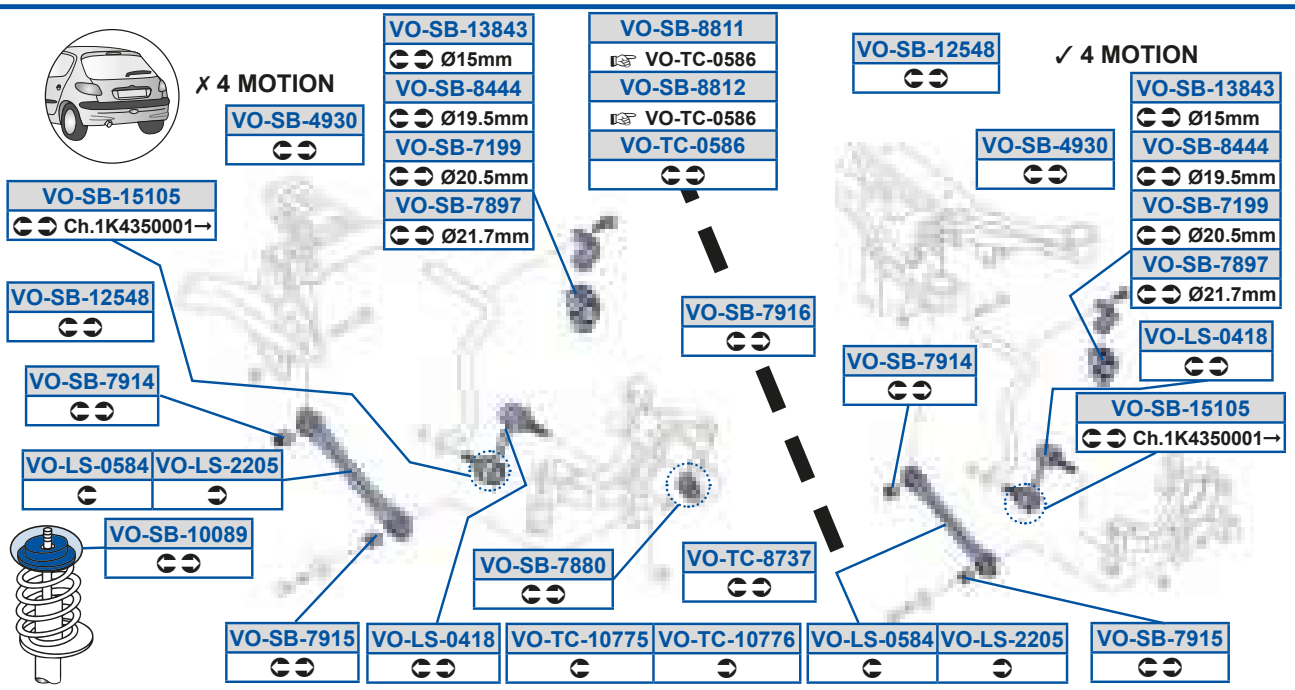

MOOG

g_ 5Oi 59FDE
8Y7B9AF87O

g_ 5Zd58CFB
8Y7C78C9GS38Y7C78C9GT

g_ 5dP5988FG
8Y7C8AACAU3AQ7C8AACA

g_ 5dP5EFGE
8Y7C88A9EOo

g_ 5PX59FCG
8Y7B7EADDP38Y7B7EADDQ

g_ 5Zd59FE8
8Y7B88A8CP38Y7B88A8CX

g_ 5dP59>CBF
8Y7C7CCCA38Y7C7CCCAO

g_ 5dP5EG9B
8Y7C78CB8Q

g_ 5PX59FD8
8Y7B7EADCP38Y7B7EADCQ

g_ 5Zd5>>8C
8Y7C78CA7P38Y7C78CA7Q

g_ 5dP59AFBA
8Y7C88A9EPO

g_ 5dP5EG9C
8Y7C7CCBAO

g_ 5Sd598E8A
8Y7B9AF88O38Y7B9AF88Q

g_ 5cY59C8E9
8Y7B9AF87O

g_ 5dP59C98C
8Y7C7CBDCQ /40

g_ 5dP5EG9D
8Y7C7C8E8Q38Y7C7C8EAQ

g_ 5Sd598E8B
8Y7B9AF89O38Y7B9AF89Q

g_ 5cY5DD8D

g_ 5dP5>AAE
8Y78GG9A9U38Y78GG9A9X

g_ 5dP5FBBB
8Y7C88A9EOI

g_ 5Sd59FDF
8Y7B9AF88O38Y7B9AF88P

g_ 5dP58B>F
8Y7B7E8F938Y7B7E8F9O

g_ 5dP5BGA8
8Y7C7CCB8Q38Y7C7CCB8R

g_ 5dP5FF99
8Y7C7C9EGO

g_ 5Sd59FDG
8Y7B9AF89O38Y7B9AF89P

g_ 5dP58BA8
8Y78GG9A8U38Y78GG9A8X

g_ 5dP5E9GG
8Y7C88A9EOn

g_ 5dP5FF9>
8Y7C7C97AO

g_ 5Zd58B9F
8Y7C7CBDCO038Y7C7CBDCQ

g_ 5dP5988DD
8Y7B899BGP3Dd7B899BGQ

g_ 5dP5EFF8
8Y7C7CCCA38Y7C7CCCAO

g_ 5eQ58CFD
8Y7C7CA9AV38Y7C7CA9Ad

gh

U_ZT gWOCY91	9878F 9979A	U_ZT gWQ x éu x OC9E1	8A799
U_ZT gWgt ét OOXC1	8E78G 8E79A		

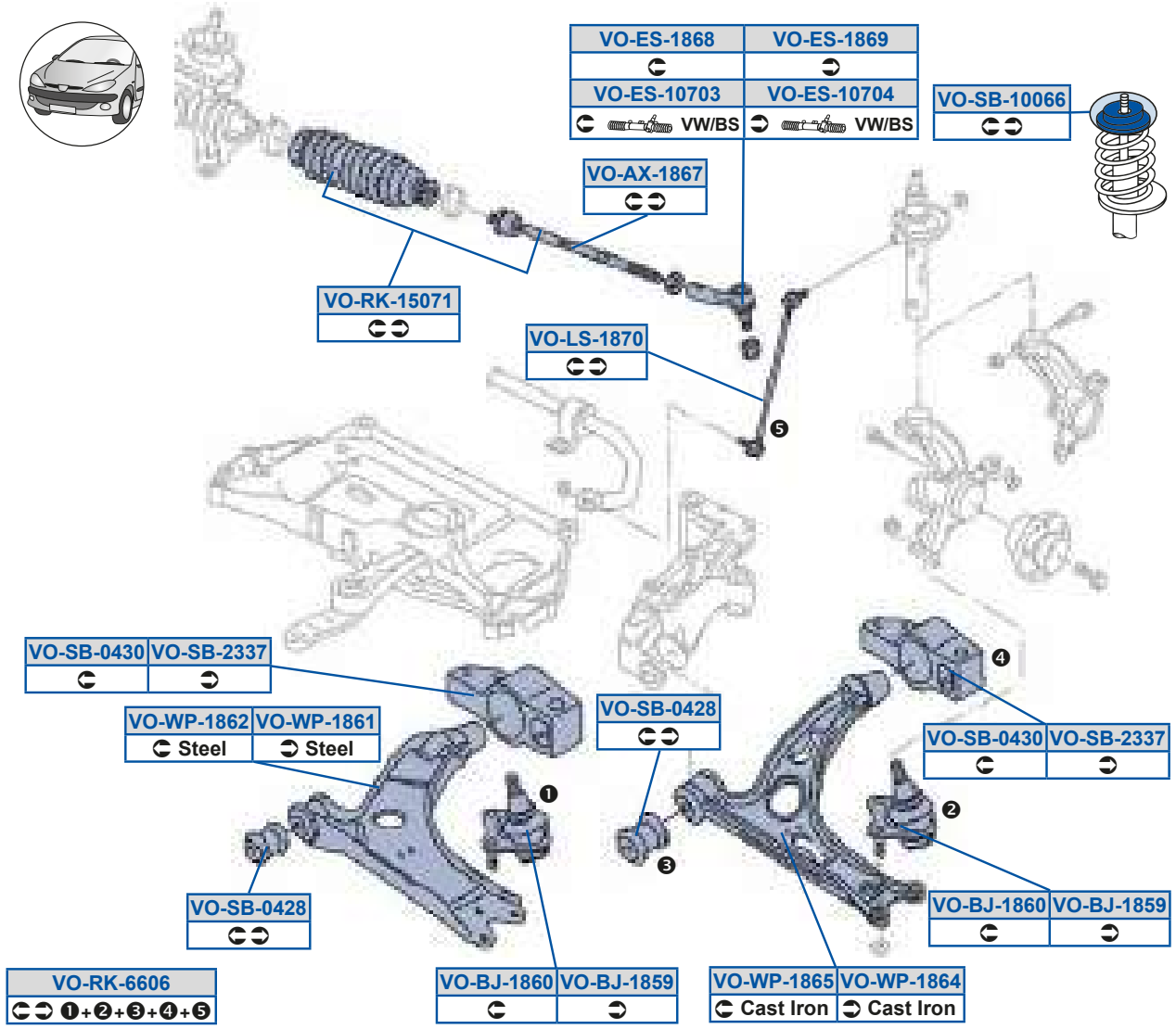

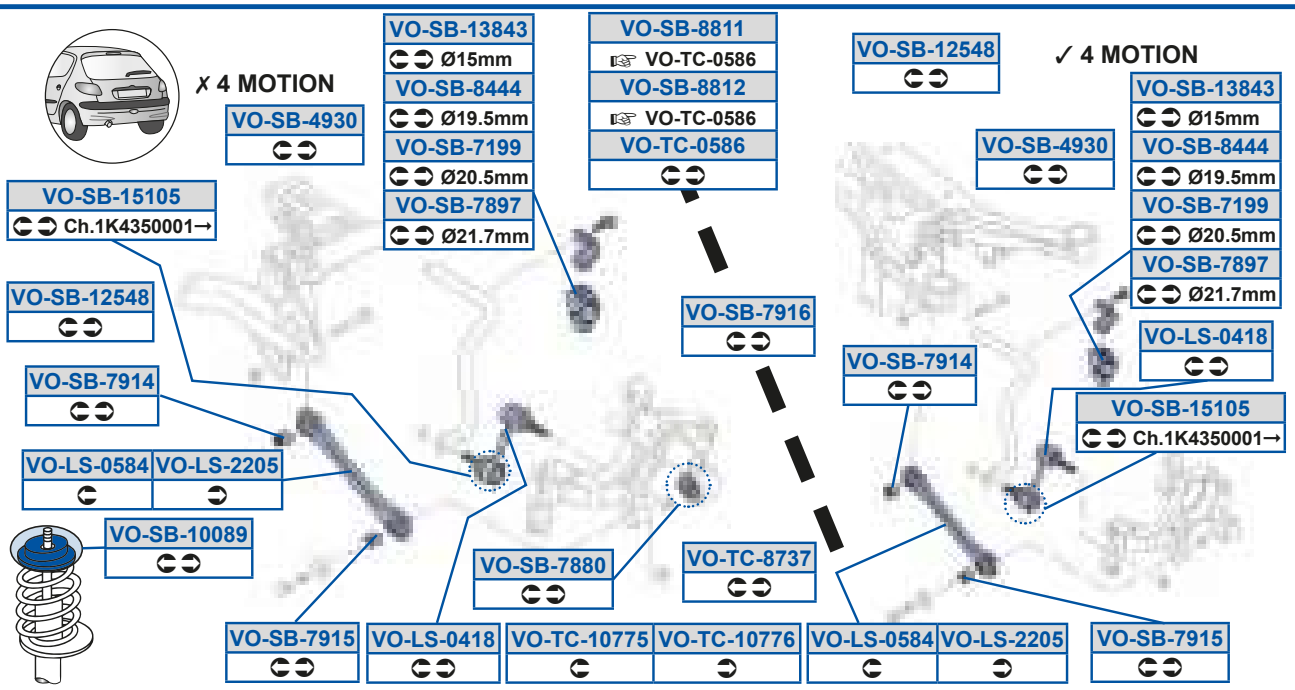

MOOG

g_ 5eQ598EEC
8Y7C7C99AS38Y7C7C99AV

g_ 5eQ598EED
8Y7C7C99BS38Y7C7C99BV

g_ 5eQ5FEAE
8Y7C7CA880038Y7C7CA880P

g_ 5h a59FD9
8Y7B7E8C90038Y7B7E8C90S

g_ 5h a59FD>
8Y7B7E8C80038Y7B7E8C80S

g_ 5h a59FDB
8Y7B7E8C90Q38Y7B7E8C9a

g_ 5h a59FDC
8Y7B7E8C80Q38Y7B7E8C8a

gh

U_ZT OZZec OQY	9; 79B	U_ZT gWOCU91	8F79;
U_ZT gWgt ét OPOC1	8B79A	U_ZT da_cedgO]	8C79B

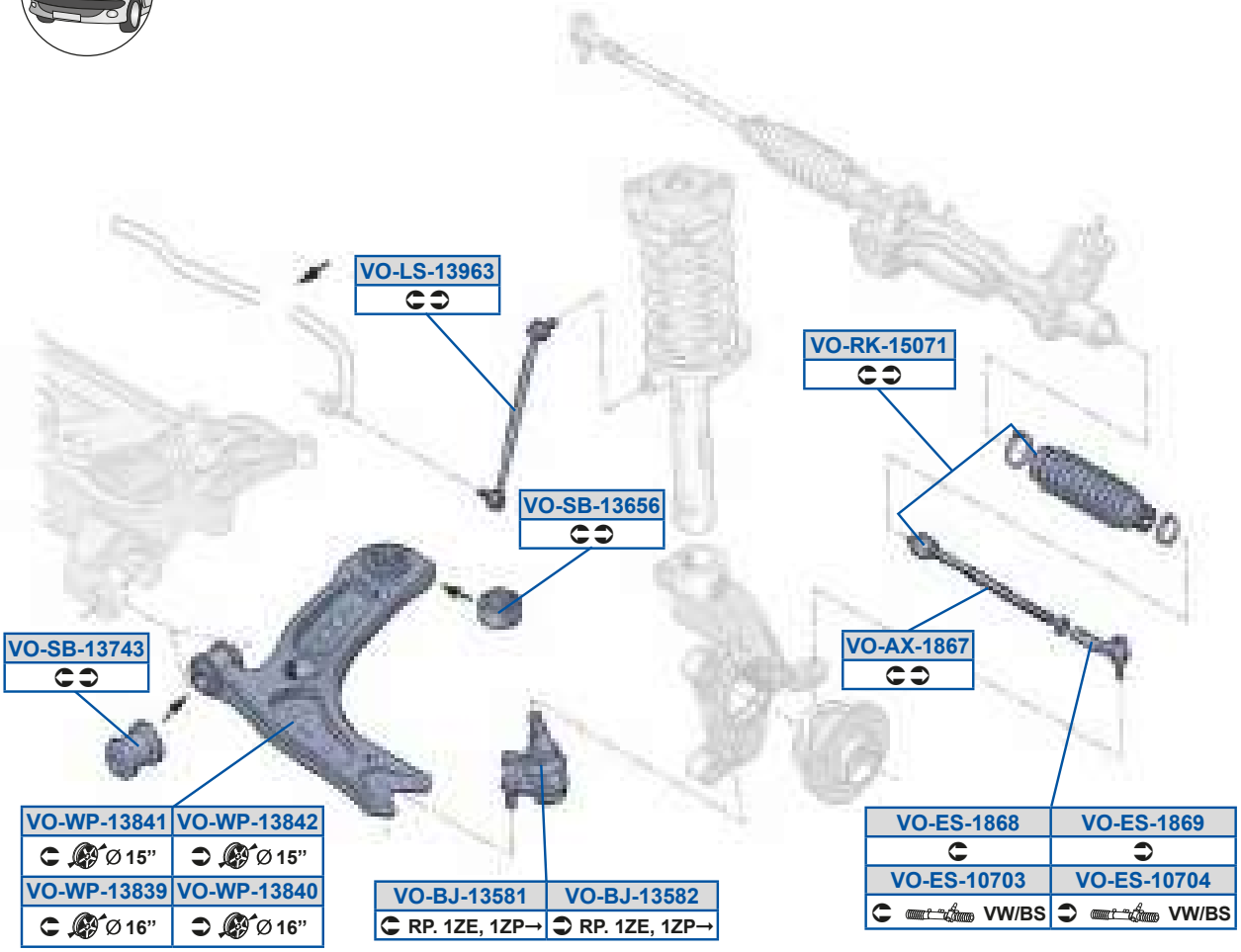

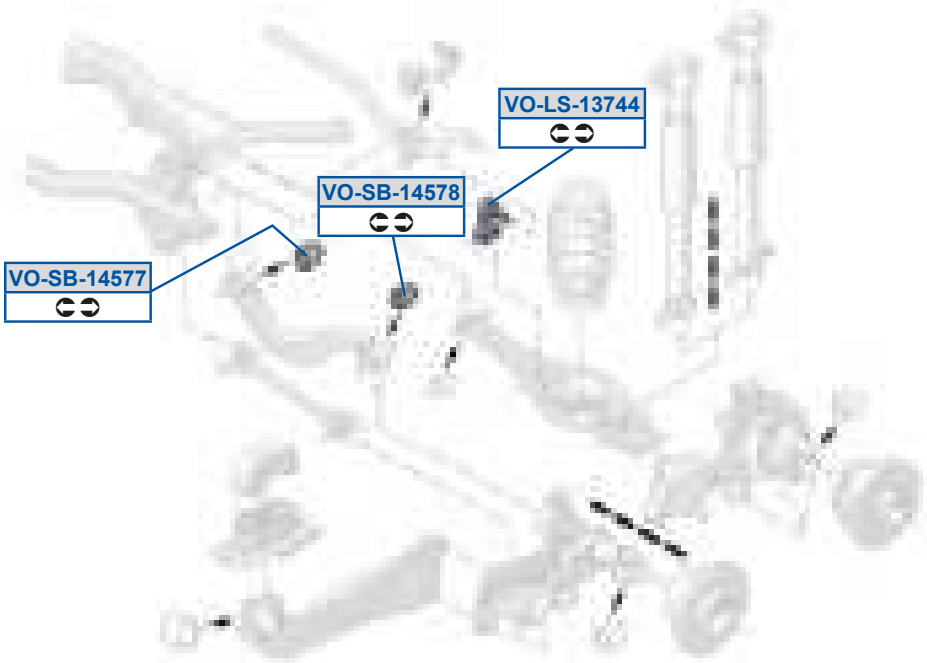

MOOG

g_ 5Oi 59FDE
8Y7B9AF87O

g_ 5Zd59AGDA
CI 7B88A8CP

g_ 5h a59AFB9
CI 7B7E8C8X23CI 7B7E8C8Z2

g_ 5PX59ACF9
CI 7B7EADCO

g_ 5c Y59C8E9
8Y7B9AF87O

g_ 5h a59AFB>
CI 7B7E8C9X23CI 7B7E8C9Z2

g_ 5PX59ACF>
CI 7B7EADDO

g_ 5dP59ADCD
CI 7B7E8F9T3CI 7B7E8FAS

g_ 5Sd598E8A
8Y7B9AF88038Y7B9AF88Q

g_ 5dP59AEBA
CI 7B7E8F93CI 7B7E8F9O

g_ 5Sd598E8B
8Y7B9AF89038Y7B9AF89Q

g_ 5dP59BCEE
CI 7 C78 C9G P /4O

g_ 5Sd59FDF
8Y7B9AF88038Y7B9AF88P

g_ 5dP59BCEF
CI 7C78C9GQ /4O3CI 7C7CCBAP

g_ 5Sd59FDG
8Y7B9AF89038Y7B9AF89P

g_ 5h a59AFAG
CI 7B7E8C8X3CI 7B7E8C8Z

g_ 5Zd59AEBB
CI 7C7CBDCQ

g_ 5h a59AFB8
CI 7B7E8C9X3CI 7B7E8C9Z

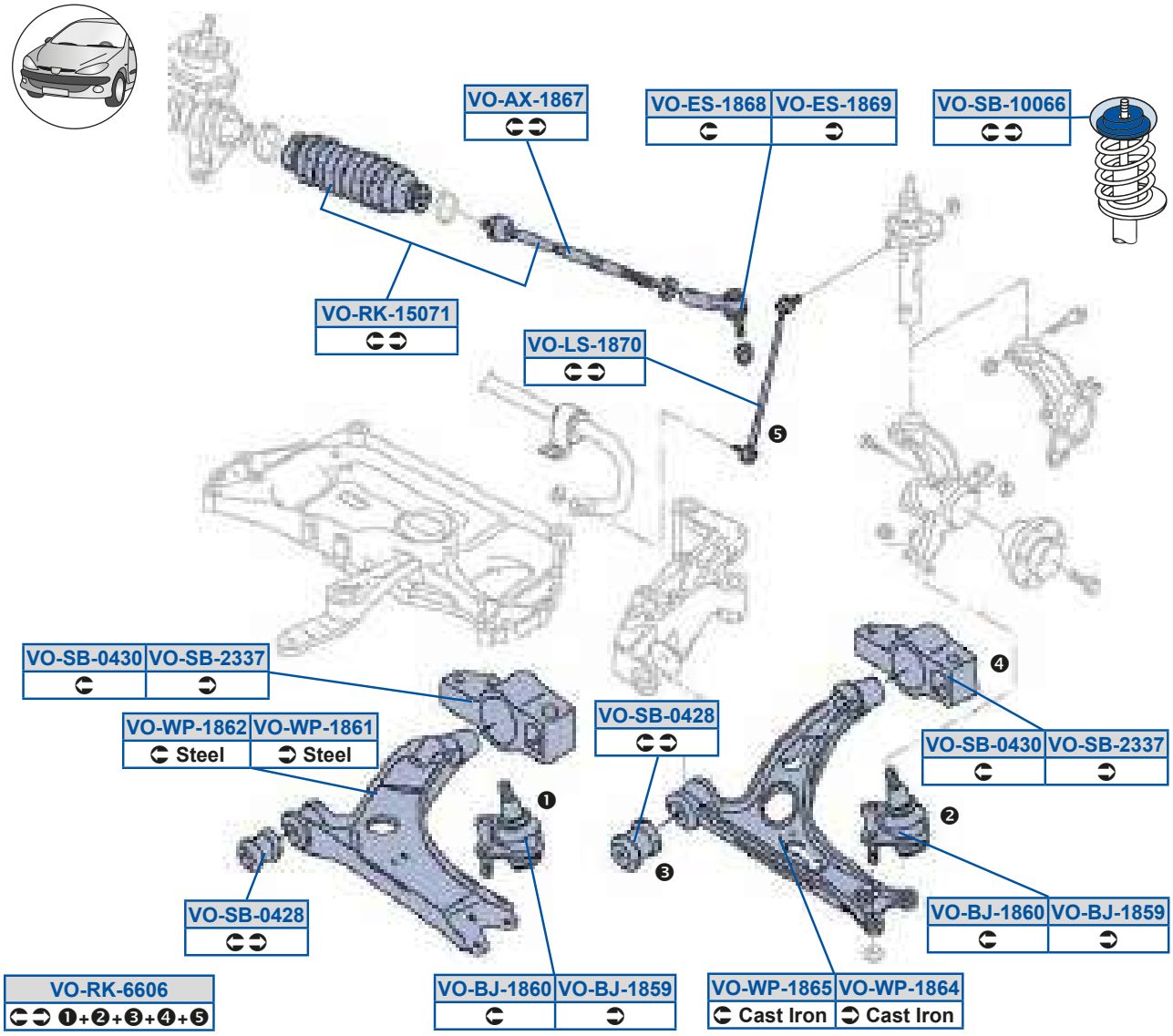
VO-AX-1867
VO-ES-1868
VO-ES-1869
VO-SB-10066
VO-RK-15071
VO-LS-1870
❺
VO-SB-0430
VO-SB-2337
VO-WP-1862
Steel
VO-WP-1861
Steel
VO-SB-0428
❹
VO-SB-0430
VO-SB-2337
❶
❷
❸
VO-SB-0428
VO-BJ-1860
VO-BJ-1859
VO-RK-6606
❶+❷+❸+❹+❺
VO-BJ-1860
VO-BJ-1859
VO-WP-1865
Cast Iron
VO-WP-1864
Cast Iron

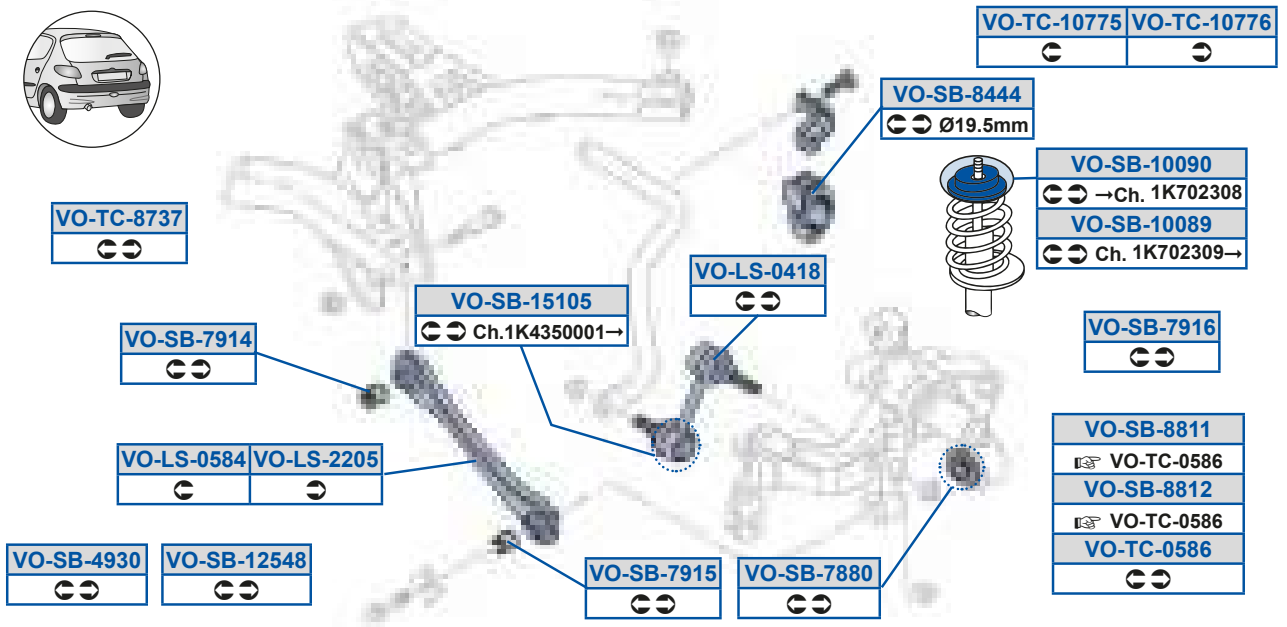
VO-TC-10775
VO-TC-10776
VO-SB-8444
Ø19.5mm
VO-SB-10090
→Ch. 1K702308
VO-SB-10089
Ch. 1K702309→
VO-TC-8737
VO-LS-0418
VO-SB-15105
Ch.1K4350001→
VO-SB-7916
VO-SB-7914
VO-SB-8811
VO-TC-0586
VO-SB-8812
VO-TC-0586
VO-LS-0584
VO-LS-2205
VO-SB-4930
VO-SB-12548
VO-SB-7915
VO-SB-7880
VO-TC-0586

g_ 5Oi 59FDE
8Y7B9AF87O

g_ 5Zd5>>8C
8Y7C78CA7P38Y7C78CA7Q

g_ 5dP59>CBF
8Y7C7CCCA38Y7C7CCCAO

g_ 5dP5FBBB
8Y7C88A9EOI

g_ 5PX59FCG
8Y7B7EADDP38Y7B7EADDQ

g_ 5cY59C8E9
8Y7B9AF87O

g_ 5dP59C98C
8Y7C7CBDCQ /40

g_ 5dP5FF99
8Y7C7C9EGO

g_ 5PX59FD8
8Y7B7EADCP38Y7B7EADCQ

g_ 5cY5DD8D

g_ 5dP5>AAE
8Y78GG9A9U38Y78GG9A9X

g_ 5dP5FF9>
8Y7C7C97AO

g_ 5Sd59FDF
8Y7B9AF88O38Y7B9AF88P

g_ 5dP58B>F
8Y7B7E8F938Y7B7E8F9O

g_ 5dP5BGA8
8Y7C7CCB8Q38Y7C7CCB8R

g_ 5eQ58CFD
8Y7C7CA9AV38Y7C7CA9Ad

g_ 5Sd59FDG
8Y7B9AF89O38Y7B9AF89P

g_ 5dP58BA8
8Y78GG9A8U38Y78GG9A8X

g_ 5dP5EFF8
8Y7C7CCCA38Y7C7CCCAO

g_ 5eQ598EEC
8Y7C7C99AS38Y7C7C99AV

g_ 5Zd58B9F
8Y7C7CBDCO038Y7C7CBDCQ

g_ 5dP5988DD
8Y7B899BGP3Dd7B899BGQ

g_ 5dP5EG9B
8Y7C78CB8Q

g_ 5eQ598EED
8Y7C7C99BS38Y7C7C99BV

g_ 5Zd58CFB
8Y7C78C9GS38Y7C78C9GT

g_ 5dP5988FG
8Y7C8AACAU3AQ7C8AACA

g_ 5dP5EG9C
8Y7C7CCBAO

g_ 5eQ5FEAE
8Y7C7CA88O038Y7C7CA88OP

g_ 5Zd59FE8
8Y7B88A8CP38Y7B88A8CX

g_ 5dP5988G8
8Y7C8AACAV

g_ 5dP5EG9D
8Y7C7C8E8Q38Y7C7C8EAQ

g_ 5h a59FD9
8Y7B7E8C9OO38Y7B7E8C9OS

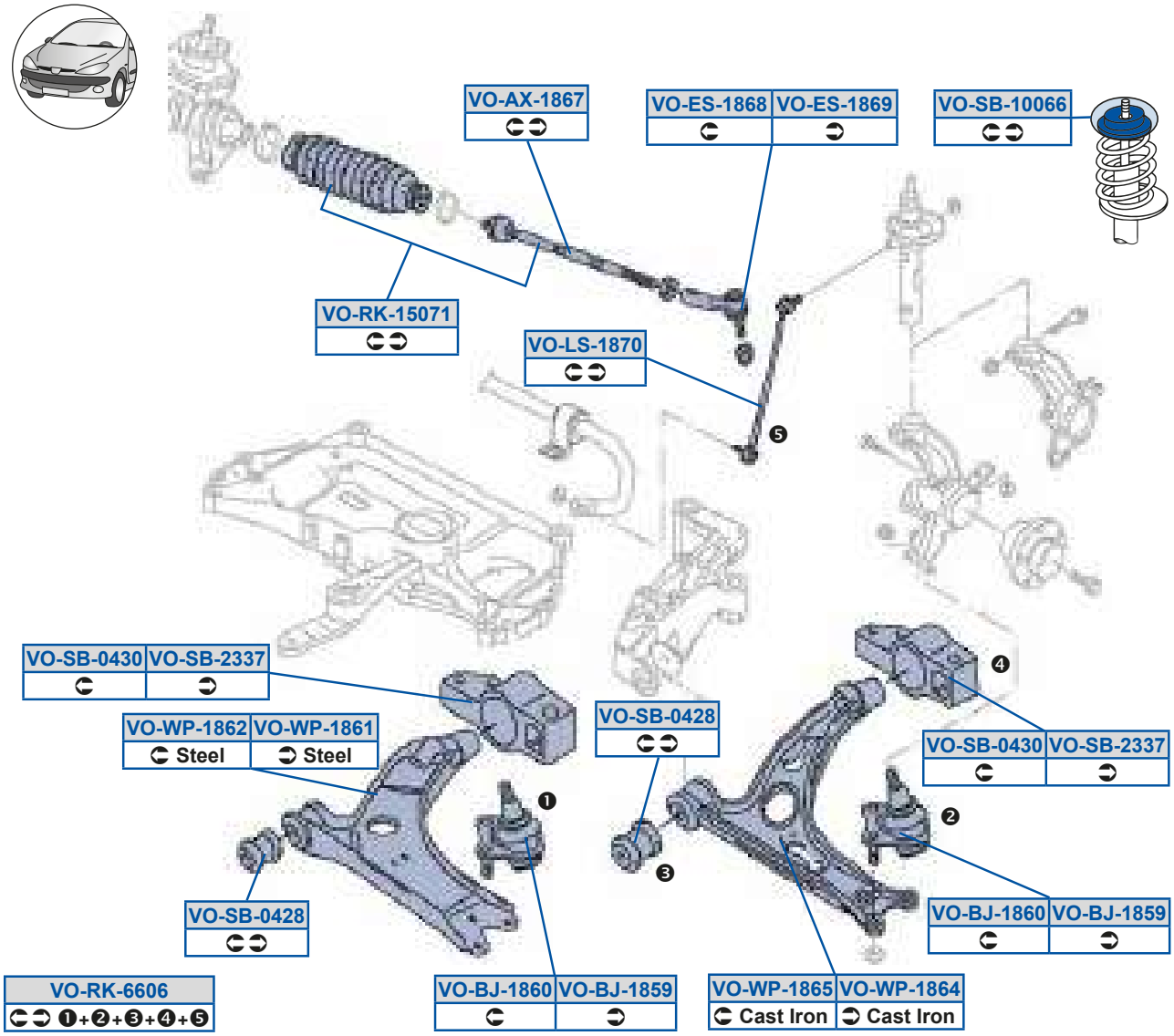
VO-AX-1867
VO-ES-1868
VO-ES-1869
VO-SB-10066
VO-RK-15071
VO-LS-1870
❺
VO-SB-0430
VO-SB-2337
VO-WP-1862
Steel
VO-WP-1861
Steel
VO-SB-0428
❹
VO-SB-0430
VO-SB-2337
❶
❷
❸
VO-SB-0428
VO-BJ-1860
VO-BJ-1859
VO-RK-6606
❶+❷+❸+❹+❺
VO-BJ-1860
VO-BJ-1859
VO-WP-1865
Cast Iron
VO-WP-1864
Cast Iron

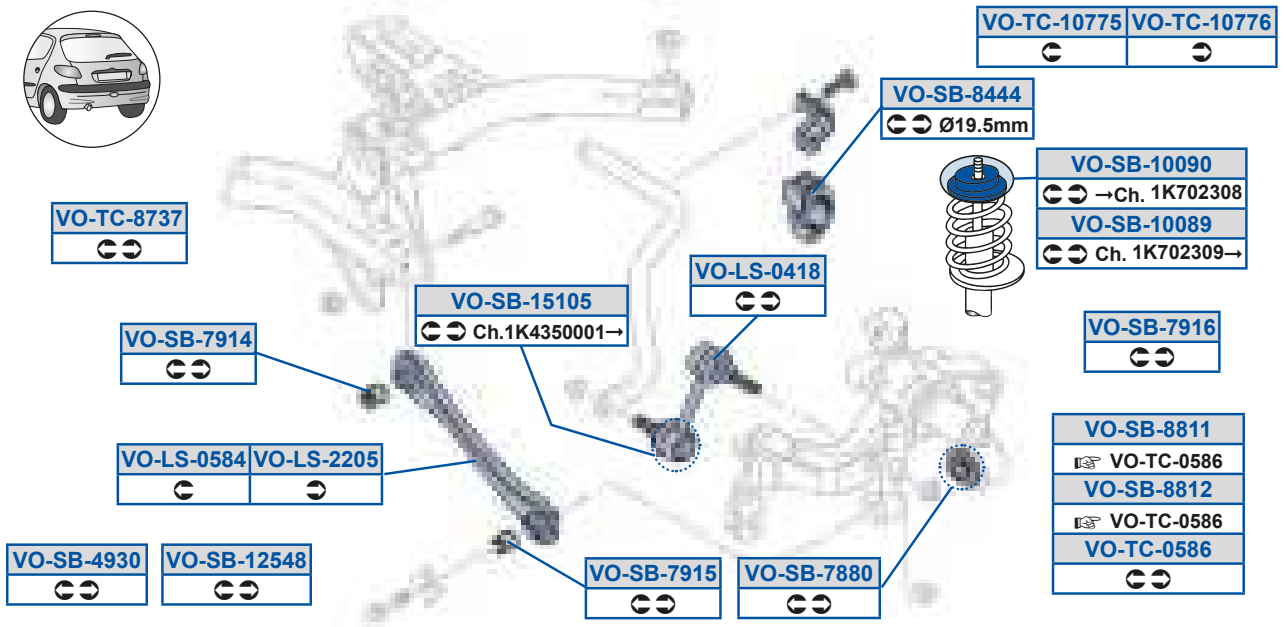
VO-TC-10775
VO-TC-10776
VO-SB-8444
Ø19.5mm
VO-SB-10090
→Ch. 1K702308
VO-SB-10089
Ch. 1K702309→
VO-TC-8737
VO-LS-0418
VO-SB-15105
Ch.1K4350001→
VO-SB-7916
VO-SB-7914
VO-SB-8811
VO-TC-0586
VO-SB-8812
VO-TC-0586
VO-LS-0584
VO-LS-2205
VO-SB-4930
VO-SB-12548
VO-SB-7915
VO-SB-7880
VO-TC-0586

g_ 5h a59FD>

8Y7B7E8C80O38Y7B7E8C80S

g_ 5h a59FDB

8Y7B7E8C90Q38Y7B7E8C9a

g_ 5h a59FDC

8Y7B7E8C80Q38Y7B7E8C8a

XSeeO Wj 09D; 1	8B798	XSeeO Wj 09D; 49DA1	8G798

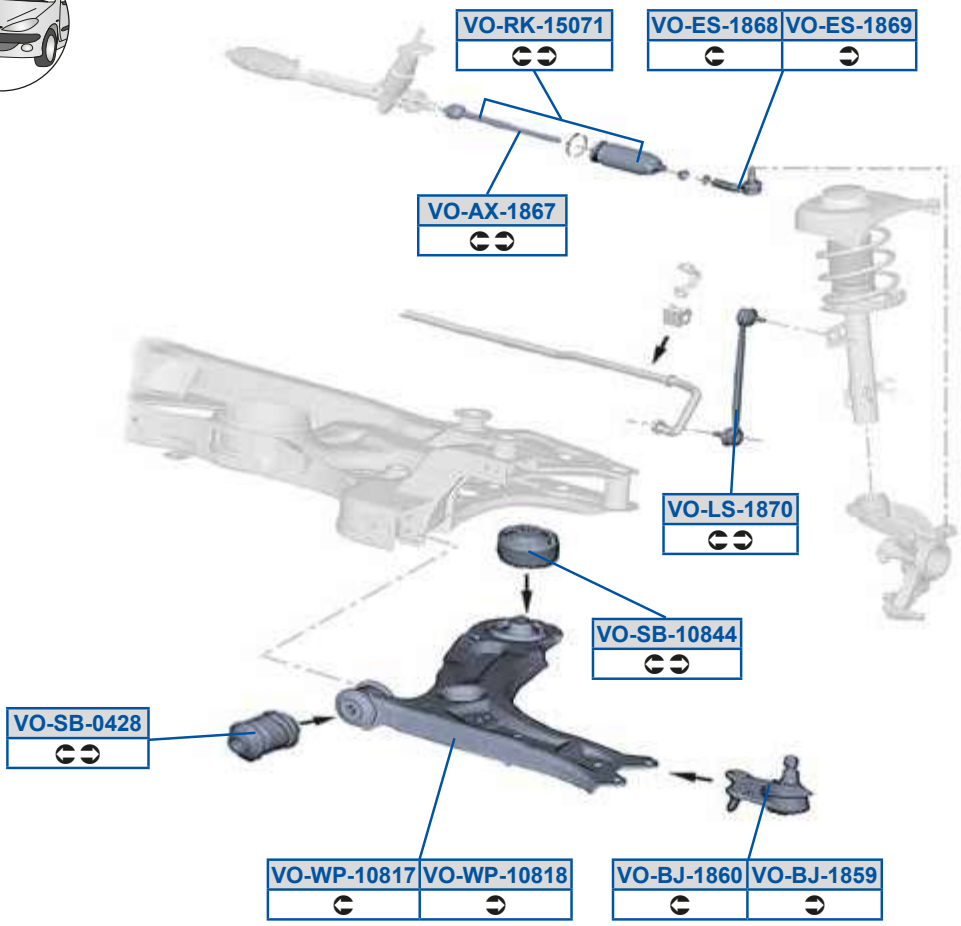

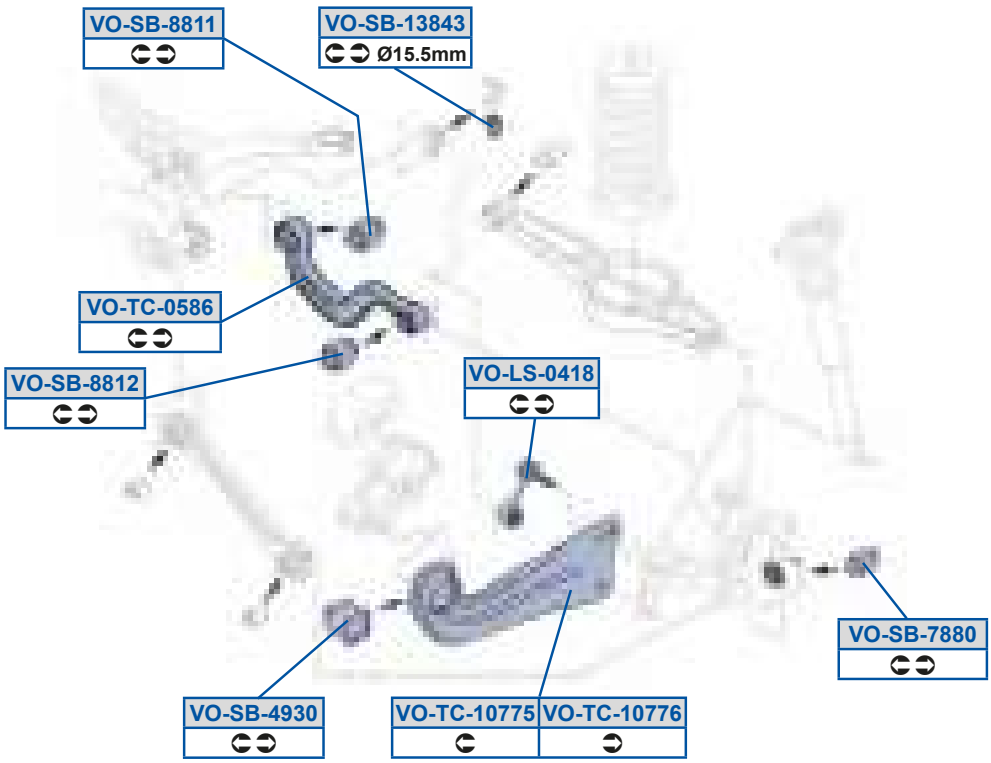

MOOG

g_ 5Oi 59FDE
8Y7B9AF87O

g_ 5dP58B>F
8Y7B7E8F938Y7B7E8F9O

g_ 5eQ598EEC
8Y7C7C99AS38Y7C7C99AV

g_ 5PX59FCG
8Y7B7EADDP38Y7B7EADDQ

g_ 5dP598FBB
8Y7B7E8FAa 38Y7B7E8FAi

g_ 5eQ598EED
8Y7C7C99BS38Y7C7C99BV

g_ 5PX59FD8
8Y7B7EADCP38Y7B7EADCQ

g_ 5dP59AFBA
8Y7C88A9EPO

g_ 5h a598F9E
CQ7B7E8C8O3CQ7B7E8C8P

g_ 5Sd59FDF
8Y7B9AF88O38Y7B9AF88P

g_ 5dP5BGA8
8Y7C7CCB8Q38Y7C7CCB8R

g_ 5h a598F9F
CQ7B7E8C9O3CQ7B7E8C9P

g_ 5Sd59FDG
8Y7B9AF89O38Y7B9AF89P

g_ 5dP5EFF8
8Y7C7CCCA38Y7C7CCCAO

g_ 5Zd58B9F
8Y7C7CBDCO038Y7C7CBDCQ

g_ 5dP5FF99
8Y7C7C9EGO

g_ 5Zd59FE8
8Y7B88A8CP38Y7B88A8CX

g_ 5dP5FF9>
8Y7C7C97AO

g_ 5cY59C8E9
8Y7B9AF87O

g_ 5eQ58CFD
8Y7C7CA9AV38Y7C7CA9Ad

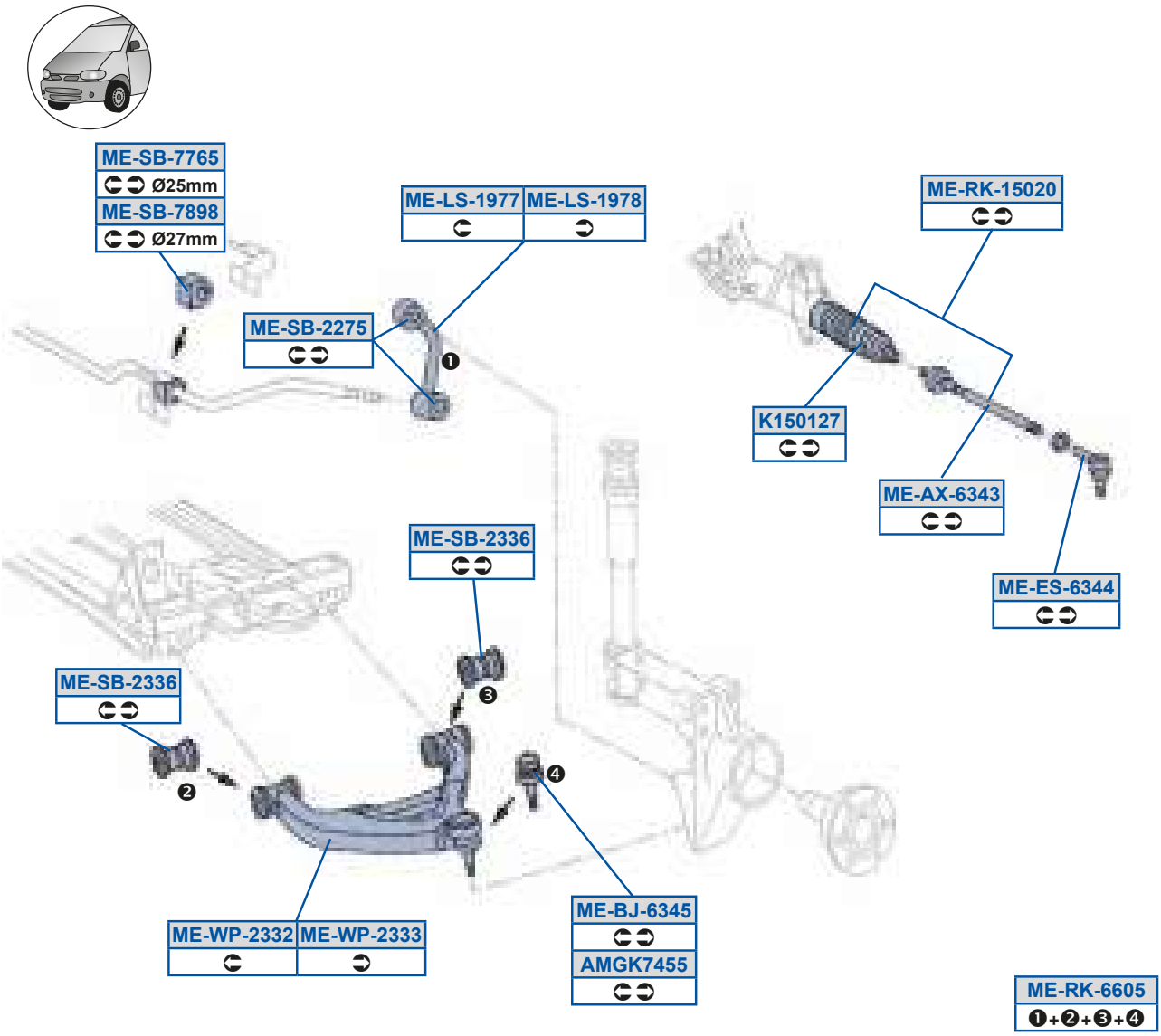
ME-SB-7765
Ø25mm
ME-SB-7898
Ø27mm
ME-LS-1977
ME-LS-1978
ME-RK-15020
ME-SB-2275
K150127
ME-AX-6343
ME-ES-6344
ME-SB-2336
ME-SB-2336
ME-WP-2332
ME-WP-2333
ME-BJ-6345
AMGK7455
ME-RK-6605
❶+❷+❸+❹

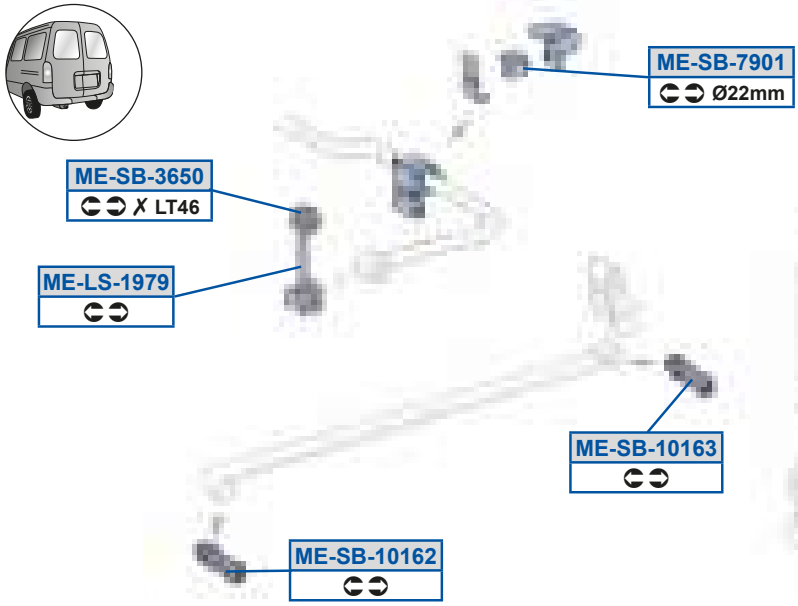
ME-SB-7901
Ø22mm
ME-SB-3650
✗ LT46
ME-LS-1979
ME-SB-10163
ME-SB-10162

O[UYEBCC
9R7B7EAD839R7B7EAD8O

Y9C89>E
9R7B99D8A39R7B99FA8

[S5Oi 5DABA
9R7B99F7A3G78BD778CC

[S5PX5DABC
9R7B7EAD839R7B7EAD8O

[S5Sd5DABB
9R7B99F88

[S5Zd59GEE
9R7B887C8

[S5Zd59GEF
9R7B887C9

[S5Zd59GEG
9R7C88A9G

[S5c Y59C8>8
9R7B99F7A3G78BD778CC

[S5c Y5DD8C

[S5dP5989D>
9R7C888E8

[S5dP5989DA
9R7C888E8P39R7C888E8Q

[S5dP5>>EC
9R7 B88 7B8 0

[S5dP5>AAD
9R7B7E8B739R7C888E8

[S5dP5ADC8
9R7C88B8A

[S5dP5EEDC
9R7B887B8P

[S5dP5EFGF
9R7C88B8AP

[S5dP5EG89
9R7C88B8AO

[S5h a5>AA>
9R7B7E79839R7B7E798P

[S5h a5>AAA
9R7B7E79939R7B7E799P

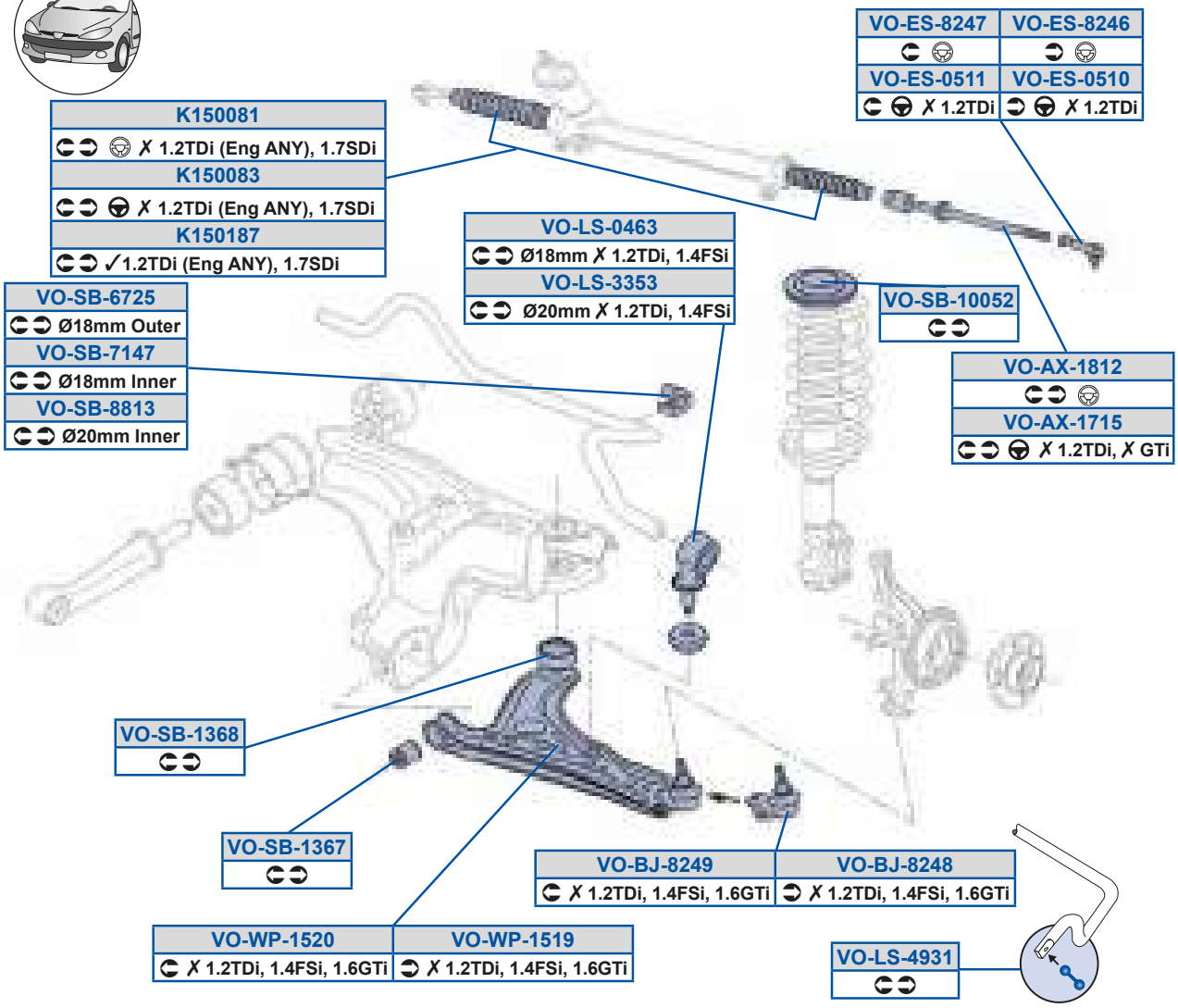
K150081
✗ 1.2TDi (Eng ANY), 1.7SDi
K150083
✗ 1.2TDi (Eng ANY), 1.7SDi
K150187
✓1.2TDi (Eng ANY), 1.7SDi
VO-ES-8247
VO-ES-8246
VO-ES-0511
✗ 1.2TDi
VO-ES-0510
✗ 1.2TDi
VO-LS-0463
Ø18mm ✗ 1.2TDi, 1.4FSi
VO-LS-3353
Ø20mm ✗ 1.2TDi, 1.4FSi
VO-SB-10052
VO-SB-6725
Ø18mm Outer
VO-SB-7147
Ø18mm Inner
VO-SB-8813
Ø20mm Inner
VO-AX-1812
VO-AX-1715
✗ 1.2TDi, ✗ GTi
VO-SB-1368
VO-SB-1367
VO-BJ-8249
✗ 1.2TDi, 1.4FSi, 1.6GTi
VO-BJ-8248
✗ 1.2TDi, 1.4FSi, 1.6GTi
VO-WP-1520
✗ 1.2TDi, 1.4FSi, 1.6GTi
VO-WP-1519
✗ 1.2TDi, 1.4FSi, 1.6GTi
VO-LS-4931

VO-SB-4482

Y9C88F9
Dd7B8GFA8

g_ 5Sd58C99
DS7B8GF883DS7B8GF89

g_ 5dP59ADF
Dd7B7E8F8

Y9C88FA
DS7B8GFA83Dd7B99FA8

g_ 5Sd5F>BD
Dd7B88F893Dd7B8GF89

g_ 5dP5BBF>
Dd7C78CB8R

Y9C89FE
DS7B8GFA8

g_ 5Sd5F>BE
Dd7B88F883Dd7B8GF88

g_ 5dP5DE>C
8G8B88A8B

g_ 5Oi 59E9C
D 7B99F7A0 /40

g_ 5Zd58BDA
Dd7B88A8C3Dd7B88A8CQ

g_ 5dP5E9BE
D 7B88A8A

g_ 5Oi 59F9>
D 7B8GF7A0 /40

g_ 5Zd5AACA
Dd7B88A8C03Dd7B88A8CP

g_ 5dP5FF9A
D 7B88A8A0

g_ 5PX5F>BF
DS7B7EADC3Dd7B7EADC0

g_ 5Zd5BGA9
DS7B88A8C

g_ 5h a59C9G
Dd7B7E8C803D 7B7E8C80

g_ 5PX5F>BG
DS7A7EADD3Dd7B7EADC

g_ 5dP5988C>
8X7B899BG3Dd7B89AA8

g_ 5h a59C>8
Dd7B7E8C803D 7B7E8C80

g_ 5Sd58C98
DS7B8GF883DS7B8GF89

g_ 5dP59ADE
Dd7B7E8F9

VO-ES-8283	VO-ES-8285
⊂ →Ch. 1C-W047124	⊃ →Ch. 1C-W047124
VO-ES-1507	VO-ES-1506
⊂ Ch. 1C-W047125→	⊃ Ch. 1C-W047125→

VO-SB-6818
⊂⊃ Ø17mm
VO-SB-13250
⊂⊃ Ø19mm
VO-SB-7422
⊂⊃ Ø20mm
AU-SB-4847
⊂⊃ Ø21mm
VO-SB-6796
⊂⊃ Ø23mm

K150182
⊂⊃ ✓ Hatchback
K150231
⊂⊃ ✓ Cabrio

VO-AX-8286
⊂⊃ →Ch. 1C-W047124
VO-AX-13741
⊂⊃ Ch. 1C-W047125→
AU-AX-6982
⊂⊃ ✓ RSi

AU-SB-7331
⊂⊃ ✓ RSi

VO-SB-10053
⊂⊃

VO-SB-4523
⊂⊃

VO-SB-1369
⊂⊃

VO-DS-8281	VO-DS-8284
⊂ →Ch. 1C-W047124	⊃ →Ch. 1C-W047124
VO-DS-1549	VO-DS-1548
⊂ Ch. 1C-W047125→	⊃ Ch. 1C-W047125→

VO-RK-15052
⊂⊃ Ch. 1C-W047125→ ✗ Cabrio
VO-RK-15061
⊂⊃ Ch. 1C-W047125→ ✓ Cabrio

VO-SB-1329
⊂⊃

VO-LS-0475
⊂⊃ Fe ⊥↔ 105mm Ø23mm
VO-LS-4916
⊂⊃ ✓ P Ø21mm
VO-LS-7327
⊂⊃ ✓ P Ø23mm

VO-WP-1553	VO-WP-1552
⊂	⊃

VO-BJ-8287	VO-BJ-8288
⊂	⊃

VO-RK-4853
⊂⊃ ❶+❷+❸+❹

VO-SB-10063
⊂⊃

VO-SB-0042	VO-SB-4857
⊂⊃ Ø72mm	⊂⊃ Ø69mm

Of 5Oi 5DGF>
Fd7B99F7ER

g_ 5PX5F>FF
8X7B7EADD038X7B7EADDP

g_ 5Sd5F>FC
8X7B99F8938X7B99F89O

g_ 5dP5988CA
8V7B89ADC038X7B899BG

Of 5dP5BFBE
8X7B88A8BQ

g_ 5Rd59CBF
8X7B99F7BO38X7B99F7BP

g_ 5Zd53BEC
8X7B88A8C38X7B88A8CP

g_ 5dP5988DA
8X7C8AACAP38X7C8AACAQ

Of 5dP5EAA9
Fd7B7E8F8P

g_ 5Rd59CBG
8X7B99F7AO38X7B99F7AP

g_ 5Zd5BG9D
8X7B88A8C38X7B88A8CP

g_ 5dP59A>C8
8X7B88A8Bn

Y9C89F>
8X7B99FA838X7B99FA8P

g_ 5Rd5F>F9
8X7B99F7A38X7B99F7AO

g_ 5Zd5EA>E
8X7B88A8CV38X7B88A8CY

g_ 5dP59A>G
8G8B7E8F93ACEB7E8F9

Y9C8>A9
8X7B99FA8P

g_ 5Rd5F>FB
8X7B99F7B38X7B99F7BO

g_ 5c Y59C8C>
8X7B99F7AP38X7B99F7EP

g_ 5dP59ADG
8X7B7E8F838X7B7E8F8O

g_ 5Oi 59AEB9
8X7B99F7AP38X7B99F7BP

g_ 5Sd59C8D
8X7B99F89P38X7B99F89S

g_ 5c Y59C8D9
8X7B99F7AP38X7B99F7EP

g_ 5dP5BC>A
8X78GGB9G

g_ 5Oi 5F>FD
8V7B99F7A /40

g_ 5Sd59C8E
8X7B99F88P38X7B99F88S

g_ 5c Y5BFCA

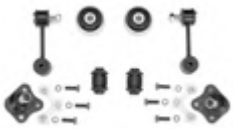

g_ 5dP5BFCE
8X7C78CB8R

g_ 5PX5F>FE
8X7B7EADC038X7B7EADCP

g_ 5Sd5F>FA
8X7B99F8838X7B99F88O

g_ 5dP588B>
8X7C78CB8Q

g_ 5dP5DEGD
8X7B88A8BU38X7B88A8Bt

VO-ES-8283	VO-ES-8285
⊂ →Ch. 1C-W047124	⊃ →Ch. 1C-W047124
VO-ES-1507	VO-ES-1506
⊂ Ch. 1C-W047125→	⊃ Ch. 1C-W047125→

VO-SB-6818
⊂⊃ Ø17mm
VO-SB-13250
⊂⊃ Ø19mm
VO-SB-7422
⊂⊃ Ø20mm
AU-SB-4847
⊂⊃ Ø21mm
VO-SB-6796
⊂⊃ Ø23mm

K150182
⊂⊃ ✓ Hatchback
K150231
⊂⊃ ✓ Cabrio

VO-AX-8286
⊂⊃ →Ch. 1C-W047124
VO-AX-13741
⊂⊃ Ch. 1C-W047125→
AU-AX-6982
⊂⊃ ✓ RSi

AU-SB-7331
⊂⊃ ✓ RSi

VO-SB-10053
⊂⊃

VO-SB-4523
⊂⊃

VO-SB-1369
⊂⊃

VO-DS-8281	VO-DS-8284
⊂ →Ch. 1C-W047124	⊃ →Ch. 1C-W047124
VO-DS-1549	VO-DS-1548
⊂ Ch. 1C-W047125→	⊃ Ch. 1C-W047125→

VO-RK-15052
⊂⊃ Ch. 1C-W047125→ ✗ Cabrio
VO-RK-15061
⊂⊃ Ch. 1C-W047125→ ✓ Cabrio

VO-SB-1329
⊂⊃

VO-LS-0475
⊂⊃ Fe ⊥↔ 105mm Ø23mm
VO-LS-4916
⊂⊃ ✓ P Ø21mm
VO-LS-7327
⊂⊃ ✓ P Ø23mm

VO-WP-1553	VO-WP-1552
⊂	⊃

VO-BJ-8287	VO-BJ-8288
⊂	⊃

VO-RK-4853
⊂⊃ ❶+❷+❸+❹

VO-SB-10063
⊂⊃

VO-SB-0042	VO-SB-4857
⊂⊃ Ø72mm	⊂⊃ Ø69mm

g_ 5dP5DF9F
8X7B88A8B38X7B88A8Bo

g_ 5dP5EB>>
8X7B88A8Bi

g_ 5h a59OC>
8X7B7E8C8038X7B7E8C8P

g_ 5h a59OCA
8X7B7E8C8038X7B7E8C8P

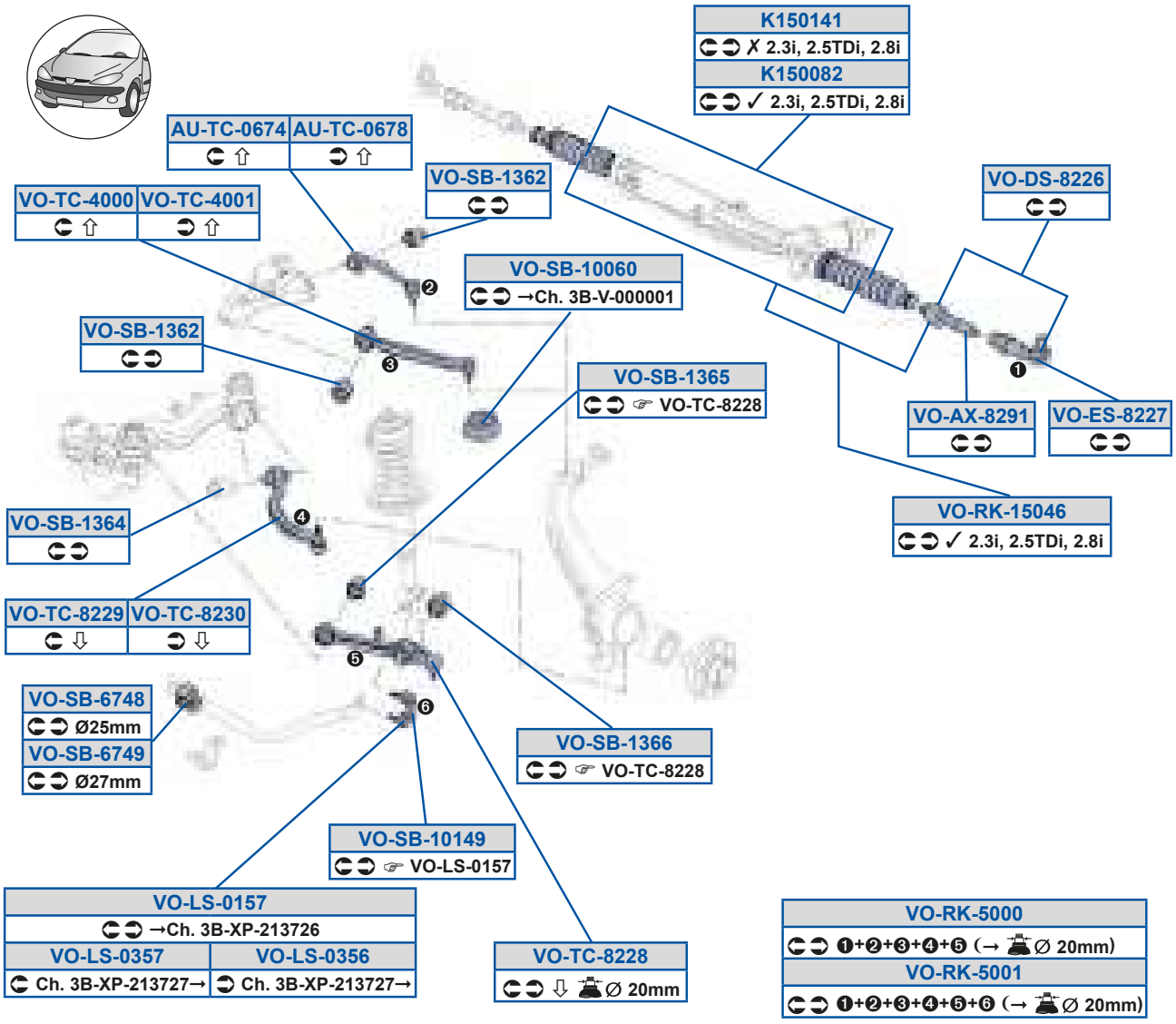
K150141
✗ 2.3i, 2.5TDi, 2.8i
K150082
✓ 2.3i, 2.5TDi, 2.8i
AU-TC-0674
AU-TC-0678
VO-SB-1362
VO-TC-4000
VO-TC-4001
VO-DS-8226
VO-SB-10060
→Ch. 3B-V-000001
VO-SB-1362
VO-SB-1365
VO-TC-8228
VO-AX-8291
VO-ES-8227
VO-RK-15046
✓ 2.3i, 2.5TDi, 2.8i
VO-SB-1364
VO-TC-8229
VO-TC-8230
VO-SB-6748
Ø25mm
VO-SB-6749
Ø27mm
VO-SB-1366
VO-TC-8228
VO-SB-10149
VO-LS-0157
VO-LS-0157
→Ch. 3B-XP-213726
VO-LS-0357
Ch. 3B-XP-213727→
VO-LS-0356
Ch. 3B-XP-213727→
VO-TC-8228
Ø 20mm
VO-RK-5000
❶+❷+❸+❹+❺ (→ Ø 20mm)
VO-RK-5001
❶+❷+❸+❹+❺+❻ (→ Ø 20mm)

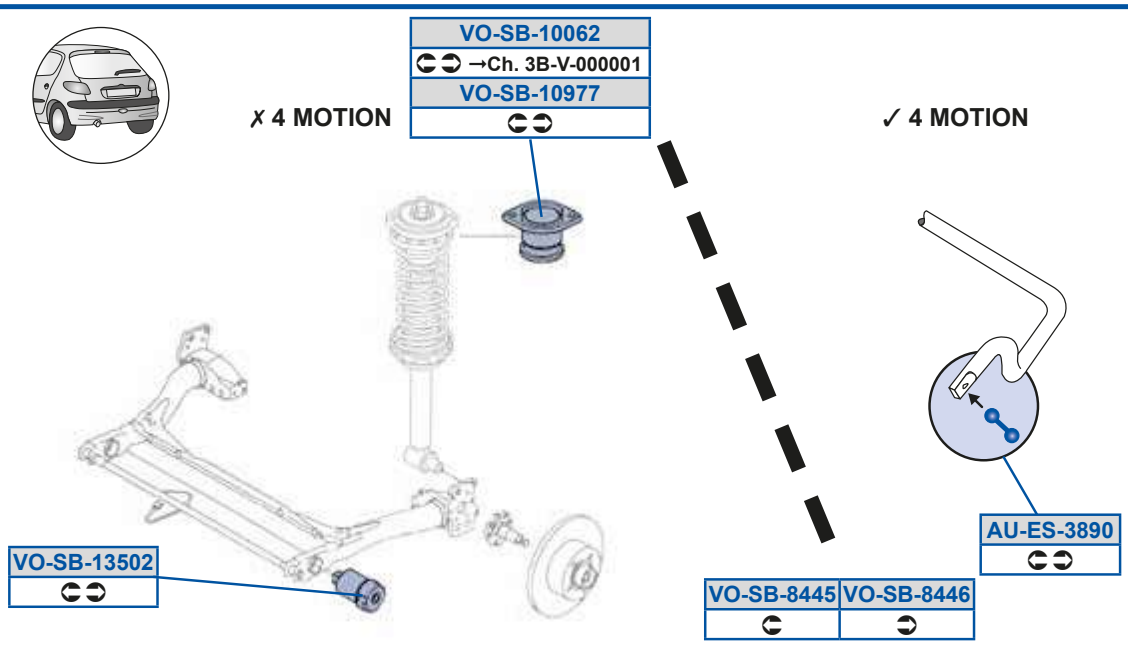
VO-SB-10062
→Ch. 3B-V-000001
VO-SB-10977
✗ 4 MOTION
✓ 4 MOTION
VO-SB-13502
AU-ES-3890
VO-SB-8445
VO-SB-8446

Of 5Sd5AFG8
FS7C7CBDCQ3FS7C7CBDCR

g_ 5Zd589CE
BR7B88A8ER3BR7B88A8EU

g_ 5dP5989BG
FR7B88A8ER /40

g_ 5dP5DEBG
BR7B88A9ET3BR7B88A9EV

Of 5eQ58DEB
BR7B7EC7GX3BR7B7EC7GY

g_ 5Zd58ACD
FR7B88A8FR

g_ 5dP598GEE
BT74C8A4ACA03BT74C8A4ACAP

g_ 5dP5FBBC
BP7C78C98R3BP7C78C98S

Of 5eQ58DEF
BR7B7EC87X3BR7B7EC87Y

g_ 5Zd58ACE
FR7B88A8ER

g_ 5dP59AC8>
FS7C7C8BCT3FS7C7C8BCa

g_ 5dP5FBBD
BP7C78C99R3BP7C78C99S

Y9C88F>
BR7B8GFA8P3BR7B8GFA8R

g_ 5cY59C8BD
BR7B8GF78P /40

g_ 5dP59AD>
BP7B7EC8C3BR7B7EC8CQ

g_ 5eQ5B888
FR7B7EC7C03FR7B7EC7CP

Y9C89B9
BR7B8GFA8P3BR7B8GFA8R

g_ 5cY5C888
FR7BGFGGF

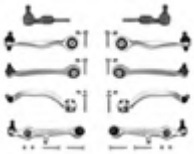

g_ 5dP59ADB
BR7B7E8FA0P3BR7B7E8FA0Q

g_ 5eQ5B889
FR7B7EC7D03FR7B7EC7DP

g_ 5Oi 5F>G9
BR7B8GF78P /40

g_ 5cY5C889
FR7BGFGGFo8

g_ 5dP59ADC
BR7B7E8F9S3BR7B7E8F9U

g_ 5eQ5F>>F
BR7B7E8C803BR7B7E8C8P

g_ 5Rd5F>>D
BP7B8GF78P3BP7B8GF78S

g_ 5dP5988D8
BR7B89AEET3B EDGFC7E

g_ 5dP59ADD
BR7B7E8F8T3BR7B7E8F8V

g_ 5eQ5F>>G
BR7B7EDGA0Q3BR7B7EDGA0R

g_ 5Sd5F>>E
BP7B8GF88P3BP7B8GF88Q

g_ 5dP5988D>
FSe C8AACAP3FSe C8AACAR

g_ 5dP5DEBF
BR7B88A9ES3BR7B88A9EU

g_ 5eQ5F>A8
BR7B7EDGB0Q3BR7B7EDGB0R

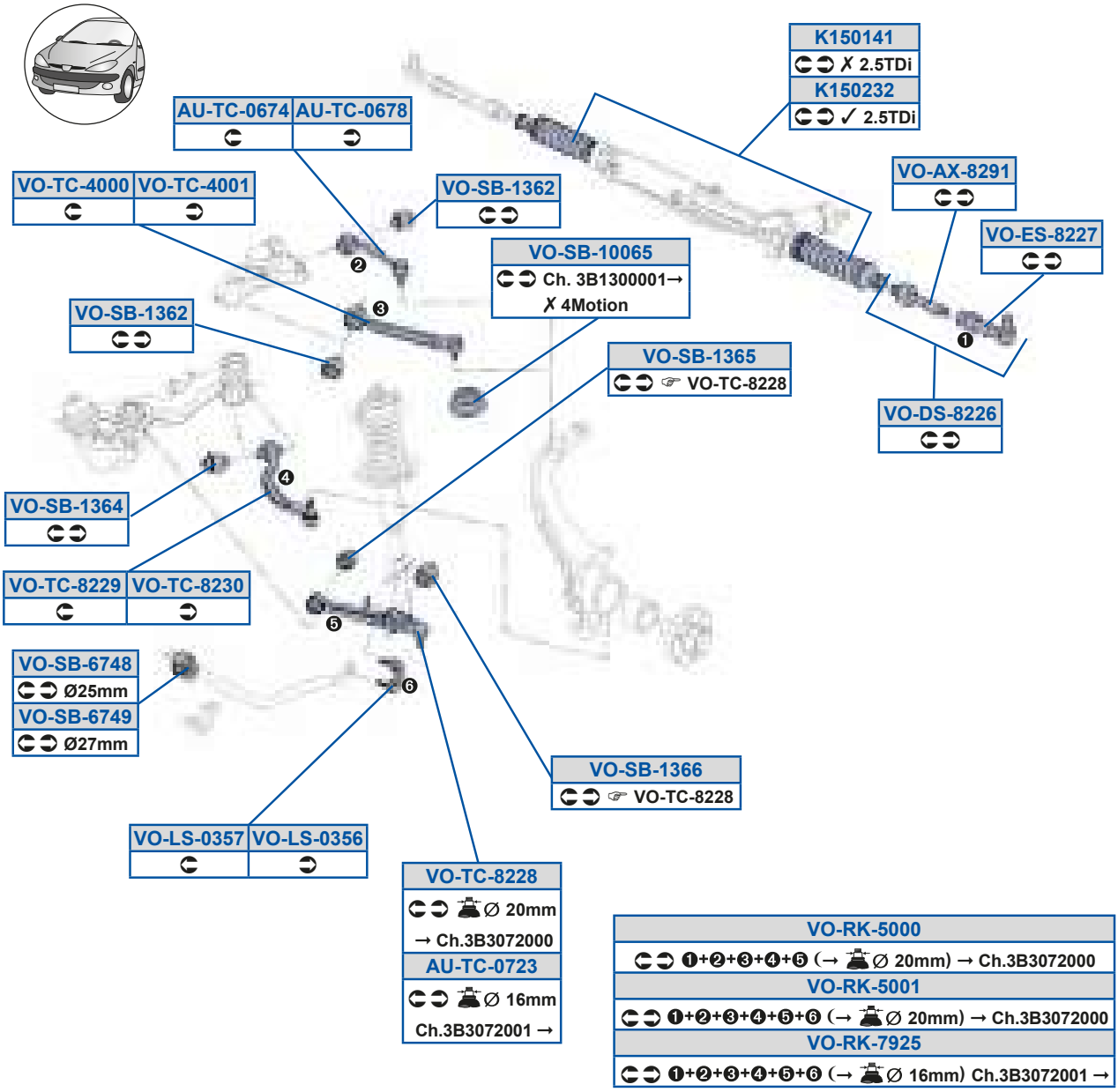
K150141
✗ 2.5TDi
K150232
✓ 2.5TDi
AU-TC-0674
AU-TC-0678
VO-TC-4000
VO-TC-4001
VO-SB-1362
VO-SB-10065
Ch. 3B1300001→
✗ 4Motion
VO-AX-8291
VO-ES-8227
VO-SB-1362
VO-SB-1365
VO-TC-8228
VO-DS-8226
VO-SB-1364
VO-TC-8229
VO-TC-8230
VO-SB-6748
Ø25mm
VO-SB-6749
Ø27mm
VO-SB-1366
VO-TC-8228
VO-LS-0357
VO-LS-0356
VO-TC-8228
Ø 20mm
→ Ch.3B3072000
AU-TC-0723
Ø 16mm
Ch.3B3072001 →
VO-RK-5000
❶+❷+❸+❹+❺ (→ Ø 20mm) → Ch.3B3072000
VO-RK-5001
❶+❷+❸+❹+❺+❻ (→ Ø 20mm) → Ch.3B3072000
VO-RK-7925
❶+❷+❸+❹+❺+❻ (→ Ø 16mm) Ch.3B3072001 →

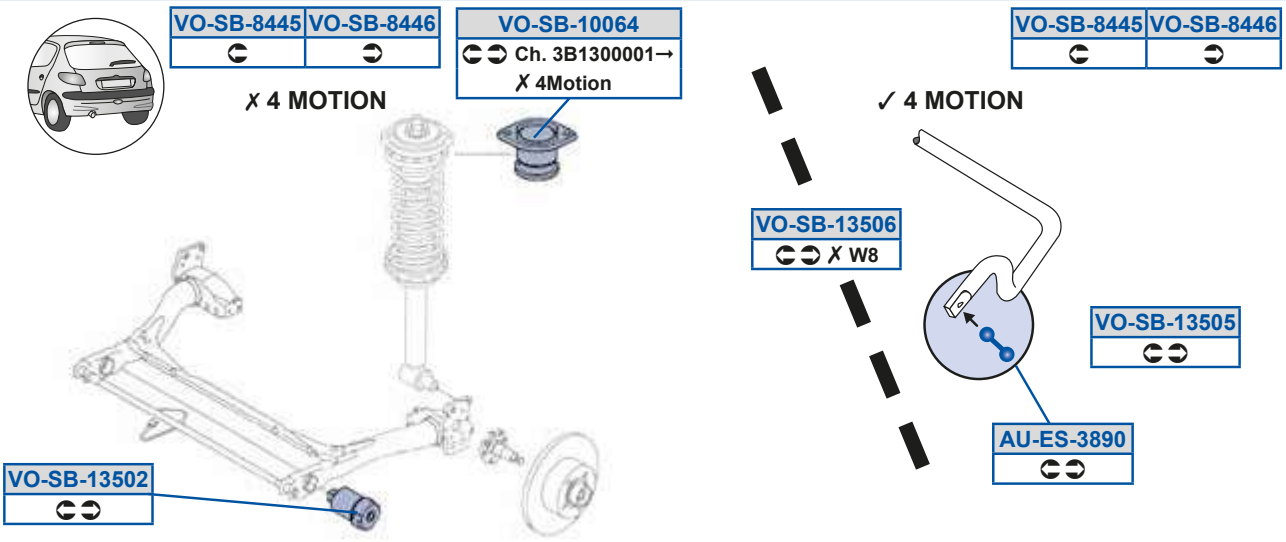
VO-SB-8445
VO-SB-8446
✗ 4 MOTION
VO-SB-10064
Ch. 3B1300001→
✗ 4Motion
VO-SB-8445
VO-SB-8446
✓ 4 MOTION
VO-SB-13506
✗ W8
VO-SB-13505
AU-ES-3890
VO-SB-13502

MOOG

Of 5Sd5AFG8
FS7C7CBDCQ3FS7C7CBDCR

g_ 5Sd5F>>E
BP7B8GF88P3BP7B8GF88Q

g_ 5dP59AC8>
FS7C7C8BCT3FS7C7C8BCa

g_ 5dP5DEBG
BR7B88A9ET3BR7B88A9EV

Of 5eQ58DEB
BR7B7EC7GX3BR7B7EC7GY

g_ 5Zd58ACD
FR7B88A8FR

g_ 5dP59AC8C
FS7C7C8FCQ

g_ 5dP5FBBC
BP7C78C98R3BP7C78C98S

Of 5eQ58DEF
BR7B7EC87X3BR7B7EC87Y

g_ 5Zd58ACE
FR7B88A8ER

g_ 5dP59AC8D
FS7C7C8E90

g_ 5dP5FBBD
BP7C78C99R3BP7C78C99S

Of 5eQ58E>A
BPAB7E8C803BPAB7E8C8Q

g_ 5cY5C888
FR7BGFGGF

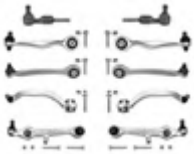

g_ 5dP59AD>
BP7B7EC8C3BR7B7EC8CQ

g_ 5eQ5B888
FR7B7EC7C03FR7B7EC7CP

Y9C89B9
BR7B8GFA8P3BR7B8GFA8R

g_ 5cY5C889
FR7BGFGGFo8

g_ 5dP59ADB
BR7B7E8FA0P3BR7B7E8FA0Q

g_ 5eQ5B889
FR7B7EC7D03FR7B7EC7DP

Y9C8>A>
BR7B8GFA8S3BR7B8GFA8Y

g_ 5cY5EG>C
BPABGFGGF

g_ 5dP59ADC
BR7B7E8F9S3BR7B7E8F9U

g_ 5eQ5F>>F
BR7B7E8C803BR7B7E8C8P

g_ 5Oi 5F>G9
BR7B8GF78P /40

g_ 5dP5988DB
AP7C8AACA

g_ 5dP59ADD
BR7B7E8F8T3BR7B7E8F8V

g_ 5eQ5F>>G
BR7B7EDGA0Q3BR7B7EDGA0R

g_ 5Rd5F>>D
BP7B8GF78P3BP7B8GF78S

g_ 5dP5988DC
APEB89AEE0

g_ 5dP5DEBF
BR7B88A9ES3BR7B88A9EU

g_ 5eQ5F>A8
BR7B7EDGB0Q3BR7B7EDGB0R

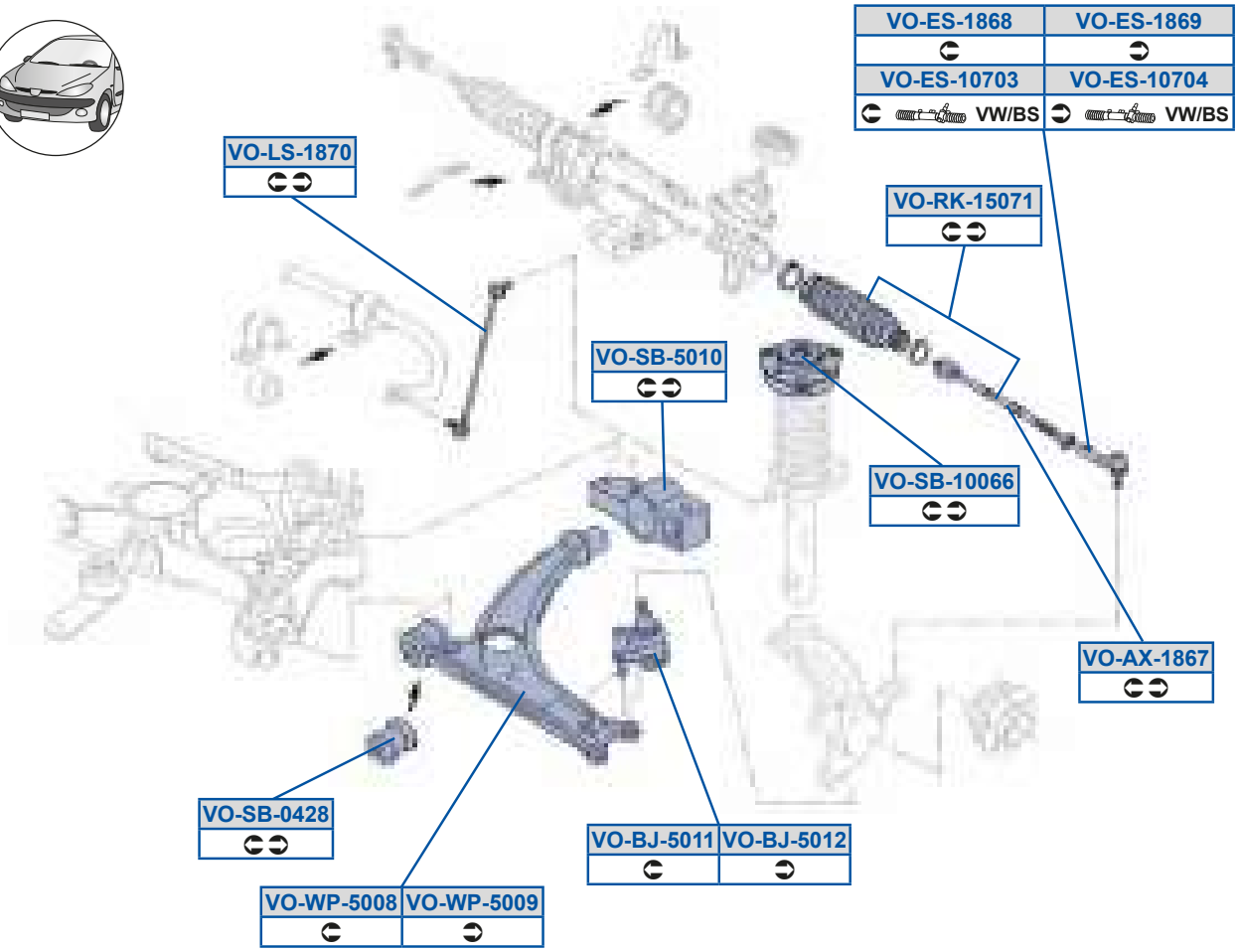
VO-ES-1868
VO-ES-1869
VO-ES-10703
VO-ES-10704
VW/BS
VW/BS
VO-LS-1870
VO-RK-15071
VO-SB-5010
VO-SB-10066
VO-AX-1867
VO-SB-0428
VO-BJ-5011
VO-BJ-5012
VO-WP-5008
VO-WP-5009

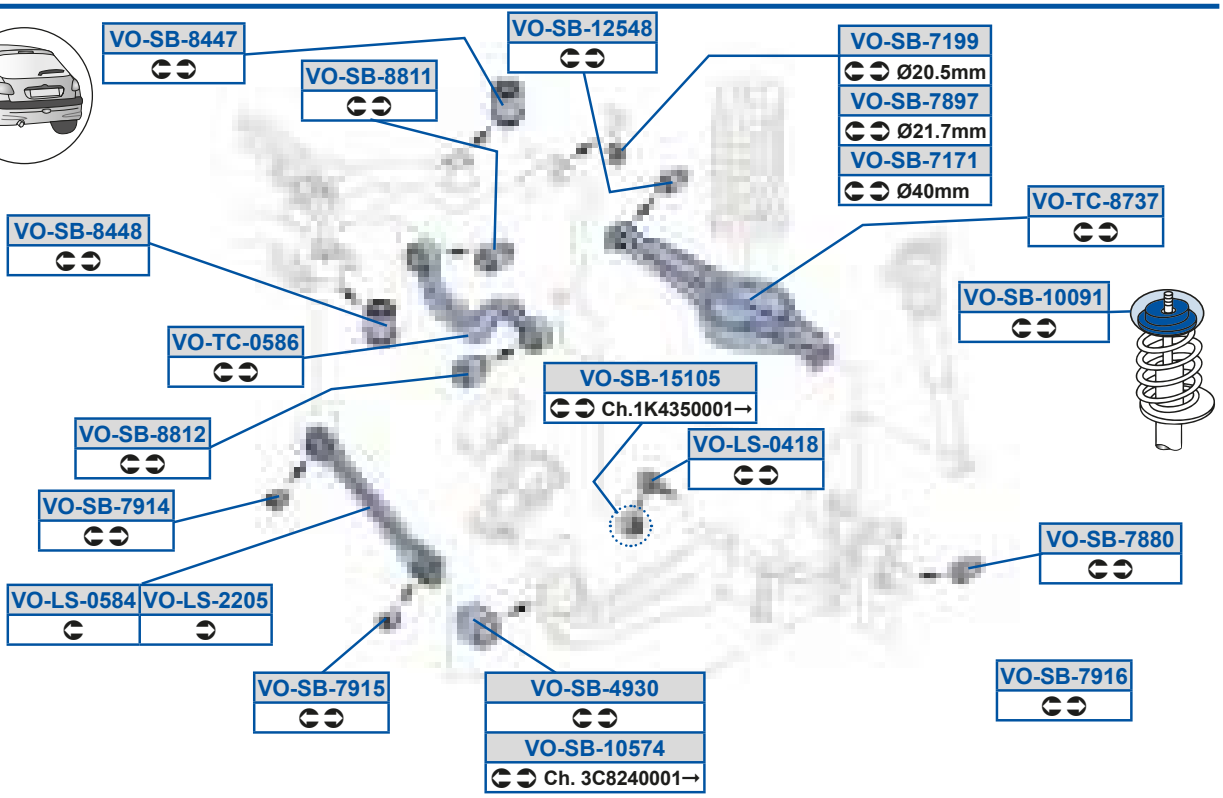
VO-SB-8447
VO-SB-12548
VO-SB-8811
VO-SB-7199
Ø20.5mm
VO-SB-7897
Ø21.7mm
VO-SB-7171
Ø40mm
VO-TC-8737
VO-SB-8448
VO-SB-10091
VO-TC-0586
VO-SB-15105
Ch.1K4350001→
VO-SB-8812
VO-LS-0418
VO-SB-7914
VO-SB-7880
VO-LS-0584
VO-LS-2205
VO-SB-7915
VO-SB-4930
VO-SB-10574
Ch. 3C8240001→
VO-SB-7916

g_ 5Oi 59FDE
8Y7B9AF87O

g_ 5Zd58CFB
8Y7C78C9GS38Y7C78C9GT

g_ 5dP59>CBF
8Y7C7CCCA38Y7C7CCCAO

g_ 5dP5EG9C
8Y7C7CCBAO

g_ 5PX5C899
AQ7B7EADCO3AQ7B7EADCP

g_ 5Zd59FE8
8Y7B88A8CP38Y7B88A8CX

g_ 5dP5BGA8
8Y7C7CCB8Q38Y7C7CCB8R

g_ 5dP5EG9D
8Y7C7C8E8Q38Y7C7C8EAQ

g_ 5PX5C89>
AQ7B7EADDO3AQ7B7EADDP

g_ 5Zd5>>8C
8Y7C78CA7P38Y7C78CA7Q

g_ 5dP5C898
AQ78GG9A8O3AQ78GG9A8P

g_ 5dP5FBBE
8Y7C7C8BCS38Y7C7C8BCU

g_ 5Sd598E8A
8Y7B9AF88O38Y7B9AF88Q

g_ 5c Y59C8E9
8Y7B9AF87O

g_ 5dP5E9E9
8Y7C88BAGS

g_ 5dP5FBBF
8Y7C7C8BCT38Y7C7C8BCV

g_ 5Sd598E8B
8Y7B9AF89O38Y7B9AF89Q

g_ 5dP58B>F
8Y7B7E8F938Y7B7E8F9O

g_ 5dP5E9GG
8Y7C88A9EOn

g_ 5dP5FF99
8Y7C7C9EGO

g_ 5Sd59FDF
8Y7B9AF88O38Y7B9AF88P

g_ 5dP5988DD
8Y7B899BGP3Dd7B899BGQ

g_ 5dP5EFF8
8Y7C7CCCA38Y7C7CCCAO

g_ 5dP5FF9>
8Y7C7C97AO

g_ 5Sd59FDG
8Y7B9AF89O38Y7B9AF89P

g_ 5dP5988G9
8Y7C8AACAX38Y7C8AACAn

g_ 5dP5EFGE
8Y7C88A9EOo

g_ 5eQ58CFD
8Y7C7CA9AV38Y7C7CA9Ad

g_ 5Zd58B9F
8Y7C7CBDCO038Y7C7CBDCQ

g_ 5dP598CEB
AQ7C7CCB8

g_ 5dP5EG9B
8Y7C78CB8Q

g_ 5eQ5FEAE
8Y7C7CA88O038Y7C7CA88OP

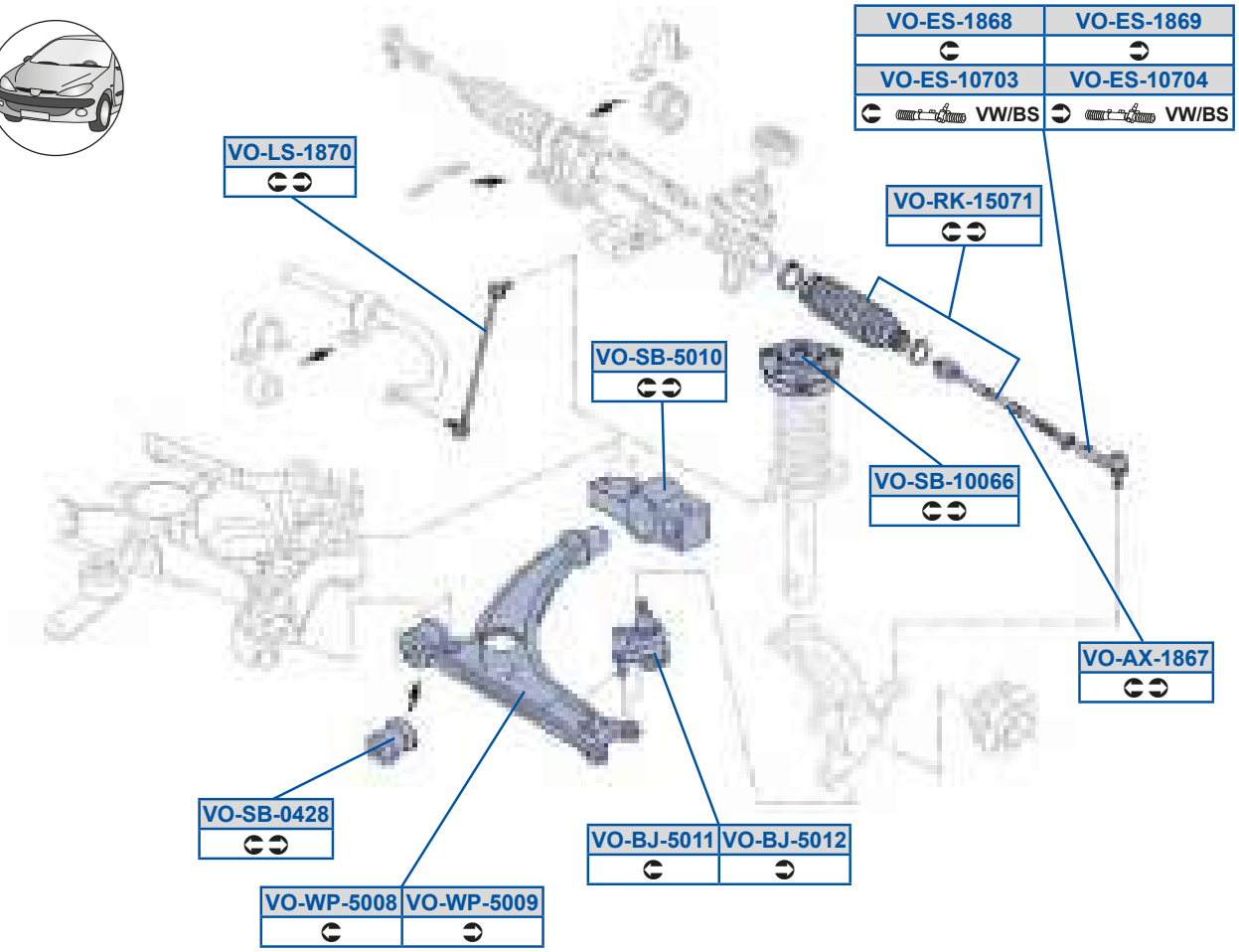
VO-ES-1868
VO-ES-1869
VO-ES-10703
VO-ES-10704
VW/BS
VW/BS
VO-LS-1870
VO-RK-15071
VO-SB-5010
VO-SB-10066
VO-AX-1867
VO-SB-0428
VO-BJ-5011
VO-BJ-5012
VO-WP-5008
VO-WP-5009

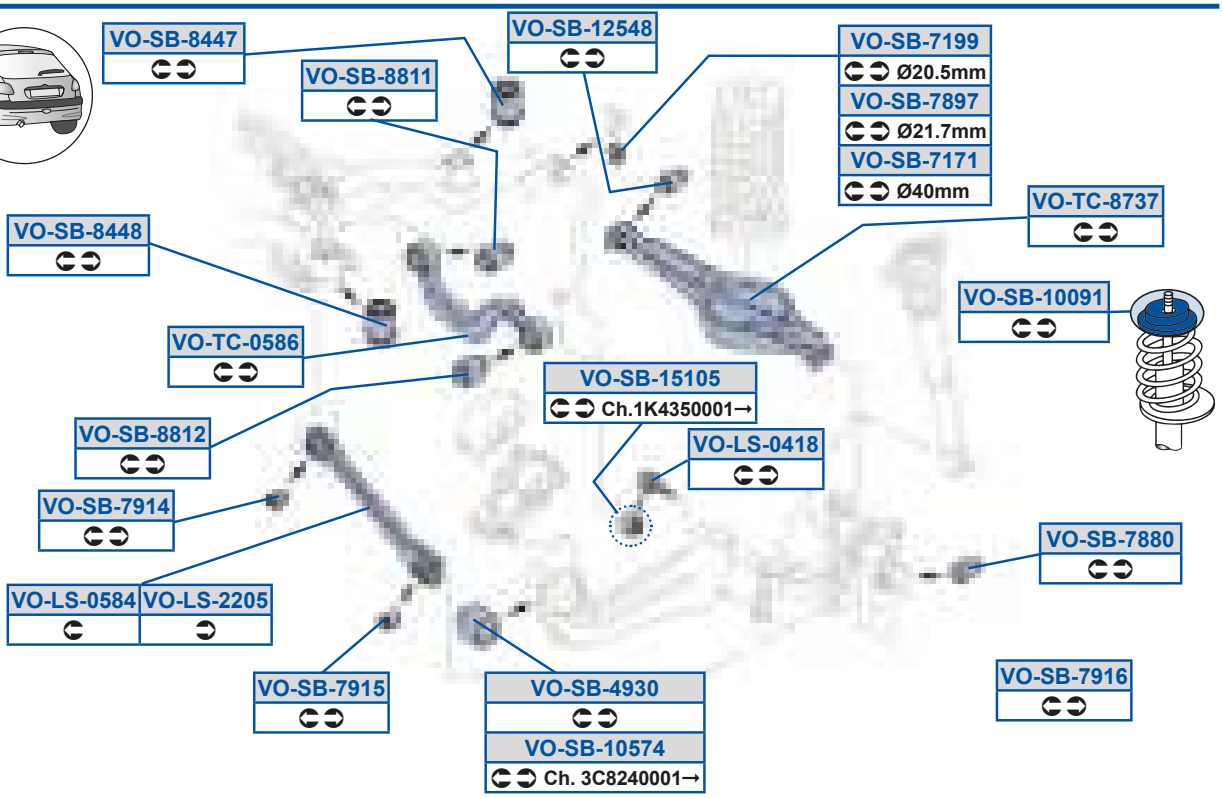
VO-SB-8447
VO-SB-12548
VO-SB-8811
VO-SB-7199
Ø20.5mm
VO-SB-7897
Ø21.7mm
VO-SB-7171
Ø40mm
VO-TC-8737
VO-SB-8448
VO-SB-10091
VO-TC-0586
VO-SB-15105
Ch.1K4350001→
VO-SB-8812
VO-LS-0418
VO-SB-7914
VO-SB-7880
VO-LS-0584
VO-LS-2205
VO-SB-7915
VO-SB-4930
VO-SB-10574
Ch. 3C8240001→
VO-SB-7916

g_ 5h a5C88F

AQ7B7E8C8O3AQ7B7E8C8P

g_ 5h a5C88G

AQ7B7E8C8O3AQ7B7E8C8P

gh

a0dd0e 0AD; 1	8F798 9; 79B	a0dd0e 0ZZec0QY 0ADC1	8979; 9; 79B
a0dd0e gt ét 0ADC1	8F798 9; 79B		

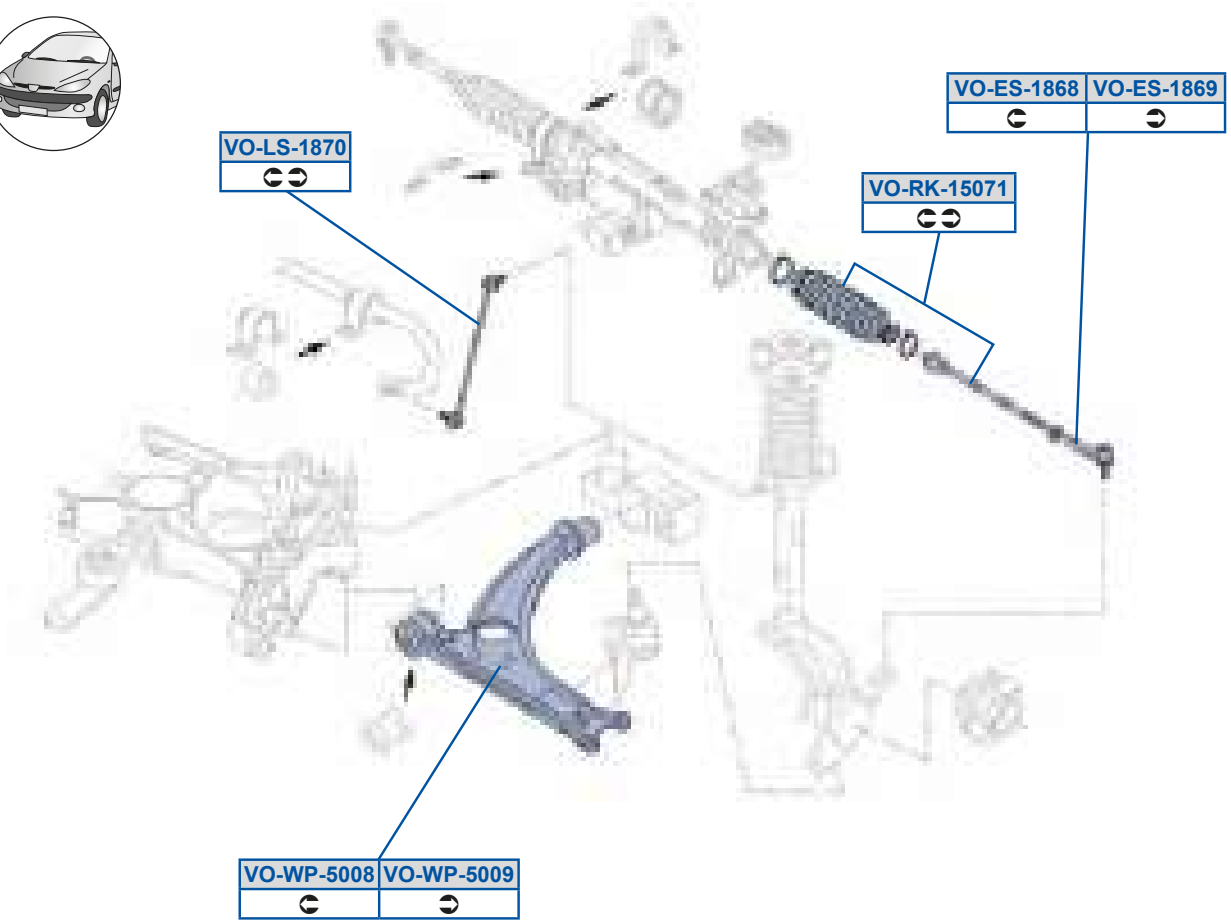

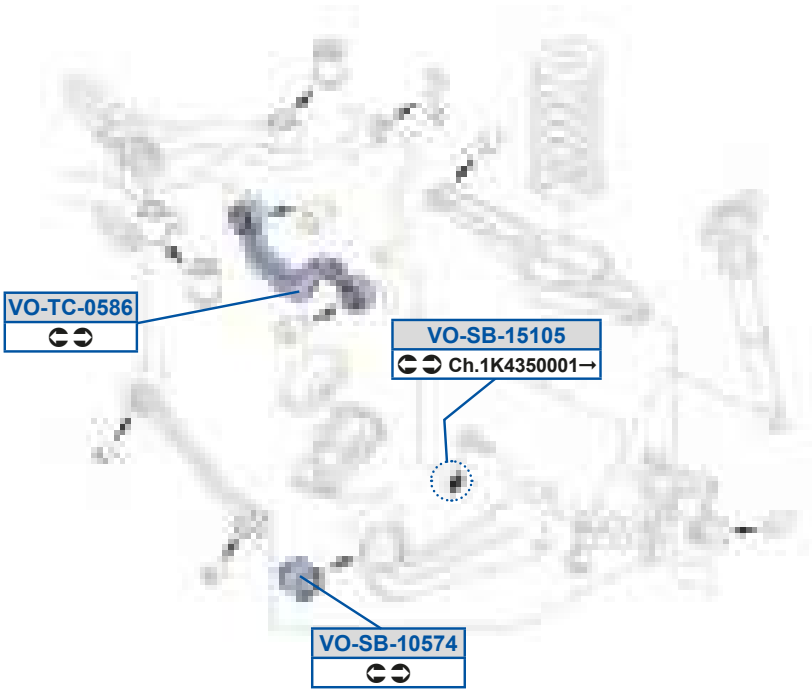

g_ 5Sd59FDF
8Y7B9AF88O38Y7B9AF88P

g_ 5Sd59FDG
8Y7B9AF89O38Y7B9AF89P

g_ 5Zd59FE8
8Y7B88A8CP38Y7B88A8CX

g_ 5cY59C8E9
8Y7B9AF87O

g_ 5dP598CEB
AQ7C7CCB8

g_ 5dP59C98C
8Y7C7CBDCQ /40

g_ 5eQ58CFD
8Y7C7CA9AV38Y7C7CA9Ad

g_ 5ha5C88F
AQ7B7E8C8O3AQ7B7E8C8P

g_ 5ha5C88G
AQ7B7E8C8O3AQ7B7E8C8P

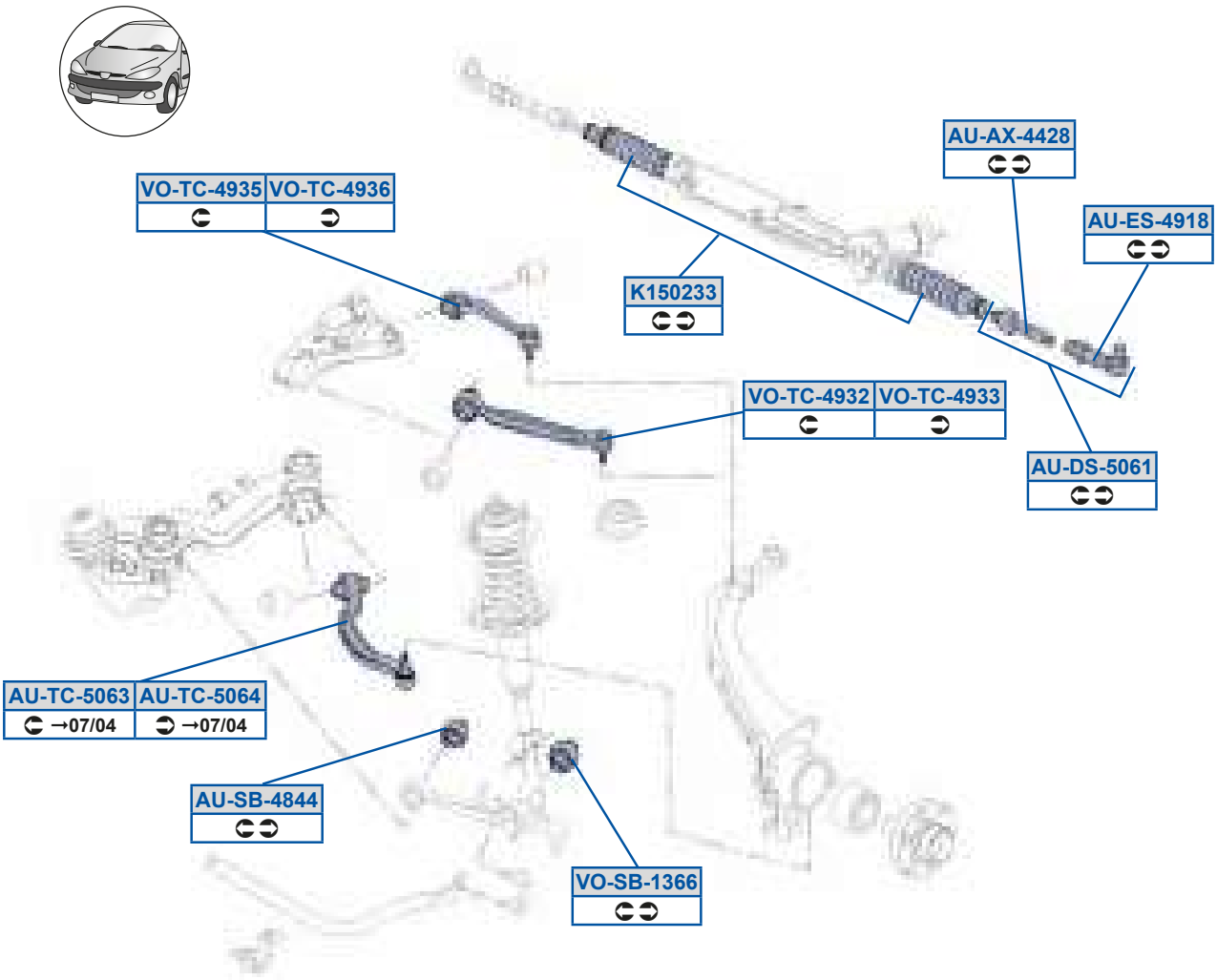
VO-TC-4935
VO-TC-4936
AU-AX-4428
AU-ES-4918
K150233
VO-TC-4932
VO-TC-4933
AU-DS-5061
AU-TC-5063
AU-TC-5064
→07/04
→07/04
AU-SB-4844
VO-SB-1366

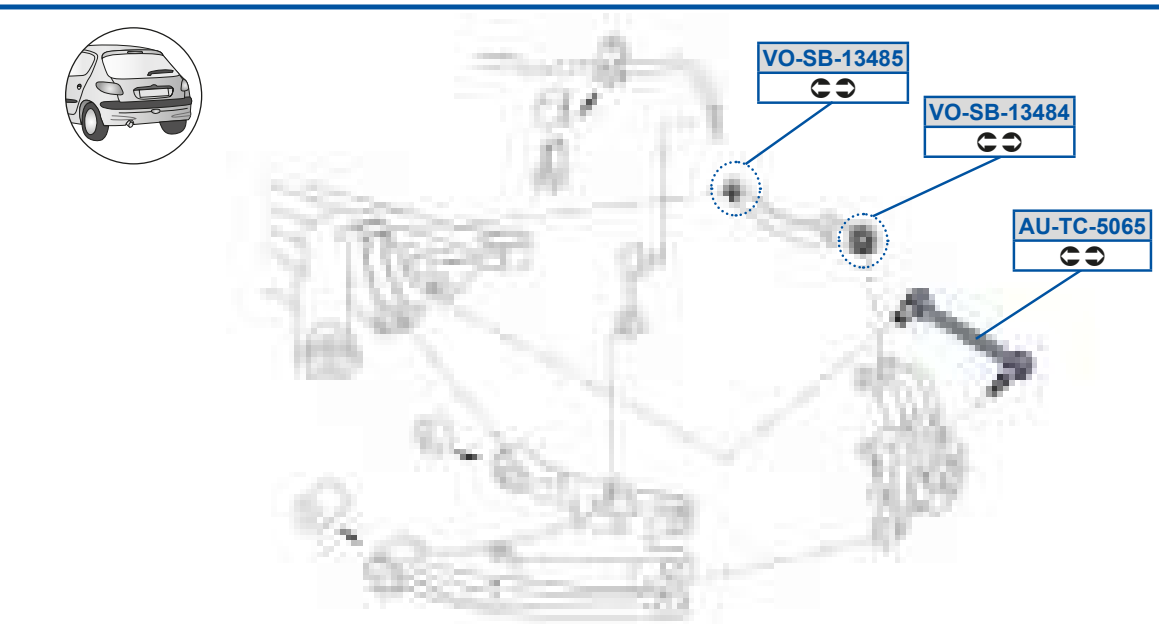
VO-SB-13485
VO-SB-13484
AU-TC-5065

Of 5Oi 5BB>F
BS7B8GF98

Of 5Rd5C8D9
BS7B8GF78Q

Of 5Sd5BG9F
BS7B8GF88P3BS7B8GF88Q

Of 5dP5BFBB
BS7B7E8F9Q

Of 5eQ5C8DA
BS7B7EDGAQ3BS7B7EDGAT

Of 5eQ5C8DB
BS7B7EDGBQ3BS7B7EDGBT

Of 5eQ5C8DC
BS7C78C9GQ3BS7C78C9GR

Y9C8>AA
BS7B8GFA8

g_ 5dP59ABFB
BS7C7C97AR

g_ 5dP59ABFC
BS7C7C97AP

g_ 5dP59ADD
BR7B7E8F8T3BR7B7E8F8V

g_ 5eQ5BGA>
BS7B7EC7CP3BS7B7EC7CS

g_ 5eQ5BGAA
BS7B7EC7DP3BS7B7EC7DS

g_ 5eQ5BGAC
BS7B7EC7GP3BS7B7EC7GS

g_ 5eQ5BGAD
BS7B7EC87P3BS7B7EC87S

a é ŒGGB5L 9GGGGIDJ 9 5DJ Tn

VO-DS-8245	VO-DS-8244
VO-DS-3535	VO-DS-3536
→02/98	→02/98

VO-AX-1282
VO-AX-8275
→02/98
VO-AX-1715
02/98→

VO-ES-8247	VO-ES-8246
→02/98	→02/98
VO-ES-0511	VO-ES-0510
02/98→	02/98→

K150081
K150083
✓ 1.0, 1.4
K150094
✗ 1.0, 1.4

VO-SB-6725
Ø18mm Outer
VO-SB-7147
Ø18mm Inner
VO-SB-8813
Ø20mm Inner

VO-SB-10052

VO-SB-1368

VO-SB-1367

VO-LS-0463
Ø18mm
VO-LS-3353
Ø20mm

VO-WP-0236	VO-WP-0235
13”	13”

VO-BJ-8249	VO-BJ-8248
13”	13”
VO-BJ-8248	VO-BJ-8249
14”	14”
✓ GTI	✓ GTI

VO-SB-10061

VO-SB-0042
Ø72mm
VO-SB-4482
Ø58m

gh

MOOG

Y9C88F9
Dd7B8GFA8

g_ 5Rd5ACAC
Dd7B99F7A3Dd7B99F7A0

g_ 5Zd58BDA
Dd7B88A8C3Dd7B88A8CQ

g_ 5dP5DE>C
8G8B88A8B

Y9C88FA
DS7B8GFA83Dd7B99FA8

g_ 5Rd5ACAD
Dd7B99F7B3Dd7B99F7B0

g_ 5Zd5AACA
Dd7B88A8C03Dd7B88A8CP

g_ 5dP5E9BE
D 7B88A8A

Y9C88GB
8V7B99FA8P3ACEB99FA80

g_ 5Rd5F>BB
Dd7B8GF7B

g_ 5dP588B>
8X7C78CB8Q

g_ 5dP5FF9A
D 7B88A8A0

g_ 5Oi 59>F>
Dd7B8GF7A /40

g_ 5Rd5F>BC
Dd7B8GF7A

g_ 5dP5988C>
8X7B899BG3Dd7B89AA8

g_ 5h a58>AC
Dd7B7E8C83Dd7B7E8C80

g_ 5Oi 59E9C
D 7B99F7A0 /40

g_ 5Sd58C98
DS7B8GF883DS7B8GF89

g_ 5dP5988D9
8E8C8AAAA38G8C89AAA

g_ 5h a58>AD
Dd7B7E8C83Dd7B7E8C80

g_ 5Oi 5F>EC
Dd7B99F7A /40

g_ 5Sd58C99
DS7B8GF883DS7B8GF89

g_ 5dP59ADE
Dd7B7E8F9

g_ 5PX5F>BF
DS7B7EADC3Dd7B7EADC0

g_ 5Sd5F>BD
Dd7B88F893Dd7B8GF89

g_ 5dP59ADF
Dd7B7E8F8

g_ 5PX5F>BG
DS7A7EADD3Dd7B7EADC

g_ 5Sd5F>BE
Dd7B88F883Dd7B8GF88

g_ 5dP5BBF>
Dd7C78CB8R

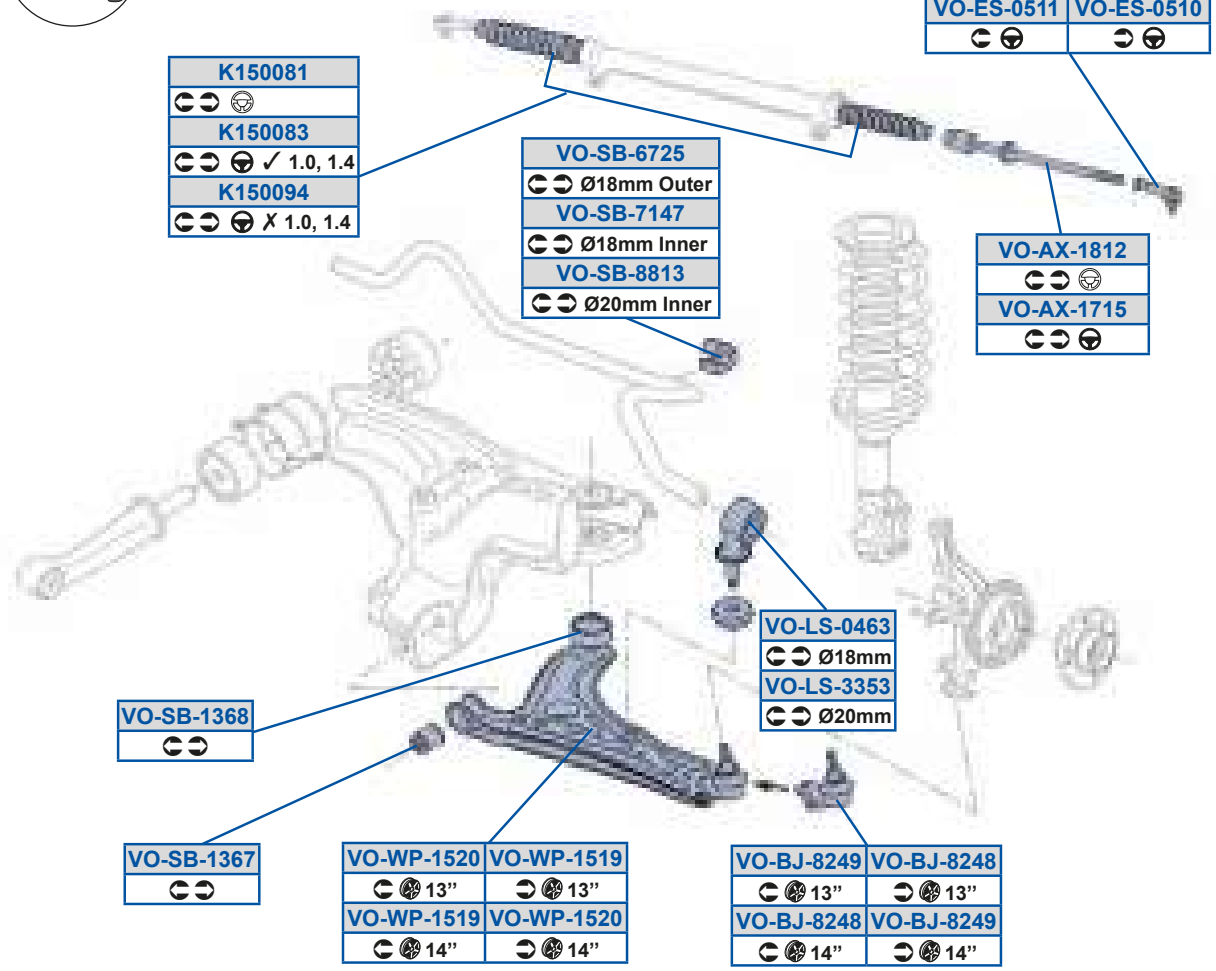
VO-ES-8247
VO-ES-8246
VO-ES-0511
VO-ES-0510
K150081
K150083
✓ 1.0, 1.4
K150094
✗ 1.0, 1.4
VO-SB-6725
Ø18mm Outer
VO-SB-7147
Ø18mm Inner
VO-SB-8813
Ø20mm Inner
VO-AX-1812
VO-AX-1715
VO-LS-0463
Ø18mm
VO-LS-3353
Ø20mm
VO-SB-1368
VO-SB-1367
VO-WP-1520
13”
VO-WP-1519
13”
VO-WP-1519
14”
VO-WP-1520
14”
VO-BJ-8249
13”
VO-BJ-8248
13”
VO-BJ-8248
14”
VO-BJ-8249
14”

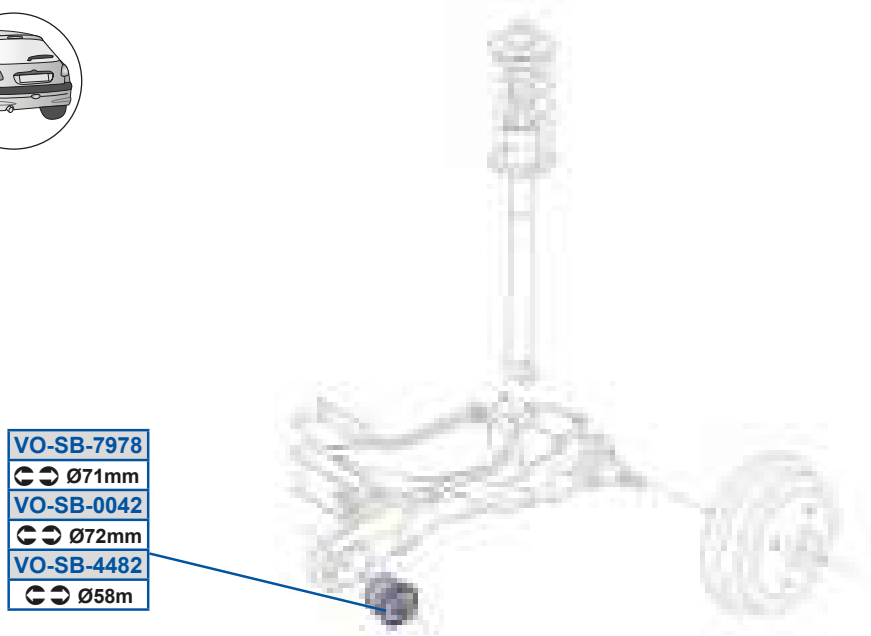
VO-SB-7978
Ø71mm
VO-SB-0042
Ø72mm
VO-SB-4482
Ø58m

Y9C88F9
Dd7B8GFA8

g_ 5Sd58C99
DS7B8GF883DS7B8GF89

g_ 5dP5BBF>
Dd7C78CB8R

Y9C88FA
DS7B8GFA83Dd7B99FA8

g_ 5Sd5F>BD
Dd7B88F893Dd7B8GF89

g_ 5dP5DE>C
8G8B88A8B

Y9C88GB
8V7B99FA8P3ACEB99FA80

g_ 5Sd5F>BE
Dd7B88F883Dd7B8GF88

g_ 5dP5E9BE
D 7B88A8A

g_ 5Oi 59E9C
D 7B99F7A0 /40

g_ 5Zd58BDA
Dd7B88A8C3Dd7B88A8CQ

g_ 5dP5EGEF
DY7C78CB803Dd7C78CB8S

g_ 5Oi 59F9>
D 7B8GF7A0 /40

g_ 5Zd5AACA
Dd7B88A8C03Dd7B88A8CP

g_ 5dP5FF9A
D 7B88A8A0

g_ 5PX5F>BF
DS7B7EADC3Dd7B7EADC0

g_ 5dP588B>
8X7C78CB8Q

g_ 5h a59C9G
Dd7B7E8C803D 7B7E8C80

g_ 5PX5F>BG
DS7A7EADD3Dd7B7EADC

g_ 5dP59ADE
Dd7B7E8F9

g_ 5h a59C>8
Dd7B7E8C803D 7B7E8C80

g_ 5Sd58C98
DS7B8GF883DS7B8GF89

g_ 5dP59ADF
Dd7B7E8F8

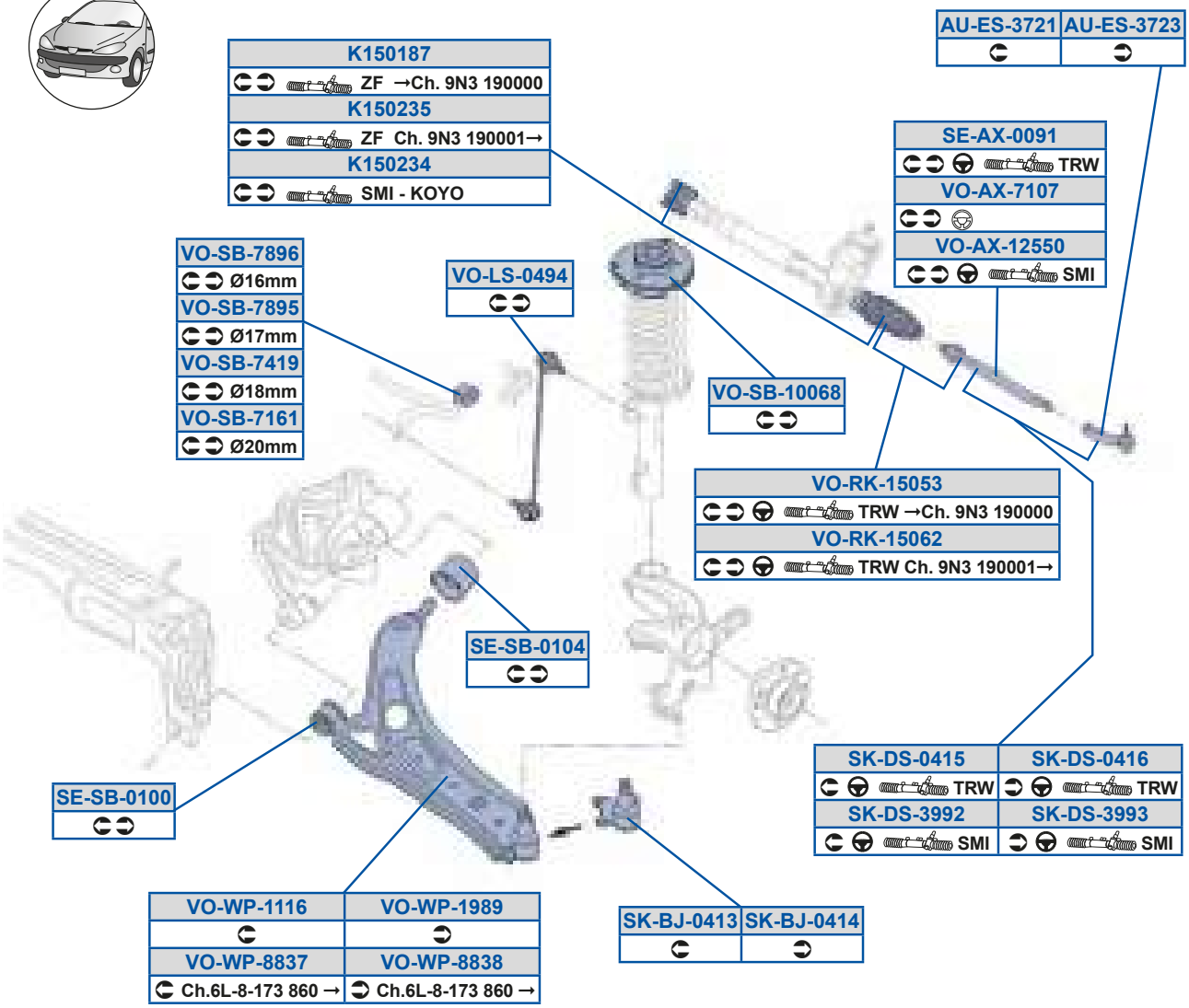
K150187
ZF →Ch. 9N3 190000
K150235
ZF Ch. 9N3 190001→
K150234
SMI - KOYO
AU-ES-3721
AU-ES-3723
SE-AX-0091
TRW
VO-AX-7107
VO-AX-12550
SMI
VO-SB-7896
Ø16mm
VO-SB-7895
Ø17mm
VO-SB-7419
Ø18mm
VO-SB-7161
Ø20mm
VO-LS-0494
VO-SB-10068
VO-RK-15053
TRW →Ch. 9N3 190000
VO-RK-15062
TRW Ch. 9N3 190001→
SE-SB-0104
SE-SB-0100
SK-DS-0415
TRW
SK-DS-0416
TRW
SK-DS-3992
SMI
SK-DS-3993
SMI
VO-WP-1116
VO-WP-1989
VO-WP-8837
Ch.6L-8-173 860 →
VO-WP-8838
Ch.6L-8-173 860 →
SK-BJ-0413
SK-BJ-0414

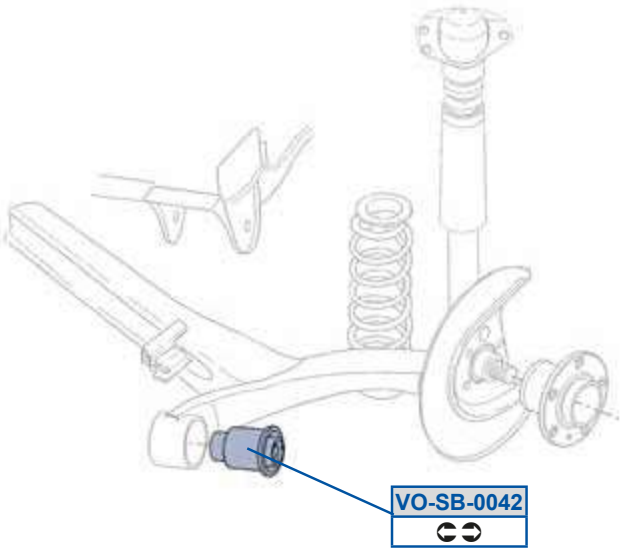
VO-SB-0042

Of 5Sd5AE>9
Cu7B99F88O3C 7B9AF88

dY5PX58B9A
C 7B7EADCP3DI 7B7EADCO

g_ 5Zd58BGB
DI 7B88A8CO3DI 7B88A8CP

g_ 5dP5EFGD
DI 7B88A8BX3DI 7B88A8BZ

Of 5Sd5AE>A
C 7B9AF893DI 7B8GF89Q

dY5PX58B9B
C 7B7EADDP3DI 7B7EADDO

g_ 5c Y59C8CA
DI 7B9AF7AP /4O3DI 7B9AF98P

g_ 5h a5999D
DI 7B7E8C8R

Y9C89FE
DS7B8GFA8

dY5Rd58B9C
DI 7B8GF7AP3DI 7B8GF7AT

g_ 5c Y59C8D>
DI 7B9AF7AP /4O3DI 7B9AF98P

g_ 5h a59GFG
DI 7B7E8C8R 2 P X

Y9C8>AB
DI 7B9AFA8O

dY5Rd58B9D
DI 7B8GF7BP3DI 7B8GF7BT

g_ 5dP588B>
8X7C78CB8Q

g_ 5h a5FFAE
Dn7B7E8C83Dn7B7E8C8S

Y9C8>AC
DI 7B9AFA8R

dY5Rd5AGG>
DI 7B9AF7AQ3DI 7B9AF7AU

g_ 5dP5988DF
Dd7B89AA8S

g_ 5h a5FFAF
Dn7B7E8C93Dn7B7E8C9S

dS5Oi 588G9
DI 7B9AF7AP /4O3DI 7B9AF98P

dY5Rd5AGGA
C 7B9AF7B3DI 7B9AF7BQ

g_ 5dP5E9D9
DI 7B88A8BT

dS5dP58988
DI 7B7E8F9O

g_ 5Oi 59>CC8
DI 7B9AF87Q

g_ 5dP5EB9G
DI 7B88A8BS3DI 7B88A8Bd

dS5dP5898B
8Y7B7E8FAS3DI 7B7E8FA

g_ 5Oi 5E98E
8G8B8GF983DY7B99F7AO /4O

g_ 5dP5EFGC
DI 7B88A8Ba 3DI 7B88A8BI

gh

a_Z_ 0Dcr1	8A78G	a_Z_ 0Dc94D0Q91	89798
a_Z_ gt 0Dc1	8979B		

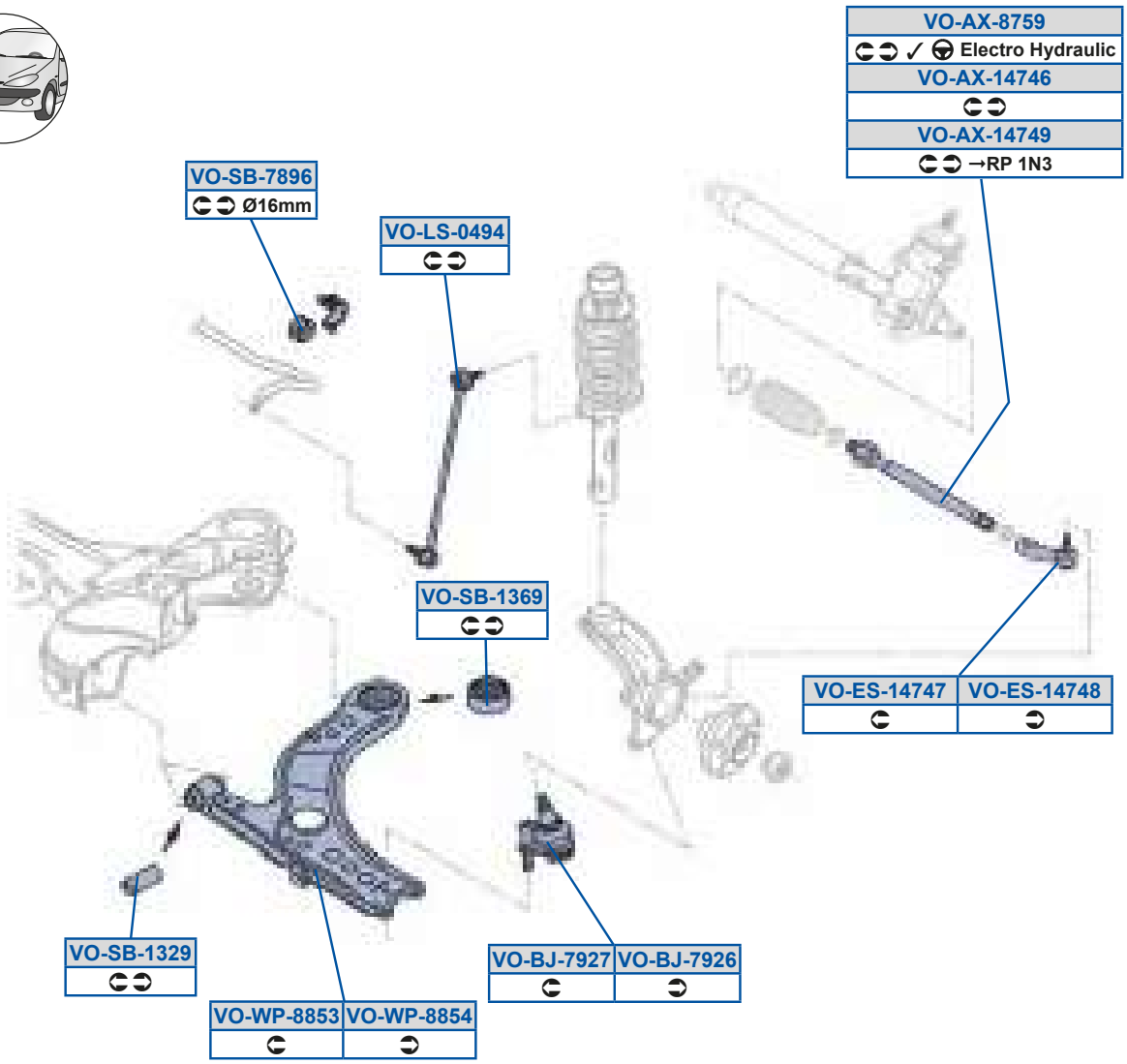

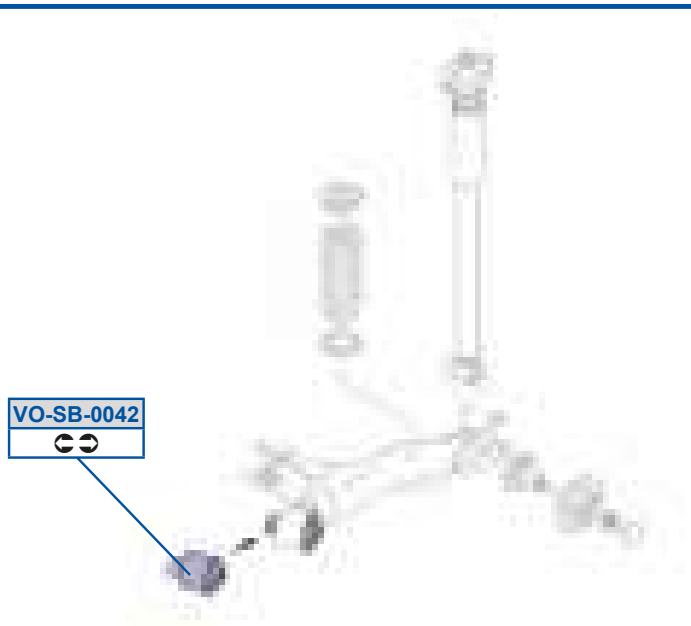

MOOG

g_ 5Oi 59BEBD
DQ7B9AF87O3DQ7B9AF87P

g_ 5dP588B>
8X7C78CB8Q

g_ 5Oi 59BEBG
DnRB9AF873DnuB9AF87

g_ 5dP59A>G
8G8B7E8F93ACEB7E8F9

g_ 5Oi 5FECG
Dn7B9AF7AQ3Dn7B9AF7AR

g_ 5dP59ADG
8X7B7E8F838X7B7E8F8O

g_ 5PX5EG>D
Cu7B7EADDO3Dn7B7EADD

g_ 5dP5EFGD
DI 7B88A8BX3DI 7B88A8BZ

g_ 5PX5EG>E
Cu7B7EADCO3Dn7B7EADC

g_ 5h a5FFCA
Dn7B7E8C8O3Dn7B7E8C8Q

g_ 5Sd59BEBE
DQ7B9AF88O

g_ 5h a5FFCB
Dn7B7E8C9O3Dn7B7E8C9Q

g_ 5Sd59BEBF
DQ7B9AF89O

g_ 5Zd58BGB
DI 7B88A8CO3DI 7B88A8CP

gh

a_Z_ QZOddWQ ODg; 1	997GC 8E78D	a_Z_ gt ét ODgC1	8B7GE 8G789

a é Qé zt 5gr zr 0GGC5L >8891IDYgn

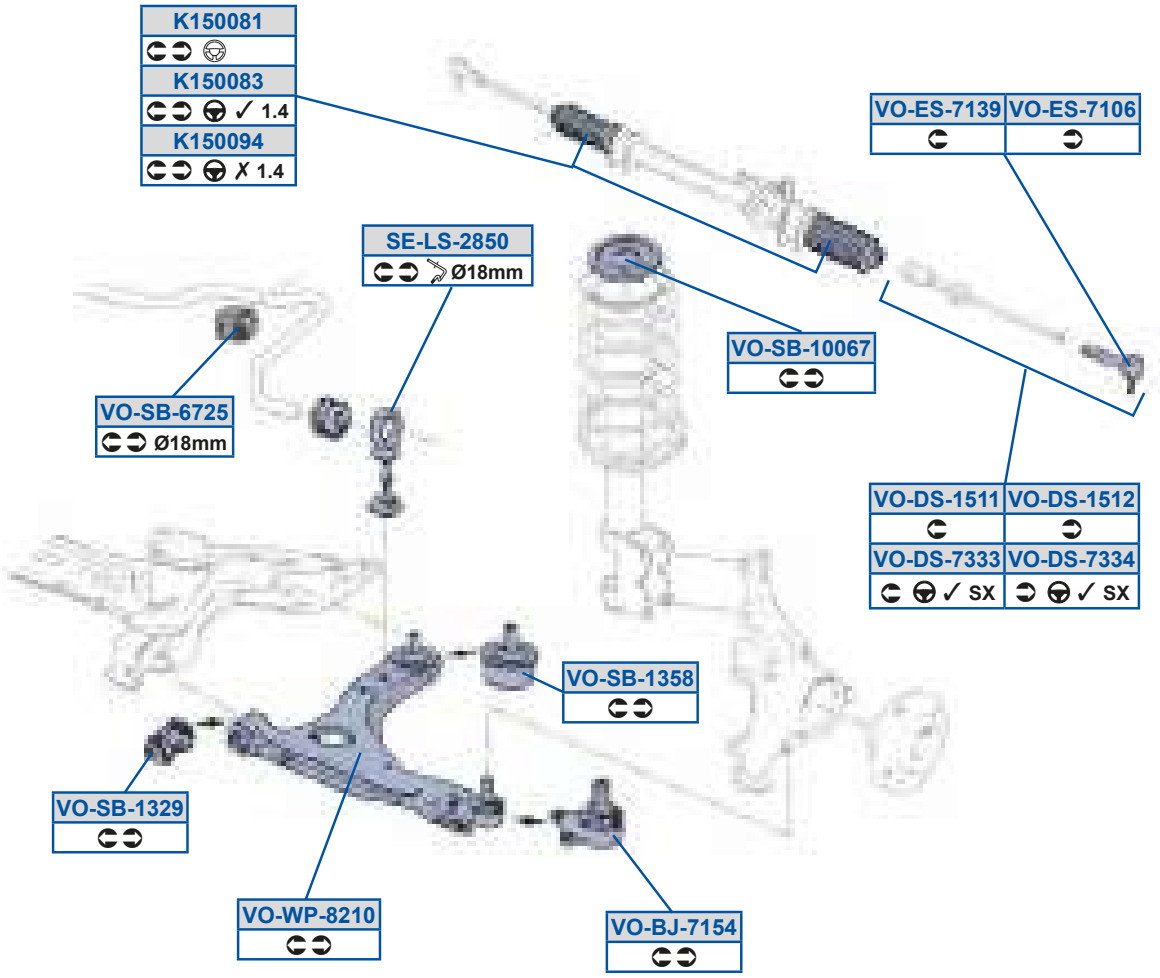

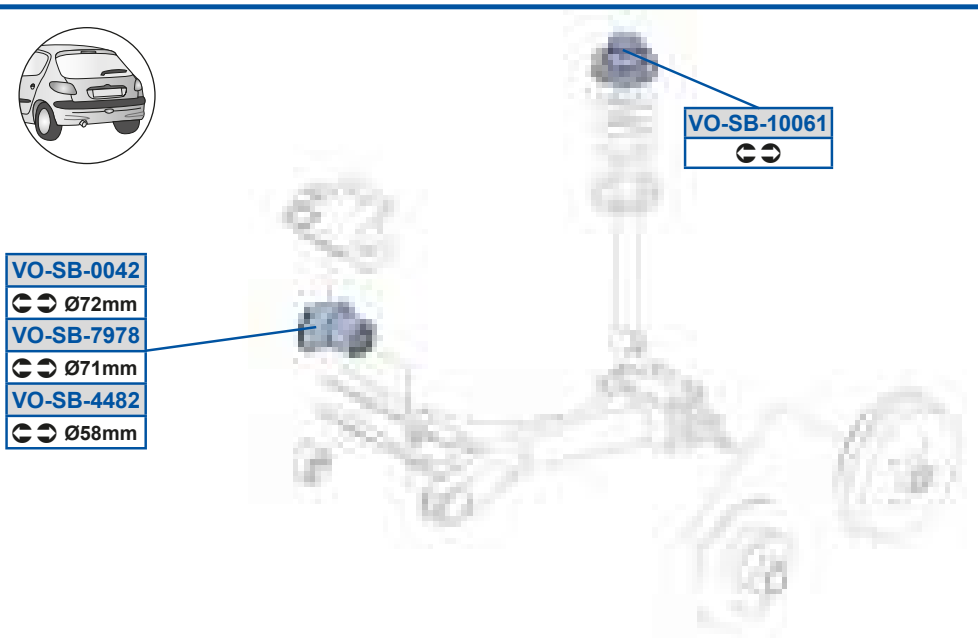

gh

MOOG

Y9C88F9
Dd7B8GFA8

g_ 5Rd5EAAB
DY7B99F7BP3DY7B99F7BS

g_ 5dP5BBF>
Dd7C78CB8R

Y9C88FA
DS7B8GFA83Dd7B99FA8

g_ 5Sd5E98D
8G8B8GF893A07B99F89

g_ 5dP5DE>C
8G8B88A8B

Y9C88GB
8V7B99FA8P3ACEB99FA80

g_ 5Sd5E9AG
8G8B8GF883A07B99F88

g_ 5dP5EGEF
DY7C78CB803Dd7C78CB8S

dS5Zd5>FC8
8G8B88A8C0

g_ 5dP588B>
8X7C78CB8Q

g_ 5h a5F>98
8G8B7E8C8P38G8B7E8CA

g_ 5PX5E9CB
ACEB7EADC3ACEB7EADC0

g_ 5dP5988D9
8E8C8AAAA38G8C89AAA

g_ 5Rd59C99
DY7B99F7A03DY7B99F7AR

g_ 5dP5988DE
8X7B899BG3ACEB899BG

g_ 5Rd59C9>
DY7B99F7AR3DY7B99F7B0

g_ 5dP59A>G
8G8B7E8F93ACEB7E8F9

g_ 5Rd5EAAA
DY7B99F7AP3DY7B99F7AS

g_ 5dP59ACF
8G8B7E8F838G8B7E8F80

dQW_QQ_ 09AE1	8C78F	dQW_QQ_ 09AE49AF1	8E79C

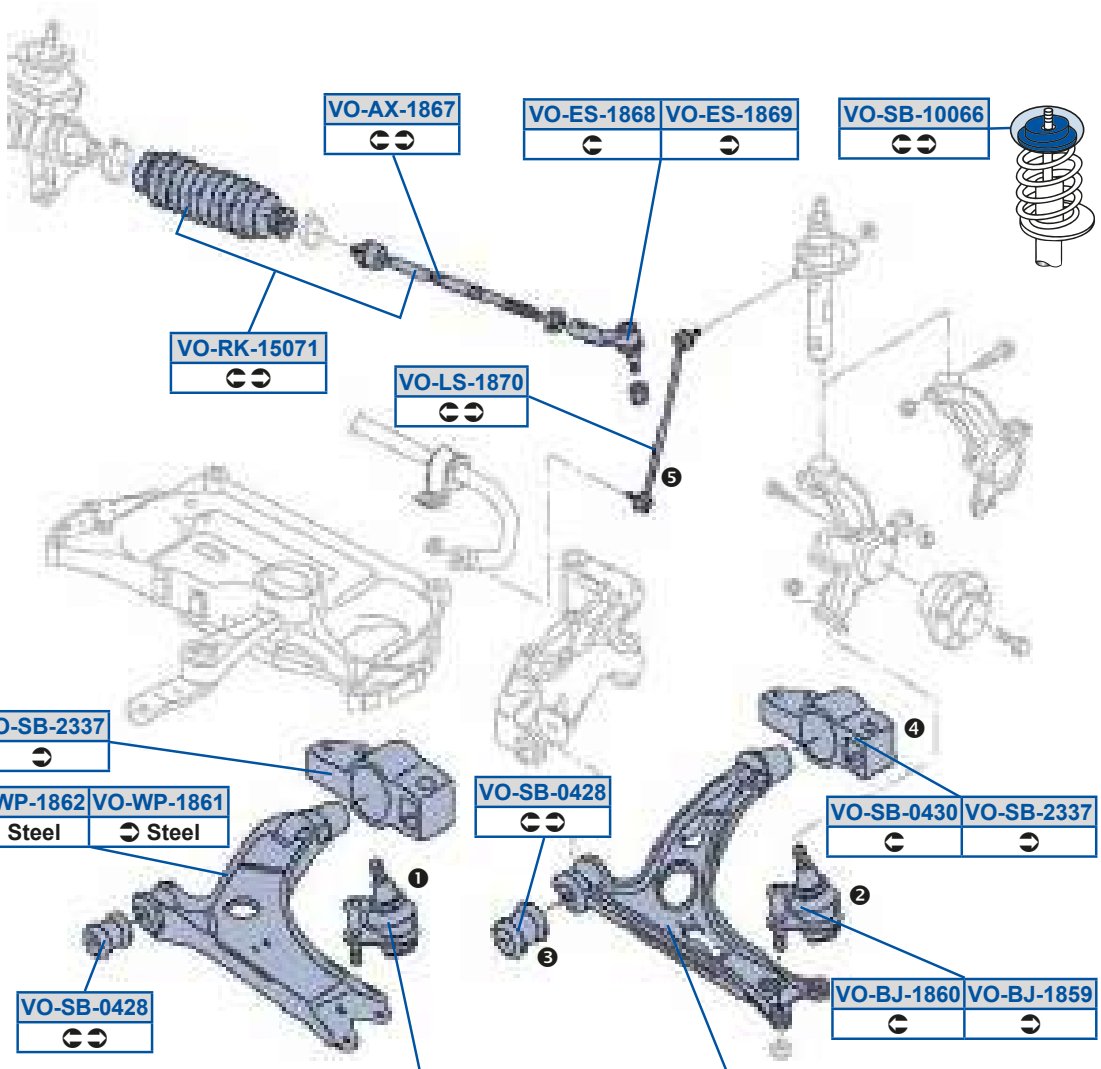

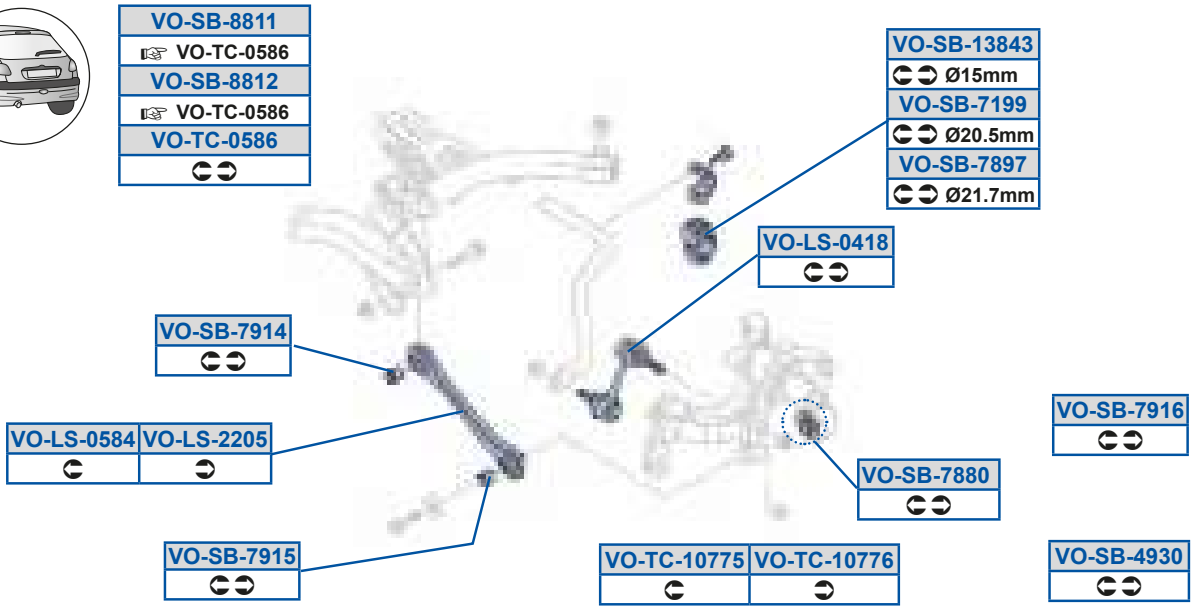

g_ 5Oi 59FDE
8Y7B9AF87O

g_ 5PX59FCG
8Y7B7EADDP38Y7B7EADDQ

g_ 5PX59FD8
8Y7B7EADCP38Y7B7EADCQ

g_ 5Sd59FDF
8Y7B9AF88O38Y7B9AF88P

g_ 5Sd59FDG
8Y7B9AF89O38Y7B9AF89P

g_ 5Zd58B9F
8Y7C7CBDC0O38Y7C7CBDCQ

g_ 5Zd58CFB
8Y7C78C9GS38Y7C78C9GT

g_ 5Zd59FE8
8Y7B88A8CP38Y7B88A8CX

g_ 5Zd5>>8C
8Y7C78CA7P38Y7C78CA7Q

g_ 5c Y59C8E9
8Y7B9AF87O

g_ 5c Y5DD8D

g_ 5dP58B>F
8Y7B7E8F938Y7B7E8F9O

g_ 5dP58BA8
8Y78GG9A8U38Y78GG9A8X

g_ 5dP5988DD
8Y7B899BGP3Dd7B899BGQ

g_ 5dP59AFBA
8Y7C88A9EPO

g_ 5dP5>AAE
8Y78GG9A9U38Y78GG9A9X

g_ 5dP5BGA8
8Y7C7CCB8Q38Y7C7CCB8R

g_ 5dP5E9GG
8Y7C88A9EOn

g_ 5dP5EFF8
8Y7C7CCCA38Y7C7CCCAO

g_ 5dP5EFGE
8Y7C88A9EOo

g_ 5dP5EG9B
8Y7C78CB8Q

g_ 5dP5EG9C
8Y7C7CCBAO

g_ 5dP5EG9D
8Y7C7C8E8Q38Y7C7C8EAQ

g_ 5dP5FF99
8Y7C7C9EGO

g_ 5dP5FF9>
8Y7C7C97AO

g_ 5eQ58CFD
8Y7C7CA9AV38Y7C7CA9Ad

g_ 5eQ598EEC
8Y7C7C99AS38Y7C7C99AV

g_ 5eQ598EED
8Y7C7C99BS38Y7C7C99BV

g_ 5h a59FD9
8Y7B7E8C90O38Y7B7E8C90S

g_ 5h a59FD>
8Y7B7E8C80O38Y7B7E8C80S

g_ 5h a59FDB
8Y7B7E8C90Q38Y7B7E8C9a

g_ 5h a59FDC
8Y7B7E8C80Q38Y7B7E8C8a

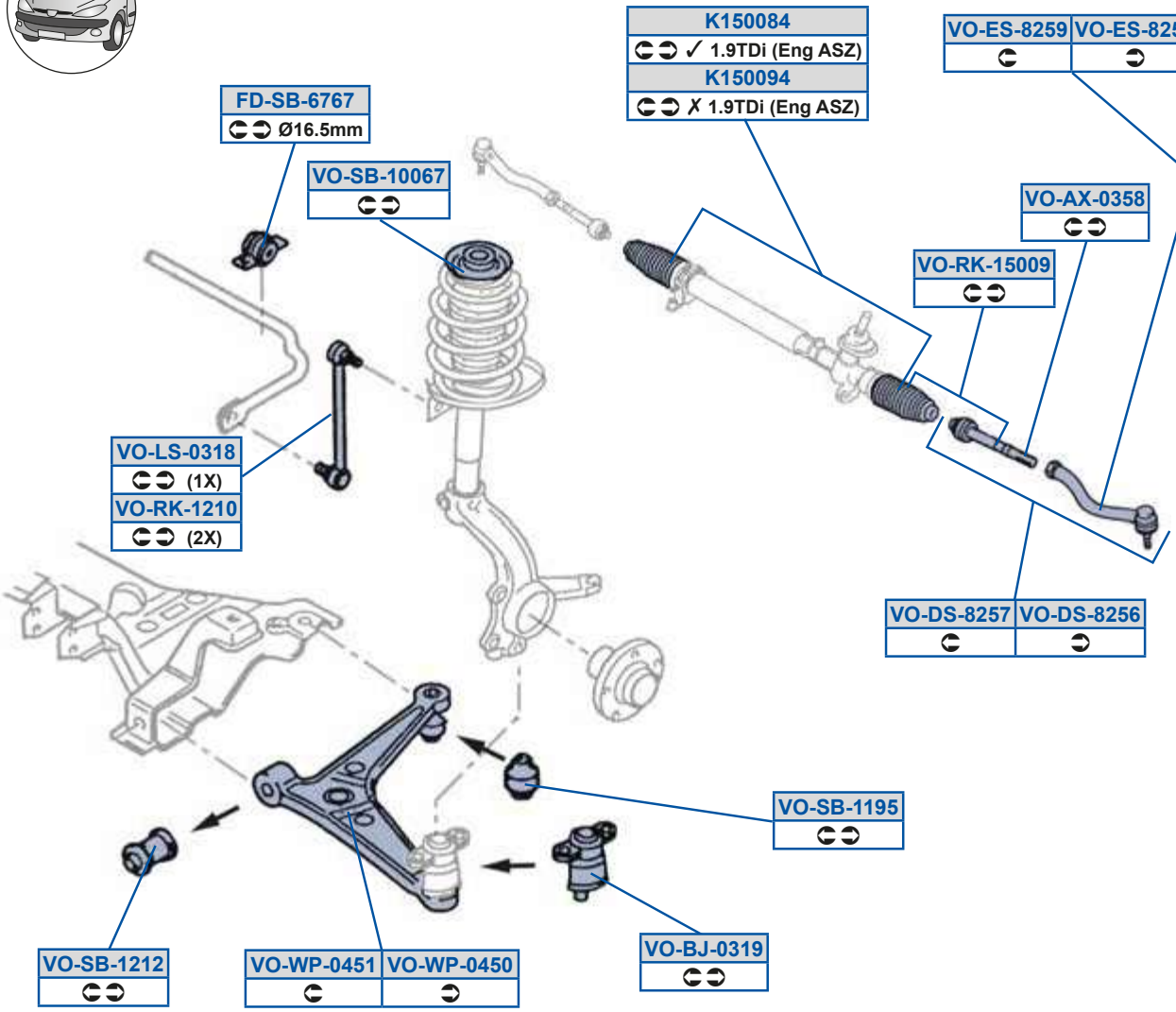
K150084
✓ 1.9TDi (Eng ASZ)
K150094
✗ 1.9TDi (Eng ASZ)
VO-ES-8259
VO-ES-8258
FD-SB-6767
Ø16.5mm
VO-SB-10067
VO-AX-0358
VO-RK-15009
VO-LS-0318
(1X)
VO-RK-1210
(2X)
VO-DS-8257
VO-DS-8256
VO-SB-1195
VO-SB-1212
VO-WP-0451
VO-WP-0450
VO-BJ-0319

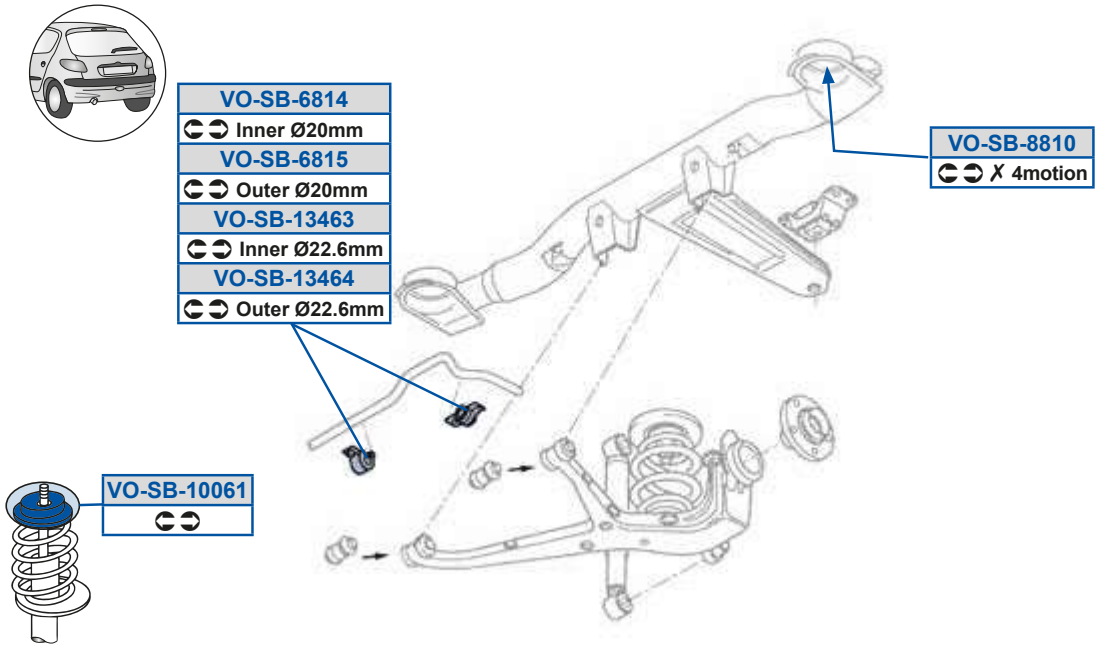
VO-SB-6814
Inner Ø20mm
VO-SB-6815
Outer Ø20mm
VO-SB-13463
Inner Ø22.6mm
VO-SB-13464
Outer Ø22.6mm
VO-SB-8810
✗ 4motion
VO-SB-10061

TR5dP5DEDE
Ea 7B887A8

g_ 5Sd5F>CG
Ea 7B99F8E3Ea 7B99F8E0

g_ 5dP59ABDA
Ea 7C88B8AP

Y9C88FB
Ea 7B99FA8P3Ea AB99FA8

g_ 5Zd58A9F
Ea 7A88A8E3Ea 7B88A8EP

g_ 5dP59ABDB
Ea 7C88B8BQ

Y9C88GB
8V7B99FA8P3ACEB99FA80

g_ 5cY59>98
Ea ABGFA8E

g_ 5dP5DF9B
Ea 7C88B8A0

g_ 5Oi 58ACF
Ea 7B99F98T3Ea AB99F7A

g_ 5cY59C88G
Ea 7B99F98T3Ea AB99F7A

g_ 5dP5DF9C
877GDBG

g_ 5PX58A9G
E977GBD3Ea 7B7EADC0

g_ 5dP5988D9
8E8C8AAAA38G8C89AAA

g_ 5dP5FF98
Ea 7C7C999P

g_ 5Rd5F>CD
Ea 7B99F7BT3Ea 7B99F7BU

g_ 5dP5988DE
8X7B899BG3ACEB899BG

g_ 5h a58BC8
Ea 7B7E8C9P

g_ 5Rd5F>CE
Ea 7B99F7AT3Ea 7B99F7AU

g_ 5dP599GC
Ea 7B7E8F83Ea 7B7E8F80

g_ 5h a58BC9
Ea 7B7E8C8P

g_ 5Sd5F>CF
Ea 7B99F8F3Ea 7B99F8F0

g_ 5dP59>9>
Ea 7B7E8F803Ea 7C78CB8

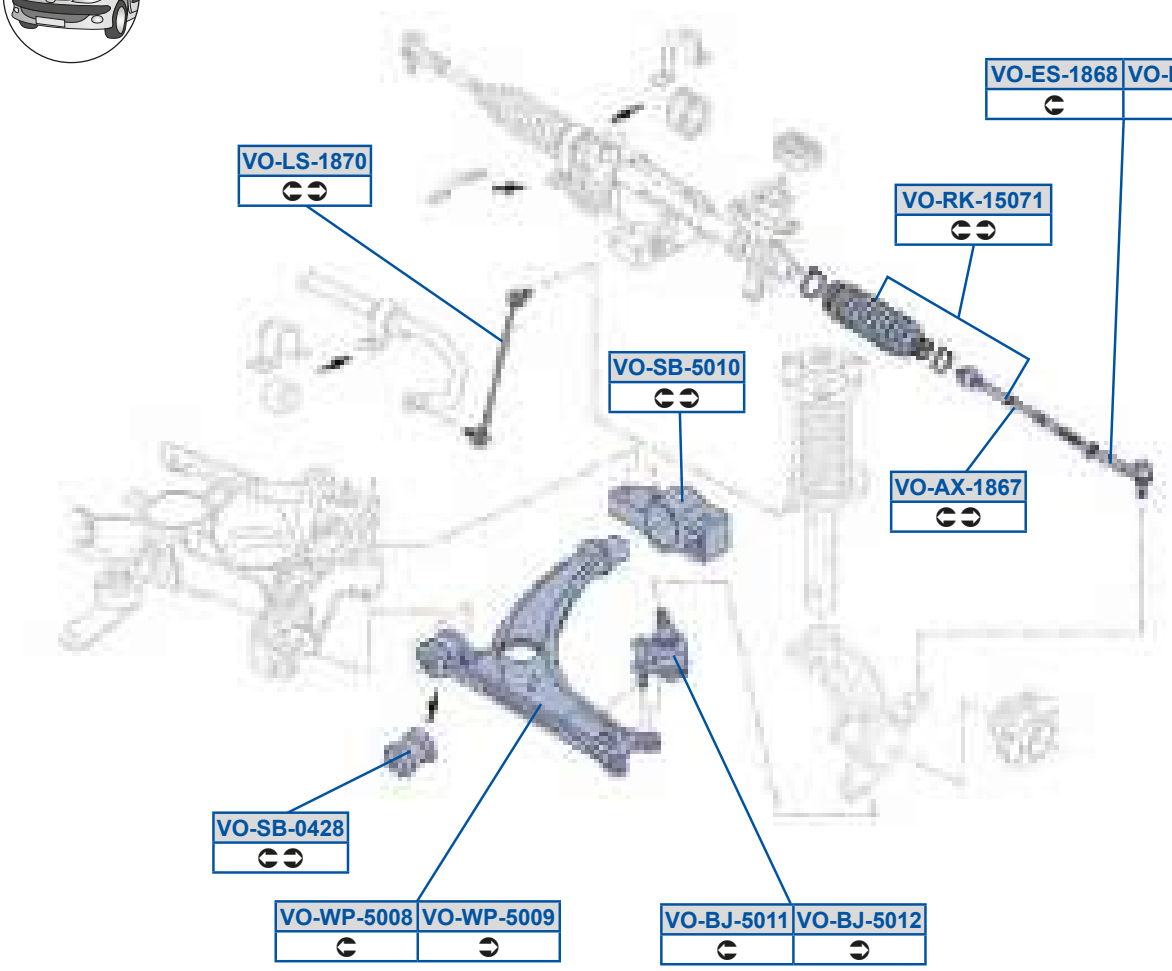
VO-ES-1868
VO-ES-1869
VO-LS-1870
VO-RK-15071
VO-SB-5010
VO-AX-1867
VO-SB-0428
VO-WP-5008
VO-WP-5009
VO-BJ-5011
VO-BJ-5012

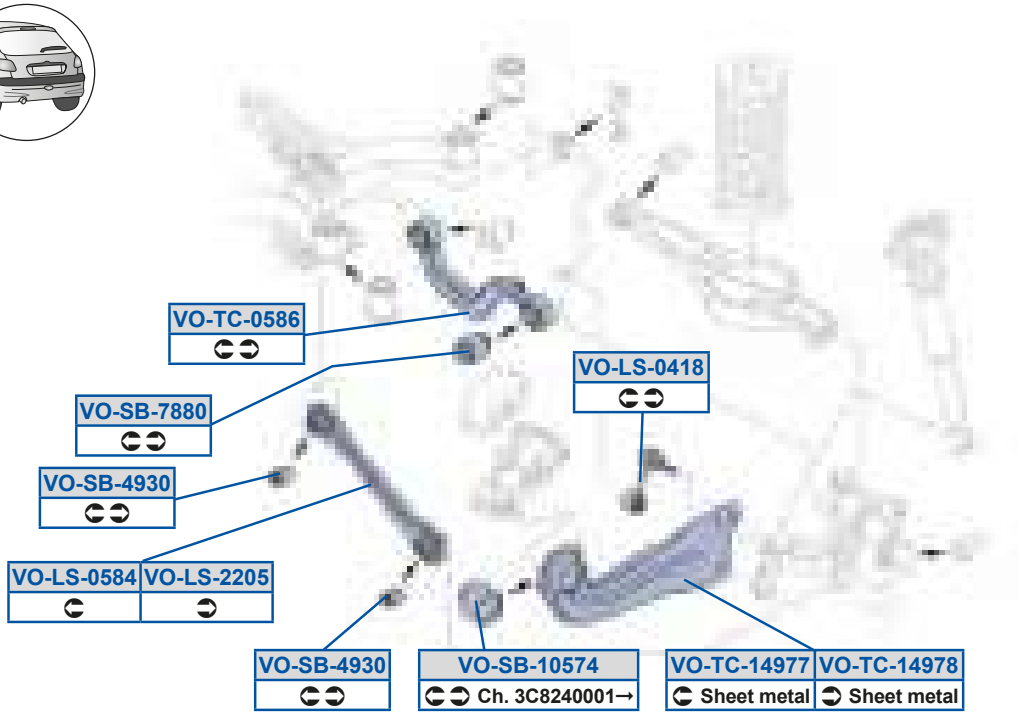
VO-TC-0586
VO-SB-7880
VO-LS-0418
VO-SB-4930
VO-LS-0584
VO-LS-2205
VO-SB-4930
VO-SB-10574
Ch. 3C8240001→
VO-TC-14977
Sheet metal
VO-TC-14978
Sheet metal

g_ 5Oi 59FDE
8Y7B9AF87O

g_ 5Zd5>>8C
8Y7C78CA7P38Y7C78CA7Q

g_ 5h a5C88F
AQ7B7E8C8O3AQ7B7E8C8P

g_ 5PX5C899
AQ7B7EADCO3AQ7B7EADCP

g_ 5c Y59C8E9
8Y7B9AF87O

g_ 5h a5C88G
AQ7B7E8C8O3AQ7B7E8C8P

g_ 5PX5C89>
AQ7B7EADDO3AQ7B7EADDP

g_ 5dP58B>F
8Y7B7E8F938Y7B7E8F9O

g_ 5Sd59FDF
8Y7B9AF88O38Y7B9AF88P

g_ 5dP598CEB
AQ7C7CCB8

g_ 5Sd59FDG
8Y7B9AF89O38Y7B9AF89P

g_ 5dP5BGA8
8Y7C7CCB8Q38Y7C7CCB8R

g_ 5Zd58B9F
8Y7C7CBDCO038Y7C7CBDCQ

g_ 5dP5C898
AQ78GG9A8O3AQ78GG9A8P

g_ 5Zd58CFB
8Y7C78C9GS38Y7C78C9GT

g_ 5dP5EFF8
8Y7C7CCCA38Y7C7CCCAO

g_ 5Zd59FE8
8Y7B88A8CP38Y7B88A8CX

g_ 5eQ58CFD
8Y7C7CA9AV38Y7C7CA9Ad

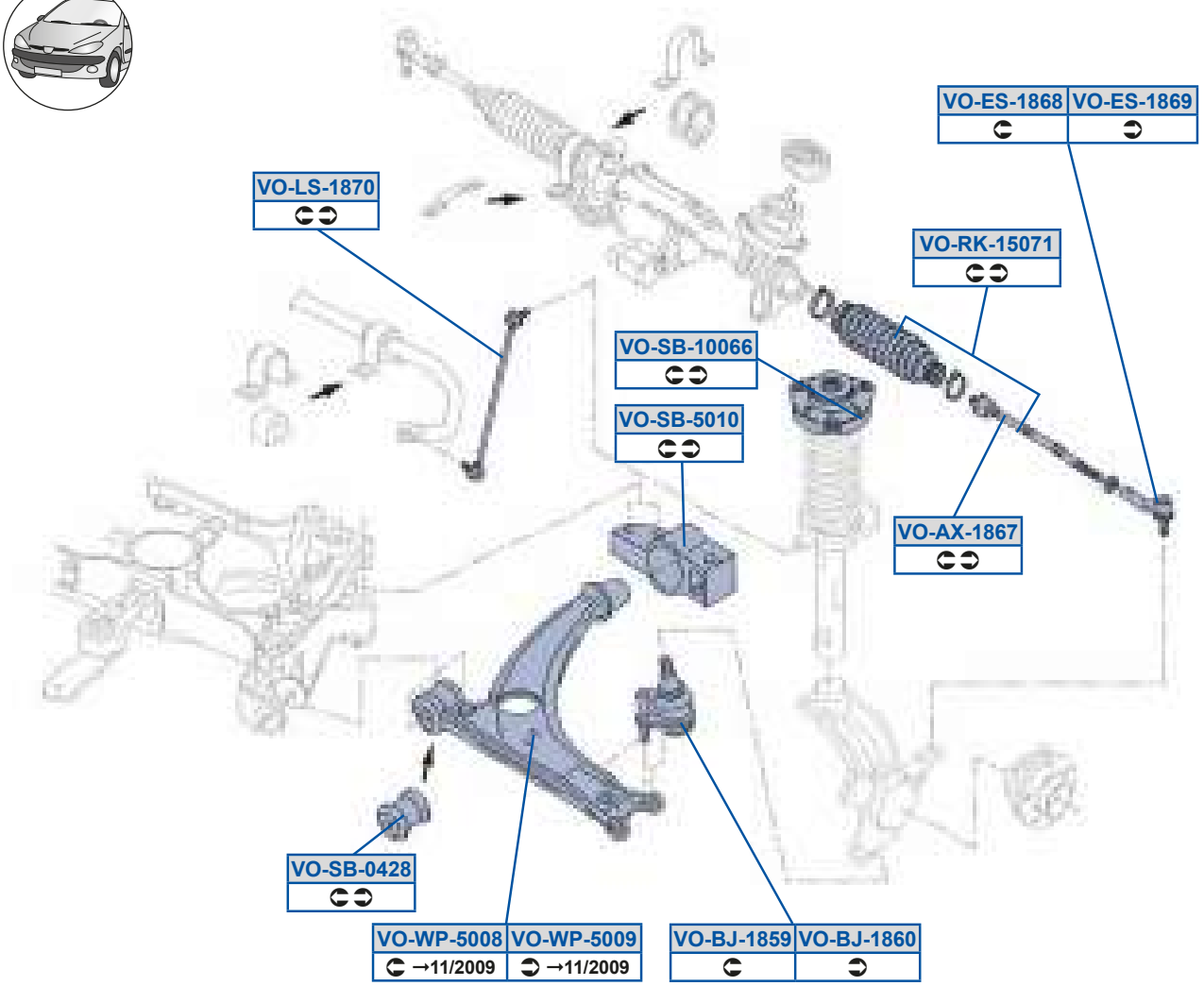

✗ 4 MOTION

✓ 4 MOTION

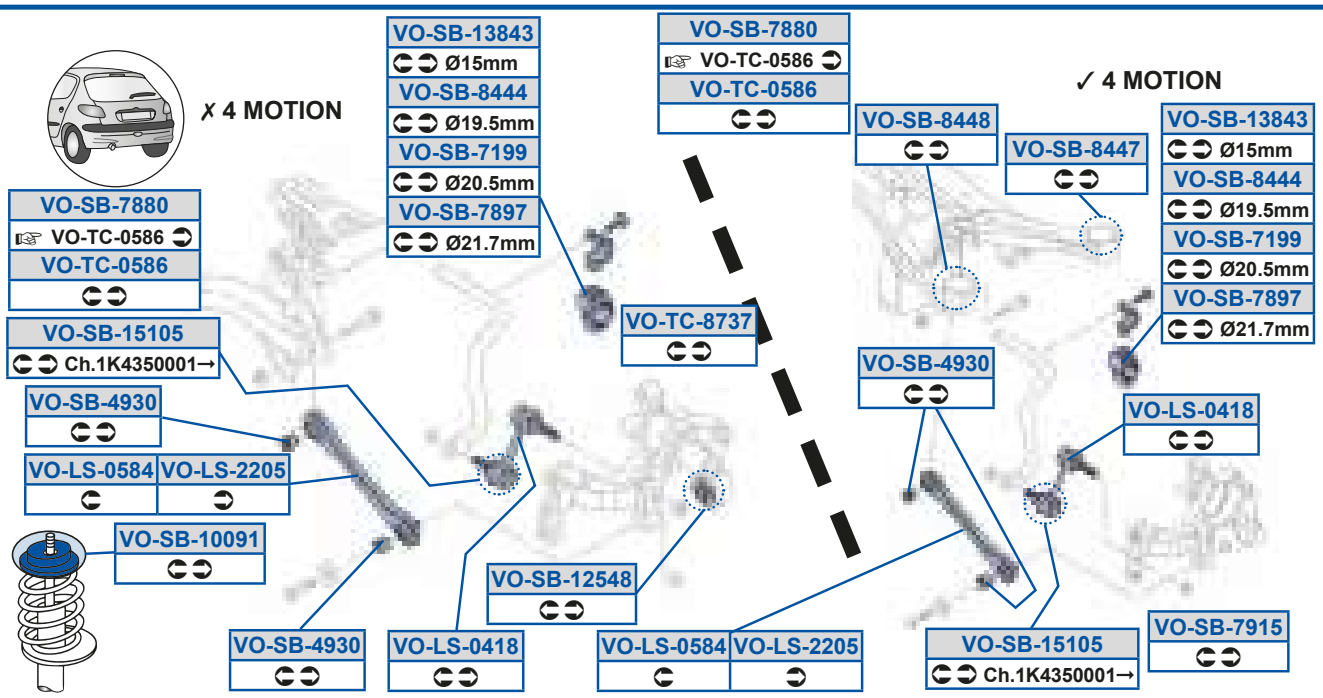

g_ 5Oi 59FDE
8Y7B9AF87O

g_ 5Zd5>>8C
8Y7C78CA7P38Y7C78CA7Q

g_ 5dP5BGA8
8Y7C7CCB8Q38Y7C7CCB8R

g_ 5dP5FBBF
8Y7C7C8BCT38Y7C7C8BCV

g_ 5PX59FCG
8Y7B7EADDP38Y7B7EADDQ

g_ 5cY59C8E9
8Y7B9AF87O

g_ 5dP5C898
AQ78GG9A8O3AQ78GG9A8P

g_ 5eQ58CFD
8Y7C7CA9AV38Y7C7CA9Ad

g_ 5PX59FD8
8Y7B7EADCP38Y7B7EADCQ

g_ 5dP58B>F
8Y7B7E8F938Y7B7E8F9O

g_ 5dP5E9GG
8Y7C88A9EOn

g_ 5eQ5FEAE
8Y7C7CA88O38Y7C7CA88OP

g_ 5Sd59FDF
8Y7B9AF88O38Y7B9AF88P

g_ 5dP5988DD
8Y7B899BGP3Dd7B899BGQ

g_ 5dP5EFF8
8Y7C7CCCA38Y7C7CCCAO

g_ 5h a5C88F
AQ7B7E8C8O3AQ7B7E8C8P

g_ 5Sd59FDG
8Y7B9AF89O38Y7B9AF89P

g_ 5dP5988G9
8Y7C8AACAX38Y7C8AACAn

g_ 5dP5EFGE
8Y7C88A9EOo

g_ 5h a5C88G
AQ7B7E8C8O3AQ7B7E8C8P

g_ 5Zd58B9F
8Y7C7CBDCO038Y7C7CBDCQ

g_ 5dP59>CBF
8Y7C7CCCA38Y7C7CCCAO

g_ 5dP5EG9C
8Y7C7CCBAO

g_ 5Zd58CFB
8Y7C78C9GS38Y7C78C9GT

g_ 5dP59AFBA
8Y7C88A9EPO

g_ 5dP5FBBB
8Y7C88A9EOl

g_ 5Zd59FE8
8Y7B88A8CP38Y7B88A8CX

g_ 5dP59C98C
8Y7C7CBDCQ /40

g_ 5dP5FBBE
8Y7C7C8BCS38Y7C7C8BCU

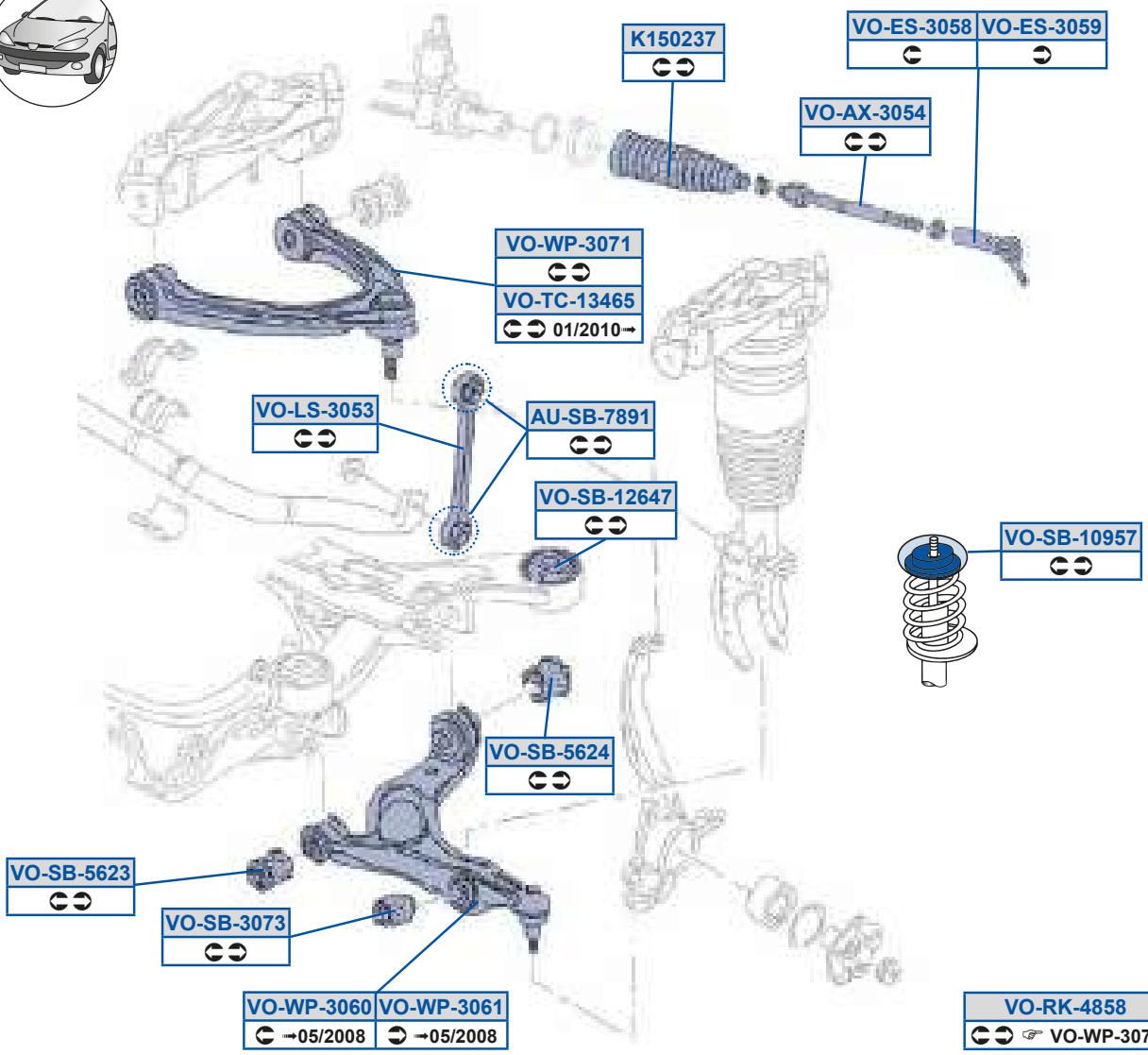
K150237
VO-ES-3058
VO-ES-3059
VO-AX-3054
VO-WP-3071
VO-TC-13465
01/2010→
VO-LS-3053
AU-SB-7891
VO-SB-12647
VO-SB-10957
VO-SB-5624
VO-SB-5623
VO-SB-3073
VO-WP-3060
→05/2008
VO-WP-3061
→05/2008
VO-RK-4858
VO-WP-3071

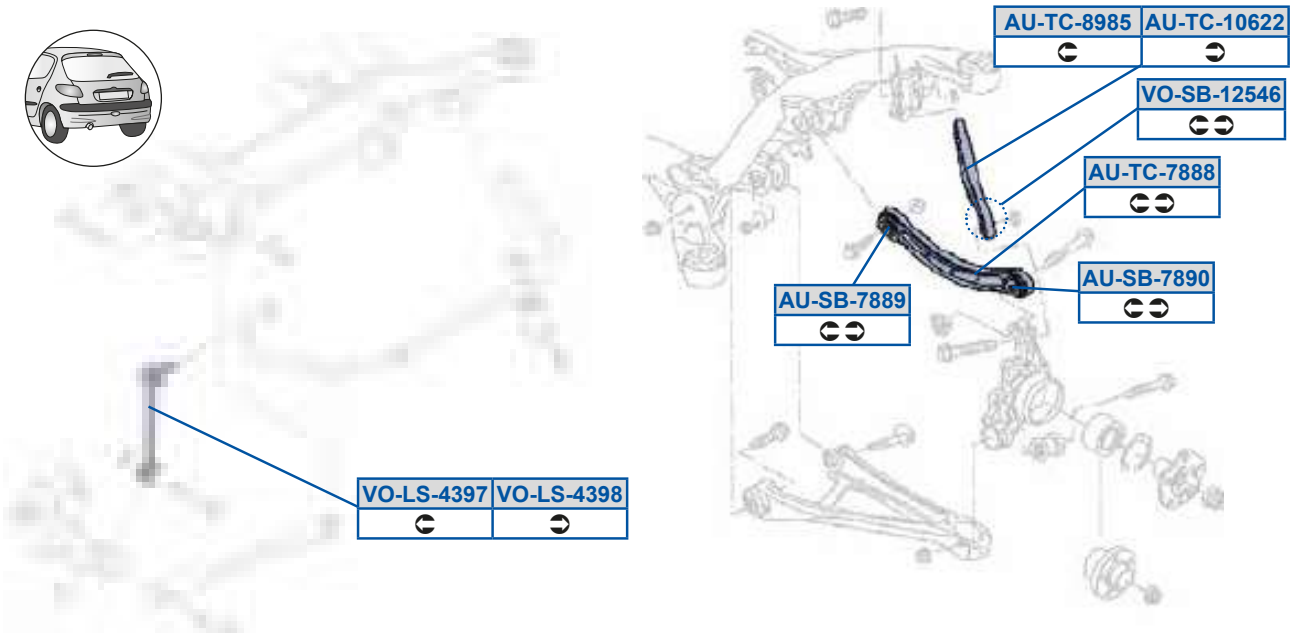
AU-TC-8985
AU-TC-10622
VO-SB-12546
AU-TC-7888
AU-SB-7890
AU-SB-7889
VO-LS-4397
VO-LS-4398

MOOG

Of 5dP5EFFG
EZ7C7CA9A0 /40

Of 5dP5EFG8
EZ7C7CA9A0 /40

Of 5dP5EFG9
EZ7B88A8E /40

Of 5eQ598D>>
EZ7C7CAGF

Of 5eQ5EFFF
EZ7C7CA9A0

Of 5eQ5FGFC
EZ7C7CAGE

Y9C8>AE
EZ7B99FA80

g_ 5Oi 5A8CB
EZ7B99F7AP /40BEZ7B99F98

g_ 5Sd5A8CF
9V7B99F8E3EZ7B99F8EP

g_ 5Sd5A8CG
9V7B99F8F3EZ7B99F8FP

g_ 5Zd5A8CA
EZ7B88A8E

g_ 5Zd5BAGE
EZ7C7CBDC03EZ7C7CBDCP

g_ 5Zd5BAGF
EZ7C7CBDD03EZ7C7CBDDP

g_ 5c Y5BFCF
EZ7B7E7EE

g_ 5dP598GCE

g_ 5dP59>CBD
EZ7C7CAGE /40

g_ 5dP59>DBE
EZ7B7E8F9T3EZ7B7E8F9U

g_ 5dP5A8EA
EZ7B89AAA0

g_ 5dP5CD>A
EZ7B7E8FA0

g_ 5dP5CD>B
EZ7B7E8F9Q3EZ7B7E8F9S

g_ 5eQ59ABDC
Ei 7B7E798

g_ 5h a5A8D8
EZ7B7E8C8Q3EZ7B7E8C8S

g_ 5h a5A8D9
EZ7B7E8C9Q3EZ7B7E8C9S

g_ 5h a5A8E9
EZ7B7E7983EZ7B7E7980

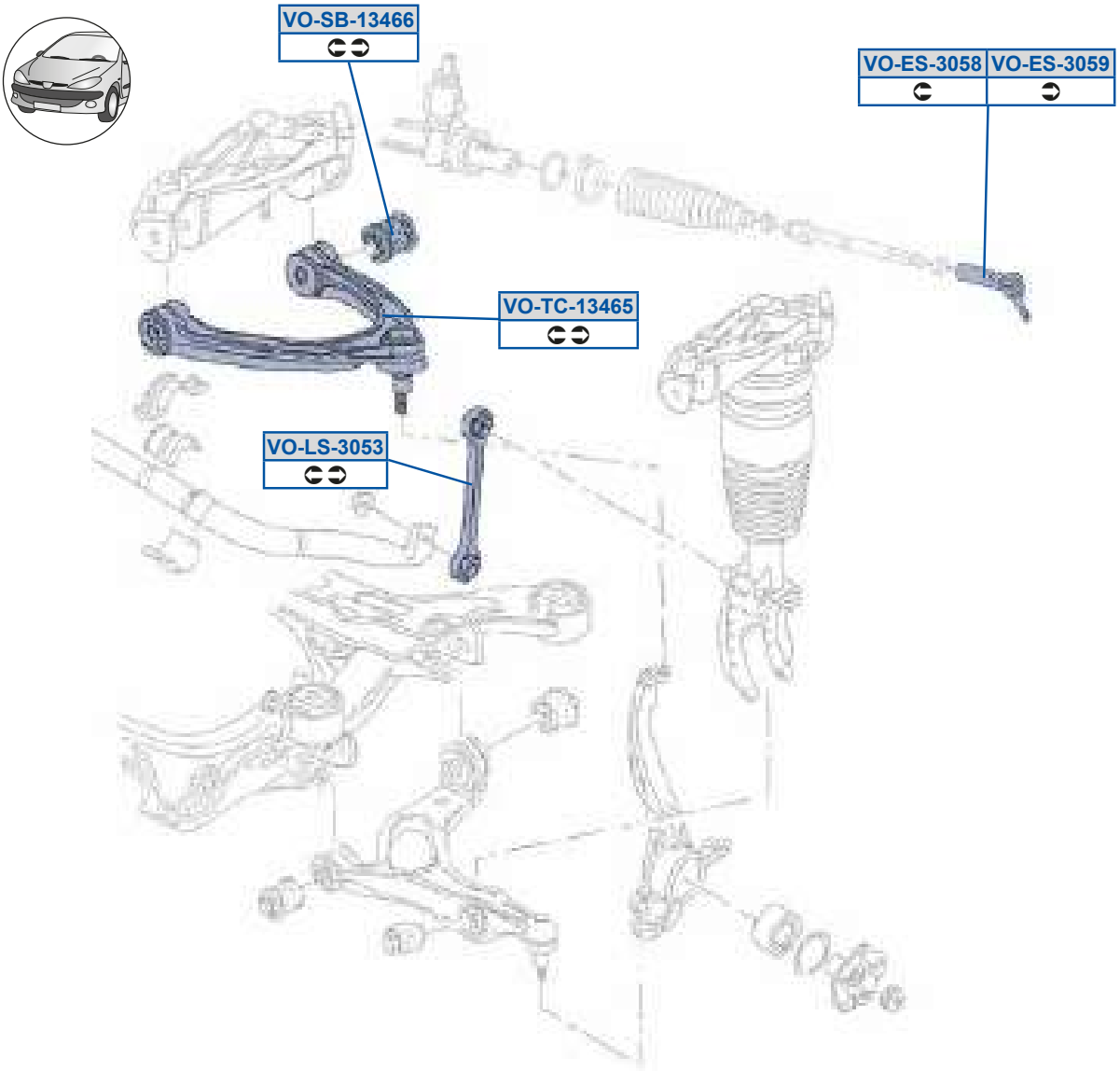
VO-SB-13466
VO-ES-3058
VO-ES-3059
VO-TC-13465
VO-LS-3053

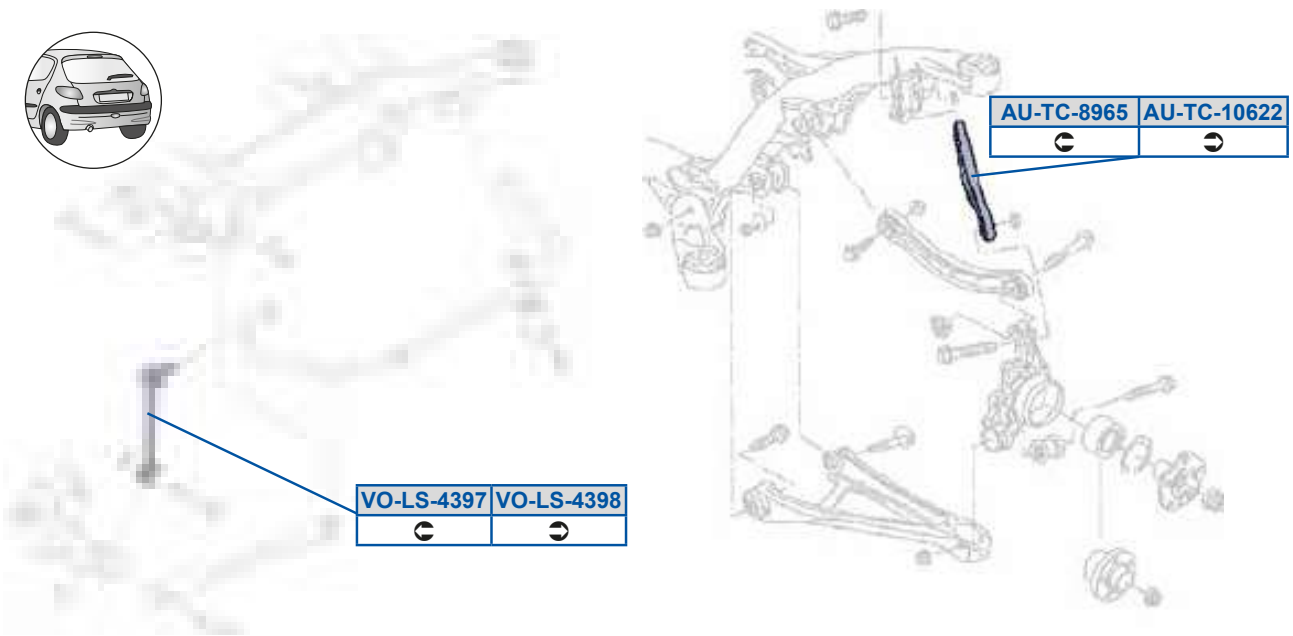
AU-TC-8965
AU-TC-10622
VO-LS-4397
VO-LS-4398

Of 5eQ598D>>
EZ7C7CAGF

Of 5eQ5FGFC
EZ7C7CAGE

g_ 5Sd5A8CF
9V7B99F8E3EZ7B99F8EP

g_ 5Sd5A8CG
9V7B99F8F3EZ7B99F8FP

g_ 5Zd5A8CA
EZ7B88A8E

g_ 5Zd5BAGE
EZ7C7CBDC03EZ7C7CBDCP

g_ 5Zd5BAGF
EZ7C7CBDD03EZ7C7CBDDP

g_ 5dP59ABDD
Ei 7B7E7EE

g_ 5eQ59ABDC
Ei 7B7E798

gh

e_f c0] 09e949e; 1	8; 78A 8C798	e_f c0] 09eA1	8C798 8C79C

e r 03>7>88A 5L 8C7>89C119epn

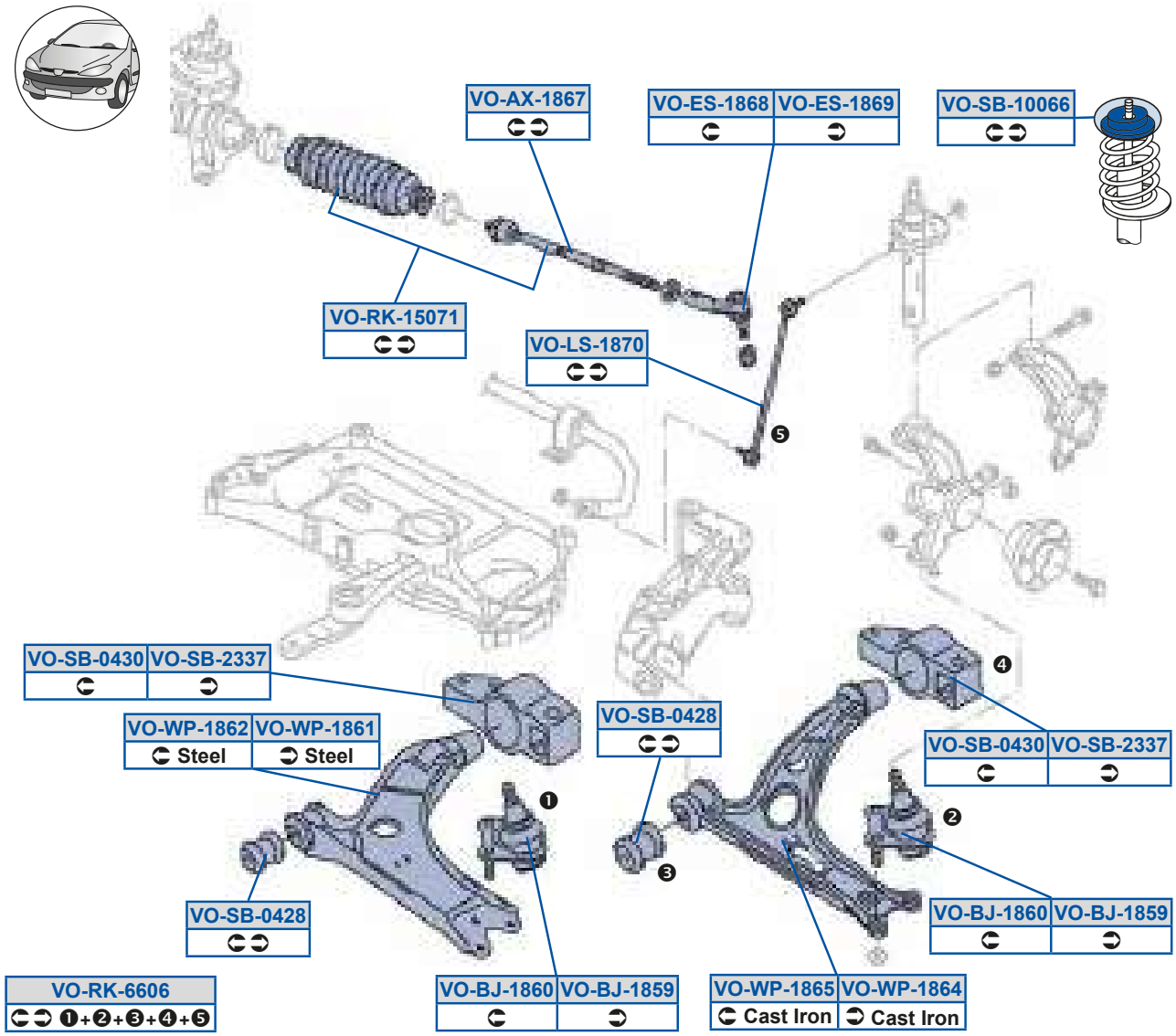

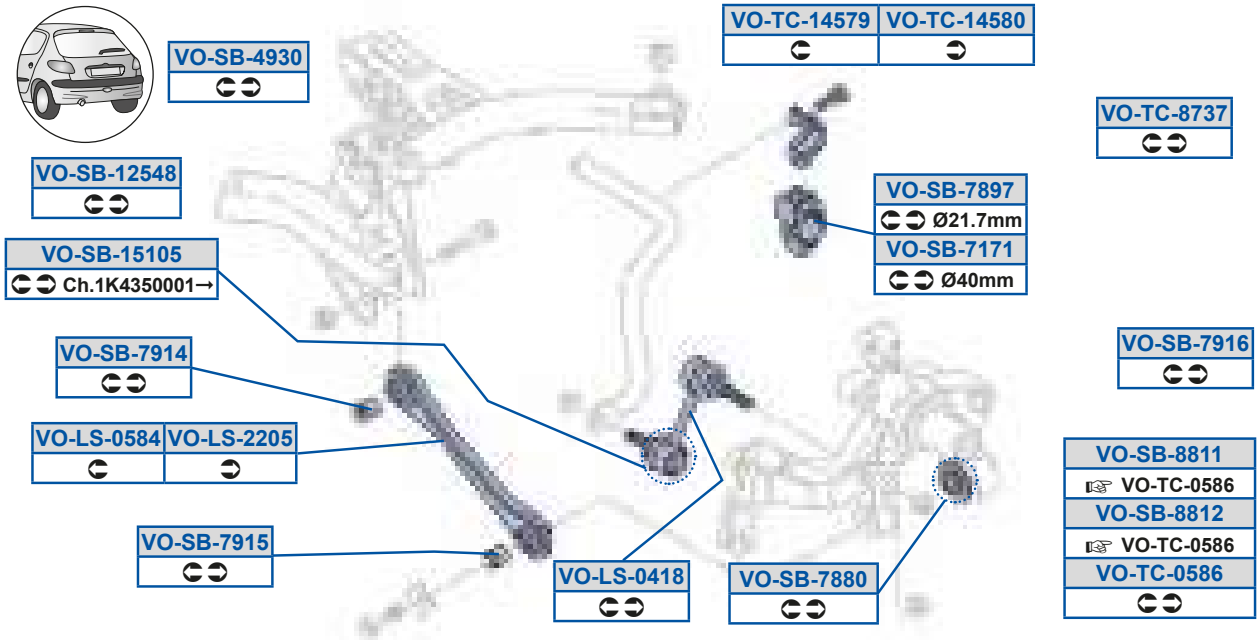

gh

MOOG

g_ 5Oi 59FDE
8Y7B9AF87O

g_ 5Zd5>>8C
8Y7C78CA7P38Y7C78CA7Q

g_ 5dP5>AAE
8Y78GG9A9U38Y78GG9A9X

g_ 5dP5FF99
8Y7C7C9EGO

g_ 5PX59FCG
8Y7B7EADDP38Y7B7EADDQ

g_ 5cY59C8E9
8Y7B9AF87O

g_ 5dP5BGA8
8Y7C7CCB8Q38Y7C7CCB8R

g_ 5dP5FF9>
8Y7C7C97AO

g_ 5PX59FD8
8Y7B7EADCP38Y7B7EADCQ

g_ 5cY5DD8D

g_ 5dP5E9E9
8Y7C88BAGS

g_ 5eQ58CFD
8Y7C7CA9AV38Y7C7CA9Ad

g_ 5Sd59FDF
8Y7B9AF88O38Y7B9AF88P

g_ 5dP58B>F
8Y7B7E8F938Y7B7E8F9O

g_ 5dP5EFF8
8Y7C7CCCA38Y7C7CCCAO

g_ 5eQ59BCEG
8t 7C7C99AT

g_ 5Sd59FDG
8Y7B9AF89O38Y7B9AF89P

g_ 5dP58BA8
8Y78GG9A8U38Y78GG9A8X

g_ 5dP5EFGE
8Y7C88A9EOo

g_ 5eQ59BCF8
8t 7C7C99BT

g_ 5Zd58B9F
8Y7C7CBDCO038Y7C7CBDCQ

g_ 5dP5988DD
8Y7B899BGP3Dd7B899BGQ

g_ 5dP5EG9B
8Y7C78CB8Q

g_ 5eQ5FEAE
8Y7C7CA88O038Y7C7CA88OP

g_ 5Zd58CFB
8Y7C78C9GS38Y7C78C9GT

g_ 5dP59>CBF
8Y7C7CCCA38Y7C7CCCAO

g_ 5dP5EG9C
8Y7C7CCBAO

g_ 5h a59FD9
8Y7B7E8C9O038Y7B7E8C9OS

g_ 5Zd59FE8
8Y7B88A8CP38Y7B88A8CX

g_ 5dP59C98C
8Y7C7CBDCQ /40

g_ 5dP5EG9D
8Y7C7C8E8Q38Y7C7C8EAQ

g_ 5h a59FD>
8Y7B7E8C8O038Y7B7E8C8OS

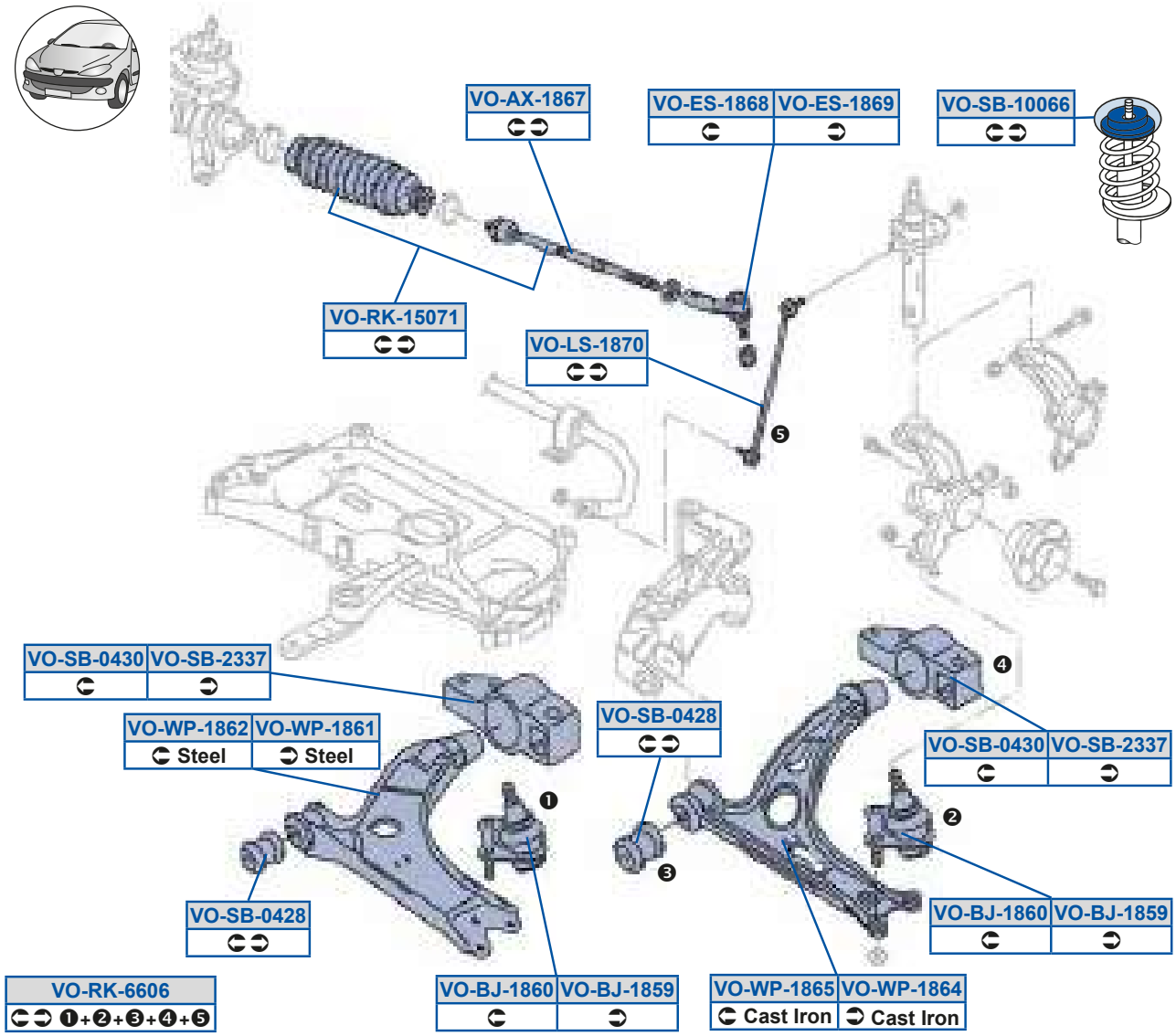
VO-AX-1867
VO-ES-1868
VO-ES-1869
VO-SB-10066
VO-RK-15071
VO-LS-1870
❺
VO-SB-0430
VO-SB-2337
VO-WP-1862
Steel
VO-WP-1861
Steel
VO-SB-0428
❹
VO-SB-0430
VO-SB-2337
❶
❷
❸
VO-SB-0428
VO-BJ-1860
VO-BJ-1859
VO-RK-6606
❶+❷+❸+❹+❺
VO-BJ-1860
VO-BJ-1859
VO-WP-1865
Cast Iron
VO-WP-1864
Cast Iron

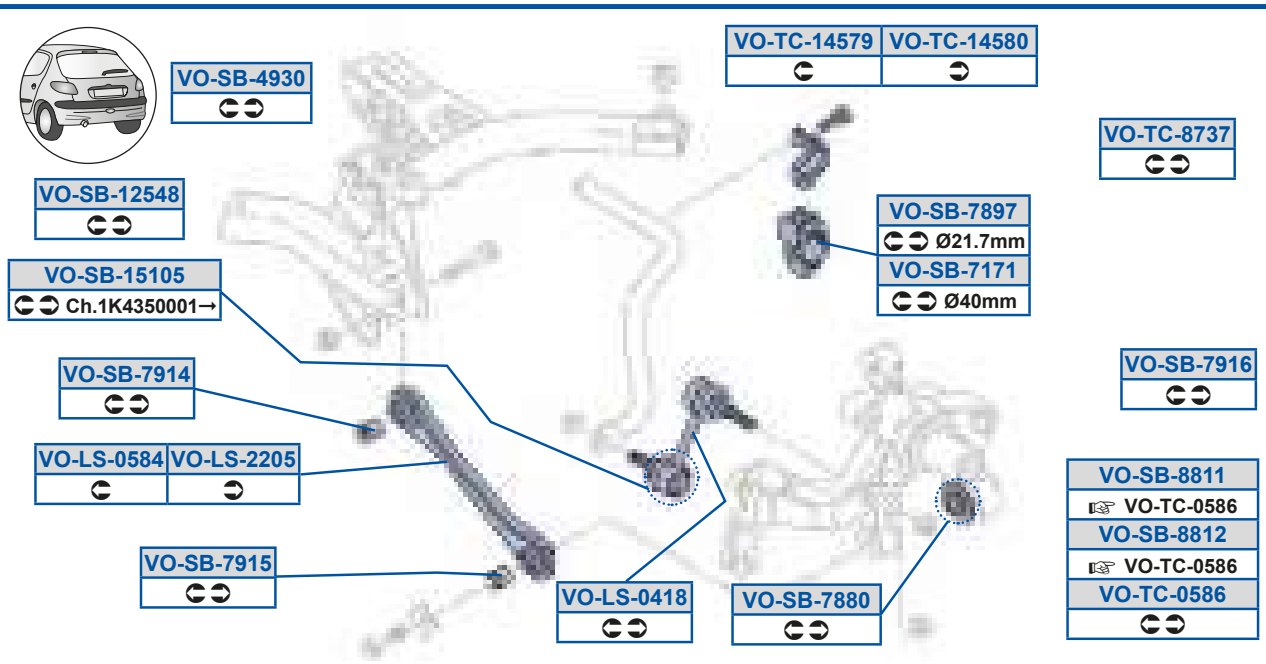
VO-SB-4930
VO-TC-14579
VO-TC-14580
VO-TC-8737
VO-SB-12548
VO-SB-7897
Ø21.7mm
VO-SB-7171
Ø40mm
VO-SB-15105
Ch.1K4350001→
VO-SB-7916
VO-SB-7914
VO-LS-0584
VO-LS-2205
VO-SB-8811
VO-TC-0586
VO-SB-8812
VO-TC-0586
VO-TC-0586
VO-SB-7915
VO-LS-0418
VO-SB-7880

g_ 5h a 59FDB

8Y7B7E8C90Q38Y7B7E8C9a

g_ 5h a 59FDC

8Y7B7E8C80Q38Y7B7E8C8a

gh e r 03>7>88A 5L 8C7>89C119epn

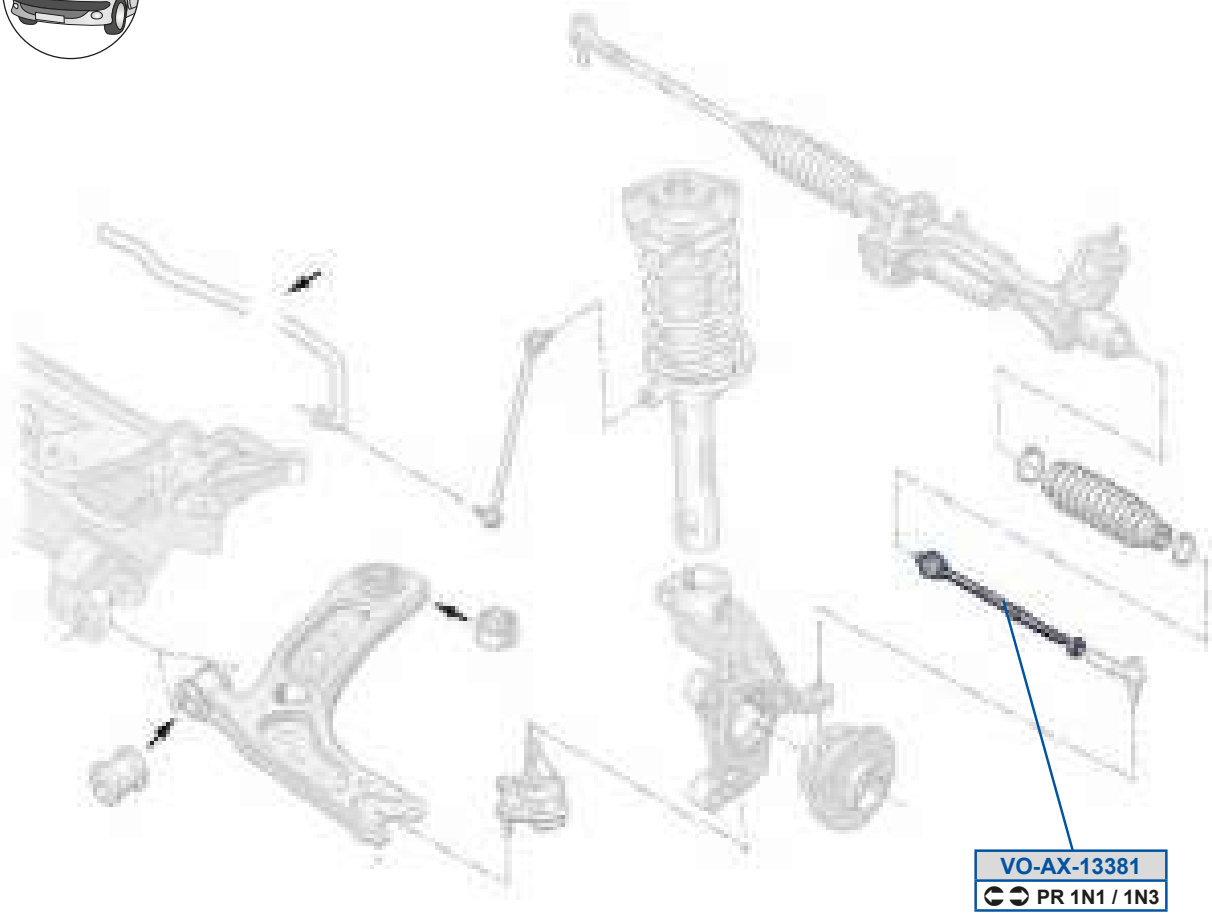

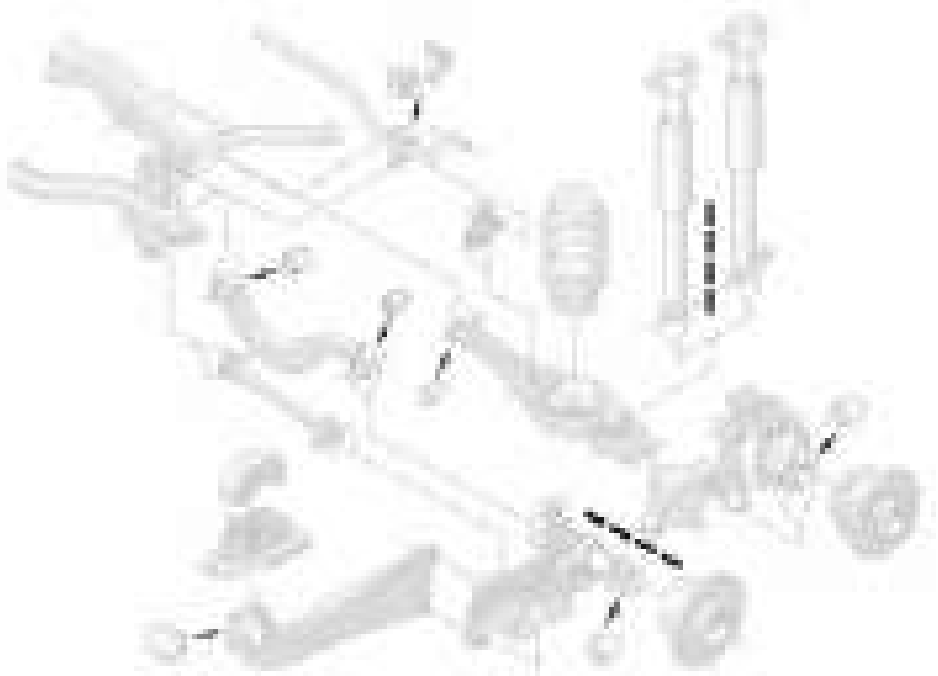

MOOG

g_ 5Oi 59AAF9

CD8B9AF87

gh

[f ZeWJO] g ŒVr 4 ESr 1	8B78A	8F79C	ec O] da_ceSc g ŒXr 7ETR1	8B78A	8F79C
ec O] da_ceSc g P ŒVO7VV7SO7SV1	8B78A	8F79C	ec O] da_ceSc g P ŒVr 7ESr 1	8B78A	8F79C

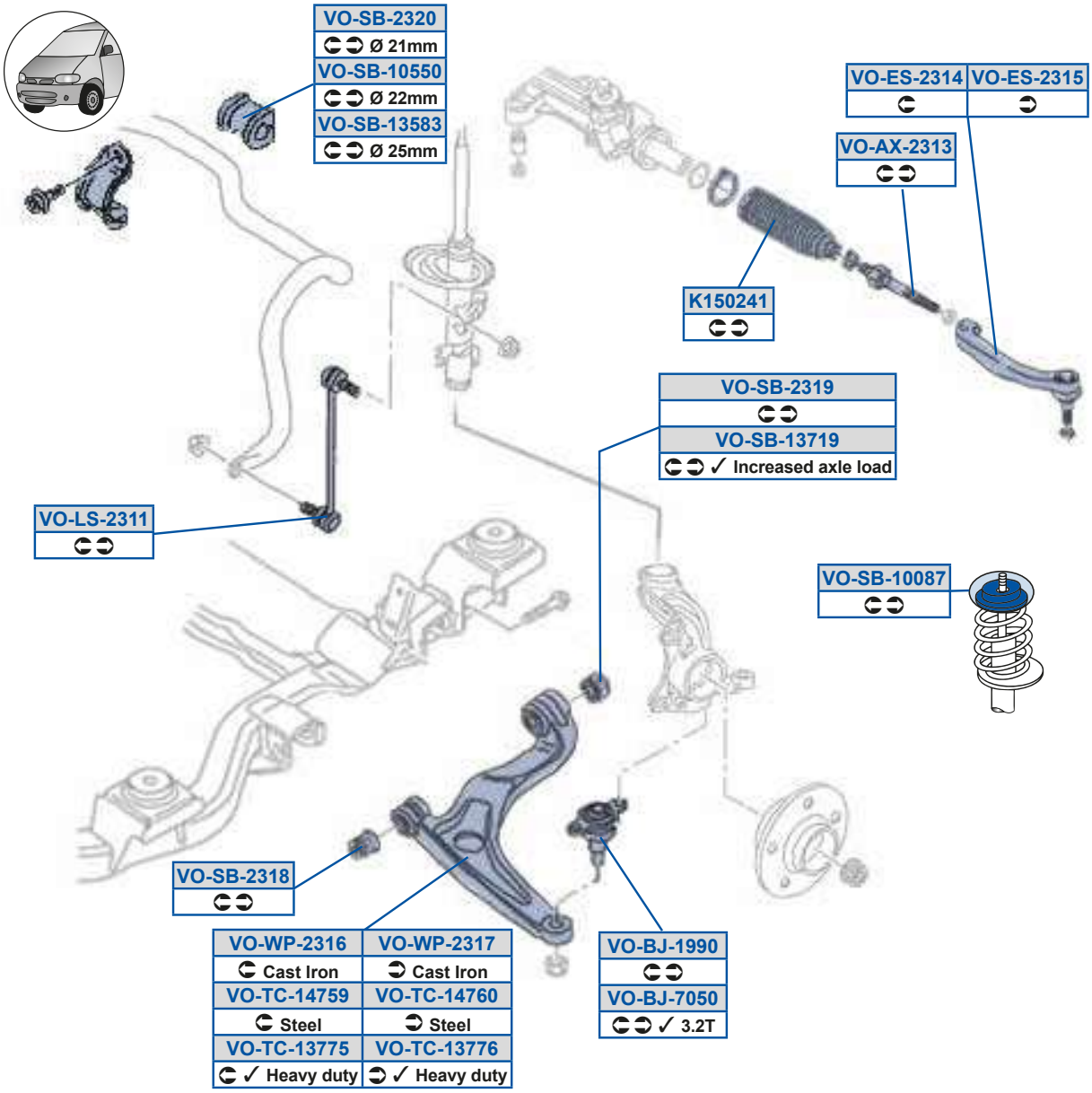

VO-SB-13717

Y9C8>B9
EV7B99FA8

g_ 5dP598CC8
EVCB88A8A0

g_ 5dP5>A9G
EV7B7E8F90

g_ 5Oi 5>A9A
EV7B8GF7AP /40

g_ 5dP598FEE
EV7C88B8B

g_ 5dP5>A>8
EV7B88A8A

g_ 5PX59GG8
ES7B7EAD83EV7B7EAD8

g_ 5dP598FEF
EV7B88A8B

g_ 5eQ59AEEC
EVFB7E8C8P

g_ 5PX5E8C8
EVFB7EAD83EVFB7EAD80

g_ 5dP59A>FF
EVCC88B8B0

g_ 5eQ59AEED
EVFB7E8C9P

g_ 5Sd5>A9B
ES7B99F8E3EV7B99F8E0

g_ 5dP59ACFA
EVCB88A8AP

g_ 5eQ59BECG
ES7B7E8C8P3ES7B7E8C8Q

g_ 5Sd5>A9C
ES7B99F8F3EV7B99F8F0

g_ 5dP59AE9E
EV7C788A90

g_ 5eQ59BED8
ES7B7E8C9P3ES7B7E8C9Q

g_ 5Zd5>A99
EV7B88A8E3EV7B88A8E0

g_ 5dP59AE9G
EV7B7E8F93EV7B7E8F90

g_ 5h a5>A9D
EV7B7E8C8S3EV7B7E8C8T

g_ 5dP5988FE
ES7B89A8G3EV7B899BG0

g_ 5dP5>A9F
EV7B7E8FA

g_ 5h a5>A9E
EV7B7E8C9S3EV7B7E8C9T

f a 09; 949; ; 4PZ94PZ; 1	9; 799		

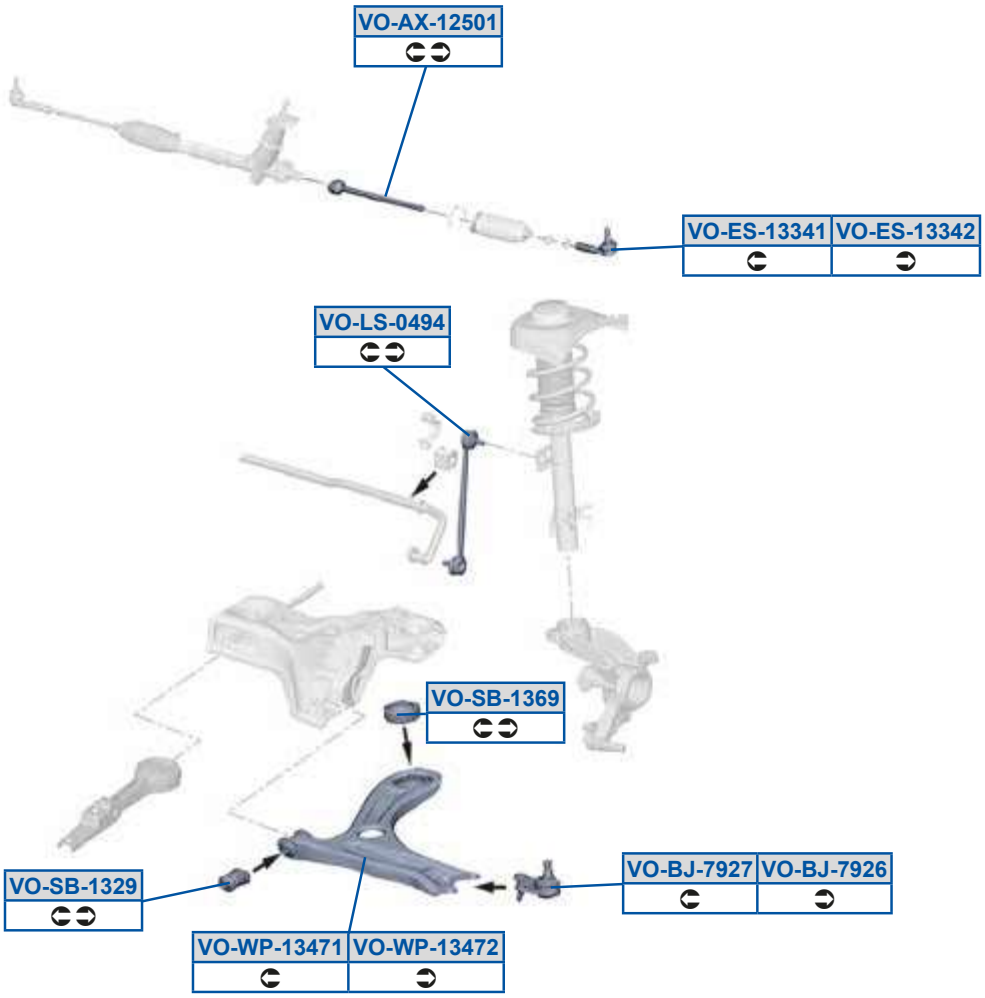

MOOG

g_ 5Oi 59>C89
8o7B9AF87O

g_ 5PX5EG>D
Cu7B7EADDO3Dn7B7EADD

g_ 5PX5EG>E
Cu7B7EADCO3Dn7B7EADC

g_ 5Sd59AAB9
8o7B9AF88O

g_ 5Sd59AAB>
8o7B9AF89O

g_ 5Zd58BGB
DI 7B88A8CO3DI 7B88A8CP

g_ 5dP59A>G
8G8B7E8F93ACEB7E8F9

g_ 5dP59ADG
8X7B7E8F838X7B7E8F8O

g_ 5h a59ABE9
8o7B7E8C8

g_ 5h a59ABE>
8o7B7E8C9

AL-AX-10998
ALFA ROMEO
Giulietta (2010->) 15

AL-AX-1223
ALFA ROMEO
Alfa 147 - GT 5
Alfa 156 7

AL-AX-1435
ALFA ROMEO
Alfa 166 11

AL-AX-1681
ALFA ROMEO
Alfa 145 - 146 (12/1996 ->) 3
GTV - Spider (09/1994 ->) 17
FIAT
Coupé 301
LANCIA
Delta II (1993 ->) 583

AL-AX-1699
ALFA ROMEO
Alfa 145 - 146 (12/1996 ->) 3
GTV - Spider (09/1994 ->) 17

AL-AX-5416
ALFA ROMEO
Alfa 159 9
Brera / Spider 13

AL-BJ-10774
ALFA ROMEO
Giulietta (2010->) 15

AL-DS-7511
ALFA ROMEO
Alfa 145 - 146 (->12/1996) 1

AL-DS-7512
ALFA ROMEO
Alfa 145 - 146 (->12/1996) 1

AL-ES-0050
ALFA ROMEO
Alfa 147 - GT 5
Alfa 156 7
Alfa 166 11

AL-ES-0051
ALFA ROMEO
Alfa 147 - GT 5
Alfa 156 7
Alfa 166 11

AL-ES-0265
ALFA ROMEO
Alfa 145 - 146 (->12/1996) 1

AL-ES-10781
ALFA ROMEO
Giulietta (2010->) 15

AL-ES-10782
ALFA ROMEO
Giulietta (2010->) 15

AL-ES-5417
ALFA ROMEO
Alfa 159 9

...AL-ES-5417
Brera / Spider 13

AL-ES-5418
ALFA ROMEO
Alfa 159 9
Brera / Spider 13

AL-ES-7513
ALFA ROMEO
Alfa 145 - 146 (->12/1996) 1

AL-LS-0043
ALFA ROMEO
GTV - Spider (09/1994 ->) 17

AL-LS-0052
ALFA ROMEO
Alfa 147 - GT 5
Alfa 156 7

AL-LS-0263
ALFA ROMEO
GTV - Spider (09/1994 ->) 17

AL-LS-0266
ALFA ROMEO
GTV - Spider (09/1994 ->) 17

AL-LS-10443
ALFA ROMEO
Giulietta (2010->) 15

AL-LS-10444
ALFA ROMEO
Giulietta (2010->) 15

AL-LS-1754
ALFA ROMEO
Alfa 166 11

AL-LS-3296
ALFA ROMEO
Alfa 166 11

AL-LS-3297
ALFA ROMEO
Alfa 166 11

AL-LS-5093
ALFA ROMEO
Alfa 159 9
Brera / Spider 13

AL-LS-5094
ALFA ROMEO
Alfa 159 9
Brera / Spider 13

AL-LS-5095
ALFA ROMEO
Alfa 159 9
Brera / Spider 13

AL-LS-5096
ALFA ROMEO
Alfa 159 9
Brera / Spider 13

AL-LS-7410
ALFA ROMEO
Alfa 166 11

AL-LS-7411
ALFA ROMEO
Alfa 166 11

AL-LS-7542
ALFA ROMEO
Alfa 147 - GT 5
Alfa 156 7

AL-RK-15075
ALFA ROMEO
Alfa 159 9
Brera / Spider 13

AL-SB-0499
ALFA ROMEO
Alfa 147 - GT 5
Alfa 156 7

AL-SB-0500
ALFA ROMEO
Alfa 147 - GT 5
Alfa 156 7

AL-SB-0501
ALFA ROMEO
Alfa 147 - GT 5
Alfa 156 7

AL-SB-0502
ALFA ROMEO
Alfa 147 - GT 5
Alfa 156 7

AL-SB-0503
ALFA ROMEO
Alfa 147 - GT 5
Alfa 156 7

AL-SB-0527
ALFA ROMEO
Alfa 147 - GT 5
Alfa 156 7

AL-SB-10777
ALFA ROMEO
Giulietta (2010->) 15

AL-SB-10778
ALFA ROMEO
Giulietta (2010->) 15

AL-SB-10834
ALFA ROMEO
Alfa 147 - GT 5
Alfa 156 7

AL-SB-1233
ALFA ROMEO
Alfa 145 - 146 (->12/1996) 1
Alfa 145 - 146 (12/1996 ->) 3
GTV - Spider (09/1994 ->) 17
FIAT
Brava - Bravo I 297
Tempra - Tipo 349

...AL-SB-1233
LANCIA
Dedra 581
Delta II (1993 ->) 583

AL-SB-1720
ALFA ROMEO
Alfa 147 - GT 5
Alfa 156 7

AL-SB-1721
ALFA ROMEO
Alfa 147 - GT 5
Alfa 156 7

AL-SB-2391
ALFA ROMEO
Alfa 145 - 146 (->12/1996) 1
Alfa 145 - 146 (12/1996 ->) 3
FIAT
Brava - Bravo I 297
Tempra - Tipo 349
LANCIA
Dedra 581
Delta II (1993 ->) 583

AL-SB-2396
ALFA ROMEO
Alfa 166 11

AL-SB-2397
ALFA ROMEO
Alfa 166 11

AL-SB-2398
ALFA ROMEO
Alfa 166 11

AL-SB-2399
ALFA ROMEO
Alfa 166 11

AL-SB-2402
ALFA ROMEO
Alfa 166 11

AL-SB-3170
LANCIA
Dedra 581
Delta II (1993 ->) 583

AL-SB-5101
ALFA ROMEO
Alfa 159 9
Brera / Spider 13

AL-SB-5102
ALFA ROMEO
Alfa 159 9
Brera / Spider 13

AL-SB-5103
ALFA ROMEO
Alfa 159 9
Brera / Spider 13

AL-SB-5104
ALFA ROMEO
Alfa 159 9

MOOG

...AL-SB-5104
Brera / Spider 13

AL-SB-5105
ALFA ROMEO
Alfa 159 9
Brera / Spider 13

AL-SB-5106
ALFA ROMEO
Alfa 159 9
Brera / Spider 13

AL-SB-6628
ALFA ROMEO
Alfa 147 - GT 5
Alfa 156 7

AL-SB-6687
ALFA ROMEO
Alfa 147 - GT 5
Alfa 156 7

AL-SB-6688
ALFA ROMEO
Alfa 166 11

AL-SB-7338
ALFA ROMEO
Alfa 147 - GT 5
Alfa 156 7

AL-SB-7339
ALFA ROMEO
Alfa 147 - GT 5
Alfa 156 7

AL-SB-7340
ALFA ROMEO
Alfa 147 - GT 5
Alfa 156 7

AL-SB-7341
ALFA ROMEO
Alfa 147 - GT 5
Alfa 156 7

AL-SB-9686
ALFA ROMEO
Alfa 145 - 146 (->12/1996) 1
Alfa 145 - 146 (12/1996 ->) 3

AL-SB-9688
ALFA ROMEO
Alfa 145 - 146 (->12/1996) 1
Alfa 145 - 146 (12/1996 ->) 3

AL-SB-9692
LANCIA
Y 595

AL-TC-0056
ALFA ROMEO
Alfa 147 - GT 5
Alfa 156 7

AL-TC-0057
ALFA ROMEO
Alfa 147 - GT 5

...AL-TC-0057
Alfa 156 7

AL-TC-10669
ALFA ROMEO
Alfa 147 - GT 5
Alfa 156 7

AL-TC-10670
ALFA ROMEO
Alfa 147 - GT 5
Alfa 156 7

AL-TC-10671
ALFA ROMEO
Alfa 166 11

AL-TC-10672
ALFA ROMEO
Alfa 166 11

AL-TC-3623
ALFA ROMEO
Alfa 147 - GT 5
Alfa 156 7

AL-TC-3624
ALFA ROMEO
Alfa 147 - GT 5
Alfa 156 7

AL-TC-5097
ALFA ROMEO
Alfa 159 9
Brera / Spider 13

AL-TC-5098
ALFA ROMEO
Alfa 159 9
Brera / Spider 13

AL-TC-5099
ALFA ROMEO
Alfa 159 9
Brera / Spider 13

AL-TC-5100
ALFA ROMEO
Alfa 159 9
Brera / Spider 13

AL-TC-7983
ALFA ROMEO
Alfa 147 - GT 5
Alfa 156 7

AL-TC-7984
ALFA ROMEO
Alfa 147 - GT 5
Alfa 156 7

AL-TC-8079
ALFA ROMEO
Alfa 147 - GT 5
Alfa 156 7

AL-TC-8080
ALFA ROMEO
Alfa 147 - GT 5

...AL-TC-8080
Alfa 156 7

AL-TC-8104
ALFA ROMEO
Alfa 159 9
Brera / Spider 13

AL-TC-8105
ALFA ROMEO
Alfa 159 9
Brera / Spider 13

AL-TC-8865
ALFA ROMEO
Alfa 166 11

AL-TC-8866
ALFA ROMEO
Alfa 166 11

AL-TC-8867
ALFA ROMEO
Alfa 145 - 146 (->12/1996) 1
Alfa 145 - 146 (12/1996 ->) 3
GTV - Spider (09/1994 ->) 17
FIAT
Brava - Bravo I 297
Coupé 301
Marea 321
LANCIA
Dedra 581
Delta II (1993 ->) 583

AL-TC-8868
ALFA ROMEO
Alfa 145 - 146 (->12/1996) 1
Alfa 145 - 146 (12/1996 ->) 3
GTV - Spider (09/1994 ->) 17
FIAT
Brava - Bravo I 297
Coupé 301
Marea 321
LANCIA
Dedra 581
Delta II (1993 ->) 583

AL-WP-10779
ALFA ROMEO
Giulietta (2010->) 15

AL-WP-10780
ALFA ROMEO
Giulietta (2010->) 15

AL-WP-1436
ALFA ROMEO
Alfa 166 11

AL-WP-1437
ALFA ROMEO
Alfa 166 11

AL-WP-2394
ALFA ROMEO
Alfa 166 11

AL-WP-2395
ALFA ROMEO
Alfa 166 11

AL-WP-7526
ALFA ROMEO
Alfa 145 - 146 (->12/1996) 1
Alfa 145 - 146 (12/1996 ->) 3
GTV - Spider (09/1994 ->) 17
FIAT
Brava - Bravo I 297
Coupé 301
Marea 321
LANCIA
Dedra 581
Delta II (1993 ->) 583

AL-WP-7527
ALFA ROMEO
Alfa 145 - 146 (->12/1996) 1
Alfa 145 - 146 (12/1996 ->) 3
GTV - Spider (09/1994 ->) 17
FIAT
Brava - Bravo I 297
Coupé 301
Marea 321
LANCIA
Dedra 581
Delta II (1993 ->) 583

AMGCK3198
JEEP
Cherokee II [KJ] 517

AMGDS1430
JEEP
Wrangler II (08/1996 -> 04/2007) [TJ] 525

AMGDS1452S
JEEP
Grand Cherokee II (04/1999->) [WJ, WG] 519

AMGES3095R
JEEP
Wrangler II (08/1996 -> 04/2007) [TJ] 525

AMGES3096L
JEEP
Wrangler II (08/1996 -> 04/2007) [TJ] 525

AMGES3472
JEEP
Grand Cherokee II (04/1999->) [WJ, WG] 519

AMGES3473
JEEP
Grand Cherokee II (04/1999->) [WJ, WG] 519

AMGES3474
JEEP
Grand Cherokee II (04/1999->) [WJ, WG] 519

AMGES3475
JEEP
Grand Cherokee II (04/1999->) [WJ, WG] 519

AMGES3535
JEEP
Cherokee II [KJ] 517

AMGES3536
JEEP
Cherokee II [KJ] 517

AMGEV362
CHRYSLER
Voyager III [GS] 173

AMGEV404
CHRYSLER
PT Cruiser 171

AMGEV405
CHRYSLER
Voyager IV [RG, RS] 175

AMGEV800407
JEEP
Cherokee II [KJ] 517

AMGEV80782
JEEP
Grand Cherokee III (06/2005 ->) [WH, WK] 521

AMGK3134T
JEEP
Grand Cherokee II (04/1999->) [WJ, WG] 519
Wrangler II (08/1996 -> 04/2007) [TJ] 525

AMGK3147
JEEP
Wrangler II (08/1996 -> 04/2007) [TJ] 525

AMGK3160
JEEP
Cherokee II [KJ] 517

AMGK3161T
JEEP
Wrangler II (08/1996 -> 04/2007) [TJ] 525

AMGK3166
JEEP
Grand Cherokee II (04/1999->) [WJ, WG] 519
Wrangler II (08/1996 -> 04/2007) [TJ] 525

AMGK3167
JEEP
Grand Cherokee II (04/1999->) [WJ, WG] 519

AMGK3185
JEEP
Grand Cherokee II (04/1999->) [WJ, WG] 519

AMGK3197
JEEP
Wrangler II (08/1996 -> 04/2007) [TJ] 525

AMGK3199
JEEP
Cherokee II [KJ] 517

AMGK3201
JEEP
Grand Cherokee II (04/1999->) [WJ, WG] 519

AMGK7147
CHRYSLER
PT Cruiser 171

AMGK7275
FORD
Ranger [ER, EQ] 403

AMGK7286
CHRYSLER
Voyager IV [RG, RS] 175

AMGK7301
CHRYSLER
Voyager IV [RG, RS] 175

AMGK7348
CHRYSLER
PT Cruiser 171

AMGK7351
JEEP
Cherokee II [KJ] 517

AMGK7352
JEEP
Wrangler II (08/1996 -> 04/2007) [TJ] 525

AMGK7374
CHRYSLER
Voyager IV [RG, RS] 175

AMGK7375
CHRYSLER
PT Cruiser 171

AMGK7389
JEEP
Cherokee II [KJ] 517

AMGK7390
JEEP
Cherokee II [KJ] 517

AMGK7403
JEEP
Wrangler II (08/1996 -> 04/2007) [TJ] 525

AMGK7420
JEEP
Wrangler II (08/1996 -> 04/2007) [TJ] 525

AMGK7429
JEEP
Grand Cherokee II (04/1999->) [WJ, WG] 519

AMGK7450
JEEP
Grand Cherokee II (04/1999->) [WJ, WG] 519

AMGK7455
MERCEDES-BENZ
Sprinter I [901, 902, 903, 904, 905] 739
VW
LT II 28-46 1435

AMGK7457
CHRYSLER
PT Cruiser 171

AMGK80255
NISSAN
Murano 823

AMGK80256
NISSAN
Murano 823

AMGK80604
JEEP
Grand Cherokee III (06/2005 ->) [WH, WK] 521

AMGK80861
JEEP
Grand Cherokee III (06/2005 ->) [WH, WK] 521

AMGK8695T
FORD
Ranger [ER, EQ] 403

AMGK8704
FORD
Ranger [ER, EQ] 403

AMGK8705
FORD
Ranger [ER, EQ] 403

AMGK8710T
FORD
Ranger [ER, EQ] 403

AMGK90489
HONDA
CRV II (09/2001 ->) 441

AMGK9761
HONDA
Accord VI (1998 ->2003) 423
ROVER
600 1071

AU-AX-12545
AUDI
A6 (2010 ->) [4G2, 4G5, 4GH] 59
A7 [4GA] 61
A8 (2010->) [4H_] 67
Q5 (11/2008 ->) [8R] 73

AU-AX-15387
AUDI
TT (07/2014 ->) [FV_] 81

AU-AX-4428
AUDI
A8 (10/2002 -> 07/2010) [4E_] 65

...AU-AX-4428
VW
Phaeton [3D_] 1453

AU-AX-4712
AUDI
A6 (2004 ->2011) [4F2, 4F5, 4FH] 57

AU-AX-5193
AUDI
A4 (2008 ->) [8K_] 43
A5 (06/2007 ->) [8T3, 8TA, 8F7] 47
TT (08/2006 -> 06/2014) [8J3, 8J9] 79

AU-AX-6982
AUDI
TT (-> 08/2006) [8N3, 8N9] 77
SEAT
Leon I (-> 2005) [1M1] 1113
VW
Golf IV 1415
New beetle 1439

AU-BJ-13260
AUDI
A4 (2008 ->) [8K_] 43
A5 (06/2007 ->) [8T3, 8TA, 8F7] 47
A6 (2010 ->) [4G2, 4G5, 4GH] 59

AU-BJ-13655
AUDI
A8 (2010->) [4H_] 67

AU-BJ-5194
AUDI
TT (08/2006 -> 06/2014) [8J3, 8J9] 79

AU-BJ-5195
AUDI
TT (08/2006 -> 06/2014) [8J3, 8J9] 79

AU-BJ-7440
AUDI
A4 (2008 ->) [8K_] 43
A5 (06/2007 ->) [8T3, 8TA, 8F7] 47
A6 (2010 ->) [4G2, 4G5, 4GH] 59
A7 [4GA] 61
Q5 (11/2008 ->) [8R] 73

AU-DS-0717
AUDI
TT (-> 08/2006) [8N3, 8N9] 77

AU-DS-0718
AUDI
TT (-> 08/2006) [8N3, 8N9] 77

AU-DS-5061
AUDI
A8 (10/2002 -> 07/2010) [4E_] 65

...AU-DS-5061

VW

Phaeton [3D_] 1453

AU-DS-8231

AUDI

A6 (1994 -> 1997) [4A, C4] 51

AU-DS-8232

AUDI

A6 (1994 -> 1997) [4A, C4] 51

AU-DS-8294

AUDI

A4 (-> 11/2004) [8D, 8E, 8H, B5, B6] 35

AU-ES-10889

AUDI

A2 [8Z0] 23

AU-ES-10890

AUDI

A2 [8Z0] 23

AU-ES-10907

AUDI

A4 (2008 ->) [8K_] 43

A5 (06/2007 ->) [8T3, 8TA, 8F7] 47

A6 (2010 ->) [4G2, 4G5, 4GH] 59

A7 [4GA] 61

AU-ES-10908

AUDI

A4 (2008 ->) [8K_] 43

A5 (06/2007 ->) [8T3, 8TA, 8F7] 47

A6 (2010 ->) [4G2, 4G5, 4GH] 59

A7 [4GA] 61

AU-ES-13647

AUDI

A8 (2010->) [4H_] 67

AU-ES-13648

AUDI

A8 (2010->) [4H_] 67

AU-ES-3721

AUDI

A1 (05/2010 ->) [8X_] 21

SEAT

Cordoba (09/2002 ->) [6L2] 1095

Ibiza IV (02/2002 ->) [6L1] 1107

Ibiza V (03/2008 ->) [6J_ - 6P_] 1109

SKODA

Fabia I [6Y_] 1135

Fabia II [542 - 545] 1137

Roomster / Praktik 1155

VW

Fox (10/2003 ->) [1Z1 - 1Z3] 1411

...AU-ES-3721

Polo (2001 -> 2009) [9N] 1459

AU-ES-3723

AUDI

A1 (05/2010 ->) [8X_] 21

SEAT

Cordoba (09/2002 ->) [6L2] 1095

Ibiza IV (02/2002 ->) [6L1] 1107

Ibiza V (03/2008 ->) [6J_ - 6P_] 1109

SKODA

Fabia I [6Y_] 1135

Fabia II [542 - 545] 1137

Roomster / Praktik 1155

VW

Fox (10/2003 ->) [1Z1 - 1Z3] 1411

Polo (2001 -> 2009) [9N] 1459

AU-ES-3839

AUDI

A4 (11/2004 -> 2007) [8EC, 8ED] 41

A6 (2004 ->2011) [4F2, 4F5, 4FH] 57

SEAT

Exeo 1097

AU-ES-3890

AUDI

A6 (1997 -> 2004) [4B, C5] 53

VW

Passat (1996 -> 2000) [3B2 - 3B5] 1443

Passat (2000 -> 2005) [3B3 - 3B6] 1445

AU-ES-4918

AUDI

A8 (10/2002 -> 07/2010) [4E_] 65

VW

Phaeton [3D_] 1453

AU-ES-5191

AUDI

TT (08/2006 -> 06/2014) [8J3, 8J9] 79

AU-ES-5192

AUDI

TT (08/2006 -> 06/2014) [8J3, 8J9] 79

AU-ES-7149

AUDI

A6 (1994 -> 1997) [4A, C4] 51

AU-ES-7150

AUDI

A6 (1994 -> 1997) [4A, C4] 51

AU-ES-7377

AUDI

A4 (2008 ->) [8K_] 43

...AU-ES-7377

A5 (06/2007 ->) [8T3, 8TA, 8F7] 47

Q5 (11/2008 ->) [8R] 73

AU-ES-7378

AUDI

A4 (2008 ->) [8K_] 43

A5 (06/2007 ->) [8T3, 8TA, 8F7] 47

Q5 (11/2008 ->) [8R] 73

AU-LS-10678

AUDI

A4 (2008 ->) [8K_] 43

A5 (06/2007 ->) [8T3, 8TA, 8F7] 47

A6 (2010 ->) [4G2, 4G5, 4GH] 59

A7 [4GA] 61

AU-LS-14840

AUDI

Allroad (05/2000 -> 08/2005) [4BH, C5] 69

AU-LS-3717

AUDI

A4 (-> 11/2004) [8D, 8E, 8H, B5, B6] 35

A4 (11/2004 -> 2007) [8EC, 8ED] 41

SEAT

Exeo 1097

AU-LS-3718

AUDI

A4 (-> 11/2004) [8D, 8E, 8H, B5, B6] 35

A4 (11/2004 -> 2007) [8EC, 8ED] 41

SEAT

Exeo 1097

AU-LS-3898

AUDI

A4 (11/2004 -> 2007) [8EC, 8ED] 41

SEAT

Exeo 1097

AU-LS-4193

AUDI

A3 (-> 05/2003) [8L1] 25

TT (-> 08/2006) [8N3, 8N9] 77

SKODA

Octavia I (-> 2004) [1U_] 1143

VW

Bora 1397

Golf IV 1415

AU-LS-4934

AUDI

A6 (2004 ->2011) [4F2, 4F5, 4FH] 57

A8 (10/2002 -> 07/2010) [4E_] 65

AU-LS-5067

AUDI

A8 (10/2002 -> 07/2010) [4E_] 65

AU-LS-5068

AUDI

A8 (10/2002 -> 07/2010) [4E_] 65

AU-LS-5421

AUDI

A6 (2004 ->2011) [4F2, 4F5, 4FH] 57

AU-LS-5475

AUDI

A6 (2004 ->2011) [4F2, 4F5, 4FH] 57

AU-LS-7376

AUDI

A4 (2008 ->) [8K_] 43

A5 (06/2007 ->) [8T3, 8TA, 8F7] 47

A6 (2010 ->) [4G2, 4G5, 4GH] 59

A7 [4GA] 61

Q5 (11/2008 ->) [8R] 73

AU-LS-8044

AUDI

A5 (06/2007 ->) [8T3, 8TA, 8F7] 47

AU-LS-8241

AUDI

A8 (-> 09/2002) [4D2, 4D8] 63

AU-LS-8242

AUDI

A8 (-> 09/2002) [4D2, 4D8] 63

AU-LS-8295

AUDI

A4 (-> 11/2004) [8D, 8E, 8H, B5, B6] 35

AU-LS-8296

AUDI

A4 (-> 11/2004) [8D, 8E, 8H, B5, B6] 35

AU-LS-8351

AUDI

A4 (2008 ->) [8K_] 43

A5 (06/2007 ->) [8T3, 8TA, 8F7] 47

A6 (2010 ->) [4G2, 4G5, 4GH] 59

A7 [4GA] 61

Q5 (11/2008 ->) [8R] 73

AU-SB-1037

AUDI

A6 (1994 -> 1997) [4A, C4] 51

AU-SB-10586

AUDI

A4 (11/2004 -> 2007) [8EC, 8ED] 41

AU-SB-10693

AUDI

A6 (2010 ->) [4G2, 4G5, 4GH] 59
A7 [4GA] 61
A8 (2010->) [4H_] 67

AU-SB-10798

AUDI

A6 (2010 ->) [4G2, 4G5, 4GH] 59

AU-SB-1097

AUDI

A6 (1994 -> 1997) [4A, C4] 51

AU-SB-12570

AUDI

A4 (2008 ->) [8K_] 43
A5 (06/2007 ->) [8T3, 8TA, 8F7] 47
A6 (2010 ->) [4G2, 4G5, 4GH] 59
A7 [4GA] 61
A8 (2010->) [4H_] 67
Q5 (11/2008 ->) [8R] 73

AU-SB-12596

AUDI

A4 (2008 ->) [8K_] 43
A5 (06/2007 ->) [8T3, 8TA, 8F7] 47
Q5 (11/2008 ->) [8R] 73

AU-SB-13374

AUDI

A4 (-> 11/2004) [8D, 8E, 8H, B5, B6] 35

AU-SB-13386

AUDI

A5 (06/2007 ->) [8T3, 8TA, 8F7] 47
A6 (2010 ->) [4G2, 4G5, 4GH] 59
A7 [4GA] 61
A8 (2010->) [4H_] 67

AU-SB-13664

AUDI

A8 (2010->) [4H_] 67

AU-SB-13742

AUDI

A8 (2010->) [4H_] 67
Q5 (11/2008 ->) [8R] 73

AU-SB-13832

AUDI

A4 (2008 ->) [8K_] 43
A5 (06/2007 ->) [8T3, 8TA, 8F7] 47
Q5 (11/2008 ->) [8R] 73

AU-SB-14731

AUDI

A4 (-> 11/2004) [8D, 8E, 8H, B5, B6] 35

...AU-SB-14731

A4 (11/2004 -> 2007) [8EC, 8ED] 41

AU-SB-15103

AUDI

A4 (-> 11/2004) [8D, 8E, 8H, B5, B6] 35
A4 (11/2004 -> 2007) [8EC, 8ED] 41

SEAT

Exeo 1097

AU-SB-1722

AUDI

A6 (1994 -> 1997) [4A, C4] 51
A6 (1997 -> 2004) [4B, C5] 53

AU-SB-3878

AUDI

A2 [8Z0] 23

AU-SB-3879

AUDI

A2 [8Z0] 23

AU-SB-4455

AUDI

A4 (-> 11/2004) [8D, 8E, 8H, B5, B6] 35

AU-SB-4479

AUDI

A6 (1994 -> 1997) [4A, C4] 51

AU-SB-4500

AUDI

A6 (1994 -> 1997) [4A, C4] 51

AU-SB-4525

AUDI

A6 (1994 -> 1997) [4A, C4] 51

AU-SB-4843

AUDI

A6 (2004 ->2011) [4F2, 4F5, 4FH] 57

AU-SB-4844

AUDI

A6 (2004 ->2011) [4F2, 4F5, 4FH] 57
A8 (10/2002 -> 07/2010) [4E_] 65

VW

Phaeton [3D_] 1453

AU-SB-4847

AUDI

A3 (-> 05/2003) [8L1] 25
TT (-> 08/2006) [8N3, 8N9] 77

SEAT

Leon I (-> 2005) [1M1] 1113
Toledo II (04/1999 -> 09/2004) [1M2] 1125

SKODA

Octavia I (-> 2004) [1U_] 1143

...AU-SB-4847

VW

Bora 1397
Golf IV 1415
New beetle 1439

AU-SB-5236

AUDI

A4 (-> 11/2004) [8D, 8E, 8H, B5, B6] 35
A6 (2004 ->2011) [4F2, 4F5, 4FH] 57

AU-SB-5481

AUDI

A4 (-> 11/2004) [8D, 8E, 8H, B5, B6] 35
A6 (2004 ->2011) [4F2, 4F5, 4FH] 57

AU-SB-5485

AUDI

A4 (-> 11/2004) [8D, 8E, 8H, B5, B6] 35
A6 (2004 ->2011) [4F2, 4F5, 4FH] 57

AU-SB-5635

AUDI

A4 (-> 11/2004) [8D, 8E, 8H, B5, B6] 35
A4 (11/2004 -> 2007) [8EC, 8ED] 41
A6 (2004 ->2011) [4F2, 4F5, 4FH] 57

AU-SB-7256

AUDI

TT (-> 08/2006) [8N3, 8N9] 77

SEAT

Leon I (-> 2005) [1M1] 1113

AU-SB-7331

AUDI

A3 (-> 05/2003) [8L1] 25
TT (-> 08/2006) [8N3, 8N9] 77

SEAT

Leon I (-> 2005) [1M1] 1113

VW

Golf IV 1415
New beetle 1439

AU-SB-7357

AUDI

A4 (2008 ->) [8K_] 43
A5 (06/2007 ->) [8T3, 8TA, 8F7] 47
Q5 (11/2008 ->) [8R] 73

AU-SB-7436

AUDI

A2 [8Z0] 23

SKODA

Fabia I [6Y_] 1135

AU-SB-7439

AUDI

A4 (2008 ->) [8K_] 43

...AU-SB-7439

A5 (06/2007 ->) [8T3, 8TA, 8F7] 47
Q5 (11/2008 ->) [8R] 73

AU-SB-7441

AUDI

A4 (2008 ->) [8K_] 43
A5 (06/2007 ->) [8T3, 8TA, 8F7] 47
Q5 (11/2008 ->) [8R] 73

AU-SB-7443

AUDI

A6 (2004 ->2011) [4F2, 4F5, 4FH] 57

AU-SB-7444

AUDI

A6 (2004 ->2011) [4F2, 4F5, 4FH] 57

AU-SB-7755

AUDI

TT (08/2006 -> 06/2014) [8J3, 8J9] 79

AU-SB-7889

AUDI

Q7 (03/2006 -> 08/2015) [4L] 75

VW

Touareg I 1473

AU-SB-7890

AUDI

Q7 (03/2006 -> 08/2015) [4L] 75

VW

Touareg I 1473

AU-SB-7891

AUDI

Q7 (03/2006 -> 08/2015) [4L] 75

VW

Touareg I 1473

AU-SB-7912

AUDI

A4 (-> 11/2004) [8D, 8E, 8H, B5, B6] 35
A4 (11/2004 -> 2007) [8EC, 8ED] 41
A6 (2004 ->2011) [4F2, 4F5, 4FH] 57

SEAT

Exeo 1097

AU-SB-8039

AUDI

A2 [8Z0] 23

AU-SB-8106

AUDI

A4 (11/2004 -> 2007) [8EC, 8ED] 41

SEAT

Exeo 1097

MOOG

AU-SB-8107

AUDI

A4 (2008 ->) [8K_] 43

A5 (06/2007 ->) [8T3, 8TA, 8F7] 47

Q5 (11/2008 ->) [8R] 73

AU-SB-8995

AUDI

A6 (1994 -> 1997) [4A, C4] 51

AU-SB-9031

AUDI

A4 (-> 11/2004) [8D, 8E, 8H, B5, B6] 35

SEAT

Exeo 1097

AU-SB-9037

AUDI

A4 (-> 11/2004) [8D, 8E, 8H, B5, B6] 35

SEAT

Exeo 1097

AU-SB-9328

AUDI

A6 (1994 -> 1997) [4A, C4] 51

AU-SB-9515

AUDI

A4 (-> 11/2004) [8D, 8E, 8H, B5, B6] 35

A4 (11/2004 -> 2007) [8EC, 8ED] 41

A6 (2004 ->2011) [4F2, 4F5, 4FH] 57

SEAT

Exeo 1097

AU-TC-0674

AUDI

A4 (-> 11/2004) [8D, 8E, 8H, B5, B6] 35

A4 (11/2004 -> 2007) [8EC, 8ED] 41

A6 (1997 -> 2004) [4B, C5] 53

A8 (-> 09/2002) [4D2, 4D8] 63

Allroad (05/2000 -> 08/2005) [4BH, C5] 69

SEAT

Exeo 1097

SKODA

Superb I [3U4] 1157

VW

Passat (1996 -> 2000) [3B2 - 3B5] 1443

Passat (2000 -> 2005) [3B3 - 3B6] 1445

AU-TC-0678

AUDI

A4 (-> 11/2004) [8D, 8E, 8H, B5, B6] 35

A4 (11/2004 -> 2007) [8EC, 8ED] 41

A6 (1997 -> 2004) [4B, C5] 53

...AU-TC-0678

A8 (-> 09/2002) [4D2, 4D8] 63

Allroad (05/2000 -> 69

SEAT

Exeo 1097

SKODA

Superb I [3U4] 1157

VW

Passat (1996 -> 2000) [3B2 - 3B5] 1443

Passat (2000 -> 2005) [3B3 - 3B6] 1445

AU-TC-0723

AUDI

A4 (-> 11/2004) [8D, 8E, 8H, B5, B6] 35

A6 (1997 -> 2004) [4B, C5] 53

A8 (-> 09/2002) [4D2, 4D8] 63

SKODA

Superb I [3U4] 1157

VW

Passat (2000 -> 2005) [3B3 - 3B6] 1445

AU-TC-10622

AUDI

Q7 (03/2006 -> 08/2015) [4L] 75

PORSCHE

Cayenne I 987

VW

Touareg I 1473

Touareg II 1475

AU-TC-10799

AUDI

A4 (2008 ->) [8K_] 43

A5 (06/2007 ->) [8T3, 8TA, 8F7] 47

AU-TC-10800

AUDI

A4 (2008 ->) [8K_] 43

A5 (06/2007 ->) [8T3, 8TA, 8F7] 47

AU-TC-12623

AUDI

A4 (2008 ->) [8K_] 43

A5 (06/2007 ->) [8T3, 8TA, 8F7] 47

A6 (2010 ->) [4G2, 4G5, 4GH] 59

A7 [4GA] 61

Q5 (11/2008 ->) [8R] 73

AU-TC-12624

AUDI

A4 (2008 ->) [8K_] 43

A5 (06/2007 ->) [8T3, 8TA, 8F7] 47

A6 (2010 ->) [4G2, 4G5, 4GH] 59

A7 [4GA] 61

Q5 (11/2008 ->) [8R] 73

AU-TC-13653

AUDI

A8 (2010->) [4H_] 67

Q5 (11/2008 ->) [8R] 73

AU-TC-13654

AUDI

A8 (2010->) [4H_] 67

Q5 (11/2008 ->) [8R] 73

AU-TC-13665

AUDI

A6 (2010 ->) [4G2, 4G5, 4GH] 59

A7 [4GA] 61

AU-TC-13666

AUDI

A6 (2010 ->) [4G2, 4G5, 4GH] 59

A7 [4GA] 61

AU-TC-14553

AUDI

A8 (2010->) [4H_] 67

AU-TC-14554

AUDI

A8 (2010->) [4H_] 67

AU-TC-14871

AUDI

Q7 (03/2006 -> 08/2015) [4L] 75

AU-TC-4696

AUDI

A4 (11/2004 -> 2007) [8EC, 8ED] 41

SEAT

Exeo 1097

AU-TC-4697

AUDI

A4 (11/2004 -> 2007) [8EC, 8ED] 41

SEAT

Exeo 1097

AU-TC-4937

AUDI

A6 (2004 ->2011) [4F2, 4F5, 4FH] 57

AU-TC-4945

AUDI

A6 (2004 ->2011) [4F2, 4F5, 4FH] 57

AU-TC-4946

AUDI

A6 (2004 ->2011) [4F2, 4F5, 4FH] 57

AU-TC-5062

AUDI

A8 (10/2002 -> 07/2010) [4E_] 65

AU-TC-5063

AUDI

A8 (10/2002 -> 07/2010) [4E_] 65

VW

Phaeton [3D_] 1453

AU-TC-5064

AUDI

A8 (10/2002 -> 07/2010) [4E_] 65

VW

Phaeton [3D_] 1453

AU-TC-5065

AUDI

A8 (10/2002 -> 07/2010) [4E_] 65

VW

Phaeton [3D_] 1453

AU-TC-5196

AUDI

TT (08/2006 -> 06/2014) [8J3, 8J9] 79

AU-TC-5197

AUDI

TT (08/2006 -> 06/2014) [8J3, 8J9] 79

AU-TC-5479

AUDI

A6 (2004 ->2011) [4F2, 4F5, 4FH] 57

AU-TC-6995

AUDI

A4 (-> 11/2004) [8D, 8E, 8H, B5, B6] 35

A4 (11/2004 -> 2007) [8EC, 8ED] 41

A6 (1997 -> 2004) [4B, C5] 53

SEAT

Exeo 1097

AU-TC-6996

AUDI

A4 (-> 11/2004) [8D, 8E, 8H, B5, B6] 35

A4 (11/2004 -> 2007) [8EC, 8ED] 41

A6 (1997 -> 2004) [4B, C5] 53

SEAT

Exeo 1097

AU-TC-6997

AUDI

A4 (-> 11/2004) [8D, 8E, 8H, B5, B6] 35

A4 (11/2004 -> 2007) [8EC, 8ED] 41

A6 (1997 -> 2004) [4B, C5] 53

SEAT

Exeo 1097

AU-TC-6998

AUDI

A4 (-> 11/2004) [8D, 8E, 8H, B5, B6] 35

...AU-TC-6998

A4 (11/2004 -> 2007) [8EC, 8ED] 41
A6 (1997 -> 2004) [4B, C5] 53

SEAT

Exeo 1097

AU-TC-7207

AUDI

A6 (1994 -> 1997) [4A, C4] 51

AU-TC-7219

AUDI

A6 (1994 -> 1997) [4A, C4] 51

AU-TC-7352

AUDI

A4 (2008 ->) [8K_] 43
A5 (06/2007 ->) [8T3, 8TA, 8F7] 47
A6 (2010 ->) [4G2, 4G5, 4GH] 59
A7 [4GA] 61
Q5 (11/2008 ->) [8R] 73

AU-TC-7353

AUDI

A4 (2008 ->) [8K_] 43
A5 (06/2007 ->) [8T3, 8TA, 8F7] 47
A6 (2010 ->) [4G2, 4G5, 4GH] 59
A7 [4GA] 61
Q5 (11/2008 ->) [8R] 73

AU-TC-7355

AUDI

A4 (2008 ->) [8K_] 43
A5 (06/2007 ->) [8T3, 8TA, 8F7] 47
A6 (2010 ->) [4G2, 4G5, 4GH] 59
A7 [4GA] 61

AU-TC-7356

AUDI

A4 (2008 ->) [8K_] 43
A5 (06/2007 ->) [8T3, 8TA, 8F7] 47
A6 (2010 ->) [4G2, 4G5, 4GH] 59
A7 [4GA] 61

AU-TC-7369

AUDI

A4 (2008 ->) [8K_] 43
A5 (06/2007 ->) [8T3, 8TA, 8F7] 47
A6 (2010 ->) [4G2, 4G5, 4GH] 59
A7 [4GA] 61
Q5 (11/2008 ->) [8R] 73

AU-TC-7372

AUDI

A4 (2008 ->) [8K_] 43
A5 (06/2007 ->) [8T3, 8TA, 8F7] 47

...AU-TC-7372

A6 (2010 ->) [4G2, 4G5, 4GH] 59
A7 [4GA] 61
Q5 (11/2008 ->) [8R] 73

AU-TC-7373

AUDI

A4 (2008 ->) [8K_] 43
A5 (06/2007 ->) [8T3, 8TA, 8F7] 47
Q5 (11/2008 ->) [8R] 73

AU-TC-7374

AUDI

A4 (2008 ->) [8K_] 43
A5 (06/2007 ->) [8T3, 8TA, 8F7] 47
Q5 (11/2008 ->) [8R] 73

AU-TC-7437

AUDI

A4 (2008 ->) [8K_] 43
A5 (06/2007 ->) [8T3, 8TA, 8F7] 47
Q5 (11/2008 ->) [8R] 73

AU-TC-7438

AUDI

A4 (2008 ->) [8K_] 43
A5 (06/2007 ->) [8T3, 8TA, 8F7] 47
Q5 (11/2008 ->) [8R] 73

AU-TC-7881

AUDI

A4 (2008 ->) [8K_] 43
A5 (06/2007 ->) [8T3, 8TA, 8F7] 47
Q5 (11/2008 ->) [8R] 73

AU-TC-7882

AUDI

A4 (2008 ->) [8K_] 43
A5 (06/2007 ->) [8T3, 8TA, 8F7] 47
Q5 (11/2008 ->) [8R] 73

AU-TC-7883

AUDI

A4 (2008 ->) [8K_] 43
A5 (06/2007 ->) [8T3, 8TA, 8F7] 47
Q5 (11/2008 ->) [8R] 73

AU-TC-7884

AUDI

A4 (2008 ->) [8K_] 43
A5 (06/2007 ->) [8T3, 8TA, 8F7] 47
Q5 (11/2008 ->) [8R] 73

AU-TC-7886

AUDI

Q7 (03/2006 -> 08/2015) [4L] 75

AU-TC-7887

AUDI

Q7 (03/2006 -> 08/2015) [4L] 75

AU-TC-7888

AUDI

Q7 (03/2006 -> 08/2015) [4L] 75

VW

Touareg I 1473

AU-TC-7917

AUDI

A4 (-> 11/2004) [8D, 8E, 8H, B5, B6] 35

SEAT

Exeo 1097

AU-TC-8081

AUDI

A4 (2008 ->) [8K_] 43
A5 (06/2007 ->) [8T3, 8TA, 8F7] 47

AU-TC-8082

AUDI

A4 (2008 ->) [8K_] 43
A5 (06/2007 ->) [8T3, 8TA, 8F7] 47

AU-TC-8200

AUDI

A6 (1994 -> 1997) [4A, C4] 51

AU-TC-8201

AUDI

A6 (1994 -> 1997) [4A, C4] 51

AU-TC-8239

AUDI

A8 (-> 09/2002) [4D2, 4D8] 63

AU-TC-8355

AUDI

Q7 (03/2006 -> 08/2015) [4L] 75

AU-TC-8356

AUDI

Q7 (03/2006 -> 08/2015) [4L] 75

AU-TC-8869

AUDI

A3 (-> 05/2003) [8L1] 25
A3 (05/2003 ->) [8P_] 29
TT (-> 08/2006) [8N3, 8N9] 77

VW

Golf IV 1415

AU-TC-8870

AUDI

A3 (-> 05/2003) [8L1] 25
A3 (05/2003 ->) [8P_] 29
TT (-> 08/2006) [8N3, 8N9] 77

VW

Golf IV 1415

AU-TC-8985

AUDI

Q7 (03/2006 -> 08/2015) [4L] 75

...AU-TC-8985

PORSCHE

Cayenne I 987

VW

Touareg I 1473
Touareg II 1475

AU-WP-3948

AUDI

A3 (05/2003 ->) [8P_] 29
TT (-> 08/2006) [8N3, 8N9] 77

VW

Golf IV 1415

AU-WP-3949

AUDI

A3 (05/2003 ->) [8P_] 29
TT (-> 08/2006) [8N3, 8N9] 77

VW

Golf IV 1415

BM-AX-0359

BMW

3 [E36] - Z3 93

BM-AX-10978

BMW

1 [F20, F21] 87
2 [F22, F23] 89
3 [F30, F31, F34] 105
4 [F32, F33, F36] 107

BM-AX-13425

BMW

X3 (II) [F25] - X4 [F26] 137

BM-AX-13875

BMW

1 [F20, F21] 87
2 [F22, F23] 89
3 [F30, F31, F34] 105
4 [F32, F33, F36] 107

BM-AX-14877

BMW

2 Active/Gran Tourer [F45, F46] 91

MINI

Mini (III) - Clubman [F5_] 761

BM-AX-14892

BMW

X5 (III) [F15] 143

BM-AX-15218

BMW

3 [E46] - Z4 97

BM-AX-1843

BMW

5 [E39] (not 535i, 540i & M5) 111

BM-AX-1877

MINI

Mini (I) [R50, R52, R53] 757

BM-AX-2426
BMW
X3 (I) [E83] 135
X5 (I) [E53] 139

BM-AX-2436
BMW
7 [E65, E66, E67] 129

BM-AX-3683
BMW
5 [E60, E61] 115
6 [E63, E64] 123

BM-AX-3730
BMW
1 [E81, E82, E87, E88] 83
3 [E90, E91, E92, E93] 101
X1 (I) [E84] 131

BM-AX-3731
BMW
1 [E81, E82, E87, E88] 83
3 [E90, E91, E92, E93] 101
X1 (I) [E84] 131

BM-AX-4342
BMW
3 [E36] - Z3 93
3 [E46] - Z4 97

BM-AX-5603
MINI
Mini (II) - Clubman [R55, R56, R57] 759

BM-AX-5622
BMW
X5 (II) [E70] - X6 [E71, E72] 141

BM-AX-8789
BMW
5 [F10, F11] 119
6 [F12, F13] 125

BM-AX-8885
BMW
3 [E90, E91, E92, E93] 101
X1 (I) [E84] 131

BM-BJ-0899
BMW
X5 (I) [E53] 139

BM-BJ-10455
BMW
5 [F10, F11] 119
6 [F12, F13] 125

BM-BJ-10485
MINI
Mini (II) - Clubman [R55, R56, R57] 759

BM-BJ-12620
BMW
5 [F10, F11] 119

...BM-BJ-12620
6 [F12, F13] 125

BM-BJ-13445
MINI
Mini Countryman [R60] 763

BM-BJ-13837
BMW
X3 (II) [F25] - X4 [F26] 137

BM-BJ-15221
BMW
3 [E46] - Z4 97

BM-BJ-15222
BMW
3 [E46] - Z4 97

BM-BJ-1880
MINI
Mini (I) [R50, R52, R53] 757

BM-BJ-1881
MINI
Mini (I) [R50, R52, R53] 757

BM-BJ-1882
MINI
Mini (I) [R50, R52, R53] 757

BM-BJ-3861
BMW
X3 (I) [E83] 135

BM-BJ-4345
BMW
3 [E36] - Z3 93

BM-BJ-4346
BMW
3 [E36] - Z3 93

BM-BJ-5604
MINI
Mini (II) - Clubman [R55, R56, R57] 759

BM-BJ-5605
MINI
Mini (II) - Clubman [R55, R56, R57] 759

BM-BJ-8777
BMW
X5 (II) [E70] - X6 [E71, E72] 141

BM-BJ-8826
BMW
X3 (I) [E83] 135

BM-DS-1788
BMW
3 [E46] - Z4 97

BM-DS-2114
BMW
X5 (I) [E53] 139

BM-DS-3583
BMW
3 [E46] - Z4 97

BM-DS-4339
BMW
3 [E36] - Z3 93

BM-DS-4340
BMW
3 [E36] - Z3 93

BM-DS-4343
BMW
3 [E36] - Z3 93

BM-DS-4349
BMW
7 [E38] 127

BM-DS-4354
BMW
5 [E39] (not 535i, 540i & M5) 111

BM-DS-4355
BMW
5 [E39] (not 535i, 540i & M5) 111

BM-DS-4358
BMW
5 [E39] (not 535i, 540i & M5) 111

BM-DS-4359
BMW
5 [E39] (not 535i, 540i & M5) 111

BM-DS-4364
BMW
7 [E38] 127

BM-DS-4365
BMW
7 [E38] 127

BM-ES-0490
BMW
3 [E46] - Z4 97

BM-ES-0491
BMW
3 [E46] - Z4 97

BM-ES-10441
BMW
5 [F10, F11] 119
6 [F12, F13] 125

BM-ES-10442
BMW
5 [F10, F11] 119
6 [F12, F13] 125

BM-ES-10979
BMW
1 [F20, F21] 87

...BM-ES-10979
2 [F22, F23] 89
3 [F30, F31, F34] 105
4 [F32, F33, F36] 107

BM-ES-10980
BMW
1 [F20, F21] 87
2 [F22, F23] 89
3 [F30, F31, F34] 105
4 [F32, F33, F36] 107

BM-ES-13420
BMW
X3 (II) [F25] - X4 [F26] 137

BM-ES-13441
MINI
Mini Countryman [R60] 763

BM-ES-13442
MINI
Mini Countryman [R60] 763

BM-ES-14065
BMW
1 [F20, F21] 87
2 [F22, F23] 89
3 [F30, F31, F34] 105
4 [F32, F33, F36] 107

BM-ES-14066
BMW
1 [F20, F21] 87
2 [F22, F23] 89
3 [F30, F31, F34] 105
4 [F32, F33, F36] 107

BM-ES-14787
MINI
Mini (III) - Clubman [F5_] 761

BM-ES-14788
MINI
Mini (III) - Clubman [F5_] 761

BM-ES-14893
BMW
X5 (III) [F15] 143

BM-ES-14894
BMW
X5 (III) [F15] 143

BM-ES-14905
MINI
Mini Countryman [R60] 763

BM-ES-14906
MINI
Mini Countryman [R60] 763

BM-ES-15219
BMW
3 [E46] - Z4 97

BM-ES-15220
BMW
3 [E46] - Z4 97

BM-ES-1871
MINI
Mini (I) [R50, R52, R53] 757

BM-ES-1874
MINI
Mini (I) [R50, R52, R53] 757

BM-ES-2113
BMW
X5 (I) [E53] 139

BM-ES-2439
BMW
5 [E60, E61] 115
6 [E63, E64] 123
7 [E65, E66, E67] 129

BM-ES-3728
BMW
1 [E81, E82, E87, E88] 83
3 [E90, E91, E92, E93] 101
X1 (I) [E84] 131

BM-ES-3729
BMW
1 [E81, E82, E87, E88] 83
3 [E90, E91, E92, E93] 101
X1 (I) [E84] 131

BM-ES-3857
BMW
X3 (I) [E83] 135

BM-ES-4270
BMW
5 [E39] 111
(not 535i, 540i & M5)

BM-ES-4279
BMW
5 [E39] 111
(not 535i, 540i & M5)

BM-ES-4341
BMW
3 [E36] - Z3 93

BM-ES-4344
BMW
3 [E36] - Z3 93

BM-ES-4350
BMW
7 [E38] 127

BM-ES-4351
BMW
7 [E38] 127

BM-ES-4374
BMW
5 [E39] (535i, 540i & M5) 109

BM-ES-4375
BMW
5 [E39] (535i, 540i & M5) 109

BM-ES-4876
BMW
X5 (I) [E53] 139

BM-ES-5601
MINI
Mini (II) - Clubman 759
[R55, R56, R57]

BM-ES-5602
MINI
Mini (II) - Clubman 759
[R55, R56, R57]

BM-ES-5621
BMW
X5 (II) [E70] - X6 141
[E71, E72]

BM-ES-6593
BMW
5 [E60, E61] 115

BM-ES-6983
MINI
Mini (I) [R50, R52, R53] 757

BM-ES-6986
MINI
Mini (I) [R50, R52, R53] 757

BM-ES-8883
BMW
1 [E81, E82, E87, E88] 83
3 [E90, E91, E92, E93] 101
X1 (I) [E84] 131

BM-ES-8884
BMW
1 [E81, E82, E87, E88] 83
3 [E90, E91, E92, E93] 101
X1 (I) [E84] 131

BM-LS-0420
BMW
5 [E39] (535i, 540i & M5) 109

BM-LS-0433
BMW
3 [E46] - Z4 97

BM-LS-0434
BMW
3 [E46] - Z4 97

BM-LS-0485
BMW
5 [E39] (535i, 540i & M5) 109
5 [E39] 111
(not 535i, 540i & M5)

BM-LS-10438
BMW
5 [F10, F11] 119

BM-LS-10919
BMW
1 [F20, F21] 87
3 [F30, F31, F34] 105
4 [F32, F33, F36] 107
X1 (I) [E84] 131

BM-LS-10920
BMW
1 [F20, F21] 87

...BM-LS-10920
3 [F30, F31, F34] 105
4 [F32, F33, F36] 107
X1 (I) [E84] 131

BM-LS-10981
BMW
1 [F20, F21] 87
2 [F22, F23] 89
3 [F30, F31, F34] 105
4 [F32, F33, F36] 107

BM-LS-10982
BMW
1 [F20, F21] 87
2 [F22, F23] 89
3 [F30, F31, F34] 105
4 [F32, F33, F36] 107

BM-LS-1151
BMW
3 [E36] - Z3 93

BM-LS-13423
BMW
X3 (II) [F25] - X4 [F26] 137

BM-LS-13424
BMW
X3 (II) [F25] - X4 [F26] 137

BM-LS-13449
MINI
Mini Countryman [R60] 763

BM-LS-13450
MINI
Mini Countryman [R60] 763

BM-LS-13493
BMW
5 [E60, E61] 115
6 [E63, E64] 123

BM-LS-13597
MINI
Mini Countryman [R60] 763

BM-LS-13598
MINI
Mini Countryman [R60] 763

BM-LS-13956
BMW
X3 (II) [F25] - X4 [F26] 137

BM-LS-14585
BMW
3 [E90, E91, E92, E93] 101
X1 (I) [E84] 131

BM-LS-14586
BMW
3 [E90, E91, E92, E93] 101
X1 (I) [E84] 131

BM-LS-14782
MINI
Mini (III) - Clubman [F5_] 761

BM-LS-14876
BMW
2 Active/Gran Tourer 91
[F45, F46]

BM-LS-14888
BMW
2 Active/Gran Tourer 91
[F45, F46]
MINI
Mini (III) - Clubman [F5_] 761

BM-LS-1787
BMW
3 [E36] - Z3 93

BM-LS-1886
MINI
Mini (I) [R50, R52, R53] 757

BM-LS-1887
MINI
Mini (I) [R50, R52, R53] 757
Mini (II) - Clubman 759
[R55, R56, R57]

BM-LS-1890
MINI
Mini (I) [R50, R52, R53] 757

BM-LS-2115
BMW
X5 (I) [E53] 139

BM-LS-2116
BMW
X5 (I) [E53] 139

BM-LS-2117
BMW
X5 (I) [E53] 139

BM-LS-2434
BMW
7 [E65, E66, E67] 129

BM-LS-2435
BMW
7 [E65, E66, E67] 129

BM-LS-3675
BMW
5 [E60, E61] 115

BM-LS-3676
BMW
5 [E60, E61] 115

BM-LS-3690
BMW
5 [E60, E61] 115
6 [E63, E64] 123

BM-LS-3725
BMW
1 [E81, E82, E87, E88] 83
3 [E90, E91, E92, E93] 101
X1 (I) [E84] 131

BM-LS-3727
BMW
1 [E81, E82, E87, E88] 83
3 [E90, E91, E92, E93] 101
X1 (I) [E84] 131

BM-LS-3743
BMW
1 [E81, E82, E87, E88] 83
3 [E90, E91, E92, E93] 101
X1 (I) [E84] 131

BM-LS-3858
BMW
X3 (I) [E83] 135

BM-LS-3859
BMW
X3 (I) [E83] 135

BM-LS-3860
BMW
X3 (I) [E83] 135

BM-LS-3967
BMW
7 [E65, E66, E67] 129

BM-LS-4195
BMW
3 [E46] - Z4 97

BM-LS-4196
BMW
3 [E46] - Z4 97

BM-LS-4311
BMW
3 [E36] - Z3 93

BM-LS-4429
BMW
6 [E63, E64] 123

BM-LS-4430
BMW
6 [E63, E64] 123

BM-LS-5198
BMW
3 [E36] - Z3 93

BM-LS-5609
MINI
Mini (II) - Clubman [R55, R56, R57] 759

BM-LS-7313
BMW
X5 (II) [E70] - X6 [E71, E72] 141

BM-LS-7314
BMW
X5 (II) [E70] - X6 [E71, E72] 141
X5 (III) [F15] 143

BM-LS-7315
BMW
X5 (II) [E70] - X6 [E71, E72] 141

...BM-LS-7315
X5 (III) [F15] 143

BM-LS-7343
BMW
X5 (II) [E70] - X6 [E71, E72] 141
X5 (III) [F15] 143

BM-LS-7344
BMW
X5 (II) [E70] - X6 [E71, E72] 141
X5 (III) [F15] 143

BM-LS-8768
BMW
5 [E60, E61] 115

BM-LS-8769
BMW
5 [E60, E61] 115

BM-LS-8774
BMW
7 [E65, E66, E67] 129

BM-LS-8778
BMW
3 [E46] - Z4 97

BM-LS-8806
BMW
5 [F10, F11] 119
6 [F12, F13] 125

BM-LS-8845
BMW
5 [F10, F11] 119
6 [F12, F13] 125

BM-LS-8846
BMW
5 [F10, F11] 119
6 [F12, F13] 125

BM-RK-15011
BMW
5 [E39] (not 535i, 540i & M5) 111

BM-RK-15012
BMW
3 [E36] - Z3 93
3 [E46] - Z4 97

BM-RK-15034
BMW
3 [E36] - Z3 93
3 [E46] - Z4 97

BM-RK-15036
BMW
3 [E46] - Z4 97

BM-RK-15037
BMW
3 [E46] - Z4 97

BM-RK-15072
BMW
1 [E81, E82, E87, E88] 83
3 [E90, E91, E92, E93] 101

BM-RK-15076
BMW
1 [E81, E82, E87, E88] 83
3 [E90, E91, E92, E93] 101

BM-RK-6607
BMW
5 [E39] (not 535i, 540i & M5) 111

BM-RK-6608
BMW
5 [E39] (535i, 540i & M5) 109
5 [E39] (not 535i, 540i & M5) 111

BM-RK-6609
BMW
X5 (I) [E53] 139

BM-RK-6610
BMW
X5 (I) [E53] 139

BM-RK-6616
BMW
5 [E60, E61] 115

BM-RK-6617
BMW
5 [E60, E61] 115

BM-RK-6618
BMW
X3 (I) [E83] 135

BM-RK-8951
BMW
1 [E81, E82, E87, E88] 83
3 [E90, E91, E92, E93] 101
X1 (I) [E84] 131

BM-RK-8974
BMW
1 [E81, E82, E87, E88] 83
3 [E90, E91, E92, E93] 101
X1 (I) [E84] 131

BM-SB-0353
BMW
3 [E46] - Z4 97

BM-SB-10456
BMW
5 [F10, F11] 119

BM-SB-10457
BMW
5 [F10, F11] 119

BM-SB-10461
BMW
5 [F10, F11] 119

BM-SB-10462
BMW
5 [F10, F11] 119
6 [F12, F13] 125

BM-SB-10463
BMW
5 [F10, F11] 119
6 [F12, F13] 125

BM-SB-10467
BMW
5 [F10, F11] 119
6 [F12, F13] 125

BM-SB-10728
BMW
5 [E39] (535i, 540i & M5) 109
5 [E39] (not 535i, 540i & M5) 111

BM-SB-10783
BMW
5 [E60, E61] 115
6 [E63, E64] 123

BM-SB-10915
BMW
5 [F10, F11] 119
6 [F12, F13] 125

BM-SB-10916
BMW
5 [F10, F11] 119
6 [F12, F13] 125

BM-SB-10958
BMW
X3 (I) [E83] 135

BM-SB-10959
BMW
X5 (II) [E70] - X6 [E71, E72] 141

BM-SB-10960
MINI
Mini (I) [R50, R52, R53] 757

BM-SB-10961
BMW
7 [E65, E66, E67] 129

BM-SB-10983
BMW
1 [F20, F21] 87
2 [F22, F23] 89
3 [F30, F31, F34] 105
4 [F32, F33, F36] 107

BM-SB-10984
BMW
1 [F20, F21] 87
2 [F22, F23] 89
3 [F30, F31, F34] 105
4 [F32, F33, F36] 107

BM-SB-10992
BMW
1 [F20, F21] 87

...BM-SB-10992
2 [F22, F23] 89
3 [F30, F31, F34] 105
4 [F32, F33, F36] 107

BM-SB-10994
BMW
1 [F20, F21] 87
2 [F22, F23] 89
2 Active/Gran Tourer [F45, F46] 91
3 [F30, F31, F34] 105
4 [F32, F33, F36] 107

BM-SB-10996
BMW
1 [F20, F21] 87
2 [F22, F23] 89
2 Active/Gran Tourer [F45, F46] 91
3 [F30, F31, F34] 105
4 [F32, F33, F36] 107

BM-SB-10997
BMW
1 [F20, F21] 87
2 [F22, F23] 89
2 Active/Gran Tourer [F45, F46] 91
3 [F30, F31, F34] 105
4 [F32, F33, F36] 107

BM-SB-1128
BMW
3 [E36] - Z3 93

BM-SB-12540
MINI
Mini (II) - Clubman [R55, R56, R57] 759
Mini Countryman [R60] 763

BM-SB-12541
MINI
Mini (II) - Clubman [R55, R56, R57] 759
Mini Countryman [R60] 763

BM-SB-12543
MINI
Mini (I) [R50, R52, R53] 757
Mini (II) - Clubman [R55, R56, R57] 759
Mini Countryman [R60] 763

BM-SB-12599
MINI
Mini (II) - Clubman [R55, R56, R57] 759

BM-SB-12600
MINI
Mini (II) - Clubman [R55, R56, R57] 759

BM-SB-13252
BMW
5 [F10, F11] 119

...BM-SB-13252
6 [F12, F13] 125

BM-SB-13380
BMW
X3 (II) [F25] - X4 [F26] 137

BM-SB-13382
MINI
Mini (I) [R50, R52, R53] 757

BM-SB-13383
MINI
Mini (I) [R50, R52, R53] 757

BM-SB-13384
MINI
Mini (II) - Clubman [R55, R56, R57] 759

BM-SB-13385
MINI
Mini (II) - Clubman [R55, R56, R57] 759

BM-SB-13400
BMW
X3 (I) [E83] 135

BM-SB-13426
BMW
X3 (II) [F25] - X4 [F26] 137

BM-SB-13431
BMW
3 [E46] - Z4 97

BM-SB-13432
BMW
3 [E46] - Z4 97

BM-SB-13446
MINI
Mini Countryman [R60] 763

BM-SB-13447
MINI
Mini Countryman [R60] 763

BM-SB-13448
MINI
Mini Countryman [R60] 763

BM-SB-13489
BMW
1 [E81, E82, E87, E88] 83
3 [E90, E91, E92, E93] 101
X1 (I) [E84] 131
X3 (I) [E83] 135

BM-SB-13490
BMW
3 [E46] - Z4 97

BM-SB-13491
BMW
3 [E46] - Z4 97

BM-SB-13492
BMW
3 [E90, E91, E92, E93] 101

...BM-SB-13492
X1 (I) [E84] 131

BM-SB-13494
BMW
X5 (I) [E53] 139

BM-SB-13495
BMW
3 [E46] - Z4 97

BM-SB-13508
BMW
5 [E60, E61] 115
6 [E63, E64] 123

BM-SB-13688
BMW
3 [E90, E91, E92, E93] 101
X1 (I) [E84] 131

BM-SB-13722
BMW
5 [F10, F11] 119
6 [F12, F13] 125

BM-SB-13723
BMW
5 [F10, F11] 119
6 [F12, F13] 125

BM-SB-13951
BMW
X5 (II) [E70] - X6 [E71, E72] 141

BM-SB-13952
BMW
X5 (II) [E70] - X6 [E71, E72] 141

BM-SB-13966
BMW
X3 (II) [F25] - X4 [F26] 137

BM-SB-14569
BMW
1 [F20, F21] 87
2 [F22, F23] 89
3 [F30, F31, F34] 105
4 [F32, F33, F36] 107

BM-SB-14582
BMW
3 [E90, E91, E92, E93] 101
X1 (I) [E84] 131

BM-SB-14599
BMW
5 [F10, F11] 119
6 [F12, F13] 125

BM-SB-14609
BMW
X3 (I) [E83] 135

BM-SB-14610
BMW
X5 (I) [E53] 139

BM-SB-14611
BMW
X5 (II) [E70] - X6 [E71, E72] 141

BM-SB-14613
BMW
3 [E46] - Z4 97

BM-SB-14614
BMW
3 [E46] - Z4 97

BM-SB-14615
BMW
3 [E36] - Z3 93
3 [E46] - Z4 97

BM-SB-14636
BMW
X3 (II) [F25] - X4 [F26] 137

BM-SB-14665
BMW
X3 (II) [F25] - X4 [F26] 137

BM-SB-14666
BMW
X3 (II) [F25] - X4 [F26] 137

BM-SB-14873
BMW
1 [F20, F21] 87
2 [F22, F23] 89
3 [F30, F31, F34] 105
4 [F32, F33, F36] 107

BM-SB-14878
BMW
2 Active/Gran Tourer [F45, F46] 91
MINI
Mini (III) - Clubman [F5_] 761

BM-SB-14968
BMW
1 [F20, F21] 87
2 [F22, F23] 89
3 [F30, F31, F34] 105
4 [F32, F33, F36] 107

BM-SB-14970
BMW
1 [F20, F21] 87
2 [F22, F23] 89
3 [F30, F31, F34] 105
4 [F32, F33, F36] 107

BM-SB-14989
BMW
1 [F20, F21] 87
2 [F22, F23] 89
2 Active/Gran Tourer [F45, F46] 91
3 [F30, F31, F34] 105
4 [F32, F33, F36] 107

BM-SB-14999
BMW
X3 (II) [F25] - X4 [F26] 137

BM-SB-15100

BMW
1 [F20, F21] 87
2 [F22, F23] 89
3 [F30, F31, F34] 105
4 [F32, F33, F36] 107

BM-SB-15106

BMW
5 [F10, F11] 119

BM-SB-15109

BMW
5 [F10, F11] 119

BM-SB-15245

BMW
1 [E81, E82, E87, E88] 83
3 [E90, E91, E92, E93] 101

BM-SB-15246

BMW
1 [E81, E82, E87, E88] 83
3 [E90, E91, E92, E93] 101
5 [E60, E61] 115
6 [E63, E64] 123

BM-SB-1591

BMW
X3 (I) [E83] 135
X5 (I) [E53] 139

BM-SB-2200

BMW
5 [E39] (535i, 540i & M5) 109
5 [E39] (not 535i, 540i & M5) 111
7 [E38] 127

BM-SB-2201

BMW
5 [E39] (535i, 540i & M5) 109
5 [E39] (not 535i, 540i & M5) 111

BM-SB-2202

BMW
3 [E46] - Z4 97

BM-SB-2213

BMW
5 [E39] (not 535i, 540i & M5) 111

BM-SB-2232

BMW
3 [E46] - Z4 97

BM-SB-2427

BMW
X5 (I) [E53] 139

BM-SB-2429

BMW
X5 (I) [E53] 139

BM-SB-2433

BMW
5 [E39] (535i, 540i & M5) 109

BM-SB-2760

MINI
Mini (I) [R50, R52, R53] 757

BM-SB-3614

BMW
7 [E38] 127

BM-SB-3678

BMW
5 [E60, E61] 115
6 [E63, E64] 123
7 [E65, E66, E67] 129

BM-SB-3689

BMW
5 [E60, E61] 115
6 [E63, E64] 123

BM-SB-3694

BMW
5 [E39] (535i, 540i & M5) 109
5 [E39] (not 535i, 540i & M5) 111
5 [E60, E61] 115
6 [E63, E64] 123
7 [E38] 127
7 [E65, E66, E67] 129
X5 (I) [E53] 139

BM-SB-3695

BMW
5 [E60, E61] 115
6 [E63, E64] 123

BM-SB-3724

BMW
1 [E81, E82, E87, E88] 83
3 [E90, E91, E92, E93] 101

BM-SB-3734

BMW
1 [E81, E82, E87, E88] 83
3 [E90, E91, E92, E93] 101
X1 (I) [E84] 131

BM-SB-3737

BMW
1 [E81, E82, E87, E88] 83
3 [E90, E91, E92, E93] 101
X1 (I) [E84] 131

BM-SB-3966

BMW
3 [E36] - Z3 93

BM-SB-3978

BMW
3 [E36] - Z3 93
3 [E46] - Z4 97
X3 (I) [E83] 135

BM-SB-4412

BMW
X3 (I) [E83] 135

BM-SB-4453

BMW
3 [E36] - Z3 93

BM-SB-4477

BMW
5 [E39] (535i, 540i & M5) 109
7 [E38] 127

BM-SB-4483

BMW
3 [E36] - Z3 93
3 [E46] - Z4 97
X3 (I) [E83] 135

BM-SB-4495

BMW
3 [E36] - Z3 93
3 [E46] - Z4 97
X3 (I) [E83] 135

BM-SB-4510

BMW
5 [E39] (535i, 540i & M5) 109
5 [E39] (not 535i, 540i & M5) 111

BM-SB-4521

BMW
3 [E46] - Z4 97

BM-SB-4522

BMW
3 [E46] - Z4 97

BM-SB-4524

BMW
3 [E46] - Z4 97
X3 (I) [E83] 135

BM-SB-4534

BMW
3 [E46] - Z4 97
X3 (I) [E83] 135

BM-SB-4842

BMW
3 [E36] - Z3 93
3 [E46] - Z4 97

BM-SB-5013

BMW
3 [E36] - Z3 93

BM-SB-5014

BMW
3 [E36] - Z3 93

BM-SB-5608

MINI
Mini (II) - Clubman [R55, R56, R57] 759

BM-SB-5625

BMW
1 [E81, E82, E87, E88] 83
3 [E90, E91, E92, E93] 101
X1 (I) [E84] 131

BM-SB-5645

BMW
5 [E60, E61] 115

...BM-SB-5645

6 [E63, E64] 123

BM-SB-6709

BMW
3 [E36] - Z3 93

BM-SB-6738

BMW
3 [E36] - Z3 93

BM-SB-6752

BMW
3 [E36] - Z3 93

BM-SB-6753

BMW
3 [E36] - Z3 93

BM-SB-6754

BMW
3 [E36] - Z3 93

BM-SB-6756

BMW
3 [E36] - Z3 93

BM-SB-6757

BMW
3 [E46] - Z4 97

BM-SB-6759

BMW
5 [E39] (535i, 540i & M5) 109
5 [E39] (not 535i, 540i & M5) 111

BM-SB-6760

BMW
5 [E39] (535i, 540i & M5) 109
5 [E39] (not 535i, 540i & M5) 111

BM-SB-6762

BMW
3 [E36] - Z3 93
3 [E46] - Z4 97

BM-SB-6804

BMW
3 [E46] - Z4 97

BM-SB-6855

BMW
1 [E81, E82, E87, E88] 83
3 [E90, E91, E92, E93] 101

BM-SB-6856

BMW
1 [E81, E82, E87, E88] 83

BM-SB-7210

BMW
X5 (I) [E53] 139

BM-SB-7216

MINI
Mini (I) [R50, R52, R53] 757

BM-SB-7217
MINI
Mini (I) [R50, R52, R53] 757

BM-SB-7391
MINI
Mini (I) [R50, R52, R53] 757

BM-SB-7392
MINI
Mini (I) [R50, R52, R53] 757

BM-SB-7401
BMW
X5 (II) [E70] - X6 [E71, E72] 141
X5 (III) [F15] 143

BM-SB-7402
BMW
X5 (II) [E70] - X6 [E71, E72] 141

BM-SB-7406
BMW
X5 (II) [E70] - X6 [E71, E72] 141

BM-SB-7445
BMW
1 [E81, E82, E87, E88] 83
3 [E90, E91, E92, E93] 101
X1 (I) [E84] 131

BM-SB-7885
BMW
1 [E81, E82, E87, E88] 83
X1 (I) [E84] 131

BM-SB-7913
BMW
5 [E39] (535i, 540i & M5) 109
5 [E39] (not 535i, 540i & M5) 111

BM-SB-7946
BMW
X5 (I) [E53] 139

BM-SB-7948
BMW
5 [E39] (535i, 540i & M5) 109
5 [E39] (not 535i, 540i & M5) 111

BM-SB-8046
BMW
X3 (I) [E83] 135

BM-SB-8108
BMW
5 [E39] (535i, 540i & M5) 109
5 [E39] (not 535i, 540i & M5) 111
7 [E38] 127
7 [E65, E66, E67] 129

BM-SB-8109
BMW
5 [E39] (535i, 540i & M5) 109

...BM-SB-8109
5 [E39] (not 535i, 540i & M5) 111
5 [E60, E61] 115
6 [E63, E64] 123
7 [E38] 127
7 [E65, E66, E67] 129

BM-SB-8339
BMW
3 [E36] - Z3 93
3 [E46] - Z4 97
X3 (I) [E83] 135

BM-SB-8752
BMW
1 [E81, E82, E87, E88] 83
3 [E90, E91, E92, E93] 101
X1 (I) [E84] 131

BM-SB-8753
BMW
1 [E81, E82, E87, E88] 83
3 [E90, E91, E92, E93] 101
X1 (I) [E84] 131

BM-SB-8754
BMW
1 [E81, E82, E87, E88] 83
3 [E90, E91, E92, E93] 101

BM-SB-8755
BMW
1 [E81, E82, E87, E88] 83
3 [E90, E91, E92, E93] 101

BM-SB-8757
BMW
3 [E36] - Z3 93

BM-SB-8773
BMW
7 [E65, E66, E67] 129

BM-SB-8776
BMW
X5 (II) [E70] - X6 [E71, E72] 141

BM-SB-8863
BMW
3 [E46] - Z4 97

BM-SB-8864
BMW
3 [E46] - Z4 97

BM-SB-8981
BMW
1 [E81, E82, E87, E88] 83
3 [E90, E91, E92, E93] 101

BM-SB-9525
BMW
5 [E39] (535i, 540i & M5) 109
5 [E39] (not 535i, 540i & M5) 111

...BM-SB-9525
7 [E38] 127

BM-SB-9529
BMW
5 [E39] (535i, 540i & M5) 109
5 [E39] (not 535i, 540i & M5) 111

BM-SB-9531
MINI
Mini (I) [R50, R52, R53] 757

BM-SB-9533
MINI
Mini (I) [R50, R52, R53] 757
Mini (II) - Clubman [R55, R56, R57] 759

BM-SB-9546
BMW
X5 (I) [E53] 139

BM-SB-9548
BMW
3 [E46] - Z4 97

BM-SB-9550
BMW
7 [E38] 127

BM-SB-9554
BMW
X5 (I) [E53] 139

BM-SB-9556
BMW
3 [E36] - Z3 93

BM-SB-9562
BMW
3 [E36] - Z3 93
3 [E46] - Z4 97

BM-SB-9564
BMW
3 [E36] - Z3 93

BM-SB-9565
BMW
3 [E36] - Z3 93

BM-SB-9566
BMW
3 [E36] - Z3 93

BM-SB-9571
BMW
1 [E81, E82, E87, E88] 83
3 [E46] - Z4 97
3 [E90, E91, E92, E93] 101
5 [E39] (not 535i, 540i & M5) 111
5 [E60, E61] 115
6 [E63, E64] 123
X3 (I) [E83] 135

BM-SB-9573
BMW
5 [E39] (535i, 540i & M5) 109

...BM-SB-9573
5 [E39] (not 535i, 540i & M5) 111

BM-TC-0448
BMW
5 [E39] (535i, 540i & M5) 109
5 [E39] (not 535i, 540i & M5) 111

BM-TC-0449
BMW
5 [E39] (535i, 540i & M5) 109
5 [E39] (not 535i, 540i & M5) 111

BM-TC-0476
BMW
5 [E39] (not 535i, 540i & M5) 111

BM-TC-0477
BMW
5 [E39] (not 535i, 540i & M5) 111

BM-TC-0486
BMW
5 [E39] (535i, 540i & M5) 109
5 [E39] (not 535i, 540i & M5) 111
7 [E38] 127

BM-TC-0897
BMW
X5 (I) [E53] 139

BM-TC-0898
BMW
X5 (I) [E53] 139

BM-TC-0918
BMW
X5 (I) [E53] 139

BM-TC-0920
BMW
X5 (I) [E53] 139

BM-TC-0923
BMW
5 [E39] (535i, 540i & M5) 109

BM-TC-0924
BMW
5 [E39] (535i, 540i & M5) 109

BM-TC-0928
BMW
5 [E39] (535i, 540i & M5) 109
5 [E39] (not 535i, 540i & M5) 111
5 [E60, E61] 115
6 [E63, E64] 123
7 [E38] 127
7 [E65, E66, E67] 129

BM-TC-10460
BMW
5 [F10, F11] 119

...BM-TC-10460
6 [F12, F13] 125

BM-TC-10464
BMW
5 [F10, F11] 119

BM-TC-10465
BMW
5 [F10, F11] 119
6 [F12, F13] 125

BM-TC-10466
BMW
5 [F10, F11] 119
6 [F12, F13] 125

BM-TC-10487
BMW
X5 (II) [E70] - X6 [E71, E72] 141

BM-TC-10488
BMW
X5 (II) [E70] - X6 [E71, E72] 141

BM-TC-10489
BMW
X5 (II) [E70] - X6 [E71, E72] 141

BM-TC-10490
BMW
X5 (II) [E70] - X6 [E71, E72] 141

BM-TC-10491
BMW
X5 (II) [E70] - X6 [E71, E72] 141
X5 (III) [F15] 143

BM-TC-10913
BMW
5 [F10, F11] 119
6 [F12, F13] 125

BM-TC-10914
BMW
5 [F10, F11] 119
6 [F12, F13] 125

BM-TC-10917
BMW
5 [F10, F11] 119
6 [F12, F13] 125

BM-TC-10918
BMW
5 [F10, F11] 119
6 [F12, F13] 125

BM-TC-10921
BMW
1 [F20, F21] 87
2 [F22, F23] 89
3 [F30, F31, F34] 105

...BM-TC-10921
4 [F32, F33, F36] 107

BM-TC-10922
BMW
1 [F20, F21] 87
2 [F22, F23] 89
3 [F30, F31, F34] 105
4 [F32, F33, F36] 107

BM-TC-10923
BMW
1 [F20, F21] 87
2 [F22, F23] 89
3 [F30, F31, F34] 105
4 [F32, F33, F36] 107

BM-TC-10924
BMW
1 [F20, F21] 87
2 [F22, F23] 89
3 [F30, F31, F34] 105
4 [F32, F33, F36] 107

BM-TC-10985
BMW
1 [F20, F21] 87
2 [F22, F23] 89
3 [F30, F31, F34] 105
4 [F32, F33, F36] 107

BM-TC-10986
BMW
1 [F20, F21] 87
2 [F22, F23] 89
3 [F30, F31, F34] 105
4 [F32, F33, F36] 107

BM-TC-10987
BMW
1 [F20, F21] 87
2 [F22, F23] 89
3 [F30, F31, F34] 105
4 [F32, F33, F36] 107

BM-TC-10988
BMW
1 [F20, F21] 87
2 [F22, F23] 89
3 [F30, F31, F34] 105
4 [F32, F33, F36] 107

BM-TC-12542
MINI
Mini (I) [R50, R52, R53] 757
Mini (II) - Clubman [R55, R56, R57] 759
Mini Countryman [R60] 763

BM-TC-12649
BMW
5 [F10, F11] 119

BM-TC-12650
BMW
5 [F10, F11] 119

BM-TC-13339
BMW
X3 (II) [F25] - X4 [F26] 137

BM-TC-13340
BMW
X3 (II) [F25] - X4 [F26] 137

BM-TC-13421
BMW
X3 (II) [F25] - X4 [F26] 137

BM-TC-13422
BMW
X3 (II) [F25] - X4 [F26] 137

BM-TC-13427
BMW
5 [F10, F11] 119

BM-TC-13458
BMW
5 [F10, F11] 119

BM-TC-13459
BMW
5 [F10, F11] 119

BM-TC-13539
BMW
5 [F10, F11] 119

BM-TC-13540
BMW
5 [F10, F11] 119

BM-TC-13584
BMW
5 [F10, F11] 119

BM-TC-13585
BMW
5 [F10, F11] 119

BM-TC-13586
BMW
5 [F10, F11] 119

BM-TC-13687
BMW
3 [E90, E91, E92, E93] 101
X1 (I) [E84] 131

BM-TC-13747
BMW
X1 (I) [E84] 131

BM-TC-13957
BMW
5 [F10, F11] 119
6 [F12, F13] 125

BM-TC-13958
BMW
5 [F10, F11] 119
6 [F12, F13] 125

BM-TC-14067
BMW
1 [F20, F21] 87

...BM-TC-14067
2 [F22, F23] 89
3 [F30, F31, F34] 105
4 [F32, F33, F36] 107

BM-TC-14068
BMW
1 [F20, F21] 87
2 [F22, F23] 89
3 [F30, F31, F34] 105
4 [F32, F33, F36] 107

BM-TC-14531
BMW
3 [E90, E91, E92, E93] 101
X1 (I) [E84] 131

BM-TC-14532
BMW
3 [E90, E91, E92, E93] 101
X1 (I) [E84] 131

BM-TC-14583
BMW
5 [F10, F11] 119
6 [F12, F13] 125

BM-TC-14584
BMW
5 [F10, F11] 119
6 [F12, F13] 125

BM-TC-14634
BMW
X3 (II) [F25] - X4 [F26] 137

BM-TC-14635
BMW
X3 (II) [F25] - X4 [F26] 137

BM-TC-14660
BMW
X3 (II) [F25] - X4 [F26] 137

BM-TC-14899
BMW
X5 (III) [F15] 143

BM-TC-14900
BMW
X5 (III) [F15] 143

BM-TC-14987
BMW
5 [E60, E61] 115

BM-TC-14988
BMW
5 [E60, E61] 115

BM-TC-1752
BMW
7 [E38] 127

BM-TC-2118
BMW
X5 (I) [E53] 139

BM-TC-2122
BMW
X5 (I) [E53] 139

BM-TC-2125
BMW
X5 (I) [E53] 139

BM-TC-3152
BMW
7 [E38] 127

BM-TC-3684
BMW
5 [E60, E61] 115

BM-TC-3685
BMW
5 [E60, E61] 115

BM-TC-3686
BMW
5 [E60, E61] 115

BM-TC-3687
BMW
5 [E60, E61] 115

BM-TC-3691
BMW
5 [E39] (535i, 540i & M5) 109
5 [E39] (not 535i, 540i & M5) 111
5 [E60, E61] 115
7 [E65, E66, E67] 129

BM-TC-3692
BMW
5 [E60, E61] 115
6 [E63, E64] 123
7 [E65, E66, E67] 129

BM-TC-3693
BMW
5 [E60, E61] 115
6 [E63, E64] 123
7 [E65, E66, E67] 129

BM-TC-3732
BMW
1 [E81, E82, E87, E88] 83
3 [E90, E91, E92, E93] 101
X1 (I) [E84] 131

BM-TC-3733
BMW
1 [E81, E82, E87, E88] 83
3 [E90, E91, E92, E93] 101
X1 (I) [E84] 131

BM-TC-3738
BMW
1 [E81, E82, E87, E88] 83
3 [E90, E91, E92, E93] 101
X1 (I) [E84] 131

BM-TC-3739
BMW
1 [E81, E82, E87, E88] 83

...BM-TC-3739
3 [E90, E91, E92, E93] 101
X1 (I) [E84] 131

BM-TC-3740
BMW
1 [E81, E82, E87, E88] 83
3 [E90, E91, E92, E93] 101
X1 (I) [E84] 131

BM-TC-3741
BMW
1 [E81, E82, E87, E88] 83
3 [E90, E91, E92, E93] 101
X1 (I) [E84] 131

BM-TC-3742
BMW
1 [E81, E82, E87, E88] 83
3 [E90, E91, E92, E93] 101
X1 (I) [E84] 131

BM-TC-3855
BMW
X3 (I) [E83] 135

BM-TC-3856
BMW
X3 (I) [E83] 135

BM-TC-3862
BMW
X3 (I) [E83] 135

BM-TC-3863
BMW
X3 (I) [E83] 135

BM-TC-3936
BMW
3 [E36] - Z3 93
3 [E46] - Z4 97
X3 (I) [E83] 135

BM-TC-4356
BMW
5 [E39] (not 535i, 540i & M5) 111

BM-TC-4357
BMW
5 [E39] (not 535i, 540i & M5) 111

BM-TC-4360
BMW
7 [E38] 127

BM-TC-4361
BMW
7 [E38] 127

BM-TC-4362
BMW
7 [E38] 127

BM-TC-4363
BMW
7 [E38] 127

BM-TC-4368
BMW
3 [E36] - Z3 93

BM-TC-4369
BMW
3 [E36] - Z3 93

BM-TC-5164
BMW
3 [E46] - Z4 97

BM-TC-5165
BMW
3 [E46] - Z4 97

BM-TC-5631
BMW
6 [E63, E64] 123

BM-TC-5632
BMW
6 [E63, E64] 123

BM-TC-7389
BMW
X5 (II) [E70] - X6 [E71, E72] 141

BM-TC-7390
BMW
X5 (II) [E70] - X6 [E71, E72] 141

BM-TC-7398
BMW
X5 (II) [E70] - X6 [E71, E72] 141

BM-TC-7399
BMW
X5 (II) [E70] - X6 [E71, E72] 141

BM-TC-8843
BMW
X5 (II) [E70] - X6 [E71, E72] 141

BM-TC-8844
BMW
X5 (II) [E70] - X6 [E71, E72] 141

BM-WP-1883
MINI
Mini (I) [R50, R52, R53] 757

BM-WP-1885
MINI
Mini (I) [R50, R52, R53] 757

BM-WP-2430
BMW
5 [E39] (535i, 540i & M5) 109

BM-WP-2431
BMW
5 [E39] (535i, 540i & M5) 109

BM-WP-2437
BMW
6 [E63, E64] 123
7 [E65, E66, E67] 129

BM-WP-2438
BMW
6 [E63, E64] 123
7 [E65, E66, E67] 129

BM-WP-2443
BMW
7 [E65, E66, E67] 129

BM-WP-2444
BMW
7 [E65, E66, E67] 129

BM-WP-4738
BMW
3 [E46] - Z4 97

BM-WP-4739
BMW
3 [E46] - Z4 97

BM-WP-5606
MINI
Mini (II) - Clubman [R55, R56, R57] 759

BM-WP-5607
MINI
Mini (II) - Clubman [R55, R56, R57] 759

BM-WP-8861
BMW
3 [E46] - Z4 97

BM-WP-8862
BMW
3 [E46] - Z4 97

CH-AX-0314
CHRYSLER
Neon I (-> 08/1999) [PL] 169

CH-BJ-0315
CHRYSLER
Neon I (-> 08/1999) [PL] 169

CH-BJ-10520
JEEP
Grand Cherokee III (06/2005 ->) [WH, WK] 521

CH-BJ-15434
CHRYSLER
Voyager III [GS] 173
Voyager IV [RG, RS] 175

CH-ES-0313
CHRYSLER
Neon I (-> 08/1999) [PL] 169
PT Cruiser 171

CH-ES-10748
CHRYSLER
Grand Voyager V [RT] 167

CH-ES-15604
CHRYSLER
Voyager III [GS] 173

CH-ES-7921
JEEP
Wrangler II (08/1996 -> 04/2007) [TJ] 525

CH-ES-8353
JEEP
Grand Cherokee III (06/2005 ->) [WH, WK] 521

CH-ES-8354
JEEP
Grand Cherokee III (06/2005 ->) [WH, WK] 521

CH-LS-10521
JEEP
Grand Cherokee III (06/2005 ->) [WH, WK] 521

CH-LS-10579
CHRYSLER
PT Cruiser 171

CH-LS-10691
CHRYSLER
Grand Voyager V [RT] 167
Voyager IV [RG, RS] 175

CH-LS-13707
JEEP
Grand Cherokee II (04/1999->) [WJ, WG] 519

CH-SB-10807
CHRYSLER
PT Cruiser 171

CH-SB-10808
CHRYSLER
PT Cruiser 171

CH-SB-13391
JEEP
Grand Cherokee III (06/2005 ->) [WH, WK] 521

CH-SB-13392
JEEP
Grand Cherokee III (06/2005 ->) [WH, WK] 521

CH-SB-13393
JEEP
Grand Cherokee III (06/2005 ->) [WH, WK] 521

CH-SB-13395
JEEP
Grand Cherokee III (06/2005 ->) [WH, WK] 521

CH-SB-14074
CHRYSLER
Grand Voyager V [RT] 167

CH-SB-14092
MERCEDES-BENZ
GL-Class [166] 713
M-Class [166] 721

CH-SB-2446
CHRYSLER
Voyager III [GS] 173

CH-SB-2448
CHRYSLER
Voyager III [GS] 173

CH-SB-2452
CHRYSLER
Voyager IV [RG, RS] 175

CH-SB-2453
CHRYSLER
Voyager IV [RG, RS] 175

CH-SB-2456
CHRYSLER
PT Cruiser 171

CH-SB-2457
CHRYSLER
PT Cruiser 171

CH-SB-9583
CHRYSLER
Voyager III [GS] 173
Voyager IV [RG, RS] 175

CH-SB-9588
JEEP
Cherokee II [KJ] 517

CH-SB-9590
JEEP
Cherokee II [KJ] 517

CH-SB-9594
JEEP
Grand Cherokee III (06/2005 ->) [WH, WK] 521

CH-TC-13351
JEEP
Grand Cherokee II (04/1999->) [WJ, WG] 519

CH-TC-13389
JEEP
Grand Cherokee III (06/2005 ->) [WH, WK] 521

CH-TC-13390
JEEP
Grand Cherokee III (06/2005 ->) [WH, WK] 521

CH-TC-13394
JEEP
Grand Cherokee III (06/2005 ->) [WH, WK] 521

CH-WP-2445
CHRYSLER
Voyager III [GS] 173

CH-WP-2447
CHRYSLER
Voyager III [GS] 173

CH-WP-2449
CHRYSLER
Voyager IV [RG, RS] 175

CH-WP-2450
CHRYSLER
Voyager IV [RG, RS] 175

CH-WP-2458
CHRYSLER
PT Cruiser 171

CH-WP-2459
CHRYSLER
PT Cruiser 171

CH-WP-3298
CHRYSLER
Neon I (-> 08/1999) [PL] 169

CH-WP-3299
CHRYSLER
Neon I (-> 08/1999) [PL] 169

CI-AX-0537
CITROËN
Saxo 229
PEUGEOT
106 921

CI-AX-0863
CITROËN
C5 199

CI-AX-13643
CITROËN
C-ELYSEE 209
PEUGEOT
301 933

CI-AX-14830
CITROËN
C4 Picasso II / Grand Picasso II (02/2013 ->) 197

CI-AX-1707
CITROËN
Berlingo I (07/1996 ->) 177
Xsara Picasso 239
PEUGEOT
Partner I - Ranch 979

CI-AX-2467
CITROËN
C8 205
FIAT
Ulysse II (08/2002 ->) 353
LANCIA
Phedra 593
PEUGEOT
807 955

CI-AX-3361
CITROËN
Berlingo I (07/1996 ->) 177

...CI-AX-3361
Xsara 237
ZX 241
PEUGEOT
Partner I - Ranch 979

CI-AX-3991
CITROËN
C4 I (11/2004 ->) [LA, LC] 191
PEUGEOT
307 937

CI-AX-5060
CITROËN
C1 (06/2005 ->) [PM_, PN_] 181
PEUGEOT
107 923
TOYOTA
Aygo 1231

CI-AX-5169
CITROËN
Jumpy II / Dispatch II (01/2007 ->) 225
FIAT
Scudo II 341
PEUGEOT
Expert II 977

CI-AX-5690
CITROËN
C4 Picasso I / Grand Picasso I (10/2006 ->) 195

CI-AX-7320
CITROËN
Jumper II / Relay II (04/2006 ->) 221
FIAT
Ducato III (07/2006 ->) 311
PEUGEOT
Boxer II 973

CI-AX-7879
CITROËN
Nemo 227
FIAT
Fiorino (2008 ->) 315
Linea 319
Qubo 337
PEUGEOT
Bipper 969

CI-AX-8762
CITROËN
C5 (02/2008 ->) [RD_, TD_] 201

CI-AX-8851
CITROËN
C3 (II) - C3 Picasso 185
DS3 211

CI-BJ-0523
CITROËN
Berlingo I (07/1996 ->) 177

...CI-BJ-0523
Xsara 237
Xsara Picasso 239
PEUGEOT
Partner I - Ranch 979

CI-BJ-0868
CITROËN
C2 - C3 183

CI-BJ-10658
CITROËN
C4 Aircross 187
C-Crosser 207
MITSUBISHI
Outlander II 791
PEUGEOT
4007 963
4008 965

CI-BJ-13988
CITROËN
C4 Picasso II / Grand Picasso II (02/2013 ->) 197
PEUGEOT
308 II 941

CI-BJ-3355
CITROËN
Berlingo I (07/1996 ->) 177
Xsara 237
ZX 241
PEUGEOT
Partner I - Ranch 979

CI-BJ-8795
CITROËN
C4 Cactus 189
C-ELYSEE 209
PEUGEOT
2008 959
208 931
301 933

CI-DS-3348
CITROËN
XM 235

CI-DS-3366
CITROËN
Berlingo I (07/1996 ->) 177
Xsara 237
ZX 241
PEUGEOT
Partner I - Ranch 979

CI-DS-5022
CITROËN
XM 235

CI-DS-5023
CITROËN
XM 235

CI-ES-0011
CITROËN
Saxo 229

...CI-ES-0011
PEUGEOT
106 921

CI-ES-0864
CITROËN
C2 - C3 183
PEUGEOT
1007 957

CI-ES-0865
CITROËN
C2 - C3 183
PEUGEOT
1007 957

CI-ES-0930
CITROËN
C5 199

CI-ES-0931
CITROËN
C5 199

CI-ES-13641
CITROËN
C-ELYSEE 209
PEUGEOT
301 933

CI-ES-13642
CITROËN
C-ELYSEE 209
PEUGEOT
301 933

CI-ES-13989
CITROËN
C4 Picasso II / Grand Picasso II (02/2013 ->) 197
PEUGEOT
308 II 941

CI-ES-13990
CITROËN
C4 Picasso II / Grand Picasso II (02/2013 ->) 197
PEUGEOT
308 II 941

CI-ES-14931
CITROËN
C2 - C3 183
PEUGEOT
1007 957

CI-ES-14932
CITROËN
C2 - C3 183
PEUGEOT
1007 957

CI-ES-1782
CITROËN
Saxo 229
PEUGEOT
106 921

CI-ES-2460
CITROËN
Jumper I / Relay I (02/1994 ->) [230, 244] 219
FIAT
Ducato II (03/1994 ->) 309
PEUGEOT
Boxer I 971

CI-ES-2466
CITROËN
C8 205
Jumpy I / Dispatch I (06/1994 ->) 223
FIAT
Scudo I 339
Ulysse II (08/2002 ->) 353
LANCIA
Phedra 593
PEUGEOT
807 955
Expert I 975

CI-ES-3848
CITROËN
Saxo 229
PEUGEOT
106 921

CI-ES-3964
CITROËN
C1 (06/2005 ->) [PM_, PN_] 181
PEUGEOT
107 923
TOYOTA
Aygo 1231

CI-ES-3965
CITROËN
C1 (06/2005 ->) [PM_, PN_] 181
PEUGEOT
107 923
TOYOTA
Aygo 1231

CI-ES-5119
CITROËN
Jumper II / Relay II (04/2006 ->) 221
FIAT
Ducato III (07/2006 ->) 311
PEUGEOT
Boxer II 973

CI-ES-5120
CITROËN
Jumper II / Relay II (04/2006 ->) 221
FIAT
Ducato III (07/2006 ->) 311
PEUGEOT
Boxer II 973

CI-ES-7237
CITROËN
C4 Picasso I / Grand Picasso I (10/2006 ->) 195

CI-ES-7238
CITROËN
C4 Picasso I / Grand Picasso I (10/2006 ->) 195

CI-ES-7316
CITROËN
Jumpy II / Dispatch II (01/2007 ->) 225
FIAT
Scudo II 341
PEUGEOT
Expert II 977

CI-ES-8328
CITROËN
C3 (II) - C3 Picasso 185
DS3 211

CI-ES-8329
CITROËN
C3 (II) - C3 Picasso 185
DS3 211

CI-ES-8465
CITROËN
C5 (02/2008 ->) [RD_, TD_] 201

CI-ES-8466
CITROËN
C5 (02/2008 ->) [RD_, TD_] 201

CI-ES-8975
CITROËN
Nemo 227
FIAT
Fiorino (2008 ->) 315
Linea 319
Qubo 337
PEUGEOT
Bipper 969

CI-ES-8976
CITROËN
Nemo 227
FIAT
Fiorino (2008 ->) 315
Linea 319
Qubo 337
PEUGEOT
Bipper 969

CI-LS-0445
CITROËN
Xantia 233

CI-LS-1727
CITROËN
Saxo 229
PEUGEOT
106 921

CI-LS-2468
CITROËN
C8 205
FIAT
Ulysse II (08/2002 ->) 353

MOOG

...CI-LS-2468

LANCIA
Phedra 593
PEUGEOT
807 955

CI-LS-3267

CITROËN
Jumper I / Relay I (02/1994 ->) [230, 244] 219
FIAT
Ducato II (03/1994 ->) 309
PEUGEOT
Boxer I 971

CI-LS-4959

CITROËN
C1 (06/2005 ->) [PM_, PN_] 181
PEUGEOT
107 923
TOYOTA
Aygo 1231

CI-LS-7259

CITROËN
Jumpy II / Dispatch II (01/2007 ->) 225
FIAT
Scudo II 341
PEUGEOT
Expert II 977

CI-LS-7297

CITROËN
Nemo 227
FIAT
Fiorino (2008 ->) 315
Linea 319
Qubo 337
PEUGEOT
Bipper 969

CI-LS-7321

CITROËN
Jumper II / Relay II (04/2006 ->) 221
FIAT
Ducato III (07/2006 ->) 311
PEUGEOT
Boxer II 973

CI-LS-7322

CITROËN
Jumper II / Relay II (04/2006 ->) 221
FIAT
Ducato III (07/2006 ->) 311
PEUGEOT
Boxer II 973

CI-RK-15001

CITROËN
ZX 241
PEUGEOT
Partner I - Ranch 979

CI-RK-15003

CITROËN
Xsara 237
ZX 241
PEUGEOT
Partner I - Ranch 979

CI-RK-15006

CITROËN
Xantia 233

CI-RK-15007

CITROËN
Xsara Picasso 239

CI-RK-15008

CITROËN
Xantia 233

CI-RK-15010

CITROËN
Evasion / Synergie 217
Jumpy I / Dispatch I (06/1994 ->) 223
FIAT
Scudo I 339
Ulysse I (-> 08/2002) 351
LANCIA
Zeta 599
PEUGEOT
806 953
Expert I 975

CI-RK-15017

CITROËN
Xantia 233

CI-RK-15018

CITROËN
Xsara 237

CI-RK-15019

CITROËN
Berlingo I (07/1996 ->) 177
Xsara 237

CI-RK-15045

CITROËN
Xantia 233

CI-RK-15059

CITROËN
C2 - C3 183
PEUGEOT
1007 957

CI-RK-3569

CITROËN
Xantia 233
XM 235

CI-RK-4894

CITROËN
C4 I (11/2004 ->) [LA, LC] 191
PEUGEOT
307 937

CI-SB-0224

CITROËN
Berlingo I (07/1996 ->) 177
PEUGEOT
Partner I - Ranch 979

CI-SB-0934

CITROËN
C2 - C3 183
PEUGEOT
1007 957

CI-SB-0935

CITROËN
C2 - C3 183
PEUGEOT
1007 957

CI-SB-10070

CITROËN
C2 - C3 183

CI-SB-10082

CITROËN
Jumper I / Relay I (02/1994 ->) [230, 244] 219
Jumper II / Relay II (04/2006 ->) 221
FIAT
Ducato II (03/1994 ->) 309
Ducato III (07/2006 ->) 311
PEUGEOT
Boxer I 971
Boxer II 973

CI-SB-10083

CITROËN
Jumper I / Relay I (02/1994 ->) [230, 244] 219
Jumper II / Relay II (04/2006 ->) 221
FIAT
Ducato II (03/1994 ->) 309
Ducato III (07/2006 ->) 311
PEUGEOT
Boxer I 971
Boxer II 973

CI-SB-10695

CITROËN
C4 II (11/2009 ->) [B7] 193
DS4 213
PEUGEOT
308 939

CI-SB-10709

CITROËN
Berlingo II (04/2008 ->) 179
C4 II (11/2009 ->) [B7] 193
DS4 213
PEUGEOT
3008 I 961
308 939
5008 967
Partner II 981

CI-SB-10710

CITROËN
Berlingo II (04/2008 ->) 179
C4 II (11/2009 ->) [B7] 193
DS4 213
PEUGEOT
308 939
Partner II 981

CI-SB-10711

CITROËN
Berlingo II (04/2008 ->) 179
C4 II (11/2009 ->) [B7] 193
DS4 213
PEUGEOT
308 939
Partner II 981

CI-SB-10735

CITROËN
C5 (02/2008 ->) [RD_, TD_] 201
PEUGEOT
407 947

CI-SB-10736

CITROËN
C5 (02/2008 ->) [RD_, TD_] 201
PEUGEOT
407 947

CI-SB-10785

CITROËN
C2 - C3 183
PEUGEOT
1007 957

CI-SB-10866

CITROËN
C5 (02/2008 ->) [RD_, TD_] 201
C6 203

CI-SB-10999

CITROËN
C3 (II) - C3 Picasso 185
C4 Cactus 189
DS3 211
PEUGEOT
2008 959

CI-SB-12604

CITROËN
C3 (II) - C3 Picasso 185
C4 Cactus 189
DS3 211
PEUGEOT
2008 959
208 931

CI-SB-1302

CITROËN
Saxo 229
PEUGEOT
106 921

CI-SB-1307

CITROËN
Xantia 233

CI-SB-1308
CITROËN
Xantia 233
CI-SB-1309
CITROËN
Xantia 233
CI-SB-1310
CITROËN
Saxo 229
PEUGEOT
106 921
CI-SB-13348
CITROËN
C5 (02/2008 ->) [RD_, TD_] 201
CI-SB-13496
CITROËN
C2 - C3 183
CI-SB-13517
CITROËN
C-Crosser 207
MITSUBISHI
Outlander II 791
PEUGEOT
4007 963
CI-SB-13519
CITROËN
Jumpy II / Dispatch II (01/2007 ->) 225
FIAT
Scudo II 341
PEUGEOT
Expert II 977
CI-SB-13678
CITROËN
Jumpy II / Dispatch II (01/2007 ->) 225
FIAT
Scudo II 341
PEUGEOT
Expert II 977
CI-SB-13679
CITROËN
C2 - C3 183
CI-SB-13680
CITROËN
C2 - C3 183
CI-SB-13993
CITROËN
C4 Picasso II / Grand Picasso II (02/2013 ->) 197
PEUGEOT
308 II 941
CI-SB-13994
CITROËN
C4 Picasso II / Grand Picasso II (02/2013 ->) 197
...CI-SB-13994
PEUGEOT
308 II 941
CI-SB-14829
CITROËN
C-ELYSEE 209
PEUGEOT
301 933
CI-SB-14915
CITROËN
C3 (II) - C3 Picasso 185
C4 Cactus 189
DS3 211
PEUGEOT
208 931
CI-SB-14916
CITROËN
C3 (II) - C3 Picasso 185
DS3 211
PEUGEOT
2008 959
CI-SB-15532
CITROËN
C5 (02/2008 ->) [RD_, TD_] 201
C6 203
CI-SB-2209
CITROËN
C5 199
CI-SB-2210
CITROËN
C5 199
CI-SB-4058
CITROËN
Xsara 237
Xsara Picasso 239
ZX 241
PEUGEOT
306 935
CI-SB-4059
CITROËN
Xsara 237
Xsara Picasso 239
ZX 241
PEUGEOT
306 935
CI-SB-4459
CITROËN
Xsara 237
Xsara Picasso 239
ZX 241
PEUGEOT
306 935
CI-SB-4473
CITROËN
Evasion / Synergie 217
...CI-SB-4473
Jumpy I / Dispatch I (06/1994 ->) 223
FIAT
Scudo I 339
Ulysse I (-> 08/2002) 351
LANCIA
Zeta 599
PEUGEOT
806 953
Expert I 975
CI-SB-4736
CITROËN
Berlingo I (07/1996 ->) 177
Xsara 237
Xsara Picasso 239
ZX 241
PEUGEOT
306 935
Partner I - Ranch 979
CI-SB-4737
CITROËN
Berlingo I (07/1996 ->) 177
Xsara 237
Xsara Picasso 239
ZX 241
PEUGEOT
306 935
Partner I - Ranch 979
CI-SB-4960
CITROËN
C1 (06/2005 ->) [PM_, PN_] 181
PEUGEOT
107 923
TOYOTA
Aygo 1231
CI-SB-4961
CITROËN
C1 (06/2005 ->) [PM_, PN_] 181
PEUGEOT
107 923
TOYOTA
Aygo 1231
CI-SB-4962
CITROËN
C1 (06/2005 ->) [PM_, PN_] 181
PEUGEOT
107 923
TOYOTA
Aygo 1231
CI-SB-5125
CITROËN
Jumper II / Relay II (04/2006 ->) 221
FIAT
Ducato III (07/2006 ->) 311
...CI-SB-5125
PEUGEOT
Boxer II 973
CI-SB-5126
CITROËN
Jumper II / Relay II (04/2006 ->) 221
FIAT
Ducato III (07/2006 ->) 311
PEUGEOT
Boxer II 973
CI-SB-6694
CITROËN
Xantia 233
CI-SB-6695
CITROËN
Xantia 233
CI-SB-6697
CITROËN
Saxo 229
PEUGEOT
106 921
CI-SB-6698
CITROËN
Saxo 229
PEUGEOT
106 921
CI-SB-6776
CITROËN
C5 199
CI-SB-6784
CITROËN
C2 - C3 183
CI-SB-7141
CITROËN
Evasion / Synergie 217
Jumpy I / Dispatch I (06/1994 ->) 223
FIAT
Scudo I 339
Ulysse I (-> 08/2002) 351
LANCIA
Zeta 599
PEUGEOT
306 935
806 953
Expert I 975
CI-SB-7317
CITROËN
Jumpy II / Dispatch II (01/2007 ->) 225
FIAT
Scudo II 341
PEUGEOT
Expert II 977
CI-SB-7938
CITROËN
C4 Aircross 187

...CI-SB-7938

C-Crosser 207

MITSUBISHI

ASX [GA_W_] 765

Outlander II 791

PEUGEOT

4007 963

4008 965

CI-SB-7939

CITROËN

C4 Aircross 187

C-Crosser 207

MITSUBISHI

Outlander II 791

PEUGEOT

4007 963

CI-SB-7949

CITROËN

C1 (06/2005 ->) [PM_, PN_] 181

PEUGEOT

107 923

TOYOTA

Aygo 1231

CI-SB-7966

CITROËN

Jumper I / Relay I (02/1994 ->) [230, 244] 219

FIAT

Ducato II (03/1994 ->) 309

PEUGEOT

Boxer I 971

CI-SB-7967

CITROËN

Jumper I / Relay I (02/1994 ->) [230, 244] 219

FIAT

Ducato II (03/1994 ->) 309

PEUGEOT

Boxer I 971

CI-SB-7974

CITROËN

Berlingo I (07/1996 ->) 177

PEUGEOT

Partner I - Ranch 979

CI-SB-8991

CITROËN

C3 (II) - C3 Picasso 185

PEUGEOT

207 929

CI-SB-8992

CITROËN

C2 - C3 183

CI-SB-8993

CITROËN

C4 I (11/2004 ->) [LA, LC] 191

PEUGEOT

307 937

CI-SB-9682

CITROËN

Jumper I / Relay I (02/1994 ->) [230, 244] 219

FIAT

Ducato II (03/1994 ->) 309

PEUGEOT

Boxer I 971

CI-SB-9684

CITROËN

Jumper I / Relay I (02/1994 ->) [230, 244] 219

FIAT

Ducato II (03/1994 ->) 309

PEUGEOT

Boxer I 971

CI-SB-9696

CITROËN

C8 205

Evasion / Synergie 217

Jumpy I / Dispatch I (06/1994 ->) 223

FIAT

Scudo I 339

Ulysse I (-> 08/2002) 351

Ulysse II (08/2002 ->) 353

LANCIA

Phedra 593

Zeta 599

PEUGEOT

806 953

807 955

Expert I 975

CI-SB-9698

CITROËN

C8 205

Evasion / Synergie 217

Jumpy I / Dispatch I (06/1994 ->) 223

FIAT

Scudo I 339

Ulysse I (-> 08/2002) 351

Ulysse II (08/2002 ->) 353

LANCIA

Phedra 593

Zeta 599

PEUGEOT

806 953

807 955

Expert I 975

CI-TC-0160

CITROËN

Xantia 233

CI-TC-0161

CITROËN

Xantia 233

CI-TC-0932

CITROËN

C2 - C3 183

...CI-TC-0932

PEUGEOT

1007 957

CI-TC-0933

CITROËN

C2 - C3 183

PEUGEOT

1007 957

CI-TC-10887

CITROËN

Jumpy I / Dispatch I (06/1994 ->) 223

FIAT

Scudo I 339

PEUGEOT

Expert I 975

CI-TC-10888

CITROËN

Jumpy I / Dispatch I (06/1994 ->) 223

FIAT

Scudo I 339

PEUGEOT

Expert I 975

CI-TC-12665

CITROËN

C5 (02/2008 ->) [RD_, TD_] 201

CI-TC-12666

CITROËN

C5 (02/2008 ->) [RD_, TD_] 201

CI-TC-14827

CITROËN

DS4 213

PEUGEOT

5008 967

CI-TC-14828

CITROËN

DS4 213

PEUGEOT

5008 967

CI-TC-14933

CITROËN

C4 Picasso II / Grand Picasso II (02/2013 ->) 197

CI-TC-14934

CITROËN

C4 Picasso II / Grand Picasso II (02/2013 ->) 197

CI-TC-15533

CITROËN

C5 (02/2008 ->) [RD_, TD_] 201

C6 203

CI-TC-15534

CITROËN

C5 (02/2008 ->) [RD_, TD_] 201

C6 203

CI-TC-15535

CITROËN

C5 (02/2008 ->) [RD_, TD_] 201

C6 203

CI-TC-15536

CITROËN

C5 (02/2008 ->) [RD_, TD_] 201

C6 203

CI-TC-2055

CITROËN

C5 199

CI-TC-2056

CITROËN

C5 199

CI-TC-7298

CITROËN

C8 205

Jumpy II / Dispatch II (01/2007 ->) 225

FIAT

Scudo II 341

Ulysse II (08/2002 ->) 353

LANCIA

Phedra 593

PEUGEOT

807 955

Expert II 977

CI-TC-7299

CITROËN

C8 205

Jumpy II / Dispatch II (01/2007 ->) 225

FIAT

Scudo II 341

Ulysse II (08/2002 ->) 353

LANCIA

Phedra 593

PEUGEOT

807 955

Expert II 977

CI-TC-8418

CITROËN

Jumpy II / Dispatch II (01/2007 ->) 225

FIAT

Scudo II 341

PEUGEOT

Expert II 977

CI-TC-8419

CITROËN

Jumpy II / Dispatch II (01/2007 ->) 225

FIAT

Scudo II 341

PEUGEOT

Expert II 977

CI-WP-0600

CITROËN

Berlingo I (07/1996 ->) 177

...CI-WP-0600
Xsara 237
Xsara Picasso 239
PEUGEOT
Partner I - Ranch 979

CI-WP-0601
CITROËN
Berlingo I (07/1996 ->) 177
Xsara 237
Xsara Picasso 239
PEUGEOT
Partner I - Ranch 979

CI-WP-0713
CITROËN
Berlingo I (07/1996 ->) 177
Xsara 237
Xsara Picasso 239
PEUGEOT
Partner I - Ranch 979

CI-WP-0714
CITROËN
Berlingo I (07/1996 ->) 177
Xsara 237
Xsara Picasso 239
PEUGEOT
Partner I - Ranch 979

CI-WP-12503
CITROËN
C2 - C3 183
PEUGEOT
1007 957

CI-WP-12504
CITROËN
C2 - C3 183
PEUGEOT
1007 957

CI-WP-13401
CITROËN
Berlingo I (07/1996 ->) 177
Xsara 237
ZX 241
PEUGEOT
Partner I - Ranch 979

CI-WP-13402
CITROËN
Berlingo I (07/1996 ->) 177
Xsara 237
ZX 241
PEUGEOT
Partner I - Ranch 979

CI-WP-13639
CITROËN
C-ELYSEE 209
PEUGEOT
301 933

CI-WP-13640
CITROËN
C-ELYSEE 209

...CI-WP-13640
PEUGEOT
301 933

CI-WP-13991
CITROËN
C4 Picasso II / Grand Picasso II (02/2013 ->) 197

CI-WP-13992
CITROËN
C4 Picasso II / Grand Picasso II (02/2013 ->) 197

CI-WP-2464
CITROËN
C8 205
FIAT
Ulysse II (08/2002 ->) 353
LANCIA
Phedra 593
PEUGEOT
807 955

CI-WP-2465
CITROËN
C8 205
FIAT
Ulysse II (08/2002 ->) 353
LANCIA
Phedra 593
PEUGEOT
807 955

CI-WP-3876
CITROËN
Jumper I / Relay I (02/1994 ->) [230, 244] 219
FIAT
Ducato II (03/1994 ->) 309
PEUGEOT
Boxer I 971

CI-WP-3877
CITROËN
Jumper I / Relay I (02/1994 ->) [230, 244] 219
FIAT
Ducato II (03/1994 ->) 309
PEUGEOT
Boxer I 971

CI-WP-8760
CITROËN
C3 (II) - C3 Picasso 185
C4 Cactus 189
DS3 211
PEUGEOT
2008 959

CI-WP-8761
CITROËN
C3 (II) - C3 Picasso 185
C4 Cactus 189
DS3 211

...CI-WP-8761
PEUGEOT
2008 959

DE-AX-0447
CHEVROLET
Matiz 157
DAEWOO
Matiz 157

DE-AX-10652
CHEVROLET
Spark [M300] 165

DE-AX-1773
CHEVROLET
Matiz 157
DAEWOO
Matiz 157

DE-AX-1821
DAEWOO
Nubira I 273

DE-AX-1822
CHEVROLET
Matiz 157
DAEWOO
Matiz 157

DE-AX-2470
CHEVROLET
Rezzo - Tacuma 163
DAEWOO
Rezzo - Tacuma 163

DE-AX-2474
CHEVROLET
Aveo [T250, T255] 145
Kalos 153
DAEWOO
Kalos 153

DE-AX-2479
DAEWOO
Leganza 269

DE-AX-5636
CHEVROLET
Lacetti 155
Nubira 159
DAEWOO
Lacetti 155
Nubira III (2003->) 275

DE-AX-5752
DAEWOO
Korando - Musso 263
SSANGYONG
Korando - Musso 263

DE-AX-8886
CHEVROLET
Epica - Evanda 151

DE-BJ-0633
DAEWOO
Nubira I 273

DE-BJ-0636
DAEWOO
Leganza 269

DE-BJ-10655
CHEVROLET
Spark [M300] 165

DE-BJ-2469
CHEVROLET
Aveo [T250, T255] 145
Kalos 153
DAEWOO
Kalos 153

DE-BJ-2473
CHEVROLET
Rezzo - Tacuma 163
DAEWOO
Rezzo - Tacuma 163

DE-BJ-2863
DAEWOO
Korando - Musso 263
SSANGYONG
Korando - Musso 263

DE-BJ-2865
DAEWOO
Korando - Musso 263
SSANGYONG
Korando - Musso 263

DE-BJ-3970
CHEVROLET
Lacetti 155
Nubira 159
DAEWOO
Lacetti 155
Nubira III (2003->) 275

DE-BJ-5422
CHEVROLET
Epica - Evanda 151
DAEWOO
Evanda 259

DE-DS-0127
DAEWOO
Tico 279

DE-ES-0126
DAEWOO
Tico 279

DE-ES-0452
CHEVROLET
Matiz 157
DAEWOO
Matiz 157

DE-ES-0634
DAEWOO
Leganza 269
Nubira I 273

DE-ES-0639
CHEVROLET
Matiz 157

...DE-ES-0639
DAEWOO
Matiz 157
SUBARU
Justy III 1183

DE-ES-10621
CHEVROLET
Spark [M300] 165

DE-ES-2471
CHEVROLET
Rezzo - Tacuma 163
DAEWOO
Rezzo - Tacuma 163

DE-ES-2472
CHEVROLET
Rezzo - Tacuma 163
DAEWOO
Rezzo - Tacuma 163

DE-ES-2475
CHEVROLET
Aveo [T250, T255] 145
Kalos 153
DAEWOO
Kalos 153

DE-ES-2476
CHEVROLET
Aveo [T250, T255] 145
Kalos 153
DAEWOO
Kalos 153

DE-ES-2861
DAEWOO
Korando - Musso 263
SSANGYONG
Korando - Musso 263

DE-ES-3893
CHEVROLET
Aveo [T250, T255] 145
Kalos 153
DAEWOO
Kalos 153

DE-ES-3894
CHEVROLET
Aveo [T250, T255] 145
Kalos 153
DAEWOO
Kalos 153

DE-ES-3968
CHEVROLET
Lacetti 155
Nubira 159
DAEWOO
Lacetti 155
Nubira III (2003->) 275

DE-ES-3969
CHEVROLET
Lacetti 155

...DE-ES-3969
Nubira 159
DAEWOO
Lacetti 155
Nubira III (2003->) 275

DE-ES-7242
CHEVROLET
Epica - Evanda 151
DAEWOO
Evanda 259

DE-LS-10435
CHEVROLET
Epica - Evanda 151

DE-LS-10623
CHEVROLET
Spark [M300] 165

DE-LS-2299
CHEVROLET
Aveo [T250, T255] 145
Kalos 153
Rezzo - Tacuma 163
DAEWOO
Kalos 153
Rezzo - Tacuma 163

DE-LS-2862
SSANGYONG
Korando - Musso 263

DE-LS-3271
DAEWOO
Nubira I 273

DE-LS-3896
CHEVROLET
Lacetti 155
Nubira 159
DAEWOO
Lacetti 155
Nubira III (2003->) 275

DE-LS-3897
CHEVROLET
Lacetti 155
Nubira 159
DAEWOO
Lacetti 155
Nubira III (2003->) 275

DE-LS-3971
CHEVROLET
Lacetti 155
Nubira 159
DAEWOO
Lacetti 155
Nubira III (2003->) 275

DE-LS-5135
CHEVROLET
Epica - Evanda 151
DAEWOO
Evanda 259

...DE-LS-5135
Leganza 269

DE-LS-5136
CHEVROLET
Epica - Evanda 151
DAEWOO
Evanda 259
Leganza 269

DE-LS-8809
DAEWOO
Leganza 269

DE-LS-8903
CHEVROLET
Epica - Evanda 151

DE-LS-8904
CHEVROLET
Epica - Evanda 151

DE-SB-10656
CHEVROLET
Spark [M300] 165

DE-SB-10657
CHEVROLET
Spark [M300] 165

DE-SB-10821
CHEVROLET
Epica - Evanda 151

DE-SB-13953
CHEVROLET
Aveo [T250, T255] 145
Kalos 153

DE-SB-13996
DAEWOO
Matiz 157

DE-SB-14056
CHEVROLET
Lacetti 155
Nubira 159
DAEWOO
Lacetti 155
Nubira I 273
Nubira III (2003->) 275

DE-SB-14618
CHEVROLET
Lacetti 155
Nubira 159
DAEWOO
Lacetti 155
Nubira III (2003->) 275

DE-SB-14703
CHEVROLET
Epica - Evanda 151

DE-SB-4848
DAEWOO
Nubira I 273

DE-SB-4849
DAEWOO
Nubira I 273

DE-SB-5775
CHEVROLET
Lacetti 155
Nubira 159
Rezzo - Tacuma 163
DAEWOO
Lacetti 155
Nubira III (2003->) 275
Rezzo - Tacuma 163

DE-SB-7239
CHEVROLET
Aveo [T250, T255] 145
Kalos 153
DAEWOO
Kalos 153

DE-SB-7240
CHEVROLET
Aveo [T250, T255] 145
Kalos 153
DAEWOO
Kalos 153

DE-SB-7241
CHEVROLET
Lacetti 155
Nubira 159
Rezzo - Tacuma 163
DAEWOO
Lacetti 155
Nubira III (2003->) 275
Rezzo - Tacuma 163

DE-SB-8905
CHEVROLET
Epica - Evanda 151

DE-SB-8906
CHEVROLET
Epica - Evanda 151

DE-SB-9724
CHEVROLET
Aveo [T250, T255] 145
Kalos 153
DAEWOO
Kalos 153

DE-SB-9726
CHEVROLET
Aveo [T250, T255] 145
Kalos 153
DAEWOO
Kalos 153

DE-TC-0125
CHEVROLET
Matiz 157
DAEWOO
Matiz 157

...DE-TC-0125

Tico 279

OPEL

Agila I 859

SUBARU

Justy III 1183

SUZUKI

Alto I, II & III (-> 06/2002) 1189

Wagon R+ 1219

VAUXHALL

Agila I 859

DE-WP-0630

DAEWOO

Nubira I 273

DE-WP-0631

DAEWOO

Nubira I 273

DE-WP-10653

CHEVROLET

Spark [M300] 165

DE-WP-10654

CHEVROLET

Spark [M300] 165

DE-WP-2477

CHEVROLET

Aveo [T250, T255] 145

Kalos 153

DAEWOO

Kalos 153

DE-WP-2478

CHEVROLET

Aveo [T250, T255] 145

Kalos 153

DAEWOO

Kalos 153

DE-WP-4419

CHEVROLET

Lacetti 155

Nubira 159

DAEWOO

Lacetti 155

Nubira III (2003->) 275

DE-WP-4420

CHEVROLET

Lacetti 155

Nubira 159

DAEWOO

Lacetti 155

Nubira III (2003->) 275

DE-WP-5637

CHEVROLET

Rezzo - Tacuma 163

DAEWOO

Rezzo - Tacuma 163

DE-WP-5638

CHEVROLET

Rezzo - Tacuma 163

...DE-WP-5638

DAEWOO

Rezzo - Tacuma 163

DI-AX-2480

DAIHATSU

Cuore (1985 -> 1996) 283

DI-AX-2481

DAIHATSU

Cuore (1985 -> 1996) 283

DI-AX-2482

DAIHATSU

Cuore (1985 -> 1996) 283

DI-AX-2501

DAIHATSU

Terios I (-> 10/2005) [J1] 285

DI-ES-10507

DAIHATSU

Terios II (11/2005 ->) [J2] 287

DI-ES-10508

DAIHATSU

Terios II (11/2005 ->) [J2] 287

DI-ES-1606

DAIHATSU

Charade (1987 ->)[G100-200] 281

DI-ES-2502

DAIHATSU

Terios I (-> 10/2005) [J1] 285

DI-ES-2619

DAIHATSU

Cuore (1985 -> 1996) 283

DI-ES-2620

DAIHATSU

Cuore (1985 -> 1996) 283

DI-LS-10505

DAIHATSU

Terios II (11/2005 ->) [J2] 287

DI-SB-10503

DAIHATSU

Terios II (11/2005 ->) [J2] 287

DI-SB-10504

DAIHATSU

Terios II (11/2005 ->) [J2] 287

DI-TC-2497

DAIHATSU

Cuore (1985 -> 1996) 283

DI-TC-2498

DAIHATSU

Cuore (1985 -> 1996) 283

DI-WP-10501

DAIHATSU

Terios II (11/2005 ->) [J2] 287

DI-WP-10502

DAIHATSU

Terios II (11/2005 ->) [J2] 287

DS1235

JEEP

Wrangler II (08/1996 -> 04/2007) [TJ] 525

FD-AX-0007

FORD

Escort V, VI, VII - Express (1990 ->) 363

FD-AX-0026

FORD

Escort V, VI, VII - Express (1990 ->) 363

FD-AX-0270

FORD

Ka I 381

FD-AX-0470

FORD

Mondeo III 395

FD-AX-12605

FORD

Focus III (04/2011 ->) 375

FD-AX-13617

FORD

Transit / Tourneo Custom (04/2012 ->) 413

Transit Courrier [C4A] 411

FD-AX-1537

FORD

Focus I (-> 11/2004) 371

Transit Connect - Tourneo Connect 409

FD-AX-2197

FORD

Mondeo II 393

FD-AX-2258

FORD

Fiesta V (2002 -> 2008) - Fusion 367

MAZDA

2 (-> 2007) [DY] 625

FD-AX-2382

FORD

Scorpio II 405

FD-AX-2526

FORD

Transit IV 417

Transit V 419

FD-AX-2527

FORD

Transit IV 417

Transit V 419

FD-AX-3388

FORD

Transit III (Rack / Pinion) 415

FD-AX-3957

FORD

Focus II (11/2004 ->) / Focus C-Max 373

Kuga 385

VOLVO

C30 (533) 1361

C70 II (2006 ->) 1363

S40 II (01/2004 ->) 1367

V50 1381

FD-AX-4145

FORD

Mondeo I 391

FD-AX-4146

FORD

Cougar 359

Mondeo I 391

FD-AX-4153

FORD

Fiesta IV (1995 -> 2001) - Fiesta Van / Courier (1996 ->) 365

Puma 401

MAZDA

121 III (03/1996 ->) 641

FD-AX-4851

FORD

Focus II (11/2004 ->) / Focus C-Max 373

FD-AX-5110

FORD

Galaxy II 379

Mondeo IV 397

S-Max 407

VOLVO

S80 II 1377

V70 III (04/2007 ->) 1385

XC70 II (136) 1389

FD-AX-7388

FORD

B-Max 355

Ecosport 361

Fiesta VI (2008 ->) 369

FD-AX-8855

FORD

C-Max II, Grand C-Max 357

Focus III (04/2011 ->) 375

FD-BJ-0425

FORD

Focus I (-> 11/2004) 371

FD-BJ-0474

FORD

Mondeo III 395

JAGUAR

X-Type 515

FD-BJ-0814

FORD

Transit Connect - Tourneo Connect 409

MOOG

...FD-BJ-0814
Transit IV 417
Transit V 419

FD-BJ-12509
FORD
C-Max II, Grand C-Max 357
Focus III (04/2011 ->) 375

FD-BJ-12510
FORD
C-Max II, Grand C-Max 357
Focus III (04/2011 ->) 375

FD-BJ-2260
FORD
Fiesta V (2002 -> 2008) - Fusion 367
MAZDA
2 (-> 2007) [DY] 625

FD-BJ-4115
FORD
Mondeo I 391
Mondeo II 393

FD-BJ-4122
FORD
Escort V, VI, VII - Express (1990 ->) 363

FD-BJ-4130
FORD
Transit III (Rack / Pinion) 415

FD-BJ-4134
FORD
Fiesta IV (1995 -> 2001) - Fiesta Van / Courier (1996 ->) 365
Ka I 381
Puma 401
MAZDA
121 III (03/1996 ->) 641

FD-BJ-7296
FORD
Galaxy II 379
Mondeo IV 397
S-Max 407
VOLVO
S80 II 1377
V70 III (04/2007 ->) 1385

FD-BJ-8090
FORD
B-Max 355
Ecosport 361
Fiesta VI (2008 ->) 369
MAZDA
2 (11/2014 ->) [DJ, DL] 629
2 (2008 ->) [DE] 627

FD-BJ-8340
FORD
Kuga 385

FD-BJ-8341
FORD
Kuga 385

FD-BJ-8945
FORD
Transit V 419

FD-DS-4151
FORD
Fiesta IV (1995 -> 2001) - Fiesta Van / Courier (1996 ->) 365
Puma 401
MAZDA
121 III (03/1996 ->) 641

FD-DS-4152
FORD
Fiesta IV (1995 -> 2001) - Fiesta Van / Courier (1996 ->) 365
Puma 401
MAZDA
121 III (03/1996 ->) 641

FD-ES-0604
FORD
Scorpio II 405

FD-ES-0605
FORD
Scorpio II 405

FD-ES-0841
FORD
Mondeo III 395
JAGUAR
X-Type 515

FD-ES-0957
FORD
Transit IV 417
Transit V 419

FD-ES-14911
FORD
Mondeo V 399

FD-ES-14912
FORD
Mondeo V 399

FD-ES-1535
FORD
Focus I (-> 11/2004) 371

FD-ES-1536
FORD
Focus I (-> 11/2004) 371

FD-ES-2050
FORD
Transit Connect - Tourneo Connect 409

FD-ES-2261
FORD
Fiesta V (2002 -> 2008) - Fusion 367

...FD-ES-2261
MAZDA
2 (-> 2007) [DY] 625

FD-ES-2262
FORD
Fiesta V (2002 -> 2008) - Fusion 367
MAZDA
2 (-> 2007) [DY] 625

FD-ES-3665
FORD
Focus II (11/2004 ->) / Focus C-Max 373
VOLVO
C30 (533) 1361
C70 II (2006 ->) 1363
S40 II (01/2004 ->) 1367
V50 1381

FD-ES-3891
FORD
Focus II (11/2004 ->) / Focus C-Max 373
VOLVO
C30 (533) 1361
C70 II (2006 ->) 1363
S40 II (01/2004 ->) 1367
V50 1381

FD-ES-4105
FORD
Escort V, VI, VII - Express (1990 ->) 363

FD-ES-4106
FORD
Escort V, VI, VII - Express (1990 ->) 363

FD-ES-4107
FORD
Transit III (Rack / Pinion) 415

FD-ES-4112
FORD
Mondeo I 391

FD-ES-4113
FORD
Mondeo I 391

FD-ES-4125
FORD
Ka I 381

FD-ES-4147
FORD
Fiesta IV (1995 -> 2001) - Fiesta Van / Courier (1996 ->) 365
Puma 401
MAZDA
121 III (03/1996 ->) 641

FD-ES-4148
FORD
Fiesta IV (1995 -> 2001) - Fiesta Van / Courier (1996 ->) 365

...FD-ES-4148
Puma 401
MAZDA
121 III (03/1996 ->) 641

FD-ES-4155
FORD
Cougar 359
Mondeo II 393

FD-ES-4156
FORD
Cougar 359
Mondeo II 393

FD-ES-5108
FORD
Galaxy II 379
Mondeo IV 397
S-Max 407
LAND ROVER
Freelander II 613
VOLVO
S80 II 1377
V70 III (04/2007 ->) 1385
XC70 II (136) 1389

FD-ES-5109
FORD
Galaxy II 379
Mondeo IV 397
S-Max 407
LAND ROVER
Freelander II 613
VOLVO
S80 II 1377
V70 III (04/2007 ->) 1385
XC70 II (136) 1389

FD-ES-7386
FORD
B-Max 355
Ecosport 361
Fiesta VI (2008 ->) 369

FD-ES-7387
FORD
B-Max 355
Ecosport 361
Fiesta VI (2008 ->) 369

FD-ES-8337
FORD
Kuga 385

FD-ES-8338
FORD
Kuga 385

FD-ES-8999
FORD
C-Max II, Grand C-Max 357
Focus III (04/2011 ->) 375

FD-ES-9000
FORD
C-Max II, Grand C-Max 357

...FD-ES-9000
Focus III (04/2011 ->) 375

FD-LS-0090
FORD
Escort V, VI, VII - Express (1990 ->) 363
Fiesta IV (1995 -> 2001) - Fiesta Van / Courier (1996 ->) 365
Focus I (-> 11/2004) 371
Ka I 381
Puma 401
MAZDA
121 III (03/1996 ->) 641

FD-LS-0122
FORD
Focus I (-> 11/2004) 371
MITSUBISHI
Colt VI (06/2004 ->) 771

FD-LS-0469
FORD
Mondeo III 395
JAGUAR
X-Type 515

FD-LS-0808
FORD
Mondeo III 395
JAGUAR
X-Type 515

FD-LS-0950
FORD
Focus I (-> 11/2004) 371

FD-LS-0962
FORD
Transit III (Rack / Pinion) 415

FD-LS-0963
FORD
Transit III (Rack / Pinion) 415

FD-LS-10437
FORD
Focus II (11/2004 ->) / Focus C-Max 373
VOLVO
C30 (533) 1361

FD-LS-10512
FORD
Kuga 385

FD-LS-10901
FORD
C-Max II, Grand C-Max 357
Focus III (04/2011 ->) 375

FD-LS-14891
FORD
Fiesta VI (2008 ->) 369
MAZDA
2 (2008 ->) [DE] 627

FD-LS-14945
FORD
Mondeo V 399

FD-LS-15239
FORD
Mondeo V 399

FD-LS-2016
FORD
Cougar 359
Mondeo I 391
Mondeo II 393

FD-LS-2049
FORD
Transit Connect - Tourneo Connect 409

FD-LS-2051
FORD
Transit Connect - Tourneo Connect 409

FD-LS-2259
FORD
Fiesta V (2002 -> 2008) - Fusion 367
MAZDA
2 (-> 2007) [DY] 625

FD-LS-2269
FORD
Mondeo I 391

FD-LS-2368
FORD
Scorpio II 405

FD-LS-3274
FORD
Mondeo III 395

FD-LS-3286
FORD
Mondeo III 395
JAGUAR
X-Type 515

FD-LS-3662
FORD
Focus II (11/2004 ->) / Focus C-Max 373
MAZDA
3 (2003 -> 2009) [BK] 631
5 [CR19] 635
VOLVO
C70 II (2006 ->) 1363
S40 II (01/2004 ->) 1367
V50 1381

FD-LS-3667
FORD
C-Max II, Grand C-Max 357
Focus II (11/2004 ->) / Focus C-Max 373
Focus III (04/2011 ->) 375

...FD-LS-3667
Kuga 385
MAZDA
3 (2003 -> 2009) [BK] 631
VOLVO
C30 (533) 1361
C70 II (2006 ->) 1363
S40 II (01/2004 ->) 1367
V50 1381

FD-LS-4064
FORD
Maverick I 389
NISSAN
Terrano I & II 847

FD-LS-4114
FORD
Cougar 359
Mondeo I 391
Mondeo II 393

FD-LS-5111
FORD
Galaxy II 379
Mondeo IV 397
S-Max 407
VOLVO
S60 II (134) 1371
S80 II 1377
V70 III (04/2007 ->) 1385
XC70 II (136) 1389

FD-LS-5444
FORD
Mondeo III 395
JAGUAR
X-Type 515

FD-LS-5445
FORD
Mondeo III 395
JAGUAR
X-Type 515

FD-LS-5446
FORD
Mondeo III 395
JAGUAR
X-Type 515

FD-LS-5613
FORD
Transit IV 417
Transit V 419

FD-LS-5699
FORD
Galaxy II 379
Mondeo IV 397
S-Max 407
VOLVO
S60 II (134) 1371
S80 II 1377

...FD-LS-5699
V70 III (04/2007 ->) 1385
XC70 II (136) 1389

FD-LS-5736
FORD
Transit IV 417

FD-LS-5751
FORD
Mondeo II 393

FD-LS-6620
FORD
Transit IV 417

FD-LS-7924
FORD
Transit / Tourneo Custom (04/2012 ->) 413
Transit Courrier [C4A] 411
Transit IV 417
Transit V 419

FD-LS-8093
FORD
B-Max 355
Ecosport 361
Fiesta VI (2008 ->) 369
MAZDA
2 (2008 ->) [DE] 627

FD-RK-15038
FORD
Galaxy II 379
Mondeo IV 397
S-Max 407
VOLVO
S60 II (134) 1371
S80 II 1377
V70 II (2000 ->) 1383
V70 III (04/2007 ->) 1385
XC70 II (136) 1389

FD-RK-15055
FORD
Focus I (-> 11/2004) 371

FD-RK-15057
FORD
Fiesta V (2002 -> 2008) - Fusion 367
MAZDA
2 (-> 2007) [DY] 625

FD-RK-15069
FORD
Transit Connect - Tourneo Connect 409

FD-RK-3954
FORD
Mondeo I 391
Mondeo II 393

FD-RK-3955
FORD
Escort V, VI, VII - Express (1990 ->) 363

MOOG

...FD-RK-3955

Fiesta IV (1995 -> 2001) - Fiesta Van / Courier (1996 365
Ka I 381
Puma 401

FD-RK-5630

FORD
Focus I (-> 11/2004) 371

FD-RK-5641

FORD
Fiesta IV (1995 -> 2001) - Fiesta Van / Courier (1996 ->) 365

FD-RK-6611

FORD
Focus I (-> 11/2004) 371

FD-RK-6612

FORD
Focus II (11/2004 ->) / Focus C-Max 373

FD-SB-0190

FORD
Focus I (-> 11/2004) 371

FD-SB-0191

FORD
Focus I (-> 11/2004) 371
Focus II (11/2004 ->) / Focus C-Max 373
Kuga 385
MAZDA
3 (2003 -> 2009) [BK] 631
5 [CR19] 635
VOLVO
C30 (533) 1361
C70 II (2006 ->) 1363
S40 II (01/2004 ->) 1367
V50 1381

FD-SB-0492

FORD
Mondeo III 395
JAGUAR
X-Type 515

FD-SB-0497

FORD
Mondeo III 395
JAGUAR
X-Type 515

FD-SB-10069

FORD
Focus II (11/2004 ->) / Focus C-Max 373

FD-SB-10076

FORD
Focus II (11/2004 ->) / Focus C-Max 373
MAZDA
3 (2003 -> 2009) [BK] 631

...FD-SB-10076

5 [CR19] 635

FD-SB-10173

FORD
Fiesta VI (2008 ->) 369

FD-SB-10174

FORD
Focus II (11/2004 ->) / Focus C-Max 373

FD-SB-10176

FORD
Mondeo IV 397
S-Max 407
VOLVO
S60 II (134) 1371
S80 II 1377
V70 III (04/2007 ->) 1385

FD-SB-10177

FORD
Mondeo IV 397

FD-SB-10178

FORD
Transit IV 417

FD-SB-10674

FORD
Focus I (-> 11/2004) 371
Focus II (11/2004 ->) / Focus C-Max 373
MAZDA
3 (2003 -> 2009) [BK] 631
5 [CR19] 635
VOLVO
S40 II (01/2004 ->) 1367
V50 1381

FD-SB-10690

FORD
Transit IV 417

FD-SB-10721

FORD
Mondeo I 391
Mondeo II 393

FD-SB-10726

FORD
Transit IV 417
Transit V 419

FD-SB-10853

FORD
Focus I (-> 11/2004) 371
MAZDA
3 (2003 -> 2009) [BK] 631
5 [CR19] 635
VOLVO
C30 (533) 1361
C70 II (2006 ->) 1363
S40 II (01/2004 ->) 1367
V50 1381

FD-SB-12511

FORD
C-Max II, Grand C-Max 357
Focus III (04/2011 ->) 375
Kuga II 387

FD-SB-12512

FORD
C-Max II, Grand C-Max 357
Focus III (04/2011 ->) 375

FD-SB-12513

FORD
Galaxy II 379
Mondeo IV 397
S-Max 407

FD-SB-12514

FORD
Galaxy II 379
Mondeo IV 397
S-Max 407
VOLVO
S60 II (134) 1371
S80 II 1377
V70 III (04/2007 ->) 1385
XC70 II (136) 1389

FD-SB-12518

FORD
Galaxy II 379
Mondeo IV 397
S-Max 407
VOLVO
S60 II (134) 1371
S80 II 1377
V70 III (04/2007 ->) 1385
XC70 II (136) 1389

FD-SB-12519

FORD
Galaxy II 379
Mondeo IV 397
S-Max 407
VOLVO
S60 II (134) 1371
S80 II 1377
V70 III (04/2007 ->) 1385
XC70 II (136) 1389

FD-SB-12520

FORD
Mondeo III 395

FD-SB-12523

FORD
Mondeo III 395

FD-SB-12524

FORD
Transit Connect - Tourneo Connect 409

FD-SB-12667

FORD
C-Max II, Grand C-Max 357

FD-SB-12696

FORD
Fiesta IV (1995 -> 2001) - Fiesta Van / Courier (1996 ->) 365
Ka I 381
Puma 401

FD-SB-13259

FORD
Transit IV 417

FD-SB-13428

FORD
Focus I (-> 11/2004) 371

FD-SB-13429

FORD
Focus I (-> 11/2004) 371

FD-SB-1344

FORD
Escort V, VI, VII - Express (1990 ->) 363
Ka I 381

FD-SB-1345

FORD
Escort V, VI, VII - Express (1990 ->) 363
Ka I 381

FD-SB-1346

FORD
Mondeo I 391

FD-SB-1347

FORD
Mondeo I 391
Mondeo II 393

FD-SB-1348

FORD
Mondeo I 391
Mondeo II 393

FD-SB-13487

FORD
Transit V 419

FD-SB-1350

FORD
Fiesta IV (1995 -> 2001) - Fiesta Van / Courier (1996 ->) 365
Puma 401
MAZDA
121 III (03/1996 ->) 641

FD-SB-1351

FORD
Fiesta IV (1995 -> 2001) - Fiesta Van / Courier (1996 ->) 365
Puma 401
MAZDA
121 III (03/1996 ->) 641

FD-SB-13516

FORD
C-Max II, Grand C-Max 357

FD-SB-1352
FORD
Focus I (-> 11/2004) 371

FD-SB-1353
FORD
Focus I (-> 11/2004) 371

FD-SB-13750
FORD
C-Max II, Grand C-Max 357
Focus III (04/2011 ->) 375
VOLVO
V40 Hatchback (03/2012 ->) 1379

FD-SB-13761
FORD
C-Max II, Grand C-Max 357
Focus III (04/2011 ->) 375
Kuga II 387

FD-SB-13777
FORD
Galaxy II 379
Mondeo IV 397
S-Max 407

FD-SB-13778
FORD
Galaxy II 379
Mondeo IV 397
S-Max 407

FD-SB-14048
FORD
Focus II (11/2004 ->) / Focus C-Max 373
Focus III (04/2011 ->) 375
VOLVO
C30 (533) 1361

FD-SB-14079
FORD
Transit Connect - Tourneo Connect 409

FD-SB-14762
FORD
Galaxy II 379
Mondeo IV 397
S-Max 407
VOLVO
S60 II (134) 1371

FD-SB-14807
FORD
Transit V 419

FD-SB-14991
FORD
Focus II (11/2004 ->) / Focus C-Max 373
VOLVO
C30 (533) 1361
S40 II (01/2004 ->) 1367
V50 1381

FD-SB-15215
FORD
Mondeo V 399

FD-SB-15216
FORD
Mondeo V 399

FD-SB-15324
FORD
Mondeo V 399

FD-SB-15341
FORD
B-Max 355

FD-SB-15362
FORD
Mondeo V 399

FD-SB-15694
FORD
Fiesta IV (1995 -> 2001) - Fiesta Van / Courier (1996 ->) 365
Ka I 381

FD-SB-2263
FORD
Fiesta V (2002 -> 2008) - Fusion 367
MAZDA
2 (-> 2007) [DY] 625

FD-SB-2264
FORD
Fiesta V (2002 -> 2008) - Fusion 367
MAZDA
2 (-> 2007) [DY] 625

FD-SB-2528
FORD
Transit IV 417
Transit V 419

FD-SB-2529
FORD
Transit IV 417
Transit V 419

FD-SB-2530
FORD
Transit Connect - Tourneo Connect 409

FD-SB-3161
FORD
Escort V, VI, VII - Express (1990 ->) 363
Fiesta IV (1995 -> 2001) - Fiesta Van / Courier (1996 ->) 365
Puma 401
MAZDA
121 III (03/1996 ->) 641

FD-SB-3480
FORD
Mondeo III 395

...FD-SB-3480
JAGUAR
X-Type 515

FD-SB-3501
FORD
Mondeo III 395
JAGUAR
X-Type 515

FD-SB-3659
FORD
Focus I (-> 11/2004) 371

FD-SB-4060
FORD
Fiesta IV (1995 -> 2001) - Fiesta Van / Courier (1996 ->) 365
Ka I 381
Puma 401
MAZDA
121 III (03/1996 ->) 641

FD-SB-4467
FORD
Escort V, VI, VII - Express (1990 ->) 363

FD-SB-4507
FORD
Transit III (Rack / Pinion) 415

FD-SB-4509
FORD
Transit III (Rack / Pinion) 415

FD-SB-5114
FORD
Galaxy II 379
Mondeo IV 397
S-Max 407
VOLVO
S60 II (134) 1371
S80 II 1377
V70 III (04/2007 ->) 1385

FD-SB-5115
FORD
Galaxy II 379
Mondeo IV 397
S-Max 407
VOLVO
S60 II (134) 1371
S80 II 1377
V70 III (04/2007 ->) 1385

FD-SB-5116
FORD
Galaxy II 379
Mondeo IV 397
S-Max 407
VOLVO
S60 II (134) 1371
S80 II 1377
V70 III (04/2007 ->) 1385

FD-SB-5644
FORD
Transit Connect - Tourneo Connect 409

FD-SB-5753
FORD
Mondeo II 393

FD-SB-6621
FORD
Cougar 359
Mondeo I 391
Mondeo II 393
Scorpio II 405

FD-SB-6664
FORD
Fiesta IV (1995 -> 2001) - Fiesta Van / Courier (1996 ->) 365
Ka I 381

FD-SB-6665
FORD
Ka I 381

FD-SB-6666
FORD
Transit III (Rack / Pinion) 415

FD-SB-6667
FORD
Transit III (Rack / Pinion) 415

FD-SB-6767
FORD
Galaxy I 377
SEAT
Alhambra 1081
VW
Sharan I 1467

FD-SB-6768
FORD
Mondeo I 391
Mondeo II 393

FD-SB-6787
FORD
Transit Connect - Tourneo Connect 409

FD-SB-6811
FORD
Fiesta V (2002 -> 2008) - Fusion 367
MAZDA
2 (-> 2007) [DY] 625

FD-SB-6812
FORD
Focus II (11/2004 ->) / Focus C-Max 373
Kuga 385

FD-SB-6813
FORD
Transit Connect - Tourneo Connect 409

FD-SB-7201
FORD
Mondeo III 395

FD-SB-7951
FORD
Mondeo I 391
Mondeo II 393

FD-SB-7952
FORD
Mondeo I 391
Mondeo II 393

FD-SB-7953
FORD
Mondeo I 391
Mondeo II 393

FD-SB-7973
FORD
Mondeo III 395
JAGUAR
X-Type 515

FD-SB-8091
FORD
Fiesta VI (2008 ->) 369
MAZDA
2 (11/2014 ->) [DJ, DL] 629
2 (2008 ->) [DE] 627

FD-SB-8092
FORD
B-Max 355
Fiesta VI (2008 ->) 369
MAZDA
2 (11/2014 ->) [DJ, DL] 629
2 (2008 ->) [DE] 627

FD-SB-8115
FORD
Fiesta V (2002 -> 2008) - Fusion 367
MAZDA
2 (-> 2007) [DY] 625

FD-SB-8467
FORD
B-Max 355
Fiesta VI (2008 ->) 369

FD-SB-8852
FORD
Ka II 383

FD-SB-8964
FORD
Cougar 359
Mondeo I 391
Mondeo II 393

FD-SB-8971
FORD
Kuga 385

FD-SB-9605
FORD
Fiesta IV (1995 -> 2001) - Fiesta Van / Courier (1996 ->) 365

...FD-SB-9605
Ka I 381
MAZDA
121 III (03/1996 ->) 641

FD-SB-9610
FORD
Scorpio II 405

FD-SB-9612
FORD
Transit III (Rack / Pinion) 415

FD-SB-9617
FORD
Fiesta IV (1995 -> 2001) - Fiesta Van / Courier (1996 ->) 365
Ka I 381
Puma 401
MAZDA
121 III (03/1996 ->) 641

FD-SB-9620
FORD
Escort V, VI, VII - Express (1990 ->) 363

FD-SB-9622
FORD
Escort V, VI, VII - Express (1990 ->) 363

FD-SB-9623
FORD
Mondeo III 395

FD-SB-9636
FORD
Ka I 381
Puma 401

FD-SB-9642
MAZDA
MX-5 II (05/1998 ->) 661

FD-SB-9652
FORD
Focus I (-> 11/2004) 371

FD-SB-9654
FORD
Focus I (-> 11/2004) 371

FD-SB-9656
FORD
Transit Connect - Tourneo Connect 409

FD-SB-9660
MAZDA
626 V [GF, GW] 647

FD-SB-9662
MAZDA
626 V [GF, GW] 647

FD-SB-9912
KIA
Shuma I 555

...FD-SB-9912
Shuma II 557

FD-TC-0951
FORD
Focus I (-> 11/2004) 371
Focus II (11/2004 ->) / Focus C-Max 373
MAZDA
3 (2003 -> 2009) [BK] 631
5 [CR19] 635
VOLVO
C30 (533) 1361
C70 II (2006 ->) 1363
S40 II (01/2004 ->) 1367
V50 1381

FD-TC-0952
FORD
Focus I (-> 11/2004) 371
Focus II (11/2004 ->) / Focus C-Max 373
MAZDA
3 (2003 -> 2009) [BK] 631
5 [CR19] 635
VOLVO
C30 (533) 1361
C70 II (2006 ->) 1363
S40 II (01/2004 ->) 1367
V50 1381

FD-TC-0954
FORD
Cougar 359
Mondeo I 391
Mondeo II 393

FD-TC-10175
FORD
Focus I (-> 11/2004) 371
Focus II (11/2004 ->) / Focus C-Max 373

FD-TC-12515
FORD
Galaxy II 379
Mondeo IV 397
S-Max 407

FD-TC-12698
FORD
Mondeo III 395

FD-TC-13347
FORD
C-Max II, Grand C-Max 357

FD-TC-13360
FORD
Mondeo III 395
JAGUAR
X-Type 515

FD-TC-13515
FORD
C-Max II, Grand C-Max 357

FD-TC-13605
FORD
C-Max II, Grand C-Max 357
Focus III (04/2011 ->) 375

FD-TC-13606
FORD
C-Max II, Grand C-Max 357
Focus III (04/2011 ->) 375

FD-TC-13762
FORD
C-Max II, Grand C-Max 357
Focus III (04/2011 ->) 375

FD-TC-14098
FORD
Kuga 385

FD-TC-15363
FORD
Mondeo V 399

FD-TC-15369
FORD
Mondeo III 395

FD-TC-5741
FORD
Galaxy II 379
Mondeo IV 397
S-Max 407
VOLVO
S60 II (134) 1371
S80 II 1377
V70 III (04/2007 ->) 1385
XC70 II (136) 1389

FD-TC-5742
FORD
Mondeo IV 397

FD-TC-7260
FORD
Focus I (-> 11/2004) 371
MAZDA
3 (2003 -> 2009) [BK] 631
VOLVO
S40 II (01/2004 ->) 1367
V50 1381

FD-TC-7992
FORD
Mondeo II 393

FD-TC-8849
FORD
Ka II 383

FD-TC-8850
FORD
Ka II 383

FD-WP-0162
FORD
Ka I 381

FD-WP-0163
FORD
Ka I 381

FD-WP-0403
FORD
Focus I (-> 11/2004) 371

FD-WP-0404
FORD
Focus I (-> 11/2004) 371

FD-WP-0715
FORD
Mondeo III 395
JAGUAR
X-Type 515

FD-WP-0716
FORD
Mondeo III 395
JAGUAR
X-Type 515

FD-WP-0721
FORD
Ka I 381

FD-WP-0722
FORD
Ka I 381

FD-WP-0738
FORD
Fiesta V (2002 -> 2008) - Fusion 367
MAZDA
2 (-> 2007) [DY] 625

FD-WP-0739
FORD
Fiesta V (2002 -> 2008) - Fusion 367
MAZDA
2 (-> 2007) [DY] 625

FD-WP-0843
FORD
Fiesta IV (1995 -> 2001) - Fiesta Van / Courier (1996 ->) 365

FD-WP-0844
FORD
Fiesta IV (1995 -> 2001) - Fiesta Van / Courier (1996 ->) 365

FD-WP-12507
FORD
C-Max II, Grand C-Max 357
Focus III (04/2011 ->) 375

FD-WP-12508
FORD
C-Max II, Grand C-Max 357
Focus III (04/2011 ->) 375

FD-WP-13615
FORD
B-Max 355

FD-WP-13616
FORD
B-Max 355

FD-WP-2047
FORD
Transit Connect - Tourneo Connect 409

FD-WP-2048
FORD
Transit Connect - Tourneo Connect 409

FD-WP-2524
FORD
Transit IV 417
Transit V 419

FD-WP-2525
FORD
Transit IV 417
Transit V 419

FD-WP-3313
FORD
Transit III (Rack / Pinion) 415

FD-WP-3314
FORD
Transit III (Rack / Pinion) 415

FD-WP-4126
FORD
Escort V, VI, VII - Express (1990 ->) 363

FD-WP-4127
FORD
Escort V, VI, VII - Express (1990 ->) 363

FD-WP-4139
FORD
Ka I 381

FD-WP-4140
FORD
Ka I 381

FD-WP-4141
FORD
Fiesta IV (1995 -> 2001) - Fiesta Van / Courier (1996 ->) 365
MAZDA
121 III (03/1996 ->) 641

FD-WP-4142
FORD
Fiesta IV (1995 -> 2001) - Fiesta Van / Courier (1996 ->) 365
MAZDA
121 III (03/1996 ->) 641

FD-WP-4143
FORD
Mondeo I 391

...FD-WP-4143
Mondeo II 393

FD-WP-4144
FORD
Mondeo I 391
Mondeo II 393

FD-WP-4149
FORD
Fiesta IV (1995 -> 2001) - Fiesta Van / Courier (1996 ->) 365
Puma 401
MAZDA
121 III (03/1996 ->) 641

FD-WP-4150
FORD
Fiesta IV (1995 -> 2001) - Fiesta Van / Courier (1996 ->) 365
Puma 401
MAZDA
121 III (03/1996 ->) 641

FD-WP-5112
FORD
Galaxy II 379
Mondeo IV 397
S-Max 407
VOLVO
S60 II (134) 1371
S80 II 1377
V70 III (04/2007 ->) 1385

FD-WP-5113
FORD
Galaxy II 379
Mondeo IV 397
S-Max 407
VOLVO
S60 II (134) 1371
S80 II 1377
V70 III (04/2007 ->) 1385

FD-WP-7997
FORD
Fiesta VI (2008 ->) 369
MAZDA
2 (11/2014 ->) [DJ, DL] 629
2 (2008 ->) [DE] 627

FD-WP-7998
FORD
Fiesta VI (2008 ->) 369
MAZDA
2 (11/2014 ->) [DJ, DL] 629
2 (2008 ->) [DE] 627

FD-WP-8949
FORD
Kuga 385

FD-WP-8950
FORD
Kuga 385

FI-AX-0086
FIAT
Barchetta 295
Punto I (-> 09/1999) 331
LANCIA
Y 595

FI-AX-0087
FIAT
Punto I (-> 09/1999) 331
LANCIA
Y 595

FI-AX-10827
FIAT
Doblo II 307

FI-AX-10883
FIAT
Sedici 343
SUZUKI
SX4 1215

FI-AX-1232
FIAT
Brava - Bravo I 297
Tempra - Tipo 349
LANCIA
Dedra 581
Delta II (1993 ->) 583

FI-AX-1461
FIAT
Coupé 301
Marea 321
Multipla 323

FI-AX-1751
FIAT
Palio - Siena 325

FI-AX-1839
FIAT
Punto II (09/1999 ->) 333

FI-AX-2503
FIAT
Bravo II (2007 ->) 299
Stilo 347
LANCIA
Delta III (2008 ->) 585

FI-AX-2504
FIAT
Doblo I 305

FI-AX-2518
FIAT
Palio - Siena 325

FI-AX-3120
FIAT
Brava - Bravo I 297
Tempra - Tipo 349
LANCIA
Dedra 581

FI-AX-3826
FIAT
Panda II [169_] 327

FI-AX-3853
FIAT
Fiorino (1988 ->) 313

FI-AX-3974
FIAT
Doblo I 305

FI-AX-4197
FIAT
Palio - Siena 325

FI-AX-4198
FIAT
Palio - Siena 325

FI-AX-4431
FIAT
Palio - Siena 325

FI-AX-4868
FIAT
Fiorino (1988 ->) 313

FI-AX-5092
FIAT
Idea 317
LANCIA
Musa 591

FI-AX-5156
FIAT
Sedici 343
SUZUKI
SX4 1215

FI-AX-5694
FIAT
500 (2007 ->) [312_] 289
FORD
Ka II 383

FI-AX-7508
FIAT
Seicento 345

FI-AX-7528
CITROËN
Jumper I / Relay I (02/1994 ->) [230, 244] 219
FIAT
Ducato II (03/1994 ->) 309
PEUGEOT
Boxer I 971

FI-BJ-0049
FIAT
Palio - Siena 325

FI-BJ-0512
CITROËN
Jumper I / Relay I (02/1994 ->) [230, 244] 219
FIAT
Ducato II (03/1994 ->) 309
PEUGEOT
Boxer I 971

FI-BJ-0513
CITROËN
Jumper I / Relay I (02/1994 ->) [230, 244] 219
FIAT
Ducato II (03/1994 ->) 309
PEUGEOT
Boxer I 971

FI-BJ-0936
FIAT
Doblo I 305

FI-BJ-13610
FIAT
Panda III [312_, 319_,519_] 329

FI-BJ-4174
FIAT
Doblo I 305

FI-BJ-4958
CITROËN
Jumper II / Relay II (04/2006 ->) 221
FIAT
Ducato III (07/2006 ->) 311
PEUGEOT
Boxer II 973

FI-BJ-5414
FIAT
Bravo II (2007 ->) 299
Stilo 347
LANCIA
Delta III (2008 ->) 585

FI-BJ-7517
ALFA ROMEO
GTV - Spider (09/1994 ->) 17

FI-BJ-7530
CITROËN
Jumper I / Relay I (02/1994 ->) [230, 244] 219
FIAT
Ducato II (03/1994 ->) 309
PEUGEOT
Boxer I 971

FI-BJ-7531
CITROËN
Jumper I / Relay I (02/1994 ->) [230, 244] 219
FIAT
Ducato II (03/1994 ->) 309
PEUGEOT
Boxer I 971

FI-BJ-8357
FIAT
500L 291
Doblo II 307

FI-ES-0241
FIAT
Doblo I 305

...FI-ES-0241
Palio - Siena 325

FI-ES-0242
FIAT
Doblo I 305
Palio - Siena 325

FI-ES-0261
LADA
Niva 577

FI-ES-0446
FIAT
Fiorino (1988 ->) 313

FI-ES-0937
FIAT
Bravo II (2007 ->) 299
Stilo 347
LANCIA
Delta III (2008 ->) 585

FI-ES-10933
CHRYSLER
Voyager IV [RG, RS] 175

FI-ES-12625
FIAT
Panda III [312_, 319_,519_] 329

FI-ES-14639
FIAT
500L 291

FI-ES-14640
FIAT
500L 291

FI-ES-15163
FIAT
500X 293
JEEP
Renegade [BU] 523

FI-ES-15164
FIAT
500X 293
JEEP
Renegade [BU] 523

FI-ES-2507
FIAT
Brava - Bravo I 297

FI-ES-2508
FIAT
Brava - Bravo I 297

FI-ES-2512
ALFA ROMEO
Alfa 145 - 146 (12/1996 ->) 3
GTV - Spider (09/1994 ->) 17
FIAT
Coupé 301
Doblo I 305

...FI-ES-2512
Marea 321
Multipla 323

FI-ES-2516
FIAT
500 (2007 ->) [312_] 289
Panda II [169_] 327
FORD
Ka II 383

FI-ES-2517
FIAT
500 (2007 ->) [312_] 289
Panda II [169_] 327
FORD
Ka II 383

FI-ES-3525
ALFA ROMEO
Alfa 145 - 146 (12/1996 ->) 3
FIAT
Marea 321
LANCIA
Lybra 589

FI-ES-4082
FIAT
Seicento 345

FI-ES-4675
ALFA ROMEO
Alfa 145 - 146 (12/1996 ->) 3
GTV - Spider (09/1994 ->) 17
FIAT
Brava - Bravo I 297
Coupé 301
Tempra - Tipo 349
LANCIA
Dedra 581
Delta II (1993 ->) 583

FI-ES-4676
ALFA ROMEO
Alfa 145 - 146 (12/1996 ->) 3
GTV - Spider (09/1994 ->) 17
FIAT
Brava - Bravo I 297
Coupé 301
Tempra - Tipo 349
LANCIA
Dedra 581
Delta II (1993 ->) 583

FI-ES-4684
FIAT
Barchetta 295
Punto I (-> 09/1999) 331
Punto II (09/1999 ->) 333
LANCIA
Y 595

FI-ES-5091
FIAT
Idea 317

...FI-ES-5091

LANCIA
Musa 591

FI-ES-5155

FIAT
Sedici 343
SUZUKI
SX4 1215

FI-ES-7529

CITROËN
Jumper I / Relay I (02/1994 ->) [230, 244] 219
FIAT
Ducato II (03/1994 ->) 309
PEUGEOT
Boxer I 971

FI-ES-8785

FIAT
Doblo II 307

FI-ES-8786

FIAT
Doblo II 307

FI-LS-0048

FIAT
Marea 321
Multipla 323
LANCIA
Dedra 581
Lybra 589

FI-LS-0441

ALFA ROMEO
Alfa 145 - 146 (->12/1996) 1
Alfa 145 - 146 (12/1996 ->) 3
GTV - Spider (09/1994 ->) 17
FIAT
Brava - Bravo I 297
Coupé 301
Tempra - Tipo 349
LANCIA
Dedra 581
Delta II (1993 ->) 583

FI-LS-10828

FIAT
Doblo II 307

FI-LS-14979

FIAT
500X 293
JEEP
Renegade [BU] 523

FI-LS-2111

FIAT
Doblo I 305

FI-LS-2371

FIAT
500 (2007 ->) [312_] 289

...FI-LS-2371

Bravo II (2007 ->) 299
Stilo 347
FORD
Ka II 383
LANCIA
Delta III (2008 ->) 585
Ypsilon 597

FI-LS-3830

FIAT
Panda II [169_] 327

FI-LS-4548

ALFA ROMEO
Giulietta (2010->) 15
Mito 19
FIAT
500L 291
Punto III (10/2005 ->) 335
OPEL
Corsa D 885
VAUXHALL
Corsa Mk III 1319

FI-LS-5159

FIAT
Sedici 343
SUZUKI
SX4 1215

FI-LS-8086

FIAT
Doblo II 307

FI-LS-8783

FIAT
Doblo I 305

FI-LS-8794

FIAT
Panda II [169_] 327

FI-RK-3591

FIAT
Barchetta 295
Punto I (-> 09/1999) 331
LANCIA
Y 595

FI-RK-3827

ALFA ROMEO
Alfa 145 - 146 (->12/1996) 1
Alfa 145 - 146 (12/1996 ->) 3
FIAT
Brava - Bravo I 297
Coupé 301
Marea 321
Multipla 323
Palio - Siena 325
Tempra - Tipo 349
LANCIA
Dedra 581
Delta II (1993 ->) 583

FI-RK-4006

FIAT
Seicento 345

FI-SB-10506

FIAT
Panda II [169_] 327

FI-SB-10509

FIAT
Panda II [169_] 327
Punto I (-> 09/1999) 331
Punto II (09/1999 ->) 333

FI-SB-10510

FIAT
Punto III (10/2005 ->) 335

FI-SB-10511

FIAT
500 (2007 ->) [312_] 289

FI-SB-10963

FIAT
500 (2007 ->) [312_] 289
Idea 317
Panda II [169_] 327
Punto II (09/1999 ->) 333
LANCIA
Musa 591
Ypsilon 597

FI-SB-1323

FIAT
Seicento 345

FI-SB-1324

FIAT
Barchetta 295
Punto I (-> 09/1999) 331
Seicento 345
LANCIA
Y 595

FI-SB-13283

IVECO
Daily I & II (01/1978 ->) 511

FI-SB-13284

IVECO
Daily I & II (01/1978 ->) 511

FI-SB-13285

IVECO
Daily I & II (01/1978 ->) 511

FI-SB-13286

IVECO
Daily I & II (01/1978 ->) 511

FI-SB-13373

FIAT
Bravo II (2007 ->) 299
Stilo 347
LANCIA
Delta III (2008 ->) 585

FI-SB-13488

ALFA ROMEO
Mito 19
FIAT
Punto III (10/2005 ->) 335

FI-SB-13613

FIAT
Panda III [312_, 319_,519_] 329

FI-SB-13614

FIAT
Panda III [312_, 319_,519_] 329

FI-SB-13672

FIAT
Doblo I 305

FI-SB-13721

FIAT
Panda II [169_] 327

FI-SB-1396

LANCIA
Dedra 581
Delta II (1993 ->) 583

FI-SB-14544

FIAT
Doblo I 305

FI-SB-14965

FIAT
500L 291
Doblo II 307

FI-SB-15400

FIAT
500X 293
JEEP
Renegade [BU] 523

FI-SB-15403

FIAT
500X 293
JEEP
Renegade [BU] 523

FI-SB-15440

FIAT
Croma II (2005 ->) 303
OPEL
Vectra C (2002 ->) 911
VAUXHALL
Signum 903
Vectra Mk II 1345

FI-SB-15441

FIAT
Croma II (2005 ->) 303
OPEL
Vectra C (2002 ->) 911
VAUXHALL
Signum 903

MOOG

...FI-SB-15441
Vectra Mk II 1345

FI-SB-1579
ALFA ROMEO
Alfa 145 - 146 (->12/1996) 1
Alfa 145 - 146 (12/1996 ->) 3
GTV - Spider (09/1994 ->) 17
FIAT
Brava - Bravo I 297
Coupé 301
Marea 321
Tempra - Tipo 349
LANCIA
Dedra 581
Delta II (1993 ->) 583

FI-SB-1585
ALFA ROMEO
Alfa 145 - 146 (->12/1996) 1
Alfa 145 - 146 (12/1996 ->) 3
GTV - Spider (09/1994 ->) 17
FIAT
Brava - Bravo I 297
Coupé 301
Marea 321

FI-SB-1586
FIAT
Tempra - Tipo 349
LANCIA
Dedra 581
Delta II (1993 ->) 583

FI-SB-1587
ALFA ROMEO
Alfa 145 - 146 (->12/1996) 1
Alfa 145 - 146 (12/1996 ->) 3
GTV - Spider (09/1994 ->) 17
FIAT
Brava - Bravo I 297
Coupé 301
Marea 321
Tempra - Tipo 349
LANCIA
Dedra 581
Delta II (1993 ->) 583

FI-SB-1589
FIAT
Barchetta 295
Punto I (-> 09/1999) 331
LANCIA
Y 595

FI-SB-1590
FIAT
Barchetta 295
Punto I (-> 09/1999) 331
LANCIA
Y 595

FI-SB-1596
ALFA ROMEO
Alfa 145 - 146 (->12/1996) 1

...FI-SB-1596
Alfa 145 - 146 (12/1996 ->) 3
GTV - Spider (09/1994 ->) 17
FIAT
Brava - Bravo I 297
Coupé 301
Marea 321

FI-SB-2207
FIAT
Punto II (09/1999 ->) 333

FI-SB-2208
FIAT
Punto II (09/1999 ->) 333

FI-SB-2505
FIAT
Doblo I 305
Palio - Siena 325

FI-SB-2510
FIAT
Stilo 347

FI-SB-2511
FIAT
Bravo II (2007 ->) 299
Stilo 347
LANCIA
Delta III (2008 ->) 585

FI-SB-2514
FIAT
Doblo I 305

FI-SB-2515
FIAT
Doblo I 305

FI-SB-2520
FIAT
Palio - Siena 325

FI-SB-2521
FIAT
Palio - Siena 325

FI-SB-2522
FIAT
Palio - Siena 325

FI-SB-2523
FIAT
Palio - Siena 325

FI-SB-3829
FIAT
Panda II [169_] 327

FI-SB-4454
FIAT
Barchetta 295
Palio - Siena 325
LANCIA
Y 595

FI-SB-4465
FIAT
Fiorino (1988 ->) 313

FI-SB-4538
FIAT
Fiorino (1988 ->) 313

FI-SB-5160
FIAT
Sedici 343
SUZUKI
SX4 1215

FI-SB-5161
FIAT
Sedici 343
SUZUKI
SX4 1215

FI-SB-5203
FIAT
Doblo I 305

FI-SB-5204
FIAT
Doblo I 305

FI-SB-5435
ALFA ROMEO
Mito 19
CITROËN
Nemo 227
FIAT
Fiorino (2008 ->) 315
Linea 319
Punto III (10/2005 ->) 335
Qubo 337
OPEL
Adam 857
Corsa D 885
PEUGEOT
Bipper 969
VAUXHALL
Adam 857
Corsa Mk III 1319

FI-SB-5439
ALFA ROMEO
Mito 19
CITROËN
Nemo 227
FIAT
Fiorino (2008 ->) 315
Linea 319
Punto III (10/2005 ->) 335
Qubo 337
PEUGEOT
Bipper 969

FI-SB-5697
FIAT
500 (2007 ->) [312_] 289

FI-SB-5698
FIAT
500 (2007 ->) [312_] 289

FI-SB-6622
FIAT
Barchetta 295

...FI-SB-6622
Punto I (-> 09/1999) 331

FI-SB-6623
FIAT
Barchetta 295
Punto I (-> 09/1999) 331

FI-SB-6624
FIAT
Barchetta 295
Punto I (-> 09/1999) 331

FI-SB-6626
FIAT
Barchetta 295
Doblo I 305
Punto I (-> 09/1999) 331
Punto II (09/1999 ->) 333

FI-SB-6627
ALFA ROMEO
Alfa 145 - 146 (->12/1996) 1
Alfa 145 - 146 (12/1996 ->) 3
FIAT
Brava - Bravo I 297
Coupé 301
Tempra - Tipo 349
LANCIA
Dedra 581
Delta II (1993 ->) 583

FI-SB-6763
FIAT
Ducato II (03/1994 ->) 309
LANCIA
Dedra 581

FI-SB-7758
FIAT
Multipla 323
LANCIA
Lybra 589

FI-SB-7759
FIAT
Multipla 323
LANCIA
Lybra 589

FI-SB-8781
FIAT
500L 291
Bravo II (2007 ->) 299
Stilo 347
LANCIA
Delta III (2008 ->) 585

FI-SB-8782
FIAT
Seicento 345

FI-SB-8787
FIAT
Fiorino (1988 ->) 313

FI-SB-8790
CITROËN
Nemo 227
FIAT
Fiorino (2008 ->) 315
Qubo 337
PEUGEOT
Bipper 969

FI-SB-8793
FIAT
Palio - Siena 325

FI-SB-8800
FIAT
Punto I (-> 09/1999) 331

FI-SB-8801
FIAT
Punto I (-> 09/1999) 331

FI-SB-8983
FIAT
500L 291
Doblo II 307

FI-SB-8984
FIAT
Doblo II 307

FI-SB-9678
FIAT
Punto I (-> 09/1999) 331

FI-SB-9693
ALFA ROMEO
Alfa 145 - 146 (->12/1996) 1
Alfa 145 - 146 (12/1996 ->) 3
FIAT
Brava - Bravo I 297
Coupé 301
Tempra - Tipo 349
LANCIA
Dedra 581
Delta II (1993 ->) 583

FI-SB-9694
ALFA ROMEO
Alfa 145 - 146 (->12/1996) 1
Alfa 145 - 146 (12/1996 ->) 3
FIAT
Brava - Bravo I 297
Coupé 301
Tempra - Tipo 349
LANCIA
Dedra 581
Delta II (1993 ->) 583

FI-TC-14075
FIAT
500L 291

FI-TC-14076
FIAT
500L 291

FI-TC-1620
FIAT
Fiorino (1988 ->) 313

FI-TC-1963
FIAT
Panda II [169_] 327

FI-TC-1964
FIAT
Panda II [169_] 327

FI-TC-2042
FIAT
Punto I (-> 09/1999) 331
LANCIA
Y 595

FI-TC-2045
FIAT
Punto I (-> 09/1999) 331
LANCIA
Y 595

FI-TC-2052
FIAT
Punto I (-> 09/1999) 331
LANCIA
Y 595

FI-TC-2053
FIAT
Punto I (-> 09/1999) 331
LANCIA
Y 595

FI-TC-4666
FIAT
Fiorino (1988 ->) 313

FI-TC-6564
FIAT
Barchetta 295
Punto I (-> 09/1999) 331

FI-TC-6565
FIAT
Barchetta 295
Punto I (-> 09/1999) 331

FI-TC-7412
FIAT
500 (2007 ->) [312_] 289

FI-TC-7413
FIAT
500 (2007 ->) [312_] 289

FI-TC-7522
FIAT
Seicento 345

FI-TC-7523
FIAT
Seicento 345

FI-TC-8871
CITROËN
Evasion / Synergie 217

...FI-TC-8871
Jumpy I / Dispatch I (06/1994 ->) 223
FIAT
Scudo I 339
Ulysse I (-> 08/2002) 351
LANCIA
Zeta 599
PEUGEOT
806 953
Expert I 975

FI-TC-8872
CITROËN
Evasion / Synergie 217
Jumpy I / Dispatch I (06/1994 ->) 223
FIAT
Scudo I 339
Ulysse I (-> 08/2002) 351
LANCIA
Zeta 599
PEUGEOT
806 953
Expert I 975

FI-TC-8873
FIAT
Stilo 347

FI-TC-8874
FIAT
Stilo 347

FI-TC-9057
FIAT
Stilo 347

FI-TC-9058
FIAT
Stilo 347

FI-WP-0108
CITROËN
Jumper I / Relay I (02/1994 ->) [230, 244] 219
FIAT
Ducato II (03/1994 ->) 309
PEUGEOT
Boxer I 971

FI-WP-0109
CITROËN
Jumper I / Relay I (02/1994 ->) [230, 244] 219
FIAT
Ducato II (03/1994 ->) 309
PEUGEOT
Boxer I 971

FI-WP-0110
CITROËN
Jumper I / Relay I (02/1994 ->) [230, 244] 219
FIAT
Ducato II (03/1994 ->) 309
PEUGEOT
Boxer I 971

FI-WP-0111
CITROËN
Jumper I / Relay I (02/1994 ->) [230, 244] 219
FIAT
Ducato II (03/1994 ->) 309
PEUGEOT
Boxer I 971

FI-WP-0118
CITROËN
Jumper I / Relay I (02/1994 ->) [230, 244] 219
FIAT
Ducato II (03/1994 ->) 309
PEUGEOT
Boxer I 971

FI-WP-0239
FIAT
Palio - Siena 325

FI-WP-0240
FIAT
Palio - Siena 325

FI-WP-0461
FIAT
Punto II (09/1999 ->) 333

FI-WP-0462
FIAT
Punto II (09/1999 ->) 333

FI-WP-0938
FIAT
Stilo 347

FI-WP-0939
FIAT
Stilo 347

FI-WP-0947
ALFA ROMEO
Alfa 145 - 146 (->12/1996) 1
Alfa 145 - 146 (12/1996 ->) 3
FIAT
Brava - Bravo I 297
Coupé 301
Marea 321
Multipla 323

FI-WP-0948
ALFA ROMEO
Alfa 145 - 146 (->12/1996) 1
Alfa 145 - 146 (12/1996 ->) 3
FIAT
Brava - Bravo I 297
Coupé 301
Marea 321
Multipla 323

FI-WP-13611
FIAT
Panda III [312_, 319_,519_] 329

MOOG

FI-WP-13612
FIAT
Panda III [312_, 319_,519_] 329

FI-WP-1462
FIAT
Multipla 323
LANCIA
Lybra 589

FI-WP-1463
FIAT
Multipla 323
LANCIA
Lybra 589

FI-WP-2109
FIAT
Doblo I 305

FI-WP-2110
FIAT
Doblo I 305

FI-WP-2509
FIAT
Palio - Siena 325

FI-WP-2519
FIAT
Palio - Siena 325

FI-WP-3840
CITROËN
Jumper I / Relay I (02/1994 ->) [230, 244] 219
FIAT
Ducato II (03/1994 ->) 309
PEUGEOT
Boxer I 971

FI-WP-3958
ALFA ROMEO
Mito 19
CITROËN
Nemo 227
FIAT
Fiorino (2008 ->) 315
Linea 319
Punto III (10/2005 ->) 335
Qubo 337
PEUGEOT
Bipper 969

FI-WP-3959
ALFA ROMEO
Mito 19
CITROËN
Nemo 227
FIAT
Fiorino (2008 ->) 315
Linea 319
Punto III (10/2005 ->) 335
Qubo 337

...FI-WP-3959
PEUGEOT
Bipper 969

FI-WP-4172
FIAT
Doblo I 305
Palio - Siena 325

FI-WP-4173
FIAT
Doblo I 305
Palio - Siena 325

FI-WP-5157
FIAT
Sedici 343
SUZUKI
SX4 1215

FI-WP-5158
FIAT
Sedici 343
SUZUKI
SX4 1215

FI-WP-5201
FIAT
Doblo I 305

FI-WP-5202
FIAT
Doblo I 305

FI-WP-5692
FIAT
Stilo 347

FI-WP-5693
FIAT
Stilo 347

FI-WP-7420
FIAT
Bravo II (2007 ->) 299
Stilo 347
LANCIA
Delta III (2008 ->) 585

FI-WP-7421
FIAT
Bravo II (2007 ->) 299
Stilo 347
LANCIA
Delta III (2008 ->) 585

FI-WP-7503
FIAT
Brava - Bravo I 297
Tempra - Tipo 349
LANCIA
Dedra 581
Delta II (1993 ->) 583

FI-WP-7504
FIAT
Brava - Bravo I 297

...FI-WP-7504
Tempra - Tipo 349
LANCIA
Dedra 581
Delta II (1993 ->) 583

FI-WP-7524
FIAT
Punto I (-> 09/1999) 331
LANCIA
Y 595

FI-WP-7525
FIAT
Punto I (-> 09/1999) 331
LANCIA
Y 595

FI-WP-8475
FIAT
Doblo II 307

FI-WP-8476
FIAT
Doblo II 307

HO-AX-10125
HONDA
Accord VIII (2008 ->) 427

HO-AX-10513
HONDA
Jazz III (11/2008 ->) [GE_, GG_, GP_] 451

HO-AX-12633
HONDA
Jazz II (03/2002 ->) 449

HO-AX-12634
HONDA
Jazz II (03/2002 ->) 449

HO-AX-13311
HONDA
Civic VIII Hatchback 435
Civic VIII Saloon 437

HO-AX-14642
HONDA
CRV IV (01/2012 ->) 445

HO-AX-1625
HONDA
Civic V (1991 -> 1996) - CRX III (1992 -> 1998) 429
Civic VI (1994 -> 2001) 431
ROVER
400 (05/1995 ->) 1069
45 1059

HO-AX-1781
HONDA
Accord V (1993 -> 1998) 421
ROVER
600 1071

HO-AX-2538
HONDA
Accord V (1993 -> 1998) 421

HO-AX-2569
HONDA
CRV I (10/1995 ->) 439

HO-AX-2580
HONDA
Jazz II (03/2002 ->) 449

HO-AX-2581
HONDA
Jazz II (03/2002 ->) 449

HO-AX-2589
HONDA
HR-V 447

HO-AX-3844
HONDA
Civic VII (2001 ->) 433

HO-AX-5075
HONDA
Accord VII (2003 ->2008) 425

HO-AX-5447
HONDA
Accord VI (1998 ->2003) 423

HO-AX-5528
HONDA
CRV II (09/2001 ->) 441

HO-AX-8738
HONDA
CRV III (09/2006 ->) 443

HO-BJ-0167
HONDA
Civic V (1991 -> 1996) - CRX III (1992 -> 1998) 429
Civic VI (1994 -> 2001) 431
CRV I (10/1995 ->) 439
MG
MG ZS 753
ROVER
400 (05/1995 ->) 1069
45 1059

HO-BJ-10126
HONDA
Accord VIII (2008 ->) 427

HO-BJ-10439
HONDA
Civic VIII Saloon 437

HO-BJ-10440
HONDA
Civic VIII Saloon 437

HO-BJ-10556
HONDA
CRV II (09/2001 ->) 441

HO-BJ-10683
HONDA
Accord VII (2003 ->2008) 425

HO-BJ-10747
HONDA
Jazz III (11/2008 ->) [GE_, GG_, GP_] 451

HO-BJ-10953
HONDA
Accord VII (2003 ->2008) 425

HO-BJ-14808
HONDA
Civic VIII Saloon 437

HO-BJ-3290
HONDA
Accord VI (1998 ->2003) 423

HO-BJ-4919
HONDA
Jazz II (03/2002 ->) 449

HO-BJ-6619
HONDA
Civic VII (2001 ->) 433

HO-BJ-8094
HONDA
CRV III (09/2006 ->) 443

HO-ES-0170
HONDA
Civic V (1991 -> 1996) - CRX III (1992 -> 1998) 429
Civic VI (1994 -> 2001) 431
CRV I (10/1995 ->) 439
MG
MG ZS 753
ROVER
400 (05/1995 ->) 1069
45 1059

HO-ES-0171
HONDA
Civic V (1991 -> 1996) - CRX III (1992 -> 1998) 429
Civic VI (1994 -> 2001) 431
CRV I (10/1995 ->) 439
MG
MG ZS 753
ROVER
400 (05/1995 ->) 1069
45 1059

HO-ES-10515
HONDA
Jazz III (11/2008 ->) [GE_, GG_, GP_] 451

HO-ES-10516
HONDA
Jazz III (11/2008 ->) [GE_, GG_, GP_] 451

HO-ES-13261
HONDA
Civic VIII Saloon 437

HO-ES-13262
HONDA
Civic VIII Saloon 437

HO-ES-14809
HONDA
CRV IV (01/2012 ->) 445

HO-ES-14810
HONDA
CRV IV (01/2012 ->) 445

HO-ES-2547
HONDA
Civic VII (2001 ->) 433
CRV II (09/2001 ->) 441

HO-ES-2554
HONDA
Accord VI (1998 ->2003) 423

HO-ES-2555
HONDA
Accord VI (1998 ->2003) 423

HO-ES-2575
HONDA
HR-V 447

HO-ES-2582
HONDA
Jazz II (03/2002 ->) 449

HO-ES-2583
HONDA
Jazz II (03/2002 ->) 449

HO-ES-5073
HONDA
Accord VII (2003 ->2008) 425

HO-ES-5074
HONDA
Accord VII (2003 ->2008) 425

HO-ES-5728
HONDA
Civic VIII Hatchback 435

HO-ES-5729
HONDA
Civic VIII Hatchback 435

HO-ES-7048
HONDA
Civic VIII Hatchback 435

HO-ES-7049
HONDA
Civic VIII Hatchback 435

HO-ES-8096
HONDA
CRV III (09/2006 ->) 443

HO-LS-10098
HONDA
HR-V 447

HO-LS-10099
HONDA
HR-V 447

HO-LS-10121
HONDA
Accord VIII (2008 ->) 427

HO-LS-10122
HONDA
Accord VIII (2008 ->) 427

HO-LS-10514
HONDA
Jazz III (11/2008 ->) [GE_, GG_, GP_] 451

HO-LS-10517
HONDA
Civic VIII Saloon 437

HO-LS-10518
HONDA
Civic VIII Saloon 437

HO-LS-13433
HONDA
Accord VII (2003 ->2008) 425

HO-LS-13697
HONDA
Accord VIII (2008 ->) 427

HO-LS-13698
HONDA
Accord VIII (2008 ->) 427

HO-LS-1605
HONDA
Civic VI (1994 -> 2001) 431

HO-LS-1710
HONDA
Civic V (1991 -> 1996) - CRX III (1992 -> 1998) 429
CRV I (10/1995 ->) 439

HO-LS-1741
HONDA
Civic V (1991 -> 1996) - CRX III (1992 -> 1998) 429

HO-LS-1742
HONDA
Civic V (1991 -> 1996) - CRX III (1992 -> 1998) 429

HO-LS-1840
HONDA
Accord VI (1998 ->2003) 423
Accord VII (2003 ->2008) 425

HO-LS-1842
HONDA
Accord VI (1998 ->2003) 423
Accord VII (2003 ->2008) 425

HO-LS-2568
HONDA
CRV I (10/1995 ->) 439

HO-LS-2578
HONDA
Jazz II (03/2002 ->) 449

HO-LS-2579
HONDA
Jazz II (03/2002 ->) 449

HO-LS-2587
HONDA
HR-V 447

HO-LS-2588
HONDA
HR-V 447

HO-LS-2594
HONDA
Civic VII (2001 ->) 433
CRV II (09/2001 ->) 441

HO-LS-2595
HONDA
Civic VII (2001 ->) 433
CRV II (09/2001 ->) 441

HO-LS-3824
HONDA
Accord VI (1998 ->2003) 423

HO-LS-3825
HONDA
Accord VI (1998 ->2003) 423

HO-LS-4192
HONDA
CRV I (10/1995 ->) 439

HO-LS-4549
HONDA
CRV II (09/2001 ->) 441

HO-LS-4550
HONDA
CRV II (09/2001 ->) 441

HO-LS-4632
HONDA
Accord VII (2003 ->2008) 425

HO-LS-4687
HONDA
Accord VII (2003 ->2008) 425

HO-LS-5725
HONDA
Civic VII (2001 ->) 433

HO-LS-5726
HONDA
Civic VII (2001 ->) 433

HO-LS-5727
HONDA
Civic VIII Hatchback 435

HO-LS-7899
HONDA
Civic VIII Hatchback 435
Civic VIII Saloon 437

HO-LS-7900
HONDA
Civic VIII Hatchback 435

MOOG

...HO-LS-7900
Civic VIII Saloon 437

HO-LS-7941
HONDA
CRV III (09/2006 ->) 443
CRV IV (01/2012 ->) 445

HO-LS-7942
HONDA
CRV III (09/2006 ->) 443
CRV IV (01/2012 ->) 445

HO-LS-7943
HONDA
CRV III (09/2006 ->) 443
CRV IV (01/2012 ->) 445

HO-LS-8942
HONDA
Accord V (1993 -> 1998) 421
ROVER
600 1071

HO-LS-8967
HONDA
Jazz II (03/2002 ->) 449

HO-LS-8968
HONDA
Jazz II (03/2002 ->) 449

HO-SB-10072
HONDA
Civic VIII Saloon 437

HO-SB-10073
HONDA
Accord VII (2003 ->2008) 425
Accord VIII (2008 ->) 427

HO-SB-10436
HONDA
Accord VII (2003 ->2008) 425
Accord VIII (2008 ->) 427

HO-SB-10786
HONDA
Jazz III (11/2008 ->) 451
[GE_, GG_, GP_]

HO-SB-10787
HONDA
Jazz III (11/2008 ->) 451
[GE_, GG_, GP_]

HO-SB-10788
HONDA
Jazz III (11/2008 ->) 451
[GE_, GG_, GP_]

HO-SB-10956
HONDA
Civic VII (2001 ->) 433

HO-SB-10966
HONDA
Jazz II (03/2002 ->) 449

...HO-SB-10966
Jazz III (11/2008 ->) 451
[GE_, GG_, GP_]

HO-SB-10967
HONDA
CRV III (09/2006 ->) 443

HO-SB-12648
HONDA
Civic VI (1994 -> 2001) 431

HO-SB-12651
HONDA
Civic VI (1994 -> 2001) 431

HO-SB-12669
HONDA
CRV II (09/2001 ->) 441

HO-SB-13258
HONDA
Civic V (1991 -> 1996) 429
- CRX III (1992 -> 1998)

HO-SB-13430
HONDA
Accord VI (1998 ->2003) 423

HO-SB-13434
HONDA
Civic V (1991 -> 1996) 429
- CRX III (1992 -> 1998)

HO-SB-13588
HONDA
Civic VIII Hatchback 435
Civic VIII Saloon 437

HO-SB-13591
HONDA
Civic VIII Hatchback 435
Civic VIII Saloon 437

HO-SB-1370
HONDA
Accord V (1993 -> 1998) 421
ROVER
600 1071

HO-SB-1371
HONDA
Accord V (1993 -> 1998) 421
Accord VI (1998 ->2003) 423

HO-SB-14064
HONDA
Accord VIII (2008 ->) 427

HO-SB-14648
HONDA
Accord VIII (2008 ->) 427

HO-SB-14743
HONDA
CRV III (09/2006 ->) 443

HO-SB-15232
HONDA
Civic VIII Saloon 437

HO-SB-15647
HONDA
CRV II (09/2001 ->) 441

HO-SB-1858
HONDA
Civic VI (1994 -> 2001) 431
MG
MG ZR 751
MG ZS 753
ROVER
200 (10/1989 ->) 1065
- Coupé - Cabriolet [XW - RF]
25 - Streetwise 1057
400 1067
(-> 04/1995) - 400 Tourer
400 (05/1995 ->) 1069
45 1059

HO-SB-2342
HONDA
Civic VI (1994 -> 2001) 431
ROVER
400 (05/1995 ->) 1069
45 1059

HO-SB-2540
HONDA
Civic V (1991 -> 1996) 429
- CRX III (1992 -> 1998)

HO-SB-2541
HONDA
Civic V (1991 -> 1996) 429
- CRX III (1992 -> 1998)

HO-SB-2542
HONDA
Civic V (1991 -> 1996) 429
- CRX III (1992 -> 1998)

HO-SB-2552
HONDA
Civic VII (2001 ->) 433
CRV II (09/2001 ->) 441

HO-SB-2553
HONDA
Civic VII (2001 ->) 433
CRV II (09/2001 ->) 441

HO-SB-2560
HONDA
Accord VI (1998 ->2003) 423

HO-SB-2561
HONDA
Accord VI (1998 ->2003) 423

HO-SB-2573
HONDA
Civic V (1991 -> 1996) 429
- CRX III (1992 -> 1998)
CRV I (10/1995 ->) 439

HO-SB-3979
HONDA
Accord V (1993 -> 1998) 421

...HO-SB-3979
ROVER
600 1071

HO-SB-4043
HONDA
Accord V (1993 -> 1998) 421
ROVER
600 1071

HO-SB-4460
HONDA
Civic VI (1994 -> 2001) 431

HO-SB-6714
HONDA
Civic VI (1994 -> 2001) 431

HO-SB-6715
HONDA
Civic VI (1994 -> 2001) 431

HO-SB-6718
HONDA
CRV I (10/1995 ->) 439

HO-SB-6719
HONDA
Civic V (1991 -> 1996) 429
- CRX III (1992 -> 1998)

HO-SB-6724
HONDA
Accord V (1993 -> 1998) 421
ROVER
600 1071

HO-SB-6852
HONDA
Accord VII (2003 ->2008) 425
Accord VIII (2008 ->) 427

HO-SB-6853
HONDA
Accord VI (1998 ->2003) 423
Accord VII (2003 ->2008) 425
Accord VIII (2008 ->) 427

HO-SB-7945
HONDA
Civic VII (2001 ->) 433

HO-SB-8099
HONDA
CRV III (09/2006 ->) 443

HO-SB-8479
HONDA
Civic VI (1994 -> 2001) 431
MG
MG ZS 753
ROVER
400 (05/1995 ->) 1069
45 1059

HO-SB-8952
HONDA
Accord VII (2003 ->2008) 425

...HO-SB-8952
Accord VIII (2008 ->) 427

HO-SB-8955
HONDA
Accord VII (2003 ->2008) 425
Accord VIII (2008 ->) 427

HO-SB-8956
HONDA
Accord VII (2003 ->2008) 425
Accord VIII (2008 ->) 427

HO-SB-9730
HONDA
Accord VI (1998 ->2003) 423
Accord VII (2003 ->2008) 425
Accord VIII (2008 ->) 427
Civic VI (1994 -> 2001) 431

HO-SB-9740
HONDA
Civic VII (2001 ->) 433
CRV II (09/2001 ->) 441

HO-SB-9750
HONDA
Civic V (1991 -> 1996) - CRX III (1992 -> 1998) 429
Civic VI (1994 -> 2001) 431
CRV I (10/1995 ->) 439

HO-SB-9752
HONDA
Civic V (1991 -> 1996) - CRX III (1992 -> 1998) 429
Civic VI (1994 -> 2001) 431
CRV I (10/1995 ->) 439

HO-SB-9756
HONDA
Accord VI (1998 ->2003) 423

HO-SB-9758
HONDA
Accord VI (1998 ->2003) 423
Accord VII (2003 ->2008) 425
Accord VIII (2008 ->) 427

HO-SB-9760
HONDA
Accord V (1993 -> 1998) 421
Accord VI (1998 ->2003) 423
Accord VII (2003 ->2008) 425
Accord VIII (2008 ->) 427
Civic V (1991 -> 1996) - CRX III (1992 -> 1998) 429
Civic VI (1994 -> 2001) 431
CRV I (10/1995 ->) 439
ROVER
200 (10/1989 ->) - Coupé - Cabriolet [XW - RF] 1065
400 (-> 04/1995) - 400 Tourer 1067
400 (05/1995 ->) 1069
600 1071

HO-SB-9762
HONDA
Accord V (1993 -> 1998) 421
ROVER
600 1071

HO-SB-9766
HONDA
Civic VII (2001 ->) 433
CRV II (09/2001 ->) 441
CRV III (09/2006 ->) 443

HO-SB-9768
HONDA
Civic VII (2001 ->) 433

HO-TC-13233
HONDA
CRV III (09/2006 ->) 443
CRV IV (01/2012 ->) 445

HO-TC-4042
HONDA
Accord VI (1998 ->2003) 423

HO-TC-5071
HONDA
Accord VII (2003 ->2008) 425

HO-TC-5072
HONDA
Accord VII (2003 ->2008) 425

HO-WP-0165
HONDA
Civic VI (1994 -> 2001) 431
MG
MG ZS 753
ROVER
400 (05/1995 ->) 1069
45 1059

HO-WP-0166
HONDA
Civic VI (1994 -> 2001) 431
MG
MG ZS 753
ROVER
400 (05/1995 ->) 1069
45 1059

HO-WP-0322
HONDA
Accord V (1993 -> 1998) 421
ROVER
600 1071

HO-WP-0323
HONDA
Accord V (1993 -> 1998) 421
ROVER
600 1071

HO-WP-0439
HONDA
Accord V (1993 -> 1998) 421

HO-WP-0440
HONDA
Accord V (1993 -> 1998) 421

HO-WP-0823
HONDA
Accord VI (1998 ->2003) 423

HO-WP-0824
HONDA
Accord VI (1998 ->2003) 423

HO-WP-0965
HONDA
Civic V (1991 -> 1996) - CRX III (1992 -> 1998) 429

HO-WP-0966
HONDA
Civic V (1991 -> 1996) - CRX III (1992 -> 1998) 429

HO-WP-10789
HONDA
Jazz III (11/2008 ->) [GE_, GG_, GP_] 451

HO-WP-10790
HONDA
Jazz III (11/2008 ->) [GE_, GG_, GP_] 451

HO-WP-10829
HONDA
Accord VIII (2008 ->) 427

HO-WP-10830
HONDA
Accord VIII (2008 ->) 427

HO-WP-1804
HONDA
Civic V (1991 -> 1996) - CRX III (1992 -> 1998) 429

HO-WP-1805
HONDA
Civic V (1991 -> 1996) - CRX III (1992 -> 1998) 429

HO-WP-2536
HONDA
Civic V (1991 -> 1996) - CRX III (1992 -> 1998) 429

HO-WP-2537
HONDA
Civic V (1991 -> 1996) - CRX III (1992 -> 1998) 429

HO-WP-2548
HONDA
Civic VII (2001 ->) 433

HO-WP-2549
HONDA
Civic VII (2001 ->) 433

HO-WP-2564
HONDA
Accord V (1993 -> 1998) 421

HO-WP-2565
HONDA
Accord V (1993 -> 1998) 421

HO-WP-2566
HONDA
CRV I (10/1995 ->) 439

HO-WP-2567
HONDA
CRV I (10/1995 ->) 439

HO-WP-2576
HONDA
Jazz II (03/2002 ->) 449

HO-WP-2577
HONDA
Jazz II (03/2002 ->) 449

HO-WP-2592
HONDA
CRV II (09/2001 ->) 441

HO-WP-2593
HONDA
CRV II (09/2001 ->) 441

HO-WP-5069
HONDA
Accord VII (2003 ->2008) 425

HO-WP-5070
HONDA
Accord VII (2003 ->2008) 425

HO-WP-8097
HONDA
CRV III (09/2006 ->) 443

HO-WP-8098
HONDA
CRV III (09/2006 ->) 443

HY-AX-0009
HYUNDAI
Atos 461

HY-AX-0969
HYUNDAI
Accent II (01/2000 ->) [LC] 455
H100 477

HY-AX-0971
HYUNDAI
Atos 461

HY-AX-10587
HYUNDAI
Sonata V 501

HY-AX-10810
HYUNDAI
ix35 [LM, EL] 487
KIA
Sportage III (07/2010 ->) [SL] 567

HY-AX-13278
HYUNDAI
Accent IV (02/2010 ->) [RB] 459

HY-AX-14980
HYUNDAI
i20 (11/2014 ->) [GB] 483

HY-AX-15338
HYUNDAI
Accent IV (02/2010 ->) [RB] 459

HY-AX-1718
HYUNDAI
Coupé (-> 2002) 463
Lantra II (11/1995 ->) 489

HY-AX-1818
HYUNDAI
Sonata III 497

HY-AX-1819
HYUNDAI
Sonata IV 499

HY-AX-1820
HYUNDAI
Accent I (-> 01/2000) [X-3] 453

HY-AX-2432
HYUNDAI
Santa Fé II 495

HY-AX-2615
HYUNDAI
Accent II (01/2000 ->) [LC] 455
H100 477

HY-AX-2620
HYUNDAI
Coupé (2002 ->) 465
Elantra 467
KIA
Cerato [LD] 537

HY-AX-2628
HYUNDAI
Santa Fé I 493
Santa Fé II 495

HY-AX-2632
HYUNDAI
Matrix 491

HY-AX-2637
HYUNDAI
Trajet - Highway Van 505

HY-AX-2646
HYUNDAI
Getz 471

HY-AX-3892
HYUNDAI
Tucson (08/2004 ->) [JM] 507
KIA
Sportage II (09/2004 ->) [JE_, KM] 565

HY-AX-7080
HYUNDAI
Accent III (11/2005 ->) [MC] 457

...HY-AX-7080
KIA
Rio II 551

HY-AX-7293
HYUNDAI
H-1 / Starex 473

HY-AX-8358
HYUNDAI
i10 (10/2007 ->) 479

HY-AX-8894
HYUNDAI
i20 (08/2008 ->) [PB_] 481

HY-AX-8897
HYUNDAI
H-1 [TQ] 475

HY-AX-8898
HYUNDAI
H-1 [TQ] 475

HY-BJ-10599
HYUNDAI
Terracan [HP] 503

HY-BJ-10600
HYUNDAI
Trajet - Highway Van 505

HY-BJ-10813
HYUNDAI
ix35 [LM, EL] 487
KIA
Sportage III (07/2010 ->) [SL] 567

HY-BJ-1190
HYUNDAI
Sonata III 497

HY-BJ-1214
HYUNDAI
H-1 / Starex 473
H100 477
MITSUBISHI
L300 II (2WD) 783

HY-BJ-1607
HYUNDAI
H-1 / Starex 473

HY-BJ-1614
HYUNDAI
Atos 461

HY-BJ-1658
HYUNDAI
Galloper II 469
MITSUBISHI
Galloper 775

HY-BJ-2596
HYUNDAI
Terracan [HP] 503

HY-BJ-2629
HYUNDAI
Santa Fé I 493
Santa Fé II 495

HY-BJ-2642
HYUNDAI
Trajet - Highway Van 505

HY-BJ-2662
HYUNDAI
Sonata IV 499

HY-BJ-3977
HYUNDAI
Tucson (08/2004 ->) [JM] 507
KIA
Sportage II (09/2004 ->) [JE_, KM] 565

HY-BJ-4747
HYUNDAI
Sonata V 501

HY-BJ-4749
HYUNDAI
Accent III (11/2005 ->) [MC] 457
KIA
Rio II 551

HY-DS-10598
HYUNDAI
Terracan [HP] 503

HY-DS-1771
HYUNDAI
Galloper II 469
MITSUBISHI
Galloper 775

HY-ES-0172
HYUNDAI
Accent I (-> 01/2000) [X-3] 453
Accent II (01/2000 ->) [LC] 455
Coupé (-> 2002) 463
Coupé (2002 ->) 465
Elantra 467
Lantra II (11/1995 ->) 489
Matrix 491
Sonata III 497
Trajet - Highway Van 505
KIA
Cerato [LD] 537
MITSUBISHI
Galant V & VI (1992 ->) 773
Pajero Pinin 799
Space Wagon - Space Runner (1999 ->) 803

HY-ES-10811
HYUNDAI
ix35 [LM, EL] 487
KIA
Sportage III (07/2010 ->) [SL] 567

HY-ES-10812
HYUNDAI
ix35 [LM, EL] 487
KIA
Sportage III (07/2010 ->) [SL] 567

HY-ES-1163
HYUNDAI
H100 477

HY-ES-13701
HYUNDAI
Accent IV (02/2010 ->) [RB] 459

HY-ES-13702
HYUNDAI
Accent IV (02/2010 ->) [RB] 459

HY-ES-14981
HYUNDAI
i20 (11/2014 ->) [GB] 483

HY-ES-14982
HYUNDAI
i20 (11/2014 ->) [GB] 483

HY-ES-1637
HYUNDAI
Atos 461

HY-ES-1705
HYUNDAI
Accent I (-> 01/2000) [X-3] 453

HY-ES-1906
HYUNDAI
Getz 471
Santa Fé I 493
Santa Fé II 495
Trajet - Highway Van 505

HY-ES-2617
HYUNDAI
Sonata IV 499

HY-ES-2618
HYUNDAI
Sonata IV 499

HY-ES-3886
HYUNDAI
Tucson (08/2004 ->) [JM] 507
KIA
Sportage II (09/2004 ->) [JE_, KM] 565

HY-ES-3887
HYUNDAI
Tucson (08/2004 ->) [JM] 507
KIA
Sportage II (09/2004 ->) [JE_, KM] 565

HY-ES-4879
HYUNDAI
Sonata V 501

HY-ES-4880
HYUNDAI
Sonata V 501

HY-ES-4881
HYUNDAI
Accent III (11/2005 ->) [MC] 457
KIA
Rio II 551

HY-ES-4882
HYUNDAI
Accent III (11/2005 ->) [MC] 457
KIA
Rio II 551

HY-ES-4938
HYUNDAI
Santa Fé II 495

HY-ES-4939
HYUNDAI
Santa Fé II 495

HY-ES-7092
HYUNDAI
i30 (10/2007 ->) [FD] 485
KIA
Cee'd (12/2006 ->) [ED] 535

HY-ES-7093
HYUNDAI
i30 (10/2007 ->) [FD] 485
KIA
Cee'd (12/2006 ->) [ED] 535

HY-ES-8856
HYUNDAI
i10 (10/2007 ->) 479

HY-LS-0971
HYUNDAI
Atos 461

HY-LS-10113
HYUNDAI
Accent II (01/2000 ->) [LC] 455

HY-LS-10519
HYUNDAI
ix35 [LM, EL] 487
KIA
Sportage III (07/2010 ->) [SL] 567

HY-LS-10588
HYUNDAI
Sonata V 501

HY-LS-10595
HYUNDAI
Terracan [HP] 503

HY-LS-10596
HYUNDAI
Terracan [HP] 503

HY-LS-10597
HYUNDAI
Terracan [HP] 503

HY-LS-10809
HYUNDAI
ix35 [LM, EL] 487
KIA
Sportage III (07/2010 ->) [SL] 567

HY-LS-13297
HYUNDAI
Accent IV (02/2010 ->) [RB] 459

HY-LS-13305
HYUNDAI
ix35 [LM, EL] 487
KIA
Sportage III (07/2010 ->) [SL] 567

HY-LS-13467
HYUNDAI
i10 (10/2007 ->) 479

HY-LS-13468
HYUNDAI
i10 (10/2007 ->) 479

HY-LS-14801
HYUNDAI
ix35 [LM, EL] 487
KIA
Sportage III (07/2010 ->) [SL] 567

HY-LS-14946
HYUNDAI
i20 (11/2014 ->) [GB] 483

HY-LS-1833
HYUNDAI
Accent II (01/2000 ->) [LC] 455
Matrix 491

HY-LS-1845
HYUNDAI
Coupé (-> 2002) 463
Lantra II (11/1995 ->) 489

HY-LS-1910
HYUNDAI
Getz 471

HY-LS-1911
HYUNDAI
Getz 471

HY-LS-2233
HYUNDAI
Accent II (01/2000 ->) [LC] 455
Matrix 491

HY-LS-2380
HYUNDAI
Atos 461

...HY-LS-2380
Coupé (-> 2002) 463
Elantra 467
Lantra II (11/1995 ->) 489

HY-LS-2610
HYUNDAI
Sonata III 497

HY-LS-2616
HYUNDAI
Sonata III 497
MITSUBISHI
Galant V & VI (1992 ->) 773

HY-LS-2625
HYUNDAI
Santa Fé I 493
Santa Fé II 495

HY-LS-2626
HYUNDAI
Santa Fé I 493
Santa Fé II 495

HY-LS-2638
HYUNDAI
Trajet - Highway Van 505

HY-LS-2639
HYUNDAI
Trajet - Highway Van 505

HY-LS-2649
HYUNDAI
Elantra 467

HY-LS-2652
HYUNDAI
Sonata IV 499

HY-LS-2667
HYUNDAI
Sonata III 497

HY-LS-3937
HYUNDAI
Sonata IV 499

HY-LS-3938
HYUNDAI
Sonata IV 499

HY-LS-3940
HYUNDAI
Tucson (08/2004 ->) [JM] 507
KIA
Sportage II (09/2004 ->) [JE_, KM] 565

HY-LS-3941
HYUNDAI
Tucson (08/2004 ->) [JM] 507
KIA
Sportage II (09/2004 ->) [JE_, KM] 565

HY-LS-3998
HYUNDAI
H-1 / Starex 473

HY-LS-3999
HYUNDAI
H-1 / Starex 473

HY-LS-4688
HYUNDAI
Santa Fé I 493
Santa Fé II 495

HY-LS-4689
HYUNDAI
Santa Fé I 493
Santa Fé II 495

HY-LS-4690
HYUNDAI
Coupé (2002 ->) 465

HY-LS-4691
HYUNDAI
Coupé (2002 ->) 465

HY-LS-4748
HYUNDAI
Sonata V 501

HY-LS-4942
HYUNDAI
Santa Fé II 495

HY-LS-4943
HYUNDAI
Santa Fé II 495

HY-LS-4944
HYUNDAI
Santa Fé II 495

HY-LS-7068
HYUNDAI
Accent I (-> 01/2000) [X-3] 453

HY-LS-7081
HYUNDAI
Accent III (11/2005 ->) [MC] 457
KIA
Rio II 551

HY-LS-7082
HYUNDAI
Accent III (11/2005 ->) [MC] 457
KIA
Rio II 551

HY-LS-7936
HYUNDAI
i20 (08/2008 ->) [PB_] 481
KIA
Venga [YN] 569

HY-LS-7937
HYUNDAI
i20 (08/2008 ->) [PB_] 481
KIA
Venga [YN] 569

HY-LS-8896
HYUNDAI
i30 (10/2007 ->) [FD] 485
KIA
Cee'd (12/2006 ->) [ED] 535

HY-LS-8907
HYUNDAI
H-1 [TQ] 475

HY-LS-8908
HYUNDAI
H-1 [TQ] 475

HY-LS-8911
HYUNDAI
H-1 [TQ] 475

HY-LS-8912
HYUNDAI
H-1 [TQ] 475

HY-SB-10075
HYUNDAI
Sonata V 501

HY-SB-10559
HYUNDAI
Accent I (-> 01/2000) [X-3] 453
Atos 461

HY-SB-10560
HYUNDAI
Accent I (-> 01/2000) [X-3] 453
Atos 461

HY-SB-10561
HYUNDAI
Accent I (-> 01/2000) [X-3] 453

HY-SB-10562
HYUNDAI
Accent III (11/2005 ->) [MC] 457
KIA
Rio II 551

HY-SB-10725
HYUNDAI
Tucson (08/2004 ->) [JM] 507
KIA
Sportage II (09/2004 ->) [JE_, KM] 565

HY-SB-10752
HYUNDAI
Accent II (01/2000 ->) [LC] 455

HY-SB-10831
HYUNDAI
i20 (08/2008 ->) [PB_] 481

HY-SB-10832
HYUNDAI
i20 (08/2008 ->) [PB_] 481

HY-SB-10931
HYUNDAI
Santa Fé I 493

...HY-SB-10931
Santa Fé II 495

HY-SB-10968
HYUNDAI
Accent III (11/2005 ->) [MC] 457
KIA
Rio II 551

HY-SB-12668
HYUNDAI
Accent II (01/2000 ->) [LC] 455

HY-SB-12670
HYUNDAI
Matrix 491

HY-SB-12671
HYUNDAI
Matrix 491

HY-SB-12672
HYUNDAI
i20 (08/2008 ->) [PB_] 481

HY-SB-12674
HYUNDAI
Santa Fé I 493
Santa Fé II 495

HY-SB-13299
HYUNDAI
ix35 [LM, EL] 487
KIA
Sportage III (07/2010 ->) [SL] 567

HY-SB-13300
HYUNDAI
ix35 [LM, EL] 487
KIA
Sportage III (07/2010 ->) [SL] 567

HY-SB-13367
HYUNDAI
Accent IV (02/2010 ->) [RB] 459

HY-SB-13703
HYUNDAI
Accent IV (02/2010 ->) [RB] 459

HY-SB-13704
HYUNDAI
Accent IV (02/2010 ->) [RB] 459

HY-SB-13705
HYUNDAI
Accent IV (02/2010 ->) [RB] 459

HY-SB-13759
HYUNDAI
ix35 [LM, EL] 487
KIA
Cee'd (12/2006 ->) [ED] 535
Sportage III (07/2010 ->) [SL] 567

HY-SB-13760
HYUNDAI
ix35 [LM, EL] 487
KIA
Cee'd (12/2006 ->) [ED] 535
Sportage III (07/2010 ->) [SL] 567

HY-SB-13785
HYUNDAI
H-1 [TQ] 475

HY-SB-13786
HYUNDAI
H-1 [TQ] 475

HY-SB-14667
HYUNDAI
Coupé (2002 ->) 465

HY-SB-14669
HYUNDAI
Coupé (2002 ->) 465
Elantra 467

HY-SB-14670
HYUNDAI
Coupé (2002 ->) 465

HY-SB-14672
HYUNDAI
Getz 471

HY-SB-14674
HYUNDAI
H-1 / Starex 473

HY-SB-14721
HYUNDAI
ix35 [LM, EL] 487
KIA
Sportage III (07/2010 ->) [SL] 567

HY-SB-14732
HYUNDAI
ix35 [LM, EL] 487
KIA
Sportage III (07/2010 ->) [SL] 567

HY-SB-14744
HYUNDAI
ix35 [LM, EL] 487
KIA
Sportage III (07/2010 ->) [SL] 567

HY-SB-14837
HYUNDAI
i30 (10/2007 ->) [FD] 485
KIA
Cee'd (12/2006 ->) [ED] 535

HY-SB-15267
HYUNDAI
ix35 [LM, EL] 487

...HY-SB-15267
KIA
Sportage III (07/2010 ->) [SL] 567

HY-SB-15293
HYUNDAI
ix35 [LM, EL] 487

HY-SB-15325
HYUNDAI
Santa Fé I 493
Santa Fé II 495

HY-SB-2635
HYUNDAI
Accent II (01/2000 ->) [LC] 455
Matrix 491

HY-SB-2636
HYUNDAI
Matrix 491

HY-SB-2643
HYUNDAI
Santa Fé I 493
Santa Fé II 495
Trajet - Highway Van 505

HY-SB-2644
HYUNDAI
Santa Fé I 493
Santa Fé II 495
Trajet - Highway Van 505

HY-SB-5646
HYUNDAI
Getz 471

HY-SB-5647
HYUNDAI
Getz 471

HY-SB-7087
HYUNDAI
Accent III (11/2005 ->) [MC] 457
KIA
Rio II 551

HY-SB-7088
HYUNDAI
Accent III (11/2005 ->) [MC] 457
KIA
Rio II 551

HY-SB-7323
HYUNDAI
Accent II (01/2000 ->) [LC] 455

HY-SB-8067
HYUNDAI
Santa Fé II 495

HY-SB-8070
HYUNDAI
Santa Fé II 495

HY-SB-8895

HYUNDAI

i30 (10/2007 ->) [FD] 485

KIA

Cee'd (12/2006 ->) [ED] 535

HY-SB-8957

HYUNDAI

Sonata IV 499

HY-SB-9770

HYUNDAI

Accent I (-> 01/2000) [X-3] 453

Accent II (01/2000 ->) [LC] 455

HY-SB-9772

HYUNDAI

Coupé (-> 2002) 463

Elantra 467

Lantra II (11/1995 ->) 489

KIA

Cerato [LD] 537

HY-SB-9774

HYUNDAI

Coupé (-> 2002) 463

Coupé (2002 ->) 465

Elantra 467

Lantra II (11/1995 ->) 489

Tucson (08/2004 ->) [JM] 507

KIA

Sportage II (09/2004 ->) [JE_, KM] 565

HY-SB-9776

HYUNDAI

Coupé (-> 2002) 463

Coupé (2002 ->) 465

Elantra 467

Lantra II (11/1995 ->) 489

Tucson (08/2004 ->) [JM] 507

KIA

Sportage II (09/2004 ->) [JE_, KM] 565

HY-SB-9778

HYUNDAI

Sonata IV 499

HY-SB-9780

HYUNDAI

Accent II (01/2000 ->) [LC] 455

Getz 471

HY-SB-9782

HYUNDAI

Sonata III 497

Trajet - Highway Van 505

HY-SB-9786

HYUNDAI

Accent I (-> 01/2000) [X-3] 453

HY-SB-9788

HYUNDAI

Santa Fé I 493

...HY-SB-9788

Santa Fé II 495

Tucson (08/2004 ->) [JM] 507

KIA

Sportage II (09/2004 ->) [JE_, KM] 565

HY-SB-9790

HYUNDAI

Santa Fé I 493

Santa Fé II 495

HY-SB-9816

HYUNDAI

Santa Fé II 495

KIA

Carnival I - II [UP, GQ] 531

Carnival III , Sedona [VQ] 533

HY-TC-13323

HYUNDAI

Matrix 491

HY-TC-13324

HYUNDAI

Matrix 491

HY-TC-14695

HYUNDAI

Santa Fé II 495

HY-TC-14696

HYUNDAI

Santa Fé II 495

HY-TC-8891

HYUNDAI

H-1 / Starex 473

HY-TC-8892

HYUNDAI

H-1 / Starex 473

HY-WP-10433

HYUNDAI

i20 (08/2008 ->) [PB_] 481

HY-WP-10434

HYUNDAI

i20 (08/2008 ->) [PB_] 481

HY-WP-10567

HYUNDAI

i10 (10/2007 ->) 479

HY-WP-10568

HYUNDAI

i10 (10/2007 ->) 479

HY-WP-10589

HYUNDAI

Sonata V 501

HY-WP-10590

HYUNDAI

Sonata V 501

HY-WP-10593

HYUNDAI

Sonata V 501

HY-WP-10594

HYUNDAI

Sonata V 501

HY-WP-13263

HYUNDAI

Accent IV (02/2010 ->) [RB] 459

HY-WP-13264

HYUNDAI

Accent IV (02/2010 ->) [RB] 459

HY-WP-13301

HYUNDAI

ix35 [LM, EL] 487

KIA

Sportage III (07/2010 ->) [SL] 567

HY-WP-13302

HYUNDAI

ix35 [LM, EL] 487

KIA

Sportage III (07/2010 ->) [SL] 567

HY-WP-2612

HYUNDAI

Santa Fé I 493

Santa Fé II 495

HY-WP-2614

HYUNDAI

Santa Fé I 493

Santa Fé II 495

HY-WP-2621

HYUNDAI

Coupé (-> 2002) 463

Lantra II (11/1995 ->) 489

HY-WP-2622

HYUNDAI

Coupé (-> 2002) 463

Lantra II (11/1995 ->) 489

HY-WP-2623

HYUNDAI

Atos 461

HY-WP-2624

HYUNDAI

Atos 461

HY-WP-2630

HYUNDAI

Accent II (01/2000 ->) [LC] 455

HY-WP-2631

HYUNDAI

Accent II (01/2000 ->) [LC] 455

HY-WP-2633

HYUNDAI

Matrix 491

HY-WP-2634

HYUNDAI

Matrix 491

HY-WP-2647

HYUNDAI

Getz 471

HY-WP-2648

HYUNDAI

Getz 471

HY-WP-2650

HYUNDAI

Elantra 467

HY-WP-2651

HYUNDAI

Elantra 467

HY-WP-2665

HYUNDAI

Sonata IV 499

HY-WP-2666

HYUNDAI

Sonata IV 499

HY-WP-3148

HYUNDAI

Accent I (-> 01/2000) [X-3] 453

HY-WP-3149

HYUNDAI

Accent I (-> 01/2000) [X-3] 453

HY-WP-4940

HYUNDAI

Santa Fé II 495

HY-WP-4941

HYUNDAI

Santa Fé II 495

HY-WP-7083

HYUNDAI

Accent III (11/2005 ->) [MC] 457

KIA

Rio II 551

HY-WP-7084

HYUNDAI

Accent III (11/2005 ->) [MC] 457

KIA

Rio II 551

HY-WP-7085

HYUNDAI

Accent III (11/2005 ->) [MC] 457

KIA

Rio II 551

HY-WP-7086

HYUNDAI

Accent III (11/2005 ->) [MC] 457

KIA

Rio II 551

MOOG

HY-WP-7329
HYUNDAI
H100 477

HY-WP-7330
HYUNDAI
H100 477

HY-WP-7360
HYUNDAI
Sonata IV 499

HY-WP-7361
HYUNDAI
Sonata IV 499

HY-WP-7362
HYUNDAI
Sonata IV 499

HY-WP-7363
HYUNDAI
Sonata IV 499

JA-AX-10755
JAGUAR
XJ - XJS (-> 1997) 513

JA-AX-4433
JAGUAR
X-Type 515

JA-BJ-0561
JAGUAR
XJ - XJS (-> 1997) 513

JA-ES-0585
JAGUAR
XJ - XJS (-> 1997) 513

JA-LS-4044
JAGUAR
X-Type 515

JA-SB-13289
JAGUAR
X-Type 515

JA-SB-13290
JAGUAR
X-Type 515

JA-SB-8110
JAGUAR
XJ - XJS (-> 1997) 513

JA-TC-10682
JAGUAR
X-Type 515

K150001
FIAT
Fiorino (1988 ->) 313

K150005
CITROËN
ZX 241
PEUGEOT
205 925

K150006
HYUNDAI
Accent I (-> 01/2000) [X-3] 453
Coupé (-> 2002) 463

K150008
RENAULT
19 991
Clio II - Thalia 997
Express - Rapid 1009
Twingo I 1047

K150009
PEUGEOT
205 925
306 935
Partner I - Ranch 979

K150010
PEUGEOT
406 945

K150012
VOLVO
940 I & II (-> 10/1998) - 960 I (-> 07/1994) 1357
960 II (07/1994 ->) - S90 - V90 1359

K150013
SUZUKI
Baleno [EG] 1195

K150014
OPEL
Agila I 859
Combo I (-> 10/2001) 877
Corsa B 881
Tigra (-> 2000) 905
SUBARU
Justy III 1183
VAUXHALL
Agila I 859
Combo Mk I (-> 09/2001) 1311
Corsa Mk I 1315
Tigra Mk I 1339

K150015
FORD
Escort V, VI, VII - Express (1990 ->) 363

K150017
DACIA
1300, 1310 243

K150021
AUDI
A6 (1994 -> 1997) [4A, C4] 51
A8 (-> 09/2002) [4D2, 4D8] 63

K150023
SAAB
900 II (1993 ->) 1079

K150024
SEAT
Cordoba (-> 09/2002) - Cordoba Vario (08/1996 ->) [6K_] 1091

...K150024
Ibiza II (1993 ->08/1999) [6K1] 1101
Ibiza III (08/1999 ->02/2002) 1105
Inca 1111
VW
Golf III 1413

K150028
MERCEDES-BENZ
A-Class [168] 667

K150029
CHRYSLER
Voyager III [GS] 173
SEAT
Cordoba (-> 09/2002) - Cordoba Vario (08/1996 ->) [6K_] 1091
Ibiza II (1993 ->08/1999) [6K1] 1101

K150030
RENAULT
19 991
Clio I 995
Clio II - Thalia 997
Express - Rapid 1009

K150031
LANCIA
Dedra 581

K150033
ROVER
200 (10/1989 ->) - Coupé - Cabriolet [XW - RF] 1065
400 (-> 04/1995) - 400 Tourer 1067
400 (05/1995 ->) 1069

K150036
ROVER
200 (10/1989 ->) - Coupé - Cabriolet [XW - RF] 1065

K150039
NISSAN
Primera [P11] (06/1996 -> 2002) - Estate [WP11] (04/1998 -> 2002) 839

K150040
OPEL
Astra F 867
VAUXHALL
Astra Mk III 1301

K150042
LADA
110 - 111 - 112 571
Priora 579

K150043
CITROËN
Xantia 233
XM 235

...K150043
PEUGEOT
405 943

K150044
PEUGEOT
405 943

K150045
CITROËN
Berlingo I (07/1996 ->) 177
ZX 241

K150046
FIAT
Seicento 345

K150049
CITROËN
Xantia 233

K150050
DAIHATSU
Cuore (1985 -> 1996) 283

K150052
CHEVROLET
Matiz 157
DAEWOO
Matiz 157
MAZDA
323 V [BA] 643

K150053
MITSUBISHI
Colt V (09/1995 ->) 769

K150055
MITSUBISHI
Colt V (09/1995 ->) 769
Galant V & VI (1992 ->) 773
Space Star 801

K150056
MAZDA
Xedos 9 665

K150057
DAEWOO
Lanos - Nexia - Espero 267
SAAB
9-3 I [YS3D] 1073

K150059
CITROËN
Saxo 229
PEUGEOT
106 921

K150061
SKODA
Felicia - Pickup 1141

K150063
SUBARU
Justy I & II 1181

...K150063

SUZUKI

Alto I, II & III (-> 06/2002) 1189
Alto IV [FF] 1191
Ignis I 1203
Wagon R+ 1219

K150064

DAEWOO

Lanos - Nexia - Espero 267

K150067

FIAT

Barchetta 295
Brava - Bravo I 297
Coupé 301
Marea 321
Palio - Siena 325
Punto I (-> 09/1999) 331
Punto II (09/1999 ->) 333

LANCIA

Delta II (1993 ->) 583
Y 595

K150068

KIA

Pride [DA] 547

SUBARU

Legacy I, II & III - Outback I 1185

K150070

FORD

Cougar 359
Mondeo I 391
Mondeo II 393

K150072

OPEL

Astra F 867

VAUXHALL

Astra Mk III 1301

K150074

MAZDA

Xedos 9 665

K150077

LANCIA

Kappa 587

K150079

OPEL

Astra F 867

VAUXHALL

Astra Mk III 1301

K150080

FORD

Mondeo I 391

K150081

SEAT

Arosa 1089
Ibiza III (08/1999 ->02/2002) [6K1] 1105

...K150081

VW

Lupo 1437
Polo (1994 -> 1999) [6N1 - 6NF] 1455
Polo (1999 -> 2001) [6N2] 1457
Polo Classic - Variant (1995 -> 2001) [6KV] 1463

K150082

AUDI

A4 (-> 11/2004) [8D, 8E, 8H, B5, B6] 35

VW

Passat (1996 -> 2000) [3B2 - 3B5] 1443

K150083

AUDI

A2 [8Z0] 23

SEAT

Arosa 1089

SKODA

Felicia - Pickup 1141

VW

Lupo 1437
Polo (1994 -> 1999) [6N1 - 6NF] 1455
Polo (1999 -> 2001) [6N2] 1457
Polo Classic - Variant (1995 -> 2001) [6KV] 1463

K150084

FORD

Galaxy I 377

SEAT

Alhambra 1081

VW

Sharan I 1467

K150085

FORD

Escort V, VI, VII - Express (1990 ->) 363
Fiesta IV (1995 -> 2001) - Fiesta Van / Courier (1996 ->) 365
Ka I 381

MAZDA

121 III (03/1996 ->) 641

K150086

HYUNDAI

Sonata IV 499

OPEL

Vectra B (1995 -> 2002) 909

VAUXHALL

Vectra Mk I 1343

K150087

CITROËN

Evasion / Synergie 217
Jumpy I / Dispatch I (06/1994 ->) 223

FIAT

Scudo I 339

...K150087

Ulysse I (-> 08/2002) 351

LANCIA

Zeta 599

PEUGEOT

806 953
Expert I 975

K150088

FORD

Transit IV 417
Transit V 419

K150089

OPEL

Combo I (-> 10/2001) 877
Corsa B 881
Tigra (-> 2000) 905

VAUXHALL

Combo Mk I (-> 09/2001) 1311
Corsa Mk I 1315
Tigra Mk I 1339

K150091

BMW

5 [E39] (not 535i, 540i & M5) 111

K150092

BMW

3 [E36] - Z3 93
3 [E46] - Z4 97

K150094

SEAT

Cordoba (-> 09/2002) - Cordoba Vario (08/1996 ->) [6K_] 1091
Ibiza II (1993 ->08/1999) [6K1] 1101
Ibiza III (08/1999 ->02/2002) [6K1] 1105
Inca 1111

VW

Caddy II (11/1995 -> 01/2004) [9K_ - 9U_] 1401
Golf III 1413
Polo (1994 -> 1999) [6N1 - 6NF] 1455
Polo (1999 -> 2001) [6N2] 1457
Polo Classic - Variant (1995 -> 2001) [6KV] 1463
Sharan I 1467

K150098

NISSAN

Almera I (-> 2000) 805

K150100

ALFA ROMEO

Alfa 145 - 146 (->12/1996) 1

K150103

HONDA

Accord V (1993 -> 1998) 421
Civic V (1991 -> 1996) - CRX III (1992 -> 1998) 429

...K150103

Civic VI (1994 -> 2001) 431

K150104

NISSAN

Maxima QX (10/1994 -> 08/2000) 817
Vanette [C23] (1995 ->) 851

K150106

ROVER

600 1071

K150109

FORD

Transit III (Rack / Pinion) 415

K150110

RENAULT

Megane I - Scenic I 1033

K150111

RENAULT

Megane I - Scenic I 1033

K150114

RENAULT

Clio I 995
Twingo I 1047

K150115

RENAULT

Laguna I 1021

K150118

FIAT

Ducato II (03/1994 ->) 309

PEUGEOT

Boxer I 971

K150119

CITROËN

Jumper I / Relay I (02/1994 ->) [230, 244] 219

FIAT

Ducato II (03/1994 ->) 309

PEUGEOT

Boxer I 971

K150120

FIAT

Ducato II (03/1994 ->) 309

TOYOTA

Celica (11/1993 -> 11/1999) [T20] 1239

K150121

RENAULT

Twingo I 1047

K150122

CITROËN

Xantia 233
XM 235

PEUGEOT

406 945

MOOG

K150123
CITROËN
Saxo 229

K150124
CITROËN
Berlingo I (07/1996 ->) 177
PEUGEOT
306 935
Partner I - Ranch 979

K150125
CITROËN
Xsara 237

K150126
CITROËN
Berlingo I (07/1996 ->) 177
Xsara 237
Xsara Picasso 239
PEUGEOT
306 935
Partner I - Ranch 979

K150127
MERCEDES-BENZ
Sprinter I [901, 902, 903, 904, 905] 739
PEUGEOT
206 927
VW
LT II 28-46 1435

K150128
PEUGEOT
206 927
307 937

K150129
CITROËN
Saxo 229

K150130
PEUGEOT
406 945

K150132
PEUGEOT
106 921

K150133
NISSAN
Interstar 811
OPEL
Movano A 897
RENAULT
Espace III - Avantime 1005
Master II 1029
VAUXHALL
Movano Mk I 1331

K150134
NISSAN
Kubistar 815
RENAULT
Clio II - Thalia 997

...K150134
Kangoo I 1015
Megane I - Scenic I 1033

K150137
ALFA ROMEO
Alfa 145 - 146 (12/1996 ->) 3

K150138
NISSAN
Kubistar 815
RENAULT
Clio II - Thalia 997
Kangoo I 1015

K150139
AUDI
A4 (-> 11/2004) [8D, 8E, 8H, B5, B6] 35
A6 (1994 -> 1997) [4A, C4] 51
A6 (1997 -> 2004) [4B, C5] 53
A8 (-> 09/2002) [4D2, 4D8] 63
Allroad (05/2000 -> 08/2005) [4BH, C5] 69

K150140
AUDI
A4 (-> 11/2004) [8D, 8E, 8H, B5, B6] 35
A6 (1997 -> 2004) [4B, C5] 53

K150141
SKODA
Superb I [3U4] 1157
VW
Passat (1996 -> 2000) [3B2 - 3B5] 1443
Passat (2000 -> 2005) [3B3 - 3B6] 1445

K150142
AUDI
A4 (-> 11/2004) [8D, 8E, 8H, B5, B6] 35

K150143
RENAULT
Safrane 1043

K150144
FORD
Fiesta IV (1995 -> 2001) - Fiesta Van / Courier (1996 ->) 365
Ka I 381
Puma 401
MAZDA
121 III (03/1996 ->) 641

K150145
HYUNDAI
Atos 461
TOYOTA
Paseo 1263

K150146
VW
Golf III 1413

...K150146
Golf IV 1415

K150148
MERCEDES-BENZ
V-Class / Vito I [638] 745

K150149
MERCEDES-BENZ
A-Class [168] 667

K150150
CITROËN
Saxo 229
PEUGEOT
106 921

K150151
CITROËN
Saxo 229

K150152
CITROËN
Saxo 229

K150153
MITSUBISHI
Carisma 767
VOLVO
S40 I (-> 12/2003) - V40 1365

K150154
HONDA
Accord VI (1998 ->2003) 423

K150155
HONDA
CRV I (10/1995 ->) 439

K150156
MITSUBISHI
Pajero II (1991 -> 2000) - Sport / Challenger / Classic 793
Pajero III (2000 ->) 795

K150157
RENAULT
Clio II - Thalia 997

K150158
BMW
3 [E36] - Z3 93
3 [E46] - Z4 97

K150160
MITSUBISHI
Carisma 767
Space Star 801
SUBARU
Forester (-> 2008) 1175
Forester (01/2008 ->) [SH] 1177
Impreza (-> 2007) 1179
Legacy I, II & III - Outback I 1185

K150162
BMW
3 [E46] - Z4 97

K150163
BMW
3 [E46] - Z4 97

K150164
MAZDA
Demio 655

K150165
FIAT
Tempra - Tipo 349

K150166
FIAT
Brava - Bravo I 297
Tempra - Tipo 349
LANCIA
Dedra 581
Delta II (1993 ->) 583

K150167
ALFA ROMEO
Alfa 145 - 146 (12/1996 ->) 3
GTV - Spider (09/1994 ->) 17

K150171
CHEVROLET
Lacetti 155
Nubira 159
DAEWOO
Lacetti 155
Leganza 269
Nubira I 273
Nubira III (2003->) 275
OPEL
Vectra B (1995 -> 2002) 909
TOYOTA
Avensis I (-> 2003) [T22] 1223
Picnic 1265
VAUXHALL
Vectra Mk I 1343

K150172
FORD
Scorpio II 405

K150173
FIAT
Multipla 323
LANCIA
Lybra 589

K150174
FORD
Transit IV 417
Transit V 419

K150175
FORD
Transit IV 417
HYUNDAI
Accent II (01/2000 ->) [LC] 455
Lantra II (11/1995 ->) 489

K150177
TOYOTA
Corolla (07/1992 -> 01/2002) [E10, E11] 1243

...K150177

RAV 4 I (-> 06/2000) 1275
RAV 4 II (06/2000 ->) [_A2_] 1277

K150178

MAZDA
323 V [BA] 643
323 VI [BJ] 645
MX-5 II (05/1998 ->) 661

K150179

SAAB
9-5 1077

K150180

VOLVO
960 II (07/1994 ->) - S90 - V90 1359
S60 I (384) 1369
S70 - C70 - V70 I (-> 2000) 1373
S80 I 1375
XC70 I 1387

K150181

ALFA ROMEO
Alfa 147 - GT 5
Alfa 156 7
Alfa 166 11

K150182

AUDI
A3 (-> 05/2003) [8L1] 25
TT (-> 08/2006) [8N3, 8N9] 77
SEAT
Leon I (-> 2005) [1M1] 1113
Toledo II (04/1999 -> 09/2004) [1M2] 1125
SKODA
Octavia I (-> 2004) [1U_] 1143
VW
Bora 1397
Golf IV 1415
New beetle 1439

K150183

HONDA
Accord V (1993 -> 1998) 421
Accord VI (1998 ->2003) 423

K150185

HONDA
HR-V 447

K150186

HYUNDAI
H-1 / Starex 473
H100 477

K150187

AUDI
A2 [8Z0] 23
SEAT
Cordoba (09/2002 ->) [6L2] 1095
Ibiza IV (02/2002 ->) [6L1] 1107

...K150187

SKODA
Fabia I [6Y_] 1135
VW
Lupo 1437
Polo (2001 -> 2009) [9N] 1459

K150188

TOYOTA
Land Cruiser 100 [_J1_] 1259
Land Cruiser 90 [_J9_] 1257

K150189

HYUNDAI
Coupé (2002 ->) 465
OPEL
Frontera B - Monterey B (1998 ->) 887
TOYOTA
Land Cruiser 300 [_J12_] 1255
VAUXHALL
Frontera Mk II - Monterey Mk II 1321

K150191

OPEL
Astra G 869
Zafira A (-> 2005) 915
VAUXHALL
Astra Mk IV 1303
Zafira Mk I 1349

K150193

FORD
Focus I (-> 11/2004) 371
Focus II (11/2004 ->) / Focus C-Max 373
ROVER
75 1061

K150194

MAZDA
323 V [BA] 643
323 VI [BJ] 645
Premacy 663

K150196

MAZDA
MPV I (-> 09/1999) 657
MPV II (09/1999 ->) 659

K150197

MAZDA
6 (08/2002 ->) [GG, GY] 637

K150199

DAIHATSU
Charade (1987 ->)[G100-200] 281

K150201

DAIHATSU
Terios I (-> 10/2005) [J1] 285

K150204

KIA
Carnival I - II [UP, GQ] 531

K150205

SUZUKI
Carry (03/1999 ->) 1197

K150208

SUZUKI
Grand Vitara I 1199

K150209

LAND ROVER
Freelander I 611

K150210

KIA
Clarus 539
Shuma I 555

K150211

VOLVO
960 II (07/1994 ->) - S90 - V90 1359
S60 I (384) 1369
S70 - C70 - V70 I (-> 2000) 1373
S80 I 1375
XC70 I 1387

K150212

VOLVO
S60 I (384) 1369
S80 I 1375
V70 II (2000 ->) 1383
XC70 I 1387

K150213

MAZDA
Demio 655

K150214

SMART
City Coupé - Cabrio - Fortwo I [450] 1167

K150215

TOYOTA
MR 2 (2000->) 1261
Yaris I 1285

K150216

FIAT
Doblo I 305
SAAB
9-3 II [YS3F] 1075

K150217

FIAT
Stilo 347

K150218

FORD
Mondeo III 395

K150219

FORD
Fiesta V (2002 -> 2008) - Fusion 367
MAZDA
2 (-> 2007) [DY] 625

K150220

OPEL
Combo II (10/2001 ->) 879
Corsa C 883
VAUXHALL
Combo Mk II (09/2001 ->) 1313
Corsa Mk II 1317

K150221

MERCEDES-BENZ
S-Class [220] 729
SL [230] 733

K150222

VOLVO
XC90 I (275) 1391

K150223

BMW
X5 (I) [E53] 139

K150224

MINI
Mini (I) [R50, R52, R53] 757

K150225

CITROËN
C5 199
PEUGEOT
607 951

K150226

CITROËN
C2 - C3 183

K150227

CITROËN
C8 205
FIAT
Ulysse II (08/2002 ->) 353
LANCIA
Phedra 593
PEUGEOT
807 955

K150228

OPEL
Vivaro (08/2001 ->) 913
VAUXHALL
Vivaro Mk I 1347

K150229

HONDA
Civic VII (2001 ->) 433

K150231

SEAT
Leon I (-> 2005) [1M1] 1113
Toledo II (04/1999 -> 09/2004) [1M2] 1125
SKODA
Octavia I (-> 2004) [1U_] 1143
VW
Bora 1397
Golf IV 1415

...K150231
New beetle 1439

K150232
AUDI
A6 (1997 -> 2004) [4B, C5] 53
Allroad (05/2000 -> 08/2005) [4BH, C5] 69
SKODA
Superb I [3U4] 1157
VW
Passat (2000 -> 2005) [3B3 - 3B6] 1445

K150233
AUDI
A8 (10/2002 -> 07/2010) [4E_] 65
VW
Phaeton [3D_] 1453

K150234
SEAT
Cordoba (09/2002 ->) [6L2] 1095
Ibiza IV (02/2002 ->) [6L1] 1107
VW
Polo (2001 -> 2009) [9N] 1459

K150235
AUDI
A2 [8Z0] 23
SEAT
Cordoba (09/2002 ->) [6L2] 1095
Ibiza IV (02/2002 ->) [6L1] 1107
SKODA
Fabia I [6Y_] 1135
VW
Polo (2001 -> 2009) [9N] 1459

K150236
OPEL
Meriva A 891
VAUXHALL
Meriva Mk I 1325

K150237
BMW
5 [E60, E61] 115
PORSCHE
Cayenne I 987
VW
Touareg I 1473

K150239
TOYOTA
Avensis II (2003 ->) [T25] 1225

K150240
TOYOTA
Yaris I 1285

K150241
VW
Transporter V - Multivan V 1483

K150242
AUDI
A4 (-> 11/2004) [8D, 8E, 8H, B5, B6] 35

K150243
NISSAN
Almera II (2000 ->) 807
Primera [P12] - Estate [WP12] (2002 ->) 841

K150244
NISSAN
Almera Tino 809

K150245
NISSAN
Micra [K12] (2003 ->) 819

K150246
RENAULT
Laguna II 1023

K150247
SUBARU
Impreza (-> 2007) 1179

K150248
NISSAN
X-Trail I 853

K150249
HONDA
CRV II (09/2001 ->) 441

K150250
HONDA
Accord VII (2003 ->2008) 425

K150251
HONDA
Accord VII (2003 ->2008) 425

K150252
BMW
5 [E60, E61] 115
7 [E65, E66, E67] 129

K150253
RENAULT
Espace IV 1007
Vel Satis 1051

K150254
RENAULT
Megane II - Scenic II 1037

K150255
MITSUBISHI
Space Wagon - Space Runner (1999 ->) 803

K150256
MERCEDES-BENZ
Vaneo [414] 743

K150260
FORD
Focus I (-> 11/2004) 371

K150262
HYUNDAI
Getz 471
Matrix 491

K150264
FORD
Transit Connect - Tourneo Connect 409

K150265
MERCEDES-BENZ
CLC-Class [203] 685

K150266
CITROËN
Xsara Picasso 239

K150269
MAZDA
MPV II (09/1999 ->) 659

KI-AX-10103
KIA
Carens III [UN] 529
Magentis II 543

KI-AX-10602
KIA
Carnival I - II [UP, GQ] 531

KI-AX-10612
KIA
Carens I - II [FC, FJ] 527

KI-AX-10615
KIA
Soul I 561
Venga [YN] 569

KI-AX-13248
KIA
Picanto [BA] 545

KI-AX-2330
KIA
Rio I 549

KI-AX-2331
KIA
Rio I 549

KI-AX-2669
KIA
Carnival I - II [UP, GQ] 531

KI-AX-2671
KIA
Carnival I - II [UP, GQ] 531

KI-AX-4199
KIA
Picanto [BA] 545

KI-AX-4407
KIA
K2500 - K2700 541

KI-AX-4409
KIA
Sorento I 559

KI-AX-4424
KIA
K2500 - K2700 541

KI-AX-4432
KIA
Sorento I 559

KI-AX-5145
KIA
Picanto [BA] 545

KI-AX-7089
HYUNDAI
i30 (10/2007 ->) [FD] 485
KIA
Cee'd (12/2006 ->) [ED] 535

KI-AX-8937
KIA
Carnival III , Sedona [VQ] 533

KI-BJ-12659
KIA
Soul I 561

KI-BJ-13409
HYUNDAI
i30 (10/2007 ->) [FD] 485
KIA
Cee'd (12/2006 ->) [ED] 535

KI-BJ-4721
KIA
K2500 - K2700 541

KI-BJ-4757
HYUNDAI
i10 (10/2007 ->) 479
KIA
Picanto [BA] 545

KI-BJ-7094
HYUNDAI
i30 (10/2007 ->) [FD] 485
KIA
Carens III [UN] 529
Cee'd (12/2006 ->) [ED] 535
Magentis II 543

KI-BJ-8938
HYUNDAI
H-1 [TQ] 475
KIA
Carnival III , Sedona [VQ] 533

KI-BJ-8941
HYUNDAI
i30 (10/2007 ->) [FD] 485
KIA
Carnival III , Sedona [VQ] 533
Cee'd (12/2006 ->) [ED] 535

KI-ES-4200
KIA
Picanto [BA] 545

...KI-ES-4200
Rio I 549
KI-ES-4411
KIA
K2500 - K2700 541
KI-ES-8766
HYUNDAI
i20 (08/2008 ->) [PB_] 481
KIA
Soul I 561
Venga [YN] 569
KI-ES-8767
HYUNDAI
i20 (08/2008 ->) [PB_] 481
KIA
Soul I 561
Venga [YN] 569
KI-ES-8925
KIA
Carens III [UN] 529
Magentis II 543
KI-ES-8926
KIA
Carens III [UN] 529
Magentis II 543
KI-ES-8935
KIA
Carnival III , Sedona [VQ] 533
KI-ES-8936
KIA
Carnival III , Sedona [VQ] 533
KI-LS-10111
KIA
Sorento I 559
KI-LS-10112
KIA
Sorento I 559
KI-LS-10613
KIA
Soul I 561
KI-LS-10614
KIA
Soul I 561
KI-LS-13255
KIA
Sorento I 559
KI-LS-13256
KIA
Sorento I 559
KI-LS-13943
KIA
K2500 - K2700 541
KI-LS-2384
KIA
Shuma I 555
KI-LS-2670
KIA
Carens I - II [FC, FJ] 527
Shuma I 555
Shuma II 557
KI-LS-2673
KIA
Clarus 539
KI-LS-2674
KIA
Clarus 539
MAZDA
CX-7 [ER] 653
KI-LS-2676
KIA
Clarus 539
MAZDA
CX-7 [ER] 653
KI-LS-3899
KIA
Carnival I - II [UP, GQ] 531
KI-LS-4422
KIA
Rio I 549
KI-LS-4423
KIA
Rio I 549
KI-LS-4694
KIA
Rio I 549
KI-LS-4695
KIA
Rio I 549
KI-LS-4883
KIA
Picanto [BA] 545
KI-LS-4884
KIA
Picanto [BA] 545
KI-LS-7090
HYUNDAI
i30 (10/2007 ->) [FD] 485
KIA
Cee'd (12/2006 ->) [ED] 535
KI-LS-7099
HYUNDAI
i30 (10/2007 ->) [FD] 485
KIA
Cee'd (12/2006 ->) [ED] 535
KI-LS-7129
KIA
Cerato [LD] 537
KI-LS-7130
KIA
Cerato [LD] 537
KI-LS-7131
HYUNDAI
Matrix 491
KIA
Cerato [LD] 537
KI-LS-8342
KIA
Carens I - II [FC, FJ] 527
Shuma II 557
KI-LS-8343
KIA
Carens I - II [FC, FJ] 527
Shuma II 557
KI-LS-8842
KIA
Carnival III , Sedona [VQ] 533
KI-LS-8917
KIA
Carens I - II [FC, FJ] 527
KI-LS-8918
KIA
Carens I - II [FC, FJ] 527
KI-LS-8923
KIA
Carens III [UN] 529
Magentis II 543
KI-LS-8932
KIA
Carens III [UN] 529
Magentis II 543
KI-LS-8933
KIA
Carnival III , Sedona [VQ] 533
KI-LS-8934
KIA
Carnival III , Sedona [VQ] 533
KI-SB-10150
KIA
Carens I - II [FC, FJ] 527
Shuma I 555
Shuma II 557
KI-SB-10522
KIA
Carnival III , Sedona [VQ] 533
KI-SB-10523
KIA
Carnival III , Sedona [VQ] 533
KI-SB-10584
HYUNDAI
Tucson (08/2004 ->) [JM] 507
KIA
Sportage II (09/2004 ->) [JE_, KM] 565
KI-SB-10603
KIA
Carnival III , Sedona [VQ] 533
KI-SB-10607
KIA
Picanto [BA] 545
KI-SB-10619
HYUNDAI
Tucson (08/2004 ->) [JM] 507
KIA
Sportage II (09/2004 ->) [JE_, KM] 565
KI-SB-13277
KIA
Rio I 549
KI-SB-13352
KIA
Carnival I - II [UP, GQ] 531
KI-SB-13355
KIA
Sportage II (09/2004 ->) [JE_, KM] 565
KI-SB-5148
KIA
Picanto [BA] 545
KI-SB-5149
KIA
Picanto [BA] 545
KI-SB-7097
HYUNDAI
i30 (10/2007 ->) [FD] 485
KIA
Cee'd (12/2006 ->) [ED] 535
KI-SB-7098
HYUNDAI
i30 (10/2007 ->) [FD] 485
KIA
Cee'd (12/2006 ->) [ED] 535
KI-SB-7447
KIA
Sorento I 559
KI-SB-7448
KIA
Sorento I 559
KI-SB-8914
KIA
Carens I - II [FC, FJ] 527
Shuma I 555
Shuma II 557
KI-SB-8921
KIA
Carens I - II [FC, FJ] 527
Shuma I 555
Shuma II 557
KI-SB-8922
KIA
Carens I - II [FC, FJ] 527

...KI-SB-8922
Shuma I 555
Shuma II 557
KI-SB-9792
KIA
Sportage I (04/1994 ->) [K00] 563
KI-SB-9794
KIA
Sephia 553
KI-SB-9801
KIA
Sorento I 559
KI-SB-9822
KIA
Shuma I 555
Shuma II 557
KI-SB-9824
KIA
Shuma I 555
Shuma II 557
KI-SB-9914
KIA
Carnival I - II [UP, GQ] 531
KI-TC-10617
KIA
Sportage I (04/1994 ->) [K00] 563
KI-TC-4417
KIA
Rio I 549
KI-TC-4418
KIA
Rio I 549
KI-TC-8084
KIA
Rio I 549
KI-TC-8085
KIA
Rio I 549
KI-TC-8807
KIA
Sorento I 559
KI-TC-8808
KIA
Sorento I 559
KI-WP-2672
KIA
Carnival I - II [UP, GQ] 531
KI-WP-2675
KIA
Carnival I - II [UP, GQ] 531
KI-WP-5146
KIA
Picanto [BA] 545
KI-WP-5147
KIA
Picanto [BA] 545
KI-WP-7095
HYUNDAI
i30 (10/2007 ->) [FD] 485
KIA
Cee'd (12/2006 ->) [ED] 535
KI-WP-7096
HYUNDAI
i30 (10/2007 ->) [FD] 485
KIA
Cee'd (12/2006 ->) [ED] 535
KI-WP-8423
HYUNDAI
Tucson (08/2004 ->) [JM] 507
KIA
Sportage II (09/2004 ->) [JE_, KM] 565
KI-WP-8424
HYUNDAI
Tucson (08/2004 ->) [JM] 507
KIA
Sportage II (09/2004 ->) [JE_, KM] 565
KI-WP-8927
KIA
Carens III [UN] 529
KI-WP-8928
KIA
Carens III [UN] 529
KI-WP-8943
KIA
Cerato [LD] 537
KI-WP-8944
KIA
Cerato [LD] 537
LA-AX-10773
LADA
Priora 579
LA-AX-10797
LADA
110 - 111 - 112 571
LA-AX-12622
LADA
110 - 111 - 112 571
LA-AX-13934
LADA
Granta 573
Kalina 575
LA-BJ-0063
LADA
110 - 111 - 112 571
Granta 573
...LA-BJ-0063
Kalina 575
Priora 579
LA-BJ-0392
LADA
Niva 577
LA-DS-0385
LADA
Niva 577
LA-ES-0060
LADA
Priora 579
LA-ES-0061
LADA
Priora 579
LA-ES-0062
LADA
Priora 579
LA-ES-0386
LADA
Niva 577
LA-ES-0649
LADA
110 - 111 - 112 571
LA-ES-0650
LADA
110 - 111 - 112 571
LA-ES-8804
LADA
Granta 573
Kalina 575
LA-ES-8805
LADA
Granta 573
Kalina 575
LA-LS-10573
LADA
Kalina 575
Priora 579
LN-AX-2677
LANCIA
Lybra 589
LN-AX-3904
LANCIA
Kappa 587
LN-AX-4421
LANCIA
Kappa 587
LN-AX-4758
LANCIA
Ypsilon 597
LN-BJ-0220
LANCIA
Kappa 587
LN-ES-1770
LANCIA
Kappa 587
LN-ES-4771
LANCIA
Ypsilon 597
LN-LS-13578
LANCIA
Lybra 589
LN-LS-2678
LANCIA
Kappa 587
LN-SB-4840
FIAT
Idea 317
Panda II [169_] 327
LANCIA
Musa 591
Ypsilon 597
LN-SB-4864
FIAT
Idea 317
LANCIA
Musa 591
Ypsilon 597
LN-SB-6691
LANCIA
Lybra 589
LN-TC-4800
FIAT
Idea 317
LANCIA
Musa 591
Ypsilon 597
LN-TC-4835
FIAT
Idea 317
LANCIA
Musa 591
Ypsilon 597
LN-WP-4405
LANCIA
Kappa 587
LN-WP-4406
LANCIA
Kappa 587
LR-AX-13410
LAND ROVER
Evoque 609
LR-AX-13965
LAND ROVER
Range Rover IV (08/2012 ->) 619
Range Rover Sport (04/2013) 623

LR-AX-3661
LAND ROVER
Range Rover Sport (02/2005 -> 03/2013) 621

LR-AX-4212
LAND ROVER
Range Rover III (03/2002 -> 08/2012) 617

LR-AX-5020
LAND ROVER
Discovery III 605

LR-AX-5021
LAND ROVER
Discovery III 605

LR-BJ-1928
LAND ROVER
Freelander I 611

LR-BJ-4057
LAND ROVER
Range Rover III (03/2002 -> 08/2012) 617

LR-BJ-4838
LAND ROVER
Discovery III 605

LR-BJ-4839
LAND ROVER
Discovery III 605

LR-BJ-7928
LAND ROVER
Range Rover Sport (02/2005 -> 03/2013) 621

LR-BJ-7932
LAND ROVER
Range Rover Sport (02/2005 -> 03/2013) 621

LR-BJ-7933
LAND ROVER
Range Rover Sport (02/2005 -> 03/2013) 621

LR-BJ-8089
LAND ROVER
Freelander II 613

LR-DL-10719
LAND ROVER
Range Rover II (07/1994 -> 03/2002) 615

LR-DS-12603
LAND ROVER
Range Rover II (07/1994 -> 03/2002) 615

LR-DS-4213
LAND ROVER
Discovery II 603

LR-DS-5015
LAND ROVER
90 - 110 / Defender / Range Rover I 601

LR-DS-5016
LAND ROVER
Discovery II 603

LR-DS-5017
LAND ROVER
Discovery II 603

LR-DS-5032
LAND ROVER
Freelander I 611

LR-DS-5048
LAND ROVER
Freelander I 611

LR-DS-5053
LAND ROVER
Range Rover II (07/1994 -> 03/2002) 615

LR-DS-5054
LAND ROVER
Range Rover II (07/1994 -> 03/2002) 615

LR-ES-12551
LAND ROVER
Range Rover Sport (02/2005 -> 03/2013) 621

LR-ES-13411
LAND ROVER
Evoque 609

LR-ES-13412
LAND ROVER
Evoque 609

LR-ES-13987
LAND ROVER
Discovery III 605
Discovery IV 607

LR-ES-14791
LAND ROVER
Range Rover IV (08/2012 ->) 619
Range Rover Sport (04/2013) 623

LR-ES-1921
LAND ROVER
Freelander I 611

LR-ES-1923
LAND ROVER
Freelander I 611

LR-ES-2684
LAND ROVER
Discovery II 603

LR-ES-3528
LAND ROVER
Range Rover III (03/2002 -> 08/2012) 617

LR-ES-5018
LAND ROVER
Discovery III 605

LR-ES-5019
LAND ROVER
Discovery III 605

LR-ES-5052
LAND ROVER
Range Rover II (07/1994 -> 03/2002) 615

LR-ES-7043
LAND ROVER
Range Rover Sport (02/2005 -> 03/2013) 621

LR-LS-10624
LAND ROVER
Range Rover III (03/2002 -> 08/2012) 617

LR-LS-13413
LAND ROVER
Evoque 609

LR-LS-14641
LAND ROVER
Range Rover IV (08/2012 ->) 619
Range Rover Sport (04/2013) 623

LR-LS-14643
LAND ROVER
Range Rover Sport (04/2013) 623

LR-LS-14644
LAND ROVER
Range Rover Sport (04/2013) 623

LR-LS-14865
LAND ROVER
Range Rover IV (08/2012 ->) 619

LR-LS-14866
LAND ROVER
Range Rover IV (08/2012 ->) 619

LR-LS-1866
LAND ROVER
Freelander I 611

LR-LS-2681
LAND ROVER
90 - 110 / Defender / Range Rover I 601

LR-LS-2682
LAND ROVER
Discovery II 603

LR-LS-2683
LAND ROVER
Discovery II 603

LR-LS-3310
LAND ROVER
Range Rover II (07/1994 -> 03/2002) 615

LR-LS-4013
LAND ROVER
Range Rover III (03/2002 -> 08/2012) 617

LR-LS-4045
LAND ROVER
Discovery III 605
Discovery IV 607

LR-LS-4053
LAND ROVER
Range Rover III (03/2002 -> 08/2012) 617

LR-LS-4189
LAND ROVER
Discovery III 605

LR-LS-7011
LAND ROVER
Range Rover Sport (02/2005 -> 03/2013) 621

LR-LS-7042
LAND ROVER
Range Rover Sport (02/2005 -> 03/2013) 621

LR-LS-8087
LAND ROVER
Evoque 609
Freelander II 613

LR-LS-8088
LAND ROVER
Freelander II 613

LR-LS-8913
LAND ROVER
Range Rover Sport (02/2005 -> 03/2013) 621

LR-SB-12552
LAND ROVER
Discovery III 605

LR-SB-12553
LAND ROVER
Discovery III 605

LR-SB-12554
LAND ROVER
Freelander I 611

LR-SB-12555
LAND ROVER
Freelander II 613

LR-SB-12556
LAND ROVER
Evoque 609
Freelander I 611
Freelander II 613

LR-SB-12557
LAND ROVER
Freelander I 611
Freelander II 613

LR-SB-12558
LAND ROVER
Freelander II 613

LR-SB-12563
LAND ROVER
Freelander II 613

LR-SB-13387
LAND ROVER
Range Rover Sport (02/2005 -> 03/2013) 621

LR-SB-13388
LAND ROVER
Range Rover Sport (02/2005 -> 03/2013) 621

LR-SB-13763
LAND ROVER
Range Rover III (03/2002 -> 08/2012) 617

LR-SB-13764
LAND ROVER
Range Rover II (07/1994 -> 03/2002) 615

LR-SB-13967
LAND ROVER
Range Rover Sport (02/2005 -> 03/2013) 621

LR-SB-13971
LAND ROVER
Discovery IV 607

LR-SB-14555
LAND ROVER
Evoque 609

LR-SB-14839
LAND ROVER
Range Rover Sport (02/2005 -> 03/2013) 621
Range Rover Sport (04/2013) 623

LR-SB-14844
LAND ROVER
Range Rover Sport (04/2013) 623

LR-SB-14851
LAND ROVER
Range Rover IV (08/2012 ->) 619

LR-SB-14852
LAND ROVER
Range Rover IV (08/2012 ->) 619

LR-SB-14855
LAND ROVER
Range Rover IV (08/2012 ->) 619

LR-SB-14860
LAND ROVER
Range Rover IV (08/2012 ->) 619
Range Rover Sport (04/2013) 623

LR-SB-14863
LAND ROVER
Range Rover IV (08/2012 ->) 619

LR-SB-14864
LAND ROVER
Range Rover Sport (04/2013) 623

LR-SB-14869
LAND ROVER
Range Rover Sport (04/2013) 623

LR-SB-14951
LAND ROVER
Range Rover III (03/2002 -> 08/2012) 617

LR-SB-5031
LAND ROVER
Freelander I 611

LR-SB-5059
LAND ROVER
Range Rover III (03/2002 -> 08/2012) 617

LR-SB-6577
LAND ROVER
Freelander I 611

LR-SB-6578
LAND ROVER
Range Rover III (03/2002 -> 08/2012) 617

LR-SB-7135
LAND ROVER
90 - 110 / Defender / Range Rover I 601

LR-SB-7929
LAND ROVER
Range Rover Sport (02/2005 -> 03/2013) 621

LR-SB-7930
LAND ROVER
Range Rover Sport (02/2005 -> 03/2013) 621

LR-SB-7931
LAND ROVER
Range Rover Sport (02/2005 -> 03/2013) 621

LR-SB-8458
LAND ROVER
Discovery III 605

LR-SB-8459
LAND ROVER
Discovery III 605

LR-SB-8460
LAND ROVER
Discovery III 605

LR-SB-8461
LAND ROVER
Discovery III 605
Range Rover Sport (02/2005 -> 03/2013) 621

LR-SB-8463
LAND ROVER
Discovery III 605

LR-SB-8464
LAND ROVER
Discovery III 605
Range Rover Sport (02/2005 -> 03/2013) 621

LR-SB-9835
LAND ROVER
Freelander I 611

LR-SB-9838
LAND ROVER
Freelander I 611

LR-SB-9840
LAND ROVER
Range Rover III (03/2002 -> 08/2012) 617
Range Rover Sport (02/2005 -> 03/2013) 621

LR-SB-9842
LAND ROVER
Freelander II 613

LR-TC-14533
LAND ROVER
Evoque 609

LR-TC-14534
LAND ROVER
Evoque 609

LR-TC-14753
LAND ROVER
Range Rover IV (08/2012 ->) 619

LR-TC-14754
LAND ROVER
Range Rover IV (08/2012 ->) 619

LR-TC-14755
LAND ROVER
Range Rover IV (08/2012 ->) 619
Range Rover Sport (04/2013) 623

LR-TC-14756
LAND ROVER
Range Rover IV (08/2012 ->) 619
Range Rover Sport (04/2013) 623

LR-TC-14849
LAND ROVER
Range Rover IV (08/2012 ->) 619

LR-TC-14850
LAND ROVER
Range Rover IV (08/2012 ->) 619

LR-TC-14857
LAND ROVER
Range Rover IV (08/2012 ->) 619

...LR-TC-14857
Range Rover Sport 623

LR-TC-14861
LAND ROVER
Range Rover IV (08/2012 ->) 619

LR-TC-14862
LAND ROVER
Range Rover IV (08/2012 ->) 619

LR-TC-14867
LAND ROVER
Range Rover Sport (04/2013) 623

LR-TC-14868
LAND ROVER
Range Rover Sport (04/2013) 623

LR-TC-1924
LAND ROVER
Freelander I 611

LR-TC-1927
LAND ROVER
Freelander I 611

LR-TC-5049
LAND ROVER
Freelander I 611

LR-TC-5050
LAND ROVER
Freelander I 611

LR-TC-5051
LAND ROVER
Freelander I 611

LR-TC-5055
LAND ROVER
Range Rover III (03/2002 -> 08/2012) 617

LR-TC-5056
LAND ROVER
Range Rover III (03/2002 -> 08/2012) 617

LR-TC-5057
LAND ROVER
Range Rover III (03/2002 -> 08/2012) 617

LR-WP-12525
LAND ROVER
Discovery III 605

LR-WP-12526
LAND ROVER
Discovery III 605

LR-WP-13603
LAND ROVER
Discovery III 605
Discovery IV 607

LR-WP-13604
LAND ROVER
Discovery III 605

...LR-WP-13604
Discovery IV 607

LR-WP-15149
LAND ROVER
Discovery IV 607

LR-WP-15150
LAND ROVER
Discovery IV 607

LR-WP-6999
LAND ROVER
Range Rover Sport (02/2005 -> 03/2013) 621

LR-WP-7000
LAND ROVER
Range Rover Sport (02/2005 -> 03/2013) 621

LR-WP-8344
LAND ROVER
Freelander II 613

LR-WP-8345
LAND ROVER
Freelander II 613

MD-AX-0010
MAZDA
6 (08/2002 ->) [GG, GY] 637

MD-AX-10524
MAZDA
CX-7 [ER] 653

MD-AX-13906
MAZDA
CX-5 [KE, GH] 651

MD-AX-14929
MAZDA
2 (2008 ->) [DE] 627

MD-AX-15089
MAZDA
3 (09/2013 ->) [BM, BN] 633

MD-AX-1687
KIA
Clarus 539
Shuma II 557

MD-AX-1716
KIA
Pride [DA] 547

MD-AX-1808
MAZDA
323 V [BA] 643

MD-AX-2216
MAZDA
323 VI [BJ] 645
Premacy 663

MD-AX-2218
MAZDA
323 VI [BJ] 645

...MD-AX-2218
Premacy 663

MD-AX-2348
MAZDA
626 V [GF, GW] 647

MD-AX-2685
MAZDA
Demio 655

MD-AX-2692
MAZDA
Demio 655

MD-AX-2700
MAZDA
MX-5 II (05/1998 ->) 661

MD-AX-2701
MAZDA
MX-5 II (05/1998 ->) 661

MD-AX-2710
MAZDA
MPV II (09/1999 ->) 659

MD-AX-3072
MAZDA
323 V [BA] 643

MD-AX-3888
MAZDA
3 (2003 -> 2009) [BK] 631
5 [CR19] 635

MD-AX-3973
MAZDA
MPV I (-> 09/1999) 657

MD-AX-8887
MAZDA
6 (08/2007 ->) [GH] 639

MD-BJ-0747
KIA
Carens I - II [FC, FJ] 527
Shuma I 555
Shuma II 557

MD-BJ-104144
KIA
Clarus 539
MAZDA
626 V [GF, GW] 647

MD-BJ-104147
MAZDA
323 V [BA] 643

MD-BJ-104185
MAZDA
323 V [BA] 643

MD-BJ-10688
FORD
Ranger [ER, EQ] 403

...MD-BJ-10688
MAZDA
B-Serie (1999 ->) 649

MD-BJ-1171
KIA
Sephia 553

MD-BJ-13905
MAZDA
3 (09/2013 ->) [BM, BN] 633
CX-5 [KE, GH] 651

MD-BJ-13931
MAZDA
CX-7 [ER] 653

MD-BJ-1618
KIA
Sportage I (04/1994 ->) [K00] 563

MD-BJ-2291
MAZDA
6 (08/2002 ->) [GG, GY] 637
6 (08/2007 ->) [GH] 639

MD-BJ-2327
MAZDA
323 VI [BJ] 645
Premacy 663

MD-BJ-2703
MAZDA
MX-5 II (05/1998 ->) 661

MD-BJ-2711
MAZDA
MPV II (09/1999 ->) 659

MD-BJ-3935
KIA
Sorento I 559

MD-BJ-4869
MAZDA
3 (2003 -> 2009) [BK] 631
5 [CR19] 635

MD-BJ-5168
MAZDA
B-Serie (1999 ->) 649

MD-DS-1717
KIA
Sportage I (04/1994 ->) [K00] 563

MD-DS-1772
KIA
Carnival I - II [UP, GQ] 531

MD-DS-1816
KIA
Sportage I (04/1994 ->) [K00] 563

MD-ES-0621
MAZDA
323 VI [BJ] 645

...MD-ES-0621
626 V [GF, GW] 647
MPV II (09/1999 ->) 659
Premacy 663

MD-ES-0786
KIA
Carens I - II [FC, FJ] 527
Cerato [LD] 537
Clarus 539
Sephia 553
Shuma I 555
Shuma II 557

MD-ES-10525
MAZDA
6 (08/2007 ->) [GH] 639

MD-ES-10526
MAZDA
6 (08/2007 ->) [GH] 639

MD-ES-10527
MAZDA
CX-7 [ER] 653

MD-ES-10528
MAZDA
CX-7 [ER] 653

MD-ES-10685
MAZDA
2 (2008 ->) [DE] 627

MD-ES-10686
MAZDA
2 (2008 ->) [DE] 627

MD-ES-13871
MAZDA
CX-5 [KE, GH] 651

MD-ES-15087
MAZDA
3 (09/2013 ->) [BM, BN] 633

MD-ES-15088
MAZDA
3 (09/2013 ->) [BM, BN] 633

MD-ES-1655
MAZDA
MX-5 II (05/1998 ->) 661

MD-ES-1665
MAZDA
MPV I (-> 09/1999) 657

MD-ES-1815
KIA
Carnival I - II [UP, GQ] 531

MD-ES-2361
MAZDA
6 (08/2002 ->) [GG, GY] 637

MD-ES-2362
MAZDA
6 (08/2002 ->) [GG, GY] 637

MD-ES-2704
MAZDA
Xedos 9 665

MD-ES-2705
MAZDA
Xedos 9 665

MD-ES-2712
MAZDA
B-Serie (1999 ->) 649

MD-ES-2713
MAZDA
B-Serie (1999 ->) 649

MD-ES-2827
KIA
Pride [DA] 547

MD-ES-3251
MAZDA
323 V [BA] 643
Demio 655

MD-ES-3926
KIA
Sorento I 559

MD-ES-3934
KIA
Sorento I 559

MD-ES-4717
MAZDA
3 (2003 -> 2009) [BK] 631
5 [CR19] 635

MD-ES-4718
MAZDA
3 (2003 -> 2009) [BK] 631
5 [CR19] 635

MD-ES-4720
MAZDA
B-Serie (1999 ->) 649

MD-LS-0972
MAZDA
323 V [BA] 643

MD-LS-1117
MAZDA
323 V [BA] 643
626 V [GF, GW] 647

MD-LS-1127
MAZDA
323 V [BA] 643
626 V [GF, GW] 647

MD-LS-1181
MAZDA
323 VI [BJ] 645
Premacy 663

MD-LS-13870
MAZDA
CX-5 [KE, GH] 651

MD-LS-13897
MAZDA
3 (09/2013 ->) [BM, BN] 633
6 (08/2007 ->) [GH] 639
CX-5 [KE, GH] 651

MD-LS-14572
MAZDA
3 (09/2013 ->) [BM, BN] 633
6 (08/2007 ->) [GH] 639
CX-5 [KE, GH] 651

MD-LS-14985
MAZDA
3 (2003 -> 2009) [BK] 631
5 [CR19] 635

MD-LS-15085
MAZDA
3 (09/2013 ->) [BM, BN] 633

MD-LS-15086
MAZDA
3 (09/2013 ->) [BM, BN] 633

MD-LS-2636
MAZDA
323 VI [BJ] 645
Premacy 663

MD-LS-2689
MAZDA
Demio 655

MD-LS-2693
MAZDA
MX-5 II (05/1998 ->) 661

MD-LS-2694
MAZDA
MX-5 II (05/1998 ->) 661

MD-LS-3315
MAZDA
626 V [GF, GW] 647

MD-LS-3627
MAZDA
323 VI [BJ] 645
Premacy 663

MD-LS-3881
MAZDA
323 VI [BJ] 645
MPV II (09/1999 ->) 659

MD-LS-3895
KIA
Sportage I (04/1994 ->) [K00] 563

MD-LS-3942
KIA
Sorento I 559

MD-LS-3981
KIA
Sorento I 559

MD-LS-3982
KIA
Sorento I 559

MD-LS-4026
MAZDA
6 (08/2002 ->) [GG, GY] 637

MD-LS-4395
MAZDA
6 (08/2002 ->) [GG, GY] 637

MD-LS-4396
MAZDA
6 (08/2002 ->) [GG, GY] 637

MD-LS-4434
MAZDA
Xedos 9 665

MD-LS-4435
MAZDA
Xedos 9 665

MD-LS-4436
MAZDA
Xedos 9 665

MD-LS-7400
MAZDA
MPV II (09/1999 ->) 659

MD-LS-9006
MAZDA
6 (08/2007 ->) [GH] 639

MD-LS-9089
MAZDA
6 (08/2007 ->) [GH] 639

MD-LS-9090
MAZDA
6 (08/2007 ->) [GH] 639

MD-SB-10608
KIA
Pride [DA] 547

MD-SB-10651
MAZDA
2 (2008 ->) [DE] 627

MD-SB-10661
MAZDA
3 (2003 -> 2009) [BK] 631

MD-SB-10662
MAZDA
6 (08/2002 ->) [GG, GY] 637

MD-SB-10663
MAZDA
626 V [GF, GW] 647

MD-SB-10664
MAZDA
626 V [GF, GW] 647

MD-SB-10687
MAZDA
6 (08/2002 ->) [GG, GY] 637

MD-SB-12575
MAZDA
6 (08/2007 ->) [GH] 639

MD-SB-12578
MAZDA
6 (08/2007 ->) [GH] 639

MD-SB-13356
MAZDA
5 [CR19] 635

MD-SB-13838
MAZDA
2 (2008 ->) [DE] 627

MD-SB-13900
MAZDA
CX-5 [KE, GH] 651

MD-SB-13903
MAZDA
3 (09/2013 ->) [BM, BN] 633
CX-5 [KE, GH] 651

MD-SB-13904
MAZDA
3 (09/2013 ->) [BM, BN] 633
CX-5 [KE, GH] 651

MD-SB-14077
MAZDA
5 [CR19] 635

MD-SB-14651
MAZDA
2 (11/2014 ->) [DJ, DL] 629
3 (09/2013 ->) [BM, BN] 633
CX-5 [KE, GH] 651

MD-SB-14652
MAZDA
6 (08/2007 ->) [GH] 639
CX-5 [KE, GH] 651

MD-SB-14653
MAZDA
CX-5 [KE, GH] 651

MD-SB-14654
MAZDA
CX-5 [KE, GH] 651

MD-SB-14655
MAZDA
CX-5 [KE, GH] 651

MD-SB-14656
MAZDA
CX-5 [KE, GH] 651

MD-SB-14659
MAZDA
CX-5 [KE, GH] 651

MD-SB-2363
MAZDA
6 (08/2002 ->) [GG, GY] 637

MD-SB-2364
MAZDA
6 (08/2002 ->) [GG, GY] 637

MD-SB-2365
MAZDA
6 (08/2002 ->) [GG, GY] 637

MD-SB-4859
MAZDA
323 VI [BJ] 645
Premacy 663

MD-SB-4917
MAZDA
323 VI [BJ] 645
Premacy 663

MD-SB-6720
KIA
Pride [DA] 547

MD-SB-9844
MAZDA
323 V [BA] 643

MD-SB-9856
MAZDA
6 (08/2002 ->) [GG, GY] 637

MD-SB-9858
MAZDA
323 VI [BJ] 645

MD-SB-9870
MAZDA
323 V [BA] 643

MD-SB-9872
MAZDA
323 VI [BJ] 645

MD-SB-9874
MAZDA
323 V [BA] 643

MD-SB-9878
MAZDA
626 V [GF, GW] 647

MD-SB-9880
MAZDA
626 V [GF, GW] 647

MD-SB-9881
MAZDA
626 V [GF, GW] 647

MD-SB-9884
MAZDA
6 (08/2002 ->) [GG, GY] 637

MD-TC-0813
KIA
Pride [DA] 547

MD-TC-13898
MAZDA
CX-5 [KE, GH] 651

MD-TC-15235
MAZDA
CX-7 [ER] 653

MD-TC-15236
MAZDA
CX-7 [ER] 653

MD-TC-4866
MAZDA
MPV I (-> 09/1999) 657

MD-WP-0973
MAZDA
323 V [BA] 643

MD-WP-0974
MAZDA
323 V [BA] 643

MD-WP-0975
MAZDA
626 V [GF, GW] 647

MD-WP-0976
MAZDA
626 V [GF, GW] 647

MD-WP-12573
MAZDA
6 (08/2007 ->) [GH] 639

MD-WP-12574
MAZDA
6 (08/2007 ->) [GH] 639

MD-WP-12579
MAZDA
6 (08/2007 ->) [GH] 639

MD-WP-12580
MAZDA
6 (08/2007 ->) [GH] 639

MD-WP-13901
MAZDA
CX-5 [KE, GH] 651

MD-WP-13902
MAZDA
CX-5 [KE, GH] 651

MD-WP-2324
MAZDA
323 VI [BJ] 645

MD-WP-2325
MAZDA
323 VI [BJ] 645

MD-WP-2356
MAZDA
6 (08/2002 ->) [GG, GY] 637

MD-WP-2357
MAZDA
6 (08/2002 ->) [GG, GY] 637

MD-WP-2358
MAZDA
6 (08/2002 ->) [GG, GY] 637

MD-WP-2359
MAZDA
6 (08/2002 ->) [GG, GY] 637

MD-WP-2360
MAZDA
6 (08/2002 ->) [GG, GY] 637

MD-WP-2690
MAZDA
Demio 655

MD-WP-2691
MAZDA
Demio 655

MD-WP-3962
KIA
Sorento I 559

MD-WP-3963
KIA
Sorento I 559

MD-WP-4426
MAZDA
3 (2003 -> 2009) [BK] 631
5 [CR19] 635

MD-WP-4427
MAZDA
3 (2003 -> 2009) [BK] 631
5 [CR19] 635

ME-AX-0979
MERCEDES-BENZ
M-Class [163] 717

ME-AX-10146
MERCEDES-BENZ
E-Class [212, 207] 705

ME-AX-13322
MERCEDES-BENZ
A-Class [176] / B-Class [246] 671
CLA [117] 683

ME-AX-13694
MERCEDES-BENZ
E-Class [211] 701

ME-AX-13792
MERCEDES-BENZ
E-Class [212, 207] 705
GLK-Class [204] 715

ME-AX-13817
MERCEDES-BENZ
GL-Class [166] 713
M-Class [166] 721

ME-AX-13995
SMART
Fortwo Coupé - Cabrio [451] 1171

ME-AX-14590
MERCEDES-BENZ
C-Class [205] 681

ME-AX-1530
MERCEDES-BENZ
A-Class [168] 667

ME-AX-15337
MERCEDES-BENZ
C-Class [204] 677
E-Class [212, 207] 705

ME-AX-2071
MERCEDES-BENZ
A-Class [169] / B-Class [245] 669

ME-AX-2073
MERCEDES-BENZ
A-Class [169] / B-Class [245] 669

ME-AX-2266
MERCEDES-BENZ
C-Class [203] 675
CLC-Class [203] 685
CLK [209] 689
CLS [219] 691
E-Class [211] 701
S-Class [220] 729
SL [230] 733

ME-AX-2754
MERCEDES-BENZ
Vaneo [414] 743

ME-AX-4190
MERCEDES-BENZ
Vito II - Viano [639] 747

ME-AX-4874
MERCEDES-BENZ
Sprinter II [906] 741
VW
Crafter (04/2006 ->) [2E_ - 2F_] 1405

ME-AX-5173
MERCEDES-BENZ
S-Class [216, 221] 725

ME-AX-5596
MERCEDES-BENZ
GL-Class [164] 711
M-Class [164] 719
R-Class [251] 723

ME-AX-5674
MERCEDES-BENZ
C-Class [204] 677

ME-AX-5684
MERCEDES-BENZ
A-Class [169] / B-Class [245] 669

ME-AX-6338
MERCEDES-BENZ
E-Class [210] 697

ME-AX-6341
MERCEDES-BENZ
V-Class / Vito I [638] 745

ME-AX-6343
MERCEDES-BENZ
Sprinter I [901, 902, 903, 904, 905] 739
VW
LT II 28-46 1435

ME-AX-7294
MERCEDES-BENZ
SLK [171] 737

ME-AX-7769
MERCEDES-BENZ
C-Class [204] 677

ME-AX-8002
MERCEDES-BENZ
E-Class [210] 697

ME-BJ-0366
MERCEDES-BENZ
V-Class / Vito I [638] 745

ME-BJ-0980
MERCEDES-BENZ
M-Class [163] 717

ME-BJ-0981
MERCEDES-BENZ
M-Class [163] 717

ME-BJ-10684
MERCEDES-BENZ
E-Class [212, 207] 705

ME-BJ-10749
SMART
Fortwo Coupé - Cabrio [451] 1171

ME-BJ-13818
MERCEDES-BENZ
GL-Class [166] 713
M-Class [166] 721

ME-BJ-1531
MERCEDES-BENZ
A-Class [168] 667

ME-BJ-15457
MERCEDES-BENZ
Sprinter I [901, 902, 903, 904, 905] 739

ME-BJ-2075
MERCEDES-BENZ
A-Class [169] / B-Class [245] 669

ME-BJ-2099
SMART
City Coupé - Cabrio - Fortwo I [450] 1167

ME-BJ-2725
MERCEDES-BENZ
CLS [219] 691
E-Class [211] 701
SL [230] 733

ME-BJ-2749
MERCEDES-BENZ
Vaneo [414] 743

ME-BJ-3697
MERCEDES-BENZ
CLS [219] 691
E-Class [211] 701
S-Class [220] 729
SL [230] 733

ME-BJ-4392
MERCEDES-BENZ
Vito II - Viano [639] 747

ME-BJ-4952
MERCEDES-BENZ
Sprinter II [906] 741
VW
Crafter (04/2006 ->) [2E_ - 2F_] 1405

ME-BJ-5150
MITSUBISHI
Colt VI (06/2004 ->) 771
SMART
Forfour (01/2004 -> 06/2006) [454] 1169

ME-BJ-5597
MERCEDES-BENZ
GL-Class [164] 711
M-Class [164] 719
R-Class [251] 723

ME-BJ-5598
MERCEDES-BENZ
GL-Class [164] 711
M-Class [164] 719
R-Class [251] 723

ME-BJ-6301
MERCEDES-BENZ
E-Class [124] 693
SL [129] 731

ME-BJ-6313
MERCEDES-BENZ
C-Class [202] 673
C-Class [203] 675
CLK [208] 687
CLK [209] 689
E-Class [124] 693
E-Class [210] 697
SL [129] 731
SLK [170] 735

ME-BJ-6331
MERCEDES-BENZ
C-Class [202] 673
CLK [208] 687
E-Class [210] 697
SLK [170] 735

ME-BJ-6345
MERCEDES-BENZ
Sprinter I [901, 902, 903, 904, 905] 739

...ME-BJ-6345
VW
LT II 28-46 1435

ME-BJ-8111
MERCEDES-BENZ
CLS [219] 691
E-Class [211] 701
SL [230] 733

ME-DL-7950
MERCEDES-BENZ
SL [129] 731

ME-DS-0803
MERCEDES-BENZ
C-Class [202] 673
CLK [208] 687
E-Class [124] 693
E-Class [210] 697
SL [129] 731
SLK [170] 735

ME-DS-12601
MERCEDES-BENZ
SLK [170] 735

ME-DS-4175
MERCEDES-BENZ
SLK [170] 735

ME-DS-4178
MERCEDES-BENZ
C-Class [202] 673
CLK [208] 687

ME-DS-5491
MERCEDES-BENZ
E-Class [124] 693

ME-DS-5492
MERCEDES-BENZ
E-Class [124] 693

ME-DS-6300
MERCEDES-BENZ
C-Class [202] 673
CLK [208] 687
E-Class [124] 693
E-Class [210] 697
SL [129] 731
SLK [170] 735

ME-DS-6308
MERCEDES-BENZ
E-Class [124] 693

ME-DS-6317
MERCEDES-BENZ
E-Class [124] 693

ME-DS-6329
MERCEDES-BENZ
C-Class [202] 673
CLK [208] 687

ME-DS-6333
MERCEDES-BENZ
E-Class [124] 693

ME-ES-0977
MERCEDES-BENZ
M-Class [163] 717

ME-ES-0978
MERCEDES-BENZ
M-Class [163] 717

ME-ES-10147
MERCEDES-BENZ
E-Class [212, 207] 705

ME-ES-10148
MERCEDES-BENZ
E-Class [212, 207] 705

ME-ES-10705
MERCEDES-BENZ
C-Class [203] 675

ME-ES-10706
MERCEDES-BENZ
C-Class [203] 675

ME-ES-13435
MERCEDES-BENZ
A-Class [176] / B-Class [246] 671
CLA [117] 683
GLA-Class [156] 707

ME-ES-13436
MERCEDES-BENZ
A-Class [176] / B-Class [246] 671
CLA [117] 683
GLA-Class [156] 707

ME-ES-13913
MERCEDES-BENZ
E-Class [212, 207] 705

ME-ES-13914
MERCEDES-BENZ
E-Class [212, 207] 705

ME-ES-13977
MERCEDES-BENZ
GL-Class [166] 713
M-Class [166] 721

ME-ES-14841
MERCEDES-BENZ
E-Class [211] 701
S-Class [220] 729

ME-ES-14842
MERCEDES-BENZ
E-Class [211] 701
S-Class [220] 729

ME-ES-15111
MERCEDES-BENZ
C-Class [205] 681

ME-ES-15112
MERCEDES-BENZ
C-Class [205] 681

ME-ES-15171
MERCEDES-BENZ
C-Class [205] 681

ME-ES-15172
MERCEDES-BENZ
C-Class [205] 681

ME-ES-1528
MERCEDES-BENZ
A-Class [168] 667

ME-ES-1529
MERCEDES-BENZ
A-Class [168] 667

ME-ES-1703
MERCEDES-BENZ
E-Class [124] 693

ME-ES-2072
MERCEDES-BENZ
A-Class [169] / B-Class [245] 669

ME-ES-2074
MERCEDES-BENZ
A-Class [169] / B-Class [245] 669

ME-ES-2079
MITSUBISHI
Colt VI (06/2004 ->) 771
SMART
Forfour (01/2004 -> 06/2006) [454] 1169

ME-ES-2284
MERCEDES-BENZ
C-Class [203] 675
CLC-Class [203] 685
CLK [209] 689
SLK [171] 737

ME-ES-2285
MERCEDES-BENZ
C-Class [203] 675
CLC-Class [203] 685
CLK [209] 689
SLK [171] 737

ME-ES-2728
MERCEDES-BENZ
CLS [219] 691
E-Class [211] 701

ME-ES-2729
MERCEDES-BENZ
CLS [219] 691
E-Class [211] 701

ME-ES-2750
MERCEDES-BENZ
Vaneo [414] 743

ME-ES-2751
MERCEDES-BENZ
Vaneo [414] 743

ME-ES-2853
SMART
City Coupé - Cabrio - Fortwo I [450] 1167

ME-ES-4181
MERCEDES-BENZ
S-Class [220] 729

ME-ES-4393
MERCEDES-BENZ
Vito II - Viano [639] 747

ME-ES-4394
MERCEDES-BENZ
Vito II - Viano [639] 747

ME-ES-4953
MERCEDES-BENZ
Sprinter II [906] 741
VW
Crafter (04/2006 ->) [2E_ - 2F_] 1405

ME-ES-5172
MERCEDES-BENZ
S-Class [216, 221] 725

ME-ES-5593
MERCEDES-BENZ
R-Class [251] 723

ME-ES-5594
MERCEDES-BENZ
R-Class [251] 723

ME-ES-5599
MERCEDES-BENZ
GL-Class [164] 711
M-Class [164] 719

ME-ES-5600
MERCEDES-BENZ
GL-Class [164] 711
M-Class [164] 719

ME-ES-5648
MERCEDES-BENZ
C-Class [204] 677

ME-ES-5649
MERCEDES-BENZ
C-Class [204] 677

ME-ES-6129
MERCEDES-BENZ
E-Class [124] 693

ME-ES-6310
MERCEDES-BENZ
E-Class [124] 693

ME-ES-6330
MERCEDES-BENZ
C-Class [202] 673
CLK [208] 687
SLK [170] 735

ME-ES-6334
MERCEDES-BENZ
E-Class [124] 693
SL [129] 731

ME-ES-6335
MERCEDES-BENZ
E-Class [124] 693
SL [129] 731

ME-ES-6339
MERCEDES-BENZ
E-Class [210] 697

ME-ES-6340
MERCEDES-BENZ
E-Class [210] 697

ME-ES-6342
MERCEDES-BENZ
V-Class / Vito I [638] 745

ME-ES-6344
MERCEDES-BENZ
Sprinter I [901, 902, 903, 904, 905] 739
VW
LT II 28-46 1435

ME-ES-7770
MERCEDES-BENZ
C-Class [204] 677

ME-ES-7771
MERCEDES-BENZ
C-Class [204] 677

ME-ES-9091
MERCEDES-BENZ
GLK-Class [204] 715

ME-ES-9092
MERCEDES-BENZ
GLK-Class [204] 715

ME-LS-0435
MERCEDES-BENZ
V-Class / Vito I [638] 745

ME-LS-0436
MERCEDES-BENZ
V-Class / Vito I [638] 745

ME-LS-0489
MERCEDES-BENZ
A-Class [168] 667

ME-LS-0725
MERCEDES-BENZ
E-Class [210] 697

ME-LS-0726
MERCEDES-BENZ
E-Class [210] 697

ME-LS-10158
SMART
Fortwo Coupé - Cabrio [451] 1171

ME-LS-10471
MERCEDES-BENZ
E-Class [212, 207] 705

ME-LS-10472
MERCEDES-BENZ
E-Class [212, 207] 705

ME-LS-10529
MERCEDES-BENZ
C-Class [204] 677
GLK-Class [204] 715

ME-LS-10530
MERCEDES-BENZ
C-Class [204] 677
GLK-Class [204] 715

ME-LS-12538
MERCEDES-BENZ
Vito II - Viano [639] 747

ME-LS-13437
MERCEDES-BENZ
A-Class [176] / B-Class [246] 671
CLA [117] 683
GLA-Class [156] 707

ME-LS-13438
MERCEDES-BENZ
A-Class [176] / B-Class [246] 671
CLA [117] 683
GLA-Class [156] 707

ME-LS-13695
MERCEDES-BENZ
S-Class [216, 221] 725

ME-LS-13696
MERCEDES-BENZ
S-Class [216, 221] 725

ME-LS-13911
MERCEDES-BENZ
E-Class [212, 207] 705

ME-LS-13912
MERCEDES-BENZ
E-Class [212, 207] 705

ME-LS-13975
MERCEDES-BENZ
GL-Class [166] 713
M-Class [166] 721

ME-LS-13976
MERCEDES-BENZ
GL-Class [166] 713
M-Class [166] 721

ME-LS-14645
MERCEDES-BENZ
C-Class [205] 681

ME-LS-14646
MERCEDES-BENZ
C-Class [205] 681

MOOG

ME-LS-14771
MERCEDES-BENZ
E-Class [211] 701

ME-LS-14772
MERCEDES-BENZ
E-Class [211] 701

ME-LS-15113
MERCEDES-BENZ
C-Class [205] 681

ME-LS-15114
MERCEDES-BENZ
C-Class [205] 681

ME-LS-15299
MERCEDES-BENZ
GLC-Class [253] 709

ME-LS-15300
MERCEDES-BENZ
GLC-Class [253] 709

ME-LS-15397
MERCEDES-BENZ
Vito II - Viano [639] 747

ME-LS-15398
MERCEDES-BENZ
Vito II - Viano [639] 747

ME-LS-1654
MERCEDES-BENZ
E-Class [124] 693

ME-LS-1759
MERCEDES-BENZ
C-Class [203] 675
CLC-Class [203] 685
CLK [209] 689

ME-LS-1977
MERCEDES-BENZ
Sprinter I [901, 902, 903, 904, 905] 739
VW
LT II 28-46 1435

ME-LS-1978
MERCEDES-BENZ
Sprinter I [901, 902, 903, 904, 905] 739
VW
LT II 28-46 1435

ME-LS-1979
MERCEDES-BENZ
Sprinter I [901, 902, 903, 904, 905] 739
VW
LT II 28-46 1435

ME-LS-2060
MERCEDES-BENZ
A-Class [169] / B-Class [245] 669

ME-LS-2062
MERCEDES-BENZ
A-Class [169] / B-Class [245] 669

ME-LS-2078
MITSUBISHI
Colt VI (06/2004 ->) 771
SMART
Forfour (01/2004 -> 06/2006) [454] 1169

ME-LS-2248
MERCEDES-BENZ
Vaneo [414] 743
V-Class / Vito I [638] 745

ME-LS-2252
MERCEDES-BENZ
V-Class / Vito I [638] 745

ME-LS-2254
MERCEDES-BENZ
V-Class / Vito I [638] 745

ME-LS-2386
SMART
City Coupé - Cabrio - Fortwo I [450] 1167

ME-LS-2714
MERCEDES-BENZ
S-Class [220] 729

ME-LS-2726
MERCEDES-BENZ
CLS [219] 691
E-Class [211] 701

ME-LS-2727
MERCEDES-BENZ
CLS [219] 691
E-Class [211] 701

ME-LS-2857
SMART
City Coupé - Cabrio - Fortwo I [450] 1167

ME-LS-3316
MERCEDES-BENZ
E-Class [211] 701
SL [230] 733

ME-LS-3542
MERCEDES-BENZ
Vito II - Viano [639] 747

ME-LS-3819
MERCEDES-BENZ
Vito II - Viano [639] 747

ME-LS-4179
MERCEDES-BENZ
S-Class [220] 729

ME-LS-4180
MERCEDES-BENZ
S-Class [220] 729

ME-LS-4389
MERCEDES-BENZ
A-Class [168] 667

ME-LS-4698
MERCEDES-BENZ
GL-Class [164] 711
M-Class [164] 719

ME-LS-4699
MERCEDES-BENZ
GL-Class [164] 711
M-Class [164] 719
R-Class [251] 723

ME-LS-4700
MERCEDES-BENZ
S-Class [216, 221] 725

ME-LS-4701
MERCEDES-BENZ
S-Class [216, 221] 725

ME-LS-4890
MERCEDES-BENZ
Sprinter II [906] 741
VW
Crafter (04/2006 ->) [2E_ - 2F_] 1405

ME-LS-4891
MERCEDES-BENZ
Sprinter II [906] 741
VW
Crafter (04/2006 ->) [2E_ - 2F_] 1405

ME-LS-5144
MERCEDES-BENZ
Vaneo [414] 743

ME-LS-5170
MERCEDES-BENZ
S-Class [216, 221] 725

ME-LS-5171
MERCEDES-BENZ
S-Class [216, 221] 725

ME-LS-5595
MERCEDES-BENZ
R-Class [251] 723

ME-LS-5618
MERCEDES-BENZ
Sprinter II [906] 741
VW
Crafter (04/2006 ->) [2E_ - 2F_] 1405

ME-LS-5628
MERCEDES-BENZ
C-Class [203] 675
CLK [209] 689

ME-LS-5629
MERCEDES-BENZ
C-Class [203] 675

...ME-LS-5629
CLK [209] 689

ME-LS-5678
MERCEDES-BENZ
C-Class [204] 677

ME-LS-5679
MERCEDES-BENZ
C-Class [204] 677

ME-LS-5680
MERCEDES-BENZ
C-Class [204] 677

ME-LS-5681
MERCEDES-BENZ
C-Class [204] 677

ME-LS-5682
MERCEDES-BENZ
C-Class [204] 677
E-Class [212, 207] 705

ME-LS-5683
MERCEDES-BENZ
C-Class [204] 677
E-Class [212, 207] 705

ME-LS-7251
MERCEDES-BENZ
M-Class [163] 717

ME-LS-7252
MERCEDES-BENZ
M-Class [163] 717

ME-LS-7253
MERCEDES-BENZ
M-Class [163] 717

ME-LS-7295
MERCEDES-BENZ
SLK [171] 737

ME-LS-7995
MERCEDES-BENZ
Sprinter I [901, 902, 903, 904, 905] 739

ME-LS-8893
MERCEDES-BENZ
Sprinter I [901, 902, 903, 904, 905] 739

ME-LS-8946
MERCEDES-BENZ
A-Class [169] / B-Class [245] 669

ME-LS-8969
MERCEDES-BENZ
SL [230] 733

ME-LS-8970
MERCEDES-BENZ
SL [230] 733

ME-LS-9010
MERCEDES-BENZ
C-Class [203] 675

...ME-LS-9010
CLC-Class [203] 685

ME-RK-15004
MERCEDES-BENZ
A-Class [168] 667

ME-RK-15020
MERCEDES-BENZ
Sprinter I [901, 902, 903, 904, 905] 739
VW
LT II 28-46 1435

ME-RK-15031
MERCEDES-BENZ
V-Class / Vito I [638] 745

ME-RK-15032
MERCEDES-BENZ
A-Class [168] 667

ME-RK-15041
MERCEDES-BENZ
E-Class [210] 697

ME-RK-15042
MERCEDES-BENZ
M-Class [163] 717

ME-RK-15043
MERCEDES-BENZ
Sprinter II [906] 741
VW
Crafter (04/2006 ->) [2E_ - 2F_] 1405

ME-RK-15044
MERCEDES-BENZ
Vito II - Viano [639] 747

ME-RK-15070
MERCEDES-BENZ
C-Class [203] 675
CLC-Class [203] 685
CLK [209] 689
CLS [219] 691
E-Class [211] 701
S-Class [220] 729
SL [230] 733

ME-RK-3607
MERCEDES-BENZ
A-Class [168] 667

ME-RK-3952
MERCEDES-BENZ
C-Class [202] 673
CLK [208] 687
E-Class [124] 693
E-Class [210] 697
SL [129] 731
SLK [170] 735

ME-RK-5592
MERCEDES-BENZ
E-Class [210] 697

ME-RK-6603
MERCEDES-BENZ
C-Class [202] 673
SLK [170] 735

ME-RK-6604
MERCEDES-BENZ
E-Class [210] 697

ME-RK-6605
MERCEDES-BENZ
Sprinter I [901, 902, 903, 904, 905] 739
VW
LT II 28-46 1435

ME-RK-6613
MERCEDES-BENZ
CLS [219] 691
E-Class [211] 701

ME-RK-6614
MERCEDES-BENZ
E-Class [211] 701
SL [230] 733

ME-RK-6615
MERCEDES-BENZ
C-Class [203] 675
CLC-Class [203] 685

ME-RK-7345
MERCEDES-BENZ
C-Class [202] 673

ME-RK-7989
MERCEDES-BENZ
C-Class [202] 673
CLK [208] 687
E-Class [124] 693
E-Class [210] 697
SL [129] 731
SLK [170] 735

ME-SB-10138
MERCEDES-BENZ
A-Class [168] 667

ME-SB-10139
MERCEDES-BENZ
C-Class [202] 673
CLK [208] 687

ME-SB-10142
MERCEDES-BENZ
C-Class [202] 673
C-Class [203] 675
SLK [171] 737

ME-SB-10143
MERCEDES-BENZ
CLS [219] 691
E-Class [211] 701
S-Class [216, 221] 725
S-Class [220] 729
SL [230] 733

ME-SB-10144
MERCEDES-BENZ
CLS [219] 691
E-Class [211] 701
S-Class [216, 221] 725
S-Class [220] 729
SL [230] 733

ME-SB-10145
MERCEDES-BENZ
CLS [219] 691
E-Class [211] 701
S-Class [216, 221] 725
S-Class [220] 729
SL [230] 733

ME-SB-10151
MERCEDES-BENZ
E-Class [211] 701
SL [230] 733

ME-SB-10152
MERCEDES-BENZ
E-Class [211] 701
SL [230] 733

ME-SB-10153
MERCEDES-BENZ
GL-Class [164] 711
M-Class [164] 719
R-Class [251] 723

ME-SB-10154
MERCEDES-BENZ
GL-Class [164] 711
M-Class [164] 719
R-Class [251] 723

ME-SB-10155
MERCEDES-BENZ
S-Class [220] 729

ME-SB-10161
MERCEDES-BENZ
Sprinter I [901, 902, 903, 904, 905] 739

ME-SB-10162
MERCEDES-BENZ
Sprinter I [901, 902, 903, 904, 905] 739
VW
LT II 28-46 1435

ME-SB-10163
MERCEDES-BENZ
Sprinter I [901, 902, 903, 904, 905] 739
VW
LT II 28-46 1435

ME-SB-10165
MERCEDES-BENZ
Sprinter I [901, 902, 903, 904, 905] 739

ME-SB-10166
MERCEDES-BENZ
Sprinter I [901, 902, 903, 904, 905] 739

...ME-SB-10166
Sprinter II [906] 741

ME-SB-10498
MERCEDES-BENZ
E-Class [212, 207] 705

ME-SB-10839
MERCEDES-BENZ
E-Class [212, 207] 705

ME-SB-1209
MERCEDES-BENZ
C-Class [202] 673
C-Class [203] 675
CLK [208] 687
CLK [209] 689
E-Class [124] 693
E-Class [210] 697
SL [129] 731
SLK [170] 735

ME-SB-12500
MERCEDES-BENZ
S-Class [216, 221] 725

ME-SB-12505
MERCEDES-BENZ
CLC-Class [203] 685
SLK [171] 737

ME-SB-12528
MERCEDES-BENZ
S-Class [220] 729

ME-SB-12530
MERCEDES-BENZ
S-Class [216, 221] 725

ME-SB-12531
MERCEDES-BENZ
S-Class [216, 221] 725

ME-SB-12532
MERCEDES-BENZ
S-Class [216, 221] 725

ME-SB-12533
MERCEDES-BENZ
S-Class [216, 221] 725

ME-SB-12534
MERCEDES-BENZ
S-Class [216, 221] 725

ME-SB-12535
MERCEDES-BENZ
S-Class [216, 221] 725

ME-SB-12537
MERCEDES-BENZ
V-Class / Vito I [638] 745

ME-SB-12539
MERCEDES-BENZ
Vito II - Viano [639] 747

ME-SB-12547
MERCEDES-BENZ
Sprinter II [906] 741

...ME-SB-12547

VW

Crafter (04/2006 ->) [2E_ - 2F_] 1405

ME-SB-12586

MERCEDES-BENZ

CLS [219] 691
E-Class [211] 701
SL [230] 733

ME-SB-12641

MERCEDES-BENZ

C-Class [203] 675
CLC-Class [203] 685

ME-SB-12645

MERCEDES-BENZ

A-Class [168] 667

ME-SB-12646

MERCEDES-BENZ

A-Class [168] 667

ME-SB-12686

SMART

Fortwo Coupé - Cabrio [451] 1171

ME-SB-1277

MERCEDES-BENZ

E-Class [210] 697

ME-SB-1294

MERCEDES-BENZ

C-Class [202] 673
C-Class [203] 675
CLK [208] 687
CLK [209] 689
E-Class [124] 693
E-Class [210] 697
SL [129] 731
SLK [170] 735

ME-SB-13334

MERCEDES-BENZ

A-Class [176] / B-Class [246] 671
CLA [117] 683
GLA-Class [156] 707

ME-SB-13337

MERCEDES-BENZ

A-Class [176] / B-Class [246] 671
CLA [117] 683
GLA-Class [156] 707

ME-SB-13338

MERCEDES-BENZ

A-Class [176] / B-Class [246] 671
CLA [117] 683
GLA-Class [156] 707

ME-SB-13486

MERCEDES-BENZ

Sprinter II [906] 741

...ME-SB-13486

VW

Crafter (04/2006 ->) [2E_ - 2F_] 1405

ME-SB-13542

MERCEDES-BENZ

GL-Class [164] 711
M-Class [164] 719
R-Class [251] 723

ME-SB-1356

MERCEDES-BENZ

C-Class [202] 673
SLK [170] 735

ME-SB-1357

MERCEDES-BENZ

E-Class [210] 697

ME-SB-13580

MERCEDES-BENZ

A-Class [176] / B-Class [246] 671

ME-SB-13663

MERCEDES-BENZ

C-Class [203] 675
CLC-Class [203] 685
CLK [209] 689

ME-SB-13689

MERCEDES-BENZ

Sprinter I [901, 902, 903, 904, 905] 739

ME-SB-13798

MERCEDES-BENZ

A-Class [176] / B-Class [246] 671
CLA [117] 683
GLA-Class [156] 707

ME-SB-13799

MERCEDES-BENZ

A-Class [176] / B-Class [246] 671
CLA [117] 683
GLA-Class [156] 707

ME-SB-13801

MERCEDES-BENZ

A-Class [176] / B-Class [246] 671
CLA [117] 683
GLA-Class [156] 707

ME-SB-13918

SMART

Fortwo Coupé - Cabrio [451] 1171

ME-SB-13941

MERCEDES-BENZ

M-Class [163] 717

ME-SB-13978

MERCEDES-BENZ

GL-Class [166] 713

...ME-SB-13978

M-Class [166] 721

ME-SB-14542

MERCEDES-BENZ

GL-Class [164] 711
M-Class [164] 719
R-Class [251] 723

ME-SB-14833

MERCEDES-BENZ

GL-Class [166] 713
M-Class [164] 719
M-Class [166] 721

ME-SB-14834

MERCEDES-BENZ

GL-Class [166] 713
M-Class [164] 719
M-Class [166] 721

ME-SB-14913

MERCEDES-BENZ

A-Class [169] / B-Class [245] 669
A-Class [176] / B-Class [246] 671
CLK [208] 687
E-Class [210] 697

ME-SB-14975

MERCEDES-BENZ

E-Class [210] 697

ME-SB-15161

MERCEDES-BENZ

Vito II - Viano [639] 747

ME-SB-15692

MERCEDES-BENZ

C-Class [203] 675

ME-SB-15695

MERCEDES-BENZ

M-Class [163] 717

ME-SB-1593

MERCEDES-BENZ

C-Class [202] 673
SLK [170] 735

ME-SB-1594

MERCEDES-BENZ

A-Class [168] 667

ME-SB-1595

MERCEDES-BENZ

A-Class [168] 667

ME-SB-1631

MERCEDES-BENZ

E-Class [124] 693

ME-SB-1645

MERCEDES-BENZ

C-Class [202] 673
C-Class [203] 675

...ME-SB-1645

CLK [208] 687
CLK [209] 689
E-Class [124] 693
E-Class [210] 697
SL [129] 731
SLK [170] 735

ME-SB-1749

MERCEDES-BENZ

E-Class [124] 693

ME-SB-2255

MERCEDES-BENZ

V-Class / Vito I [638] 745

ME-SB-2256

MERCEDES-BENZ

V-Class / Vito I [638] 745
Vito II - Viano [639] 747

ME-SB-2275

MERCEDES-BENZ

Sprinter I [901, 902, 903, 904, 905] 739

VW

LT II 28-46 1435

ME-SB-2323

MERCEDES-BENZ

E-Class [124] 693

ME-SB-2336

MERCEDES-BENZ

Sprinter I [901, 902, 903, 904, 905] 739

VW

LT II 28-46 1435

ME-SB-2730

MERCEDES-BENZ

CLS [219] 691
E-Class [211] 701

ME-SB-2732

MERCEDES-BENZ

CLS [219] 691
E-Class [211] 701
SL [230] 733

ME-SB-2733

MERCEDES-BENZ

CLS [219] 691
E-Class [211] 701
SL [230] 733

ME-SB-2758

MERCEDES-BENZ

Vaneo [414] 743

ME-SB-2759

MERCEDES-BENZ

Vaneo [414] 743

ME-SB-3650

MERCEDES-BENZ

Sprinter I [901, 902, 903, 904, 905] 739

...ME-SB-3650

Sprinter II [906] 741

VW

Crafter (04/2006 ->) [2E_ - 2F_] 1405

LT II 28-46 1435

ME-SB-3714

MERCEDES-BENZ

CLS [219] 691

E-Class [211] 701

SL [230] 733

ME-SB-3716

MERCEDES-BENZ

E-Class [211] 701

SL [230] 733

ME-SB-3996

MERCEDES-BENZ

M-Class [163] 717

ME-SB-3997

MERCEDES-BENZ

M-Class [163] 717

ME-SB-4020

SMART

City Coupé - Cabrio - Fortwo I [450] 1167

ME-SB-4186

MERCEDES-BENZ

S-Class [220] 729

ME-SB-4187

MERCEDES-BENZ

S-Class [220] 729

ME-SB-4188

MERCEDES-BENZ

S-Class [220] 729

ME-SB-4414

MERCEDES-BENZ

E-Class [211] 701

SL [230] 733

ME-SB-4457

MERCEDES-BENZ

E-Class [210] 697

ME-SB-4472

MERCEDES-BENZ

E-Class [124] 693

ME-SB-4476

MERCEDES-BENZ

C-Class [202] 673

C-Class [203] 675

CLK [208] 687

CLK [209] 689

E-Class [124] 693

E-Class [210] 697

SL [129] 731

SLK [170] 735

ME-SB-4487

MERCEDES-BENZ

E-Class [124] 693

ME-SB-4490

MERCEDES-BENZ

V-Class / Vito I [638] 745

ME-SB-4494

MERCEDES-BENZ

C-Class [202] 673

CLK [208] 687

E-Class [210] 697

SLK [170] 735

ME-SB-4541

MERCEDES-BENZ

C-Class [202] 673

E-Class [124] 693

SLK [170] 735

ME-SB-5153

MITSUBISHI

Colt VI (06/2004 ->) 771

SMART

Forfour (01/2004 -> 06/2006) [454] 1169

ME-SB-5154

MITSUBISHI

Colt VI (06/2004 ->) 771

SMART

Forfour (01/2004 -> 06/2006) [454] 1169

ME-SB-5169

MERCEDES-BENZ

E-Class [211] 701

S-Class [220] 729

SL [230] 733

ME-SB-5176

MERCEDES-BENZ

S-Class [216, 221] 725

ME-SB-5179

MERCEDES-BENZ

S-Class [216, 221] 725

ME-SB-5182

MERCEDES-BENZ

S-Class [216, 221] 725

ME-SB-5619

MERCEDES-BENZ

Sprinter II [906] 741

VW

Crafter (04/2006 ->) [2E_ - 2F_] 1405

ME-SB-5620

MERCEDES-BENZ

Sprinter II [906] 741

VW

Crafter (04/2006 ->) [2E_ - 2F_] 1405

ME-SB-5626

MERCEDES-BENZ

C-Class [203] 675

...ME-SB-5626

CLC-Class [203] 685

CLK [209] 689

SLK [171] 737

ME-SB-5627

MERCEDES-BENZ

C-Class [203] 675

C-Class [204] 677

CLC-Class [203] 685

CLK [209] 689

SLK [171] 737

ME-SB-5677

MERCEDES-BENZ

C-Class [204] 677

ME-SB-5685

MERCEDES-BENZ

A-Class [169] / B-Class [245] 669

ME-SB-5686

MERCEDES-BENZ

A-Class [169] / B-Class [245] 669

ME-SB-6653

MERCEDES-BENZ

E-Class [124] 693

ME-SB-6657

MERCEDES-BENZ

CLK [208] 687

E-Class [124] 693

SL [129] 731

SLK [170] 735

ME-SB-6658

MERCEDES-BENZ

C-Class [202] 673

CLK [208] 687

E-Class [124] 693

E-Class [210] 697

SL [129] 731

SLK [170] 735

ME-SB-6742

MERCEDES-BENZ

E-Class [124] 693

ME-SB-6819

MERCEDES-BENZ

V-Class / Vito I [638] 745

Vito II - Viano [639] 747

ME-SB-6820

MERCEDES-BENZ

V-Class / Vito I [638] 745

ME-SB-6825

MERCEDES-BENZ

E-Class [124] 693

ME-SB-6826

MERCEDES-BENZ

C-Class [202] 673

...ME-SB-6826

CLK [208] 687

E-Class [124] 693

SLK [170] 735

ME-SB-7202

MERCEDES-BENZ

C-Class [203] 675

CLC-Class [203] 685

CLK [209] 689

ME-SB-7206

MERCEDES-BENZ

E-Class [210] 697

ME-SB-7765

MERCEDES-BENZ

Sprinter I [901, 902, 903, 904, 905] 739

VW

LT II 28-46 1435

ME-SB-7893

MERCEDES-BENZ

Sprinter II [906] 741

VW

Crafter (04/2006 ->) [2E_ - 2F_] 1405

ME-SB-7894

MERCEDES-BENZ

Sprinter II [906] 741

VW

Crafter (04/2006 ->) [2E_ - 2F_] 1405

ME-SB-7898

MERCEDES-BENZ

Sprinter I [901, 902, 903, 904, 905] 739

VW

LT II 28-46 1435

ME-SB-7901

MERCEDES-BENZ

Sprinter I [901, 902, 903, 904, 905] 739

VW

LT II 28-46 1435

ME-SB-7961

MERCEDES-BENZ

E-Class [210] 697

ME-SB-7965

MERCEDES-BENZ

C-Class [203] 675

E-Class [210] 697

SLK [171] 737

ME-SB-7982

MERCEDES-BENZ

Sprinter I [901, 902, 903, 904, 905] 739

ME-SB-7986

MERCEDES-BENZ

E-Class [210] 697

MOOG

ME-SB-8817
MERCEDES-BENZ
C-Class [204] 677
E-Class [212, 207] 705

ME-SB-8820
MERCEDES-BENZ
C-Class [204] 677
E-Class [212, 207] 705
GLK-Class [204] 715

ME-SB-8821
MERCEDES-BENZ
C-Class [204] 677
E-Class [212, 207] 705
GLK-Class [204] 715

ME-SB-8824
MERCEDES-BENZ
C-Class [204] 677
E-Class [212, 207] 705
GLK-Class [204] 715

ME-SB-8825
MERCEDES-BENZ
C-Class [204] 677
E-Class [212, 207] 705
GLK-Class [204] 715

ME-SB-8827
MERCEDES-BENZ
C-Class [204] 677
E-Class [212, 207] 705
GLK-Class [204] 715

ME-SB-8829
MERCEDES-BENZ
C-Class [204] 677
E-Class [212, 207] 705
GLK-Class [204] 715

ME-SB-8830
MERCEDES-BENZ
C-Class [204] 677
E-Class [212, 207] 705
GLK-Class [204] 715

ME-SB-9916
MERCEDES-BENZ
E-Class [124] 693

ME-SB-9917
MERCEDES-BENZ
E-Class [124] 693
SL [129] 731

ME-SB-9918
MERCEDES-BENZ
SL [129] 731

ME-SB-9920
MERCEDES-BENZ
V-Class / Vito I [638] 745

ME-SB-9921
MERCEDES-BENZ
A-Class [168] 667

ME-SB-9922
MERCEDES-BENZ
CLS [219] 691
E-Class [211] 701

ME-TC-0129
MERCEDES-BENZ
C-Class [202] 673
CLK [208] 687
E-Class [210] 697
SLK [170] 735

ME-TC-0130
MERCEDES-BENZ
C-Class [202] 673
CLK [208] 687
E-Class [210] 697
SLK [170] 735

ME-TC-0728
MERCEDES-BENZ
C-Class [202] 673
C-Class [203] 675
CLK [208] 687
CLK [209] 689
E-Class [124] 693
E-Class [210] 697
SL [129] 731
SLK [170] 735

ME-TC-0731
MERCEDES-BENZ
C-Class [202] 673
C-Class [203] 675
CLK [208] 687
CLK [209] 689
E-Class [124] 693
E-Class [210] 697
SL [129] 731
SLK [170] 735

ME-TC-0732
MERCEDES-BENZ
C-Class [202] 673
C-Class [203] 675
CLK [208] 687
CLK [209] 689
E-Class [124] 693
E-Class [210] 697
SL [129] 731
SLK [170] 735

ME-TC-0987
MERCEDES-BENZ
C-Class [203] 675
CLC-Class [203] 685
CLK [209] 689
SLK [171] 737

ME-TC-0988
MERCEDES-BENZ
C-Class [203] 675
CLC-Class [203] 685
CLK [209] 689

...ME-TC-0988
SLK [171] 737

ME-TC-10643
MERCEDES-BENZ
M-Class [164] 719

ME-TC-10647
MERCEDES-BENZ
M-Class [164] 719
R-Class [251] 723

ME-TC-10751
SMART
Fortwo Coupé - Cabrio [451] 1171

ME-TC-10805
MERCEDES-BENZ
E-Class [212, 207] 705

ME-TC-10806
MERCEDES-BENZ
E-Class [212, 207] 705

ME-TC-13335
MERCEDES-BENZ
A-Class [176] / B-Class [246] 671
CLA [117] 683
GLA-Class [156] 707

ME-TC-13336
MERCEDES-BENZ
A-Class [176] / B-Class [246] 671
CLA [117] 683
GLA-Class [156] 707

ME-TC-13439
MERCEDES-BENZ
S-Class [216, 221] 725

ME-TC-13440
MERCEDES-BENZ
S-Class [216, 221] 725

ME-TC-13725
MERCEDES-BENZ
GLK-Class [204] 715

ME-TC-13726
MERCEDES-BENZ
GLK-Class [204] 715

ME-TC-13773
MERCEDES-BENZ
GLK-Class [204] 715

ME-TC-13797
MERCEDES-BENZ
A-Class [176] / B-Class [246] 671
CLA [117] 683
GLA-Class [156] 707

ME-TC-13803
MERCEDES-BENZ
A-Class [176] / B-Class [246] 671

...ME-TC-13803
CLA [117] 683
GLA-Class [156] 707

ME-TC-13804
MERCEDES-BENZ
A-Class [176] / B-Class [246] 671
CLA [117] 683
GLA-Class [156] 707

ME-TC-13805
MERCEDES-BENZ
A-Class [176] / B-Class [246] 671
CLA [117] 683
GLA-Class [156] 707

ME-TC-13809
MERCEDES-BENZ
S-Class [216, 221] 725

ME-TC-13810
MERCEDES-BENZ
S-Class [216, 221] 725

ME-TC-13979
MERCEDES-BENZ
GL-Class [166] 713
M-Class [166] 721

ME-TC-13980
MERCEDES-BENZ
GL-Class [166] 713
M-Class [166] 721

ME-TC-14535
MERCEDES-BENZ
R-Class [251] 723

ME-TC-14536
MERCEDES-BENZ
R-Class [251] 723

ME-TC-14537
MERCEDES-BENZ
GL-Class [164] 711
GL-Class [166] 713
M-Class [164] 719
R-Class [251] 723

ME-TC-14538
MERCEDES-BENZ
GL-Class [164] 711
M-Class [164] 719
R-Class [251] 723

ME-TC-14939
MERCEDES-BENZ
GL-Class [166] 713
M-Class [166] 721

ME-TC-1959
MERCEDES-BENZ
C-Class [203] 675
C-Class [204] 677
CLC-Class [203] 685

...ME-TC-1959
CLK [209] 689
E-Class [212, 207] 705
SLK [171] 737

ME-TC-1960
MERCEDES-BENZ
C-Class [203] 675
C-Class [204] 677
CLC-Class [203] 685
CLK [209] 689
E-Class [212, 207] 705
SLK [171] 737

ME-TC-1961
MERCEDES-BENZ
CLS [219] 691
E-Class [211] 701

ME-TC-1962
MERCEDES-BENZ
CLS [219] 691
E-Class [211] 701

ME-TC-1968
MERCEDES-BENZ
CLS [219] 691
E-Class [211] 701

ME-TC-1969
MERCEDES-BENZ
CLS [219] 691
E-Class [211] 701

ME-TC-1970
MERCEDES-BENZ
CLS [219] 691
E-Class [211] 701
SL [230] 733

ME-TC-1971
MERCEDES-BENZ
CLS [219] 691
E-Class [211] 701
SL [230] 733

ME-TC-1972
MERCEDES-BENZ
E-Class [211] 701
SL [230] 733

ME-TC-1973
MERCEDES-BENZ
E-Class [211] 701
SL [230] 733

ME-TC-1974
MERCEDES-BENZ
E-Class [211] 701
SL [230] 733

ME-TC-1975
MERCEDES-BENZ
E-Class [211] 701
SL [230] 733

ME-TC-1976
MERCEDES-BENZ
E-Class [211] 701

...ME-TC-1976
SL [230] 733

ME-TC-2719
MERCEDES-BENZ
M-Class [163] 717

ME-TC-2720
MERCEDES-BENZ
M-Class [163] 717

ME-TC-3699
MERCEDES-BENZ
E-Class [211] 701
SL [230] 733

ME-TC-3704
MERCEDES-BENZ
E-Class [211] 701
SL [230] 733

ME-TC-3870
MERCEDES-BENZ
S-Class [220] 729

ME-TC-3871
MERCEDES-BENZ
S-Class [220] 729

ME-TC-3872
MERCEDES-BENZ
S-Class [220] 729

ME-TC-3873
MERCEDES-BENZ
S-Class [220] 729

ME-TC-3874
MERCEDES-BENZ
S-Class [220] 729

ME-TC-3875
MERCEDES-BENZ
S-Class [220] 729

ME-TC-3994
MERCEDES-BENZ
M-Class [163] 717

ME-TC-3995
MERCEDES-BENZ
M-Class [163] 717

ME-TC-4182
MERCEDES-BENZ
S-Class [220] 729

ME-TC-4183
MERCEDES-BENZ
S-Class [220] 729

ME-TC-4184
MERCEDES-BENZ
S-Class [220] 729

ME-TC-4185
MERCEDES-BENZ
S-Class [220] 729

ME-TC-5174
MERCEDES-BENZ
S-Class [216, 221] 725

ME-TC-5175
MERCEDES-BENZ
S-Class [216, 221] 725

ME-TC-5177
MERCEDES-BENZ
S-Class [216, 221] 725

ME-TC-5178
MERCEDES-BENZ
S-Class [216, 221] 725

ME-TC-5180
MERCEDES-BENZ
S-Class [216, 221] 725

ME-TC-5181
MERCEDES-BENZ
S-Class [216, 221] 725

ME-TC-5183
MERCEDES-BENZ
S-Class [216, 221] 725

ME-TC-5184
MERCEDES-BENZ
S-Class [216, 221] 725

ME-TC-5185
MERCEDES-BENZ
S-Class [216, 221] 725

ME-TC-5186
MERCEDES-BENZ
S-Class [216, 221] 725

ME-TC-5187
MERCEDES-BENZ
S-Class [216, 221] 725

ME-TC-5188
MERCEDES-BENZ
S-Class [216, 221] 725

ME-TC-5189
MERCEDES-BENZ
S-Class [216, 221] 725

ME-TC-5190
MERCEDES-BENZ
S-Class [216, 221] 725

ME-TC-5675
MERCEDES-BENZ
C-Class [204] 677

ME-TC-5676
MERCEDES-BENZ
C-Class [204] 677

ME-TC-5774
MERCEDES-BENZ
C-Class [203] 675
CLC-Class [203] 685

ME-TC-7763
MERCEDES-BENZ
M-Class [163] 717

ME-TC-7764
MERCEDES-BENZ
M-Class [163] 717

ME-TC-8796
MERCEDES-BENZ
GL-Class [164] 711
M-Class [164] 719
R-Class [251] 723

ME-TC-8797
MERCEDES-BENZ
GL-Class [164] 711
M-Class [164] 719
R-Class [251] 723

ME-TC-8798
MERCEDES-BENZ
GL-Class [164] 711
M-Class [164] 719

ME-TC-8799
MERCEDES-BENZ
GL-Class [164] 711
M-Class [164] 719

ME-TC-8814
MERCEDES-BENZ
C-Class [204] 677
E-Class [212, 207] 705
GLK-Class [204] 715

ME-TC-8815
MERCEDES-BENZ
C-Class [204] 677
E-Class [212, 207] 705
GLK-Class [204] 715

ME-TC-8816
MERCEDES-BENZ
C-Class [204] 677
E-Class [212, 207] 705
GLK-Class [204] 715

ME-TC-8818
MERCEDES-BENZ
C-Class [204] 677
GLK-Class [204] 715

ME-TC-8819
MERCEDES-BENZ
C-Class [204] 677
GLK-Class [204] 715

ME-TC-8822
MERCEDES-BENZ
C-Class [204] 677
GLK-Class [204] 715

ME-TC-8823
MERCEDES-BENZ
C-Class [204] 677

...ME-TC-8823
GLK-Class [204] 715

ME-WP-0606
MERCEDES-BENZ
C-Class [202] 673
CLK [208] 687
SLK [170] 735

ME-WP-0607
MERCEDES-BENZ
C-Class [202] 673
CLK [208] 687
SLK [170] 735

ME-WP-0684
MERCEDES-BENZ
E-Class [210] 697

ME-WP-0685
MERCEDES-BENZ
E-Class [210] 697

ME-WP-0735
MERCEDES-BENZ
E-Class [124] 693
SL [129] 731

ME-WP-0736
MERCEDES-BENZ
E-Class [124] 693
SL [129] 731

ME-WP-0839
MERCEDES-BENZ
E-Class [124] 693
SL [129] 731

ME-WP-0840
MERCEDES-BENZ
E-Class [124] 693
SL [129] 731

ME-WP-14043
MERCEDES-BENZ
Vito II - Viano [639] 747

ME-WP-14044
MERCEDES-BENZ
Vito II - Viano [639] 747

ME-WP-14045
MERCEDES-BENZ
Vito II - Viano [639] 747

ME-WP-14046
MERCEDES-BENZ
Vito II - Viano [639] 747

ME-WP-1532
MERCEDES-BENZ
A-Class [168] 667

ME-WP-1533
MERCEDES-BENZ
A-Class [168] 667

ME-WP-2076
MERCEDES-BENZ
A-Class [169] / B-Class [245] 669

ME-WP-2077
MERCEDES-BENZ
A-Class [169] / B-Class [245] 669

ME-WP-2250
MERCEDES-BENZ
V-Class / Vito I [638] 745

ME-WP-2251
MERCEDES-BENZ
V-Class / Vito I [638] 745

ME-WP-2332
MERCEDES-BENZ
Sprinter I [901, 902, 903, 904, 905] 739
VW
LT II 28-46 1435

ME-WP-2333
MERCEDES-BENZ
Sprinter I [901, 902, 903, 904, 905] 739
VW
LT II 28-46 1435

ME-WP-2715
MERCEDES-BENZ
M-Class [163] 717

ME-WP-2716
MERCEDES-BENZ
M-Class [163] 717

ME-WP-2717
MERCEDES-BENZ
M-Class [163] 717

ME-WP-2718
MERCEDES-BENZ
M-Class [163] 717

ME-WP-2747
MERCEDES-BENZ
Vaneo [414] 743

ME-WP-2748
MERCEDES-BENZ
Vaneo [414] 743

ME-WP-2855
SMART
City Coupé - Cabrio - Fortwo I [450] 1167

ME-WP-2856
SMART
City Coupé - Cabrio - Fortwo I [450] 1167

ME-WP-4950
MERCEDES-BENZ
Sprinter II [906] 741
VW
Crafter (04/2006 ->) [2E_ - 2F_] 1405

ME-WP-4951
MERCEDES-BENZ
Sprinter II [906] 741

...ME-WP-4951
VW
Crafter (04/2006 ->) [2E_ - 2F_] 1405

ME-WP-5151
MITSUBISHI
Colt VI (06/2004 ->) 771
SMART
Forfour (01/2004 -> 06/2006) [454] 1169

ME-WP-5152
MITSUBISHI
Colt VI (06/2004 ->) 771
SMART
Forfour (01/2004 -> 06/2006) [454] 1169

MI-AX-0620
MITSUBISHI
L300 II (2WD) 783

MI-AX-1299
MITSUBISHI
Galant V & VI (1992 ->) 773

MI-AX-2771
MITSUBISHI
Carisma 767

MI-AX-3325
MITSUBISHI
Colt V (09/1995 ->) 769
Lancer V & VI 787

MI-AX-4438
PROTON
Persona 300 - 400 - Satria - Wira 989

MI-AX-4444
MITSUBISHI
Pajero II (1991 -> 2000) - Sport / Challenger / Classic 793
Pajero III (2000 ->) 795

MI-AX-4854
MITSUBISHI
Pajero Pinin 799

MI-AX-7305
MITSUBISHI
Lancer VII 789

MI-AX-8352
MITSUBISHI
L200 [KB_T, KA_T] 781

MI-AX-8439
MITSUBISHI
Pajero IV (2007 ->) 797

MI-AX-8440
MITSUBISHI
Space Wagon - Space Runner (1999 ->) 803

MI-AX-8441
MITSUBISHI
Space Wagon - Space Runner (1999 ->) 803

MI-BJ-0350
HYUNDAI
H100 477
MITSUBISHI
L300 II (2WD) 783

MI-BJ-10362
MITSUBISHI
L200 (01/1996 -> 12/2007) 779

MI-BJ-10371
HYUNDAI
Accent I (-> 01/2000) [X-3] 453
Accent II (01/2000 ->) [LC] 455
Coupé (-> 2002) 463
Coupé (2002 ->) 465
Elantra 467
Getz 471
Lantra II (11/1995 ->) 489
Matrix 491
Sonata IV 499
KIA
Cerato [LD] 537
Picanto [BA] 545
Venga [YN] 569
MITSUBISHI
Carisma 767
Colt V (09/1995 ->) 769
Lancer V & VI 787
Space Star 801
PROTON
Persona 300 - 400 - Satria - Wira 989
VOLVO
S40 I (-> 12/2003) - V40 1365

MI-BJ-10377
MITSUBISHI
L300 II (4WD) 785

MI-BJ-10384
MITSUBISHI
L200 (01/1986 -> 10/1996) 777
L200 (01/1996 -> 12/2007) 779

MI-BJ-104247
MITSUBISHI
Pajero II (1991 -> 2000) - Sport / Challenger / Classic 793

MI-BJ-104248
MITSUBISHI
Pajero II (1991 -> 2000) - Sport / Challenger / Classic 793

MI-BJ-104249
MITSUBISHI
L200 (01/1996 -> 12/2007) 779
Pajero II (1991 -> 2000) - Sport / Challenger / Classic 793

MI-BJ-4865
MITSUBISHI
L200 (01/1986 -> 10/1996) 777
L200 (01/1996 -> 12/2007) 779

MI-BJ-4914
MITSUBISHI
L300 II (4WD) 785

MI-BJ-4915
MITSUBISHI
L300 II (4WD) 785

MI-BJ-7231
MITSUBISHI
L200 [KB_T, KA_T] 781
Pajero III (2000 ->) 795

MI-BJ-7232
MITSUBISHI
Pajero III (2000 ->) 795

MI-BJ-7233
MITSUBISHI
Pajero III (2000 ->) 795

MI-BJ-7385
MITSUBISHI
Lancer VII 789

MI-BJ-8860
MITSUBISHI
Carisma 767
Space Star 801

MI-ES-0176
MITSUBISHI
L200 (01/1996 -> 12/2007) 779
Pajero II (1991 -> 2000) - Sport / Challenger / Classic 793

MI-ES-0682
MITSUBISHI
Pajero II (1991 -> 2000) - Sport / Challenger / Classic 793

MI-ES-10840
CITROËN
C4 Aircross 187
MITSUBISHI
ASX [GA_W_] 765
Lancer VII 789
PEUGEOT
4008 965

MI-ES-10871
MITSUBISHI
L200 [KB_T, KA_T] 781

MI-ES-10872
MITSUBISHI
L200 [KB_T, KA_T] 781

MI-ES-1629
DAIHATSU
Charade (1987 ->)[G100-200] 281

MI-ES-2194
MITSUBISHI
L200 (01/1986 -> 10/1996) 777

MI-ES-2197
MITSUBISHI
L200 (01/1986 -> 10/1996) 777

MI-ES-2198
MITSUBISHI
L200 (01/1986 -> 10/1996) 777

MI-ES-2245
HYUNDAI
Galloper II 469
MITSUBISHI
Galloper 775
L200 (01/1996 -> 12/2007) 779
L300 II (4WD) 785

MI-ES-2246
HYUNDAI
Galloper II 469
MITSUBISHI
Galloper 775
L200 (01/1996 -> 12/2007) 779
L300 II (4WD) 785

MI-ES-2937
MITSUBISHI
Carisma 767
Colt V (09/1995 ->) 769
Lancer V & VI 787
Space Star 801
PROTON
Persona 300 - 400 - Satria - Wira 989
VOLVO
S40 I (-> 12/2003) - V40 1365

MI-ES-3044
HYUNDAI
H-1 / Starex 473
MITSUBISHI
L300 II (2WD) 783

MI-ES-4885
MITSUBISHI
Pajero II (1991 -> 2000) - Sport / Challenger / Classic 793
Pajero III (2000 ->) 795

MI-ES-4886
MITSUBISHI
Pajero II (1991 -> 2000) - Sport / Challenger / Classic 793
Pajero III (2000 ->) 795

MI-ES-8437
MITSUBISHI
Pajero IV (2007 ->) 797

MI-ES-8438
MITSUBISHI
Pajero IV (2007 ->) 797

MI-ES-8961
MITSUBISHI
L200 (01/1996 -> 12/2007) 779

MI-LS-1615
MITSUBISHI
Galant V & VI (1992 ->) 773

MI-LS-2268
MITSUBISHI
Carisma 767

MI-LS-2451
PROTON
Persona 300 - 400 - Satria - Wira 989

MI-LS-2768
MITSUBISHI
Pajero Pinin 799

MI-LS-2776
FORD
Maverick I 389
NISSAN
Terrano I & II 847

MI-LS-3328
PROTON
Persona 300 - 400 - Satria - Wira 989

MI-LS-4702
MITSUBISHI
Pajero III (2000 ->) 795

MI-LS-4703
MITSUBISHI
Pajero III (2000 ->) 795

MI-LS-5076
MITSUBISHI
Pajero III (2000 ->) 795

MI-LS-5077
MITSUBISHI
Pajero III (2000 ->) 795

MI-LS-7243
MITSUBISHI
Pajero II (1991 -> 2000) - Sport / Challenger / Classic 793

MI-LS-7244
MITSUBISHI
Pajero II (1991 -> 2000) - Sport / Challenger / Classic 793

MI-LS-7309
MITSUBISHI
Lancer VII 789

MI-LS-7383
MITSUBISHI
Lancer VII 789

MI-LS-7403
MITSUBISHI
L300 II (2WD) 783

MI-LS-8427
MITSUBISHI
Pajero II (1991 -> 2000) - Sport / Challenger / Classic 793

MI-LS-8959
MITSUBISHI
L200 [KB_T, KA_T] 781

MI-LS-8960
MITSUBISHI
L200 [KB_T, KA_T] 781

MI-LS-9093
MITSUBISHI
Pajero IV (2007 ->) 797

MI-LS-9094
MITSUBISHI
Pajero IV (2007 ->) 797

MI-PA-0479
MITSUBISHI
Pajero II (1991 -> 2000) - Sport / Challenger / Classic 793

MI-PA-190160
MITSUBISHI
Pajero II (1991 -> 2000) - Sport / Challenger / Classic 793

MI-PA-4402
MITSUBISHI
L200 (01/1986 -> 10/1996) 777
L200 (01/1996 -> 12/2007) 779

MI-SB-10756
MITSUBISHI
Pajero II (1991 -> 2000) - Sport / Challenger / Classic 793

MI-SB-10870
MITSUBISHI
L200 (01/1996 -> 12/2007) 779

MI-SB-10886
MITSUBISHI
Lancer VII 789

MI-SB-10891
MITSUBISHI
Pajero III (2000 ->) 795

MI-SB-10892
MITSUBISHI
Lancer VII 789

MI-SB-10893
MITSUBISHI
Pajero IV (2007 ->) 797

MI-SB-10969
CITROËN
C4 Aircross 187
C-Crosser 207

...MI-SB-10969

MITSUBISHI

ASX [GA_W_] 765

Outlander II 791

PEUGEOT

4007 963

4008 965

MI-SB-12549

MITSUBISHI

Pajero II (1991 -> 2000) - Sport / Challenger / Classic 793

MI-SB-13333

MITSUBISHI

L200 (01/1996 -> 12/2007) 779

Pajero II (1991 -> 2000) - Sport / Challenger / Classic 793

MI-SB-13781

CITROËN

C-Crosser 207

MITSUBISHI

ASX [GA_W_] 765

Lancer VII 789

Outlander II 791

PEUGEOT

4007 963

MI-SB-14099

MITSUBISHI

Lancer VII 789

MI-SB-14632

MITSUBISHI

Carisma 767

Space Star 801

MI-SB-14633

MITSUBISHI

Carisma 767

MI-SB-14735

MITSUBISHI

L200 (01/1996 -> 12/2007) 779

MI-SB-3945

MITSUBISHI

Galant V & VI (1992 ->) 773

MI-SB-6722

MITSUBISHI

Colt V (09/1995 ->) 769

MI-SB-7312

MITSUBISHI

Lancer VII 789

MI-SB-8113

MITSUBISHI

Lancer V & VI 787

MI-SB-8114

MITSUBISHI

Lancer V & VI 787

MI-SB-8434

MITSUBISHI

Pajero III (2000 ->) 795

MI-SB-9592

MITSUBISHI

Galant V & VI (1992 ->) 773

MI-SB-9924

MITSUBISHI

Carisma 767

Colt V (09/1995 ->) 769

Space Star 801

MI-SB-9932

MITSUBISHI

Pajero II (1991 -> 2000) - Sport / Challenger / Classic 793

MI-SB-9934

HYUNDAI

Sonata IV 499

MITSUBISHI

Colt V (09/1995 ->) 769

Outlander II 791

VOLVO

S40 I (-> 12/2003) - V40 1365

MI-SB-9936

HYUNDAI

Sonata IV 499

MITSUBISHI

Galant V & VI (1992 ->) 773

MI-SB-9943

MITSUBISHI

Galant V & VI (1992 ->) 773

MI-TC-10631

MITSUBISHI

Outlander II 791

MI-TC-10857

MITSUBISHI

Carisma 767

Colt V (09/1995 ->) 769

Space Star 801

MI-TC-10858

MITSUBISHI

Carisma 767

Colt V (09/1995 ->) 769

Space Star 801

MI-TC-1628

HYUNDAI

H100 477

MITSUBISHI

L300 II (2WD) 783

MI-TC-1677

HYUNDAI

H100 477

MITSUBISHI

L300 II (2WD) 783

MI-TC-7310

MITSUBISHI

Lancer VII 789

MI-TC-7311

MITSUBISHI

Lancer VII 789

MI-WP-0407

MITSUBISHI

Lancer V & VI 787

PROTON

Persona 300 - 400 - Satria - Wira 989

MI-WP-0408

MITSUBISHI

Lancer V & VI 787

PROTON

Persona 300 - 400 - Satria - Wira 989

MI-WP-10867

MITSUBISHI

L200 (01/1996 -> 12/2007) 779

MI-WP-10868

MITSUBISHI

L200 (01/1996 -> 12/2007) 779

MI-WP-10873

MITSUBISHI

L200 [KB_T, KA_T] 781

MI-WP-10874

MITSUBISHI

L200 [KB_T, KA_T] 781

MI-WP-10875

MITSUBISHI

L200 [KB_T, KA_T] 781

MI-WP-10876

MITSUBISHI

L200 [KB_T, KA_T] 781

MI-WP-1261

MITSUBISHI

Galant V & VI (1992 ->) 773

MI-WP-1269

MITSUBISHI

Galant V & VI (1992 ->) 773

MI-WP-2345

MITSUBISHI

Colt V (09/1995 ->) 769

MI-WP-2346

MITSUBISHI

Colt V (09/1995 ->) 769

MI-WP-2766

MITSUBISHI

Galant V & VI (1992 ->) 773

MI-WP-2767

MITSUBISHI

Galant V & VI (1992 ->) 773

MI-WP-2769

MITSUBISHI

Carisma 767

Colt V (09/1995 ->) 769

Lancer V & VI 787

VOLVO

S40 I (-> 12/2003) - V40 1365

MI-WP-2770

MITSUBISHI

Carisma 767

Colt V (09/1995 ->) 769

Lancer V & VI 787

VOLVO

S40 I (-> 12/2003) - V40 1365

MI-WP-2772

MITSUBISHI

Carisma 767

Space Star 801

MI-WP-2775

MITSUBISHI

Carisma 767

Space Star 801

NI-AX-1268

NISSAN

Almera I (-> 2000) 805

Primera [P11] (06/1996 -> 2002) - Estate [WP11] (04/1998 -> 2002) 839

NI-AX-13359

NISSAN

Micra [K13] (2010 ->) 821

NI-AX-13635

NISSAN

Juke 813

NI-AX-1603

NISSAN

Almera I (-> 2000) 805

Almera II (2000 ->) 807

NI-AX-2219

NISSAN

Primastar 837

OPEL

Vivaro (08/2001 ->) 913

RENAULT

Trafic II 1045

VAUXHALL

Vivaro Mk I 1347

NI-AX-2304

NISSAN

Almera Tino 809

NI-AX-2782

NISSAN

Almera II (2000 ->) 807

NI-AX-2797

NISSAN

Primera [P12] - Estate [WP12] (2002 ->) 841

NI-AX-2809
NISSAN
Maxima QX (10/1994 -> 08/2000) 817

NI-AX-4259
NISSAN
X-Trail I 853

NI-AX-4852
NISSAN
Murano 823

NI-AX-4923
NISSAN
Navara 825
Pathfinder III (2005 ->) 831

NI-AX-7248
NISSAN
Vanette [C23] (1995 ->) 851

NI-AX-7337
NISSAN
Qashqai 843
X-Trail II 855
RENAULT
Koleos 1019

NI-AX-8456
NISSAN
Note 827
Tiida 849

NI-AX-9063
NISSAN
Pixo 835
SUZUKI
Alto V [GF] 1193

NI-BJ-0311
NISSAN
Almera I (-> 2000) 805

NI-BJ-10389
FORD
Maverick I 389
NISSAN
Terrano I & II 847

NI-BJ-104145
NISSAN
Primera [P11] (06/1996 -> 2002) - Estate [WP11] (04/1998 -> 2002) 839

NI-BJ-10418
NISSAN
Maxima QX (10/1994 -> 08/2000) 817

NI-BJ-10423
FORD
Maverick I 389

NI-BJ-10627
NISSAN
Juke 813

...NI-BJ-10627
Tiida 849

NI-BJ-10804
NISSAN
Pick Up [D22] (02/1998 ->) 833

NI-BJ-10930
FORD
Maverick I 389
NISSAN
Terrano I & II 847

NI-BJ-12582
NISSAN
Pixo 835
SUZUKI
Alto V [GF] 1193

NI-BJ-13545
NISSAN
Micra [K13] (2010 ->) 821

NI-BJ-2309
NISSAN
Almera Tino 809

NI-BJ-2783
NISSAN
Almera II (2000 ->) 807

NI-BJ-2792
NISSAN
Micra [K12] (2003 ->) 819
Note 827

NI-BJ-4841
NISSAN
Primera [P12] - Estate [WP12] (2002 ->) 841

NI-BJ-4926
NISSAN
Navara 825
Pathfinder III (2005 ->) 831

NI-BJ-4927
NISSAN
Navara 825
Pathfinder III (2005 ->) 831

NI-BJ-4954
NISSAN
Murano 823
Qashqai 843
X-Trail II 855
RENAULT
Kadjar [HA_, HL_] 1013
Koleos 1019

NI-BJ-5199
NISSAN
Vanette [C23] (1995 ->) 851

NI-BJ-5200
NISSAN
Vanette [C23] (1995 ->) 851

NI-DL-4948
NISSAN
Pick Up [D22] (02/1998 ->) 833

NI-DS-2386
FORD
Maverick I 389
NISSAN
Terrano I & II 847

NI-ES-0310
NISSAN
Almera I (-> 2000) 805

NI-ES-10625
NISSAN
Juke 813

NI-ES-10626
NISSAN
Juke 813

NI-ES-10902
NISSAN
Pick Up [D22] (02/1998 ->) 833

NI-ES-10903
NISSAN
Pick Up [D22] (02/1998 ->) 833

NI-ES-10904
NISSAN
Pick Up [D22] (02/1998 ->) 833

NI-ES-1254
NISSAN
Primera [P11] (06/1996 -> 2002) - Estate [WP11] (04/1998 -> 2002) 839
Primera [P12] - Estate [WP12] (2002 ->) 841
Vanette [C23] (1995 ->) 851

NI-ES-12593
NISSAN
Micra [K13] (2010 ->) 821

NI-ES-12594
NISSAN
Micra [K13] (2010 ->) 821

NI-ES-14847
NISSAN
Qashqai II [J11_] 845

NI-ES-14848
NISSAN
Qashqai II [J11_] 845

NI-ES-2777
NISSAN
Almera II (2000 ->) 807

NI-ES-2780
NISSAN
Almera I (-> 2000) 805
Almera II (2000 ->) 807
Almera Tino 809

...NI-ES-2780
Maxima QX (10/1994 -> 08/2000) 817

NI-ES-2790
NISSAN
Micra [K12] (2003 ->) 819

NI-ES-2791
NISSAN
Micra [K12] (2003 ->) 819

NI-ES-2801
NISSAN
X-Trail I 853

NI-ES-3002
FORD
Maverick I 389
NISSAN
Terrano I & II 847

NI-ES-3051
FORD
Maverick I 389
NISSAN
Terrano I & II 847

NI-ES-4924
NISSAN
Navara 825
Pathfinder III (2005 ->) 831

NI-ES-4925
NISSAN
Navara 825
Pathfinder III (2005 ->) 831

NI-ES-4957
NISSAN
Murano 823

NI-ES-5642
NISSAN
Micra [K12] (2003 ->) 819
Note 827
Tiida 849

NI-ES-5643
NISSAN
Micra [K12] (2003 ->) 819
Note 827
Tiida 849

NI-ES-7225
NISSAN
Qashqai 843
X-Trail II 855
RENAULT
Koleos 1019

NI-ES-7226
NISSAN
Qashqai 843
X-Trail II 855
RENAULT
Koleos 1019

NI-LS-10160
NISSAN
Primera [P12] - Estate [WP12] (2002 ->) 841

NI-LS-10692
NISSAN
Juke 813
RENAULT
Kadjar [HA_, HL_] 1013

NI-LS-1168
NISSAN
Almera I (-> 2000) 805
SUZUKI
Baleno [EG] 1195
Liana 1209

NI-LS-1169
NISSAN
Primera [P11] (06/1996 -> 2002) - Estate [WP11] (04/1998 -> 2002) 839

NI-LS-12697
NISSAN
Micra [K13] (2010 ->) 821
Note 827

NI-LS-1674
NISSAN
Maxima QX (10/1994 -> 08/2000) 817

NI-LS-2307
NISSAN
Almera Tino 809

NI-LS-2308
NISSAN
Almera Tino 809

NI-LS-2778
NISSAN
Almera II (2000 ->) 807

NI-LS-2779
NISSAN
Primera [P12] - Estate [WP12] (2002 ->) 841

NI-LS-2798
NISSAN
Primera [P12] - Estate [WP12] (2002 ->) 841

NI-LS-2804
NISSAN
X-Trail I 853

NI-LS-2805
NISSAN
X-Trail I 853

NI-LS-4067
NISSAN
X-Trail I 853

NI-LS-4887
NISSAN
Navara 825

...NI-LS-4887
Pathfinder III (2005 ->) 831

NI-LS-4888
NISSAN
Navara 825
Pathfinder III (2005 ->) 831

NI-LS-5735
NISSAN
Primera [P12] - Estate [WP12] (2002 ->) 841

NI-LS-7227
NISSAN
Qashqai 843
X-Trail II 855
RENAULT
Koleos 1019

NI-LS-7228
NISSAN
Qashqai 843
X-Trail II 855
RENAULT
Koleos 1019

NI-LS-7246
NISSAN
Vanette [C23] (1995 ->) 851

NI-LS-7247
NISSAN
Vanette [C23] (1995 ->) 851

NI-LS-7766
NISSAN
Qashqai 843
X-Trail II 855

NI-LS-7767
NISSAN
Qashqai 843
X-Trail II 855

NI-LS-8421
NISSAN
Navara 825
Pathfinder III (2005 ->) 831

NI-LS-8422
NISSAN
Navara 825
Pathfinder III (2005 ->) 831

NI-LS-8457
NISSAN
Note 827
Tiida 849

NI-LS-9056
NISSAN
Pixo 835
SUZUKI
Alto V [GF] 1193

NI-SB-10078
NISSAN
Qashqai 843

...NI-SB-10078
X-Trail II 855

NI-SB-10079
NISSAN
Qashqai 843
X-Trail II 855

NI-SB-10628
NISSAN
Juke 813

NI-SB-10702
NISSAN
Juke 813
Qashqai 843

NI-SB-10707
NISSAN
Pixo 835
SUZUKI
Alto V [GF] 1193

NI-SB-10708
NISSAN
Pixo 835
SUZUKI
Alto V [GF] 1193

NI-SB-10841
NISSAN
Note 827

NI-SB-10897
NISSAN
Almera II (2000 ->) 807

NI-SB-12581
NISSAN
Pixo 835
SUZUKI
Alto V [GF] 1193

NI-SB-12591
NISSAN
X-Trail I 853

NI-SB-12592
NISSAN
X-Trail I 853

NI-SB-13622
NISSAN
Micra [K13] (2010 ->) 821

NI-SB-13699
NISSAN
Juke 813
Qashqai 843

NI-SB-1372
NISSAN
Primera [P11] (06/1996 -> 2002) - Estate [WP11] (04/1998 -> 2002) 839

NI-SB-14049
NISSAN
Micra [K12] (2003 ->) 819

...NI-SB-14049
RENAULT
Clio III 1001

NI-SB-14559
NISSAN
Micra [K13] (2010 ->) 821

NI-SB-14560
NISSAN
Micra [K13] (2010 ->) 821

NI-SB-14591
NISSAN
Qashqai 843
Qashqai II [J11_] 845
RENAULT
Kadjar [HA_, HL_] 1013

NI-SB-14767
NISSAN
X-Trail II 855
RENAULT
Koleos 1019

NI-SB-15132
NISSAN
Qashqai 843
Qashqai II [J11_] 845
X-Trail II 855
RENAULT
Kadjar [HA_, HL_] 1013

NI-SB-1826
NISSAN
Almera I (-> 2000) 805

NI-SB-1948
NISSAN
Primera [P11] (06/1996 -> 2002) - Estate [WP11] (04/1998 -> 2002) 839

NI-SB-1950
NISSAN
Primera [P11] (06/1996 -> 2002) - Estate [WP11] (04/1998 -> 2002) 839

NI-SB-2784
NISSAN
Almera II (2000 ->) 807

NI-SB-2786
NISSAN
Almera II (2000 ->) 807

NI-SB-2793
NISSAN
Micra [K12] (2003 ->) 819
Note 827
RENAULT
Clio III 1001
Modus 1041

NI-SB-2794
NISSAN
Micra [K12] (2003 ->) 819

...NI-SB-2794
Note 827
RENAULT
Clio III 1001
Modus 1041

NI-SB-2799
NISSAN
Primera [P12] - Estate [WP12] (2002 ->) 841

NI-SB-2800
NISSAN
Primera [P12] - Estate [WP12] (2002 ->) 841

NI-SB-2807
NISSAN
X-Trail I 853

NI-SB-2808
NISSAN
X-Trail I 853

NI-SB-3212
FORD
Maverick I 389
NISSAN
Terrano I & II 847

NI-SB-4692
NISSAN
Primera [P11] (06/1996 -> 2002) - Estate [WP11] (04/1998 -> 2002) 839

NI-SB-4693
NISSAN
Primera [P11] (06/1996 -> 2002) - Estate [WP11] (04/1998 -> 2002) 839

NI-SB-6791
NISSAN
Primera [P11] (06/1996 -> 2002) - Estate [WP11] (04/1998 -> 2002) 839

NI-SB-8454
NISSAN
Navara 825
Pathfinder III (2005 ->) 831

NI-SB-8455
NISSAN
Navara 825
Pathfinder III (2005 ->) 831

NI-SB-8909
NISSAN
Qashqai 843
X-Trail II 855
RENAULT
Koleos 1019

NI-SB-8910
NISSAN
Juke 813

...NI-SB-8910
Qashqai 843
X-Trail II 855
RENAULT
Koleos 1019

NI-SB-9945
NISSAN
Almera II (2000 ->) 807

NI-SB-9947
NISSAN
Almera I (-> 2000) 805
Maxima QX (10/1994 -> 08/2000) 817
Primera [P11] (06/1996 -> 2002) - Estate [WP11] (04/1998 -> 2002) 839

NI-SB-9948
NISSAN
Almera I (-> 2000) 805

NI-SB-9949
NISSAN
Maxima QX (10/1994 -> 08/2000) 817

NI-SB-9957
NISSAN
Almera Tino 809
Murano 823
Primera [P12] - Estate [WP12] (2002 ->) 841

NI-SB-9966
NISSAN
Primastar 837
OPEL
Vivaro (08/2001 ->) 913
RENAULT
Trafic II 1045
VAUXHALL
Vivaro Mk I 1347

NI-TC-0566
NISSAN
Primera [P11] (06/1996 -> 2002) - Estate [WP11] (04/1998 -> 2002) 839

NI-TC-0567
NISSAN
Primera [P11] (06/1996 -> 2002) - Estate [WP11] (04/1998 -> 2002) 839

NI-TC-10909
NISSAN
Pick Up [D22] (02/1998 ->) 833

NI-TC-10910
NISSAN
Pick Up [D22] (02/1998 ->) 833

NI-TC-14993
NISSAN
X-Trail I 853

NI-TC-14994
NISSAN
X-Trail I 853

NI-TC-15133
NISSAN
Qashqai 843
Qashqai II [J11_] 845
X-Trail II 855
RENAULT
Kadjar [HA_, HL_] 1013

NI-TC-15134
NISSAN
Qashqai 843
Qashqai II [J11_] 845
X-Trail II 855
RENAULT
Kadjar [HA_, HL_] 1013

NI-TC-5205
NISSAN
Primera [P12] - Estate [WP12] (2002 ->) 841

NI-TC-5206
NISSAN
Primera [P12] - Estate [WP12] (2002 ->) 841

NI-WP-0989
NISSAN
Primera [P11] (06/1996 -> 2002) - Estate [WP11] (04/1998 -> 2002) 839

NI-WP-0990
NISSAN
Primera [P11] (06/1996 -> 2002) - Estate [WP11] (04/1998 -> 2002) 839

NI-WP-10629
NISSAN
Juke 813

NI-WP-10630
NISSAN
Juke 813

NI-WP-13313
NISSAN
Tiida 849

NI-WP-13314
NISSAN
Tiida 849

NI-WP-13361
NISSAN
Micra [K13] (2010 ->) 821

NI-WP-13362
NISSAN
Micra [K13] (2010 ->) 821

NI-WP-15273
NISSAN
Qashqai II [J11_] 845

...NI-WP-15273
RENAULT
Kadjar [HA_, HL_] 1013

NI-WP-15274
NISSAN
Qashqai II [J11_] 845
RENAULT
Kadjar [HA_, HL_] 1013

NI-WP-2224
NISSAN
Primastar 837
OPEL
Vivaro (08/2001 ->) 913
RENAULT
Trafic II 1045
VAUXHALL
Vivaro Mk I 1347

NI-WP-2226
NISSAN
Primastar 837
OPEL
Vivaro (08/2001 ->) 913
RENAULT
Trafic II 1045
VAUXHALL
Vivaro Mk I 1347

NI-WP-2244
NISSAN
Almera I (-> 2000) 805

NI-WP-2245
NISSAN
Almera I (-> 2000) 805

NI-WP-2305
NISSAN
Almera Tino 809

NI-WP-2306
NISSAN
Almera Tino 809

NI-WP-2781
NISSAN
Almera II (2000 ->) 807

NI-WP-2788
NISSAN
Micra [K12] (2003 ->) 819
Note 827

NI-WP-2789
NISSAN
Micra [K12] (2003 ->) 819
Note 827

NI-WP-2795
NISSAN
Primera [P12] - Estate [WP12] (2002 ->) 841

NI-WP-2796
NISSAN
Primera [P12] - Estate [WP12] (2002 ->) 841

NI-WP-2802
NISSAN
X-Trail I 853

NI-WP-2803
NISSAN
X-Trail I 853

NI-WP-3229
NISSAN
Almera II (2000 ->) 807

NI-WP-7229
NISSAN
Qashqai 843
X-Trail II 855
RENAULT
Koleos 1019

NI-WP-7230
NISSAN
Qashqai 843
X-Trail II 855
RENAULT
Koleos 1019

NI-WP-7249
NISSAN
Vanette [C23] (1995 ->) 851

NI-WP-7250
NISSAN
Vanette [C23] (1995 ->) 851

NI-WP-8450
NISSAN
Navara 825
Pathfinder III (2005 ->) 831

NI-WP-8451
NISSAN
Navara 825
Pathfinder III (2005 ->) 831

NI-WP-8452
NISSAN
Navara 825
Pathfinder III (2005 ->) 831

NI-WP-8453
NISSAN
Navara 825
Pathfinder III (2005 ->) 831

NI-WP-9095
NISSAN
Pixo 835
SUZUKI
Alto V [GF] 1193

NI-WP-9096
NISSAN
Pixo 835
SUZUKI
Alto V [GF] 1193

OP-AX-0432
OPEL
Combo II (10/2001 ->) 879

...OP-AX-0432
Corsa C 883
VAUXHALL
Combo Mk II (09/2001 ->) 1313
Corsa Mk II 1317

OP-AX-0611
OPEL
Astra F 867
SAAB
900 II (1993 ->) 1079
9-3 I [YS3D] 1073
VAUXHALL
Astra Mk III 1301

OP-AX-0659
DAEWOO
Lanos - Nexia - Espero 267

OP-AX-10118
NISSAN
NV400 829
OPEL
Movano B 899
RENAULT
Master III 1031
VAUXHALL
Movano Mk II 1333

OP-AX-10486
CHEVROLET
Cruze [J300, J305, J308] 149
OPEL
Astra J 873
VAUXHALL
Astra MK VI 1307

OP-AX-1230
OPEL
Astra G 869
Zafira A (-> 2005) 915
VAUXHALL
Astra Mk IV 1303
Zafira Mk I 1349

OP-AX-13415
OPEL
Adam 857
VAUXHALL
Adam 857

OP-AX-13418
OPEL
Mokka 895
VAUXHALL
Mokka 895

OP-AX-13452
CHEVROLET
Orlando 161
OPEL
Zafira C (10/2011 ->) [P12] 919
VAUXHALL
Zafira Mk III 1353

OP-AX-13623
OPEL
Astra J 873
VAUXHALL
Astra MK VI 1307

OP-AX-13624
OPEL
Astra J 873
VAUXHALL
Astra MK VI 1307

OP-AX-14766
OPEL
Insignia I (07/2008 ->) 889
VAUXHALL
Insignia Mk I 1323

OP-AX-1893
OPEL
Meriva A 891
VAUXHALL
Meriva Mk I 1325

OP-AX-1894
OPEL
Meriva A 891
VAUXHALL
Meriva Mk I 1325

OP-AX-2083
FIAT
Croma II (2005 ->) 303
OPEL
Vectra C (2002 ->) 911
VAUXHALL
Vectra Mk II 1345

OP-AX-2194
OPEL
Agila I 859
SUBARU
Justy III 1183
SUZUKI
Ignis II 1205
VAUXHALL
Agila I 859

OP-AX-2816
OPEL
Astra H 871
VAUXHALL
Astra Mk V 1305

OP-AX-2817
OPEL
Astra H 871
Zafira B (2005 ->) 917
VAUXHALL
Astra Mk V 1305
Zafira Mk II 1351

OP-AX-3537
OPEL
Frontera B - Monterey B (1998 ->) 887

...OP-AX-3537
VAUXHALL
Frontera Mk II - Monterey Mk II 1321

OP-AX-3814
OPEL
Signum 903
Vectra C (2002 ->) 911
VAUXHALL
Signum 903
Vectra Mk II 1345

OP-AX-4160
ALFA ROMEO
Mito 19
FIAT
Punto III (10/2005 ->) 335
OPEL
Corsa D 885
VAUXHALL
Corsa Mk III 1319

OP-AX-4162
OPEL
Zafira B (2005 ->) 917
VAUXHALL
Zafira Mk II 1351

OP-AX-5162
OPEL
Astra H 871
Zafira B (2005 ->) 917
VAUXHALL
Astra Mk V 1305
Zafira Mk II 1351

OP-AX-5163
OPEL
Astra H 871
Zafira B (2005 ->) 917
VAUXHALL
Astra Mk V 1305
Zafira Mk II 1351

OP-AX-5576
OPEL
Combo I (-> 10/2001) 877
Corsa B 881
Tigra (-> 2000) 905
VAUXHALL
Combo Mk I (-> 09/2001) 1311
Corsa Mk I 1315
Tigra Mk I 1339

OP-AX-5577
OPEL
Combo I (-> 10/2001) 877
Corsa B 881
Tigra (-> 2000) 905
VAUXHALL
Combo Mk I (-> 09/2001) 1311
Corsa Mk I 1315
Tigra Mk I 1339

OP-AX-5581

OPEL
Vectra B (1995 -> 2002) 909
SAAB
9-5 1077
VAUXHALL
Vectra Mk I 1343

OP-AX-5689

OPEL
Signum 903
Vectra C (2002 ->) 911
SAAB
9-3 II [YS3F] 1075
VAUXHALL
Signum 903
Vectra Mk II 1345

OP-AX-5691

OPEL
Combo II (10/2001 ->) 879
Corsa C 883
VAUXHALL
Combo Mk II (09/2001 ->) 1313
Corsa Mk II 1317

OP-AX-7221

CHEVROLET
Captiva [C100, C140] 147
OPEL
Antara 863
VAUXHALL
Antara 863

OP-AX-7452

OPEL
Tigra TwinTop (2004 ->) 907
VAUXHALL
Tigra TwinTop 1341

OP-AX-7768

OPEL
Insignia I (07/2008 ->) 889
VAUXHALL
Insignia Mk I 1323

OP-AX-8746

OPEL
Meriva B 893
VAUXHALL
Meriva Mk II 1327

OP-AX-8747

OPEL
Meriva B 893
VAUXHALL
Meriva Mk II 1327

OP-AX-8848

OPEL
Astra J 873
VAUXHALL
Astra MK VI 1307

OP-BJ-0177

ISUZU
Trooper III (04/2000 ->) 509

OP-BJ-0312

OPEL
Combo I (-> 10/2001) 877
Corsa B 881
Tigra (-> 2000) 905
VAUXHALL
Combo Mk I (-> 09/2001) 1311
Corsa Mk I 1315
Tigra Mk I 1339

OP-BJ-0812

OPEL
Combo II (10/2001 ->) 879
Corsa C 883
Tigra TwinTop (2004 ->) 907
VAUXHALL
Combo Mk II (09/2001 ->) 1313
Corsa Mk II 1317
Tigra TwinTop 1341

OP-BJ-12502

NISSAN
NV400 829
OPEL
Movano B 899
RENAULT
Master III 1031
VAUXHALL
Movano Mk II 1333

OP-BJ-1504

ISUZU
Trooper III (04/2000 ->) 509
OPEL
Frontera B - Monterey B (1998 ->) 887
VAUXHALL
Frontera Mk II - Monterey Mk II 1321

OP-BJ-1895

OPEL
Meriva A 891
VAUXHALL
Meriva Mk I 1325

OP-BJ-1899

OPEL
Meriva A 891
VAUXHALL
Meriva Mk I 1325

OP-BJ-2040

OPEL
Frontera B - Monterey B (1998 ->) 887
VAUXHALL
Frontera Mk II - Monterey Mk II 1321

OP-BJ-4745

CHEVROLET
Captiva [C100, C140] 147
OPEL
Antara 863

...OP-BJ-4745

VAUXHALL
Antara 863

OP-BJ-4870

ALFA ROMEO
Mito 19
CITROËN
Nemo 227
FIAT
Fiorino (2008 ->) 315
Linea 319
Punto III (10/2005 ->) 335
Qubo 337
OPEL
Adam 857
Corsa D 885
PEUGEOT
Bipper 969
VAUXHALL
Adam 857
Corsa Mk III 1319

OP-BJ-5375

DAEWOO
Lanos - Nexia - Espero 267

OP-BJ-5393

OPEL
Combo I (-> 10/2001) 877
Corsa B 881
Tigra (-> 2000) 905
VAUXHALL
Combo Mk I (-> 09/2001) 1311
Corsa Mk I 1315
Tigra Mk I 1339

OP-BJ-5567

OPEL
Astra F 867
VAUXHALL
Astra Mk III 1301

OP-BJ-5583

OPEL
Astra G 869
Astra H 871
Meriva B 893
Omega B 901
Vectra B (1995 -> 2002) 909
Zafira A (-> 2005) 915
Zafira B (2005 ->) 917
SAAB
9-5 1077
VAUXHALL
Astra Mk IV 1303
Astra Mk V 1305
Meriva Mk II 1327
Omega 1335
Vectra Mk I 1343
Zafira Mk I 1349
Zafira Mk II 1351

OP-BJ-8965

NISSAN
NV400 829

...OP-BJ-8965

OPEL
Movano B 899
RENAULT
Master III 1031
VAUXHALL
Movano Mk II 1333

OP-DS-0750

DAEWOO
Nubira I 273

OP-DS-3812

DAEWOO
Lanos - Nexia - Espero 267

OP-DS-5376

DAEWOO
Lanos - Nexia - Espero 267

OP-DS-5574

OPEL
Astra F 867
SAAB
900 II (1993 ->) 1079
9-3 I [YS3D] 1073
VAUXHALL
Astra Mk III 1301

OP-DS-5584

OPEL
Omega B 901
VAUXHALL
Omega 1335

OP-DS-5586

OPEL
Omega B 901
VAUXHALL
Omega 1335

OP-DS-5587

OPEL
Omega B 901
VAUXHALL
Omega 1335

OP-ES-0480

OPEL
Combo I (-> 10/2001) 877
Corsa B 881
Tigra (-> 2000) 905
VAUXHALL
Combo Mk I (-> 09/2001) 1311
Corsa Mk I 1315
Tigra Mk I 1339

OP-ES-0514

OPEL
Astra G 869
Zafira A (-> 2005) 915
VAUXHALL
Astra Mk IV 1303
Zafira Mk I 1349

OP-ES-10119

NISSAN
NV400 829

...OP-ES-10119

OPEL
Movano B 899
RENAULT
Master III 1031
VAUXHALL
Movano Mk II 1333

OP-ES-10120

NISSAN
NV400 829
OPEL
Movano B 899
RENAULT
Master III 1031
VAUXHALL
Movano Mk II 1333

OP-ES-13627

OPEL
Astra J 873
VAUXHALL
Astra MK VI 1307

OP-ES-13628

OPEL
Astra J 873
VAUXHALL
Astra MK VI 1307

OP-ES-13924

OPEL
Mokka 895
VAUXHALL
Mokka 895

OP-ES-1501

ISUZU
Trooper III (04/2000 ->) 509

OP-ES-1502

ISUZU
Trooper III (04/2000 ->) 509

OP-ES-15335

OPEL
Astra K 875
VAUXHALL
Astra Mk VII 1309

OP-ES-15336

OPEL
Astra K 875
VAUXHALL
Astra Mk VII 1309

OP-ES-1892

OPEL
Meriva A 891
VAUXHALL
Meriva Mk I 1325

OP-ES-2081

FIAT
Croma II (2005 ->) 303

...OP-ES-2081

OPEL
Signum 903
Vectra C (2002 ->) 911
SAAB
9-3 II [YS3F] 1075
9-5 1077
VAUXHALL
Signum 903
Vectra Mk II 1345

OP-ES-2082

FIAT
Croma II (2005 ->) 303
OPEL
Signum 903
Vectra C (2002 ->) 911
SAAB
9-3 II [YS3F] 1075
9-5 1077
VAUXHALL
Signum 903
Vectra Mk II 1345

OP-ES-2814

OPEL
Frontera B - Monterey B (1998 ->) 887
VAUXHALL
Frontera Mk II - Monterey Mk II 1321

OP-ES-2818

OPEL
Astra H 871
Meriva B 893
Zafira B (2005 ->) 917
VAUXHALL
Astra Mk V 1305
Meriva Mk II 1327
Zafira Mk II 1351

OP-ES-2819

OPEL
Astra H 871
Meriva B 893
Zafira B (2005 ->) 917
VAUXHALL
Astra Mk V 1305
Meriva Mk II 1327
Zafira Mk II 1351

OP-ES-3620

OPEL
Agila I 859
SUBARU
Justy III 1183
SUZUKI
Ignis I 1203
VAUXHALL
Agila I 859

OP-ES-4746

CHEVROLET
Captiva [C100, C140] 147

...OP-ES-4746

OPEL
Antara 863
VAUXHALL
Antara 863

OP-ES-4921

ALFA ROMEO
Mito 19
FIAT
Punto III (10/2005 ->) 335
OPEL
Adam 857
Corsa D 885
VAUXHALL
Adam 857
Corsa Mk III 1319

OP-ES-4922

ALFA ROMEO
Mito 19
FIAT
Punto III (10/2005 ->) 335
OPEL
Adam 857
Corsa D 885
VAUXHALL
Adam 857
Corsa Mk III 1319

OP-ES-5377

DAEWOO
Lanos - Nexia - Espero 267

OP-ES-5380

DAEWOO
Lanos - Nexia - Espero 267

OP-ES-5555

OPEL
Omega B 901
VAUXHALL
Omega 1335

OP-ES-5557

OPEL
Omega B 901
VAUXHALL
Omega 1335

OP-ES-5562

OPEL
Astra F 867
SAAB
900 II (1993 ->) 1079
9-3 I [YS3D] 1073
VAUXHALL
Astra Mk III 1301

OP-ES-5565

OPEL
Astra F 867
SAAB
900 II (1993 ->) 1079

...OP-ES-5565

9-3 I [YS3D] 1073
VAUXHALL
Astra Mk III 1301

OP-ES-5569

OPEL
Combo I (-> 10/2001) 877
Combo II (10/2001 ->) 879
Corsa B 881
Corsa C 883
Tigra (-> 2000) 905
Tigra TwinTop (2004 ->) 907
SMART
Fortwo Coupé - Cabrio [451] 1171
VAUXHALL
Combo Mk I (-> 09/2001) 1311
Combo Mk II (09/2001 ->) 1313
Corsa Mk I 1315
Corsa Mk II 1317
Tigra Mk I 1339
Tigra TwinTop 1341

OP-ES-5579

OPEL
Vectra B (1995 -> 2002) 909
SAAB
9-5 1077
VAUXHALL
Vectra Mk I 1343

OP-ES-5588

OPEL
Omega B 901
VAUXHALL
Omega 1335

OP-ES-5589

OPEL
Omega B 901
VAUXHALL
Omega 1335

OP-ES-7415

CHEVROLET
Cruze [J300, J305, J308] 149
Orlando 161
OPEL
Astra J 873
Insignia I (07/2008 ->) 889
VAUXHALL
Astra MK VI 1307
Insignia Mk I 1323

OP-LS-0515

OPEL
Astra G 869
Astra H 871
Zafira A (-> 2005) 915
Zafira B (2005 ->) 917
VAUXHALL
Astra Mk IV 1303
Astra Mk V 1305
Zafira Mk I 1349

...OP-LS-0515

Zafira Mk II 1351

OP-LS-0993

OPEL
Astra F 867
VAUXHALL
Astra Mk III 1301

OP-LS-10475

NISSAN
NV400 829
OPEL
Movano B 899
RENAULT
Master III 1031
VAUXHALL
Movano Mk II 1333

OP-LS-10476

NISSAN
NV400 829
OPEL
Movano B 899
RENAULT
Master III 1031
VAUXHALL
Movano Mk II 1333

OP-LS-12602

NISSAN
NV400 829
OPEL
Movano B 899
RENAULT
Master III 1031
VAUXHALL
Movano Mk II 1333

OP-LS-13414

OPEL
Adam 857
VAUXHALL
Adam 857

OP-LS-13625

OPEL
Astra J 873
VAUXHALL
Astra MK VI 1307

OP-LS-13626

OPEL
Astra J 873
VAUXHALL
Astra MK VI 1307

OP-LS-13685

OPEL
Mokka 895
VAUXHALL
Mokka 895

OP-LS-13686

OPEL
Mokka 895

...OP-LS-13686

VAUXHALL
Mokka 895

OP-LS-15333

OPEL
Astra K 875
VAUXHALL
Astra Mk VII 1309

OP-LS-15334

OPEL
Astra K 875
VAUXHALL
Astra Mk VII 1309

OP-LS-15394

OPEL
Astra G 869
Astra H 871
Meriva B 893
Zafira A (-> 2005) 915
Zafira B (2005 ->) 917
VAUXHALL
Astra Mk IV 1303
Astra Mk V 1305
Meriva Mk II 1327
Zafira Mk I 1349
Zafira Mk II 1351

OP-LS-1786

OPEL
Frontera B - Monterey B (1998 ->) 887
VAUXHALL
Frontera Mk II - Monterey Mk II 1321

OP-LS-1994

OPEL
Astra F 867
VAUXHALL
Astra Mk III 1301

OP-LS-2018

DAEWOO
Lanos - Nexia - Espero 267

OP-LS-2080

FIAT
Croma II (2005 ->) 303
OPEL
Signum 903
Vectra C (2002 ->) 911
SAAB
9-3 II [YS3F] 1075
VAUXHALL
Signum 903
Vectra Mk II 1345

OP-LS-2328

OPEL
Omega B 901
VAUXHALL
Omega 1335

OP-LS-2329

OPEL
Omega B 901
VAUXHALL
Omega 1335

OP-LS-2811

OPEL
Frontera B - Monterey B (1998 ->) 887
VAUXHALL
Frontera Mk II - Monterey Mk II 1321

OP-LS-2821

OPEL
Astra H 871
Zafira B (2005 ->) 917
VAUXHALL
Astra Mk V 1305
Zafira Mk II 1351

OP-LS-3815

FIAT
Croma II (2005 ->) 303
OPEL
Signum 903
Vectra C (2002 ->) 911
SAAB
9-3 II [YS3F] 1075
VAUXHALL
Signum 903
Vectra Mk II 1345

OP-LS-4706

CHEVROLET
Captiva [C100, C140] 147
OPEL
Antara 863
VAUXHALL
Antara 863

OP-LS-4707

CHEVROLET
Captiva [C100, C140] 147
OPEL
Antara 863
VAUXHALL
Antara 863

OP-LS-5575

OPEL
Omega B 901
VAUXHALL
Omega 1335

OP-LS-5582

OPEL
Combo II (10/2001 ->) 879
Corsa C 883
Meriva A 891
Tigra TwinTop (2004 ->) 907
Vectra B (1995 -> 2002) 909
SAAB
9-5 1077

...OP-LS-5582

VAUXHALL
Combo Mk II (09/2001 ->) 1313
Corsa Mk II 1317
Meriva Mk I 1325
Tigra TwinTop 1341
Vectra Mk I 1343

OP-LS-5739

OPEL
Signum 903
Vectra C (2002 ->) 911
VAUXHALL
Signum 903
Vectra Mk II 1345

OP-LS-6993

OPEL
Vectra B (1995 -> 2002) 909
VAUXHALL
Vectra Mk I 1343

OP-LS-7224

CHEVROLET
Captiva [C100, C140] 147
OPEL
Antara 863
VAUXHALL
Antara 863

OP-LS-7446

CHEVROLET
Cruze [J300, J305, J308] 149
OPEL
Astra J 873
Insignia I (07/2008 ->) 889
VAUXHALL
Astra MK VI 1307
Insignia Mk I 1323

OP-LS-8349

CHEVROLET
Cruze [J300, J305, J308] 149
Orlando 161
OPEL
Astra J 873
Insignia I (07/2008 ->) 889
VAUXHALL
Astra MK VI 1307
Insignia Mk I 1323

OP-LS-8350

OPEL
Insignia I (07/2008 ->) 889
VAUXHALL
Insignia Mk I 1323

OP-RK-15054

OPEL
Astra G 869
Zafira A (-> 2005) 915
VAUXHALL
Astra Mk IV 1303
Zafira Mk I 1349

OP-RK-15058

OPEL
Combo II (10/2001 ->) 879
Corsa C 883
VAUXHALL
Combo Mk II (09/2001 ->) 1313
Corsa Mk II 1317

OP-RK-15060

NISSAN
Primastar 837
OPEL
Vivaro (08/2001 ->) 913
RENAULT
Trafic II 1045
VAUXHALL
Vivaro Mk I 1347

OP-RK-15063

OPEL
Meriva A 891
VAUXHALL
Meriva Mk I 1325

OP-RK-15073

OPEL
Astra H 871
VAUXHALL
Astra Mk V 1305

OP-RK-15074

FIAT
Croma II (2005 ->) 303
OPEL
Vectra C (2002 ->) 911
VAUXHALL
Vectra Mk II 1345

OP-RK-4892

OPEL
Astra G 869
Zafira A (-> 2005) 915
VAUXHALL
Astra Mk IV 1303
Zafira Mk I 1349

OP-SB-0067

OPEL
Vectra B (1995 -> 2002) 909
VAUXHALL
Vectra Mk I 1343

OP-SB-0203

OPEL
Combo II (10/2001 ->) 879
Corsa C 883
Meriva A 891
Tigra TwinTop (2004 ->) 907
VAUXHALL
Combo Mk II (09/2001 ->) 1313
Corsa Mk II 1317
Meriva Mk I 1325
Tigra TwinTop 1341

OP-SB-0443

OPEL
Combo II (10/2001 ->) 879

...OP-SB-0443

Corsa C 883
Meriva A 891
Tigra TwinTop (2004 ->) 907
VAUXHALL
Combo Mk II (09/2001 ->) 1313
Corsa Mk II 1317
Meriva Mk I 1325
Tigra TwinTop 1341

OP-SB-10071

OPEL
Insignia I (07/2008 ->) 889
VAUXHALL
Insignia Mk I 1323

OP-SB-10084

FIAT
Croma II (2005 ->) 303
OPEL
Signum 903
Vectra C (2002 ->) 911
SAAB
9-3 II [YS3F] 1075
VAUXHALL
Signum 903
Vectra Mk II 1345

OP-SB-10094

FIAT
Croma II (2005 ->) 303
OPEL
Signum 903
Vectra C (2002 ->) 911
SAAB
9-3 II [YS3F] 1075
VAUXHALL
Signum 903
Vectra Mk II 1345

OP-SB-10114

NISSAN
NV400 829
OPEL
Movano B 899
RENAULT
Master III 1031
VAUXHALL
Movano Mk II 1333

OP-SB-10117

NISSAN
NV400 829
OPEL
Movano B 899
RENAULT
Master III 1031
VAUXHALL
Movano Mk II 1333

OP-SB-10167

OPEL
Astra F 867

...OP-SB-10167

VAUXHALL
Astra Mk III 1301

OP-SB-10168

OPEL
Astra G 869
Astra H 871
Zafira A (-> 2005) 915
VAUXHALL
Astra Mk IV 1303
Astra Mk V 1305
Zafira Mk I 1349

OP-SB-10169

OPEL
Astra G 869
Astra H 871
Zafira A (-> 2005) 915
VAUXHALL
Astra Mk IV 1303
Astra Mk V 1305
Zafira Mk I 1349

OP-SB-10171

NISSAN
Primastar 837
OPEL
Vivaro (08/2001 ->) 913
RENAULT
Trafic II 1045
VAUXHALL
Vivaro Mk I 1347

OP-SB-10445

CHEVROLET
Captiva [C100, C140] 147
OPEL
Antara 863
VAUXHALL
Antara 863

OP-SB-10538

OPEL
Insignia I (07/2008 ->) 889
VAUXHALL
Insignia Mk I 1323

OP-SB-10539

OPEL
Insignia I (07/2008 ->) 889
VAUXHALL
Insignia Mk I 1323

OP-SB-10540

OPEL
Insignia I (07/2008 ->) 889
VAUXHALL
Insignia Mk I 1323

OP-SB-10570

CHEVROLET
Cruze [J300, J305, J308] 149
OPEL
Astra J 873

...OP-SB-10570

VAUXHALL
Astra MK VI 1307

OP-SB-10666

OPEL
Combo I (-> 10/2001) 877
Corsa B 881
Tigra (-> 2000) 905
VAUXHALL
Combo Mk I (-> 09/2001) 1311
Corsa Mk I 1315
Tigra Mk I 1339

OP-SB-10673

OPEL
Combo I (-> 10/2001) 877
Corsa B 881
Tigra (-> 2000) 905
VAUXHALL
Combo Mk I (-> 09/2001) 1311
Corsa Mk I 1315
Tigra Mk I 1339

OP-SB-10793

OPEL
Insignia I (07/2008 ->) 889
VAUXHALL
Insignia Mk I 1323

OP-SB-10794

OPEL
Insignia I (07/2008 ->) 889
VAUXHALL
Insignia Mk I 1323

OP-SB-10842

OPEL
Astra J 873
VAUXHALL
Astra MK VI 1307

OP-SB-10964

OPEL
Insignia I (07/2008 ->) 889
VAUXHALL
Insignia Mk I 1323

OP-SB-10965

OPEL
Insignia I (07/2008 ->) 889
VAUXHALL
Insignia Mk I 1323

OP-SB-13240

OPEL
Combo II (10/2001 ->) 879
VAUXHALL
Combo Mk II (09/2001 ->) 1313

OP-SB-13282

OPEL
Adam 857
Corsa D 885
VAUXHALL
Adam 857

...OP-SB-13282

Corsa Mk III 1319

OP-SB-13378

FIAT
Croma II (2005 ->) 303
OPEL
Signum 903
Vectra C (2002 ->) 911
SAAB
9-3 II [YS3F] 1075
VAUXHALL
Signum 903
Vectra Mk II 1345

OP-SB-13451

OPEL
Corsa C 883
VAUXHALL
Corsa Mk II 1317

OP-SB-13630

NISSAN
NV400 829
OPEL
Movano B 899
RENAULT
Master III 1031
VAUXHALL
Movano Mk II 1333

OP-SB-13644

OPEL
Astra H 871
Meriva B 893
Signum 903
Vectra C (2002 ->) 911
SAAB
9-3 II [YS3F] 1075
VAUXHALL
Astra Mk V 1305
Meriva Mk II 1327
Signum 903
Vectra Mk II 1345

OP-SB-1375

DAEWOO
Lanos - Nexia - Espero 267

OP-SB-1376

OPEL
Astra F 867
VAUXHALL
Astra Mk III 1301

OP-SB-1377

OPEL
Astra F 867
VAUXHALL
Astra Mk III 1301

OP-SB-1378

OPEL
Combo I (-> 10/2001) 877

...OP-SB-1378

Corsa B 881
Tigra (-> 2000) 905
VAUXHALL
Combo Mk I (-> 09/2001) 1311
Corsa Mk I 1315
Tigra Mk I 1339

OP-SB-1380

OPEL
Omega B 901
VAUXHALL
Omega 1335

OP-SB-1382

OPEL
Omega B 901
VAUXHALL
Omega 1335

OP-SB-1383

OPEL
Vectra B (1995 -> 2002) 909
VAUXHALL
Vectra Mk I 1343

OP-SB-1384

FIAT
Croma II (2005 ->) 303
OPEL
Astra G 869
Astra H 871
Meriva B 893
Signum 903
Vectra B (1995 -> 2002) 909
Vectra C (2002 ->) 911
Zafira A (-> 2005) 915
Zafira B (2005 ->) 917
SAAB
9-3 II [YS3F] 1075
9-5 1077
VAUXHALL
Astra Mk IV 1303
Astra Mk V 1305
Meriva Mk II 1327
Signum 903
Vectra Mk I 1343
Vectra Mk II 1345
Zafira Mk I 1349
Zafira Mk II 1351

OP-SB-1385

OPEL
Astra G 869
Zafira A (-> 2005) 915
VAUXHALL
Astra Mk IV 1303
Zafira Mk I 1349

OP-SB-1386

OPEL
Agila I 859
SUBARU
Justy III 1183

...OP-SB-1386

VAUXHALL
Agila I 859

OP-SB-13923

NISSAN
NV400 829
OPEL
Movano B 899
RENAULT
Master III 1031
VAUXHALL
Movano Mk II 1333

OP-SB-14711

OPEL
Mokka 895
VAUXHALL
Mokka 895

OP-SB-14712

OPEL
Mokka 895
VAUXHALL
Mokka 895

OP-SB-15682

OPEL
Vectra C (2002 ->) 911
VAUXHALL
Vectra Mk II 1345

OP-SB-15690

NISSAN
Interstar 811
OPEL
Movano A 897
RENAULT
Master II 1029
VAUXHALL
Movano Mk I 1331

OP-SB-1624

OPEL
Astra F 867
VAUXHALL
Astra Mk III 1301

OP-SB-1644

DAEWOO
Lanos - Nexia - Espero 267

OP-SB-2812

FIAT
Croma II (2005 ->) 303
OPEL
Signum 903
Vectra C (2002 ->) 911
SAAB
9-3 II [YS3F] 1075
VAUXHALL
Signum 903
Vectra Mk II 1345

OP-SB-2824

OPEL
Astra H 871

...OP-SB-2824

Meriva B 893
Zafira B (2005 ->) 917
VAUXHALL
Astra Mk V 1305
Meriva Mk II 1327
Zafira Mk II 1351

OP-SB-3621

OPEL
Vectra B (1995 -> 2002) 909
VAUXHALL
Vectra Mk I 1343

OP-SB-3770

OPEL
Astra G 869
Combo II (10/2001 ->) 879
Corsa C 883
Meriva A 891
Zafira A (-> 2005) 915
VAUXHALL
Astra Mk IV 1303
Combo Mk II (09/2001 ->) 1313
Corsa Mk II 1317
Meriva Mk I 1325
Zafira Mk I 1349

OP-SB-3779

OPEL
Omega B 901
VAUXHALL
Omega 1335

OP-SB-3811

OPEL
Corsa B 881
Tigra (-> 2000) 905
VAUXHALL
Corsa Mk I 1315
Tigra Mk I 1339

OP-SB-3813

OPEL
Omega B 901
VAUXHALL
Omega 1335

OP-SB-3816

OPEL
Vectra B (1995 -> 2002) 909
VAUXHALL
Vectra Mk I 1343

OP-SB-3818

NISSAN
Primastar 837
OPEL
Vivaro (08/2001 ->) 913
RENAULT
Trafic II 1045
VAUXHALL
Vivaro Mk I 1347

OP-SB-3822

FIAT
Croma II (2005 ->) 303

...OP-SB-3822

OPEL
Signum 903
Vectra C (2002 ->) 911
SAAB
9-3 II [YS3F] 1075
VAUXHALL
Signum 903
Vectra Mk II 1345

OP-SB-3823

FIAT
Croma II (2005 ->) 303
OPEL
Signum 903
Vectra C (2002 ->) 911
SAAB
9-3 II [YS3F] 1075
VAUXHALL
Signum 903
Vectra Mk II 1345

OP-SB-4068

DAEWOO
Lanos - Nexia - Espero 267

OP-SB-4069

FIAT
Croma II (2005 ->) 303
OPEL
Signum 903
Vectra C (2002 ->) 911
SAAB
9-3 II [YS3F] 1075
VAUXHALL
Signum 903
Vectra Mk II 1345

OP-SB-4083

OPEL
Vectra B (1995 -> 2002) 909
VAUXHALL
Vectra Mk I 1343

OP-SB-4088

OPEL
Vectra B (1995 -> 2002) 909
VAUXHALL
Vectra Mk I 1343

OP-SB-4089

OPEL
Vectra B (1995 -> 2002) 909
VAUXHALL
Vectra Mk I 1343

OP-SB-4090

OPEL
Vectra B (1995 -> 2002) 909
VAUXHALL
Vectra Mk I 1343

OP-SB-4094

OPEL
Omega B 901

...OP-SB-4094

Vectra B (1995 -> 2002) 909
VAUXHALL
Omega 1335
Vectra Mk I 1343

OP-SB-4451

OPEL
Omega B 901
VAUXHALL
Omega 1335

OP-SB-4456

OPEL
Vectra B (1995 -> 2002) 909
VAUXHALL
Vectra Mk I 1343

OP-SB-4511

OPEL
Omega B 901
VAUXHALL
Omega 1335

OP-SB-4545

OPEL
Combo I (-> 10/2001) 877
Corsa B 881
Tigra (-> 2000) 905
VAUXHALL
Combo Mk I (-> 09/2001) 1311
Corsa Mk I 1315
Tigra Mk I 1339

OP-SB-6642

OPEL
Corsa B 881
Tigra (-> 2000) 905
VAUXHALL
Corsa Mk I 1315
Tigra Mk I 1339

OP-SB-6676

OPEL
Combo I (-> 10/2001) 877
Corsa B 881
Tigra (-> 2000) 905
VAUXHALL
Combo Mk I (-> 09/2001) 1311
Corsa Mk I 1315
Tigra Mk I 1339

OP-SB-6680

OPEL
Astra F 867
VAUXHALL
Astra Mk III 1301

OP-SB-6681

OPEL
Astra F 867
VAUXHALL
Astra Mk III 1301

OP-SB-6734

OPEL
Omega B 901

...OP-SB-6734

VAUXHALL
Omega 1335

OP-SB-6806

OPEL
Astra G 869
Combo II (10/2001 ->) 879
Corsa C 883
Tigra TwinTop (2004 ->) 907
Vectra B (1995 -> 2002) 909
SAAB
9-5 1077
VAUXHALL
Astra Mk IV 1303
Combo Mk II (09/2001 ->) 1313
Corsa Mk II 1317
Tigra TwinTop 1341
Vectra Mk I 1343

OP-SB-6808

OPEL
Astra G 869
Tigra TwinTop (2004 ->) 907
VAUXHALL
Astra Mk IV 1303
Tigra TwinTop 1341

OP-SB-6809

OPEL
Combo II (10/2001 ->) 879
Corsa C 883
VAUXHALL
Combo Mk II (09/2001 ->) 1313
Corsa Mk II 1317

OP-SB-6810

OPEL
Astra G 869
Combo II (10/2001 ->) 879
Meriva A 891
VAUXHALL
Astra Mk IV 1303
Combo Mk II (09/2001 ->) 1313
Meriva Mk I 1325

OP-SB-6846

FIAT
Croma II (2005 ->) 303
OPEL
Signum 903
Vectra C (2002 ->) 911
SAAB
9-3 II [YS3F] 1075
VAUXHALL
Signum 903
Vectra Mk II 1345

OP-SB-6992

FIAT
Croma II (2005 ->) 303
OPEL
Signum 903
Vectra C (2002 ->) 911

...OP-SB-6992

SAAB
9-3 II [YS3F] 1075
VAUXHALL
Signum 903
Vectra Mk II 1345

OP-SB-7215

OPEL
Movano A 897
RENAULT
Master II 1029
VAUXHALL
Movano Mk I 1331

OP-SB-7416

OPEL
Astra F 867
SAAB
900 II (1993 ->) 1079
9-3 I [YS3D] 1073
VAUXHALL
Astra Mk III 1301

OP-SB-7934

OPEL
Astra H 871
VAUXHALL
Astra Mk V 1305

OP-SB-7935

FIAT
Croma II (2005 ->) 303
OPEL
Signum 903
Vectra C (2002 ->) 911
SAAB
9-3 II [YS3F] 1075
VAUXHALL
Signum 903
Vectra Mk II 1345

OP-SB-7957

OPEL
Astra F 867
VAUXHALL
Astra Mk III 1301

OP-SB-7968

OPEL
Omega B 901
VAUXHALL
Omega 1335

OP-SB-8083

NISSAN
Primastar 837
OPEL
Vivaro (08/2001 ->) 913
RENAULT
Trafic II 1045
VAUXHALL
Vivaro Mk I 1347

OP-SB-8420

CHEVROLET
Cruze [J300, J305, J308] 149

...OP-SB-8420

OPEL
Astra J 873
Insignia I (07/2008 ->) 889
VAUXHALL
Astra MK VI 1307
Insignia Mk I 1323

OP-SB-8742

OPEL
Astra H 871
Zafira B (2005 ->) 917
VAUXHALL
Astra Mk V 1305
Zafira Mk II 1351

OP-SB-8744

OPEL
Combo I (-> 10/2001) 877
Corsa B 881
Tigra (-> 2000) 905
VAUXHALL
Combo Mk I (-> 09/2001) 1311
Corsa Mk I 1315
Tigra Mk I 1339

OP-SB-8745

OPEL
Combo I (-> 10/2001) 877
Combo II (10/2001 ->) 879
Corsa B 881
Corsa C 883
Tigra (-> 2000) 905
Tigra TwinTop (2004 ->) 907
VAUXHALL
Combo Mk I (-> 09/2001) 1311
Combo Mk II (09/2001 ->) 1313
Corsa Mk I 1315
Corsa Mk II 1317
Tigra Mk I 1339
Tigra TwinTop 1341

OP-SB-8748

NISSAN
Interstar 811
OPEL
Movano A 897
RENAULT
Master II 1029
VAUXHALL
Movano Mk I 1331

OP-SB-8751

OPEL
Signum 903
Vectra C (2002 ->) 911
SAAB
9-3 II [YS3F] 1075
VAUXHALL
Signum 903
Vectra Mk II 1345

OP-SB-8779

CHEVROLET
Captiva [C100, C140] 147

...OP-SB-8779

OPEL
Antara 863
VAUXHALL
Antara 863

OP-SB-8780

CHEVROLET
Captiva [C100, C140] 147
OPEL
Antara 863
VAUXHALL
Antara 863

OP-SB-8962

OPEL
Zafira A (-> 2005) 915
VAUXHALL
Zafira Mk I 1349

OP-SB-8963

OPEL
Zafira A (-> 2005) 915
VAUXHALL
Zafira Mk I 1349

OP-SB-8982

OPEL
Astra F 867
SAAB
900 II (1993 ->) 1079
9-3 I [YS3D] 1073
VAUXHALL
Astra Mk III 1301

OP-SB-8986

OPEL
Insignia I (07/2008 ->) 889
VAUXHALL
Insignia Mk I 1323

OP-SB-9075

OPEL
Agila I 859
SUZUKI
Alto IV [FF] 1191
Ignis I 1203
Ignis II 1205
VAUXHALL
Agila I 859

OP-SB-9708

OPEL
Combo I (-> 10/2001) 877
Corsa B 881
Tigra (-> 2000) 905
VAUXHALL
Combo Mk I (-> 09/2001) 1311
Corsa Mk I 1315
Tigra Mk I 1339

OP-SB-9716

DAEWOO
Lanos - Nexia - Espero 267

OP-SB-9720

OPEL
Astra G 869
Corsa C 883
Meriva A 891
Vectra B (1995 -> 2002) 909
Zafira A (-> 2005) 915
VAUXHALL
Astra Mk IV 1303
Corsa Mk II 1317
Meriva Mk I 1325
Vectra Mk I 1343
Zafira Mk I 1349

OP-SB-9722

OPEL
Astra G 869
Corsa C 883
Tigra TwinTop (2004 ->) 907
Vectra B (1995 -> 2002) 909
VAUXHALL
Astra Mk IV 1303
Corsa Mk II 1317
Tigra TwinTop 1341
Vectra Mk I 1343

OP-SB-9728

OPEL
Signum 903
Vectra C (2002 ->) 911
VAUXHALL
Signum 903
Vectra Mk II 1345

OP-TC-0084

OPEL
Combo I (-> 10/2001) 877
Corsa B 881
Tigra (-> 2000) 905
VAUXHALL
Combo Mk I (-> 09/2001) 1311
Corsa Mk I 1315
Tigra Mk I 1339

OP-TC-0085

OPEL
Combo I (-> 10/2001) 877
Corsa B 881
Tigra (-> 2000) 905
VAUXHALL
Combo Mk I (-> 09/2001) 1311
Corsa Mk I 1315
Tigra Mk I 1339

OP-TC-0488

OPEL
Combo I (-> 10/2001) 877
Corsa B 881
Tigra (-> 2000) 905
VAUXHALL
Combo Mk I (-> 09/2001) 1311
Corsa Mk I 1315
Tigra Mk I 1339

OP-TC-0489

OPEL
Combo I (-> 10/2001) 877
Corsa B 881
Tigra (-> 2000) 905
VAUXHALL
Combo Mk I (-> 09/2001) 1311
Corsa Mk I 1315
Tigra Mk I 1339

OP-TC-10115

CHEVROLET
Cruze [J300, J305, J308] 149
OPEL
Astra J 873
VAUXHALL
Astra MK VI 1307

OP-TC-10116

CHEVROLET
Cruze [J300, J305, J308] 149
OPEL
Astra J 873
VAUXHALL
Astra MK VI 1307

OP-TC-10137

OPEL
Omega B 901
VAUXHALL
Omega 1335

OP-TC-13453

OPEL
Zafira C (10/2011 ->) [P12] 919
VAUXHALL
Zafira Mk III 1353

OP-TC-13454

OPEL
Zafira C (10/2011 ->) [P12] 919
VAUXHALL
Zafira Mk III 1353

OP-TC-13621

FIAT
Croma II (2005 ->) 303
OPEL
Signum 903
Vectra C (2002 ->) 911
VAUXHALL
Signum 903
Vectra Mk II 1345

OP-TC-13925

OPEL
Insignia I (07/2008 ->) 889
VAUXHALL
Insignia Mk I 1323

OP-TC-13926

OPEL
Insignia I (07/2008 ->) 889
VAUXHALL
Insignia Mk I 1323

OP-TC-13927

OPEL
Astra J 873
VAUXHALL
Astra MK VI 1307

OP-TC-1955

FIAT
Croma II (2005 ->) 303
OPEL
Signum 903
Vectra C (2002 ->) 911
SAAB
9-3 II [YS3F] 1075
VAUXHALL
Signum 903
Vectra Mk II 1345

OP-TC-1956

FIAT
Croma II (2005 ->) 303
OPEL
Signum 903
Vectra C (2002 ->) 911
SAAB
9-3 II [YS3F] 1075
VAUXHALL
Signum 903
Vectra Mk II 1345

OP-TC-3619

OPEL
Agila I 859
SUBARU
Justy III 1183
SUZUKI
Ignis II 1205
Wagon R+ 1219
VAUXHALL
Agila I 859

OP-TC-4081

FIAT
Croma II (2005 ->) 303
OPEL
Signum 903
Vectra C (2002 ->) 911
SAAB
9-3 II [YS3F] 1075
VAUXHALL
Signum 903
Vectra Mk II 1345

OP-TC-5610

OPEL
Omega B 901
VAUXHALL
Omega 1335

OP-TC-7435

OPEL
Vectra B (1995 -> 2002) 909
VAUXHALL
Vectra Mk I 1343

OP-TC-7976

OPEL
Omega B 901
VAUXHALL
Omega 1335

OP-TC-8347

OPEL
Insignia I (07/2008 ->) 889
VAUXHALL
Insignia Mk I 1323

OP-TC-8348

OPEL
Insignia I (07/2008 ->) 889
VAUXHALL
Insignia Mk I 1323

OP-TC-8749

NISSAN
Interstar 811
OPEL
Movano A 897
RENAULT
Master II 1029
VAUXHALL
Movano Mk I 1331

OP-TC-8750

NISSAN
Interstar 811
OPEL
Movano A 897
RENAULT
Master II 1029
VAUXHALL
Movano Mk I 1331

OP-WP-0068

OPEL
Astra F 867
VAUXHALL
Astra Mk III 1301

OP-WP-0069

OPEL
Astra F 867
VAUXHALL
Astra Mk III 1301

OP-WP-0210

OPEL
Vectra B (1995 -> 2002) 909
VAUXHALL
Vectra Mk I 1343

OP-WP-0211

OPEL
Vectra B (1995 -> 2002) 909
VAUXHALL
Vectra Mk I 1343

OP-WP-0568

OPEL
Omega B 901

...OP-WP-0568

VAUXHALL
Omega 1335

OP-WP-0569

OPEL
Omega B 901
VAUXHALL
Omega 1335

OP-WP-0670

OPEL
Astra G 869
Zafira A (-> 2005) 915
VAUXHALL
Astra Mk IV 1303
Zafira Mk I 1349

OP-WP-0671

OPEL
Astra G 869
Zafira A (-> 2005) 915
VAUXHALL
Astra Mk IV 1303
Zafira Mk I 1349

OP-WP-0833

DAEWOO
Nubira I 273

OP-WP-0836

DAEWOO
Nubira I 273

OP-WP-0995

OPEL
Combo II (10/2001 ->) 879
Corsa C 883
Tigra TwinTop (2004 ->) 907
VAUXHALL
Combo Mk II (09/2001 ->) 1313
Corsa Mk II 1317
Tigra TwinTop 1341

OP-WP-0996

OPEL
Combo II (10/2001 ->) 879
Corsa C 883
Tigra TwinTop (2004 ->) 907
VAUXHALL
Combo Mk II (09/2001 ->) 1313
Corsa Mk II 1317
Tigra TwinTop 1341

OP-WP-14709

OPEL
Mokka 895
VAUXHALL
Mokka 895

OP-WP-14710

OPEL
Mokka 895
VAUXHALL
Mokka 895

OP-WP-1902

OPEL
Meriva A 891
VAUXHALL
Meriva Mk I 1325

OP-WP-1903

OPEL
Meriva A 891
VAUXHALL
Meriva Mk I 1325

OP-WP-2822

OPEL
Astra H 871
Meriva B 893
Zafira B (2005 ->) 917
VAUXHALL
Astra Mk V 1305
Meriva Mk II 1327
Zafira Mk II 1351

OP-WP-2823

OPEL
Astra H 871
Meriva B 893
Zafira B (2005 ->) 917
VAUXHALL
Astra Mk V 1305
Meriva Mk II 1327
Zafira Mk II 1351

OP-WP-3960

OPEL
Adam 857
Corsa D 885
VAUXHALL
Adam 857
Corsa Mk III 1319

OP-WP-3961

OPEL
Adam 857
Corsa D 885
VAUXHALL
Adam 857
Corsa Mk III 1319

OP-WP-5570

DAEWOO
Lanos - Nexia - Espero 267

OP-WP-5571

DAEWOO
Lanos - Nexia - Espero 267

OP-WP-7222

CHEVROLET
Captiva [C100, C140] 147
OPEL
Antara 863
VAUXHALL
Antara 863

OP-WP-7223

CHEVROLET
Captiva [C100, C140] 147

...OP-WP-7223
OPEL
Antara 863
VAUXHALL
Antara 863

PE-AX-0645
CITROËN
Xantia 233
PEUGEOT
406 945

PE-AX-0847
PEUGEOT
406 945

PE-AX-0860
CITROËN
C4 I (11/2004 ->) [LA, LC] 191
PEUGEOT
307 937

PE-AX-0862
PEUGEOT
607 951

PE-AX-12630
CITROËN
C4 Cactus 189
PEUGEOT
2008 959
208 931

PE-AX-12654
CITROËN
DS5 215
PEUGEOT
RCZ 983

PE-AX-12660
PEUGEOT
508 949

PE-AX-13279
CITROËN
C4 Aircross 187
PEUGEOT
4008 965

PE-AX-13634
CITROËN
C2 - C3 183
PEUGEOT
1007 957

PE-AX-14704
PEUGEOT
308 II 941

PE-AX-1570
PEUGEOT
206 927

PE-AX-2059
CITROËN
C2 - C3 183

...PE-AX-2059
PEUGEOT
1007 957

PE-AX-3327
CITROËN
C6 203
PEUGEOT
407 947

PE-AX-3915
CITROËN
XM 235

PE-AX-4740
CITROËN
C3 (II) - C3 Picasso 185
PEUGEOT
207 929

PE-AX-5047
CITROËN
Evasion / Synergie 217
Jumpy I / Dispatch I (06/1994 ->) 223
FIAT
Scudo I 339
Ulysse I (-> 08/2002) 351
LANCIA
Zeta 599
PEUGEOT
806 953
Expert I 975

PE-AX-5747
PEUGEOT
405 943

PE-AX-5749
CITROËN
Xantia 233
PEUGEOT
205 925

PE-AX-6901
CITROËN
XM 235

PE-AX-6907
PEUGEOT
306 935

PE-AX-7067
CITROËN
C4 II (11/2009 ->) [B7] 193
DS4 213
PEUGEOT
3008 I 961
308 939
5008 967

PE-AX-7426
CITROËN
C-Crosser 207
MITSUBISHI
Outlander II 791

...PE-AX-7426
PEUGEOT
4007 963

PE-AX-7969
CITROËN
Berlingo II (04/2008 ->) 179
PEUGEOT
Partner II 981

PE-BJ-0409
PEUGEOT
306 935

PE-BJ-0837
CITROËN
Berlingo II (04/2008 ->) 179
C4 I (11/2004 ->) [LA, LC] 191
C4 II (11/2009 ->) [B7] 193
C4 Picasso I / Grand Picasso I (10/2006 ->) 195
DS4 213
DS5 215
PEUGEOT
3008 I 961
307 937
308 939
5008 967
Partner II 981
RCZ 983

PE-BJ-12663
PEUGEOT
508 949

PE-BJ-13251
CITROËN
C6 203
PEUGEOT
407 947

PE-BJ-14684
PEUGEOT
308 II 941

PE-BJ-15315
CITROËN
C3 (II) - C3 Picasso 185
DS3 211
PEUGEOT
208 931

PE-BJ-3322
CITROËN
C6 203
PEUGEOT
407 947

PE-BJ-3323
CITROËN
C5 (02/2008 ->) [RD_, TD_] 201
C6 203
PEUGEOT
407 947

PE-BJ-3347
CITROËN
C5 199

...PE-BJ-3347
Xantia 233
XM 235
PEUGEOT
405 943
406 945
607 951

PE-BJ-3356
CITROËN
Saxo 229
PEUGEOT
106 921

PE-BJ-3847
CITROËN
C2 - C3 183
C3 (II) - C3 Picasso 185
PEUGEOT
207 929

PE-BJ-4249
PEUGEOT
405 943

PE-BJ-4501
CITROËN
C2 - C3 183
PEUGEOT
1007 957

PE-BJ-6909
PEUGEOT
306 935

PE-DS-5041
CITROËN
Saxo 229
Xantia 233
PEUGEOT
106 921
406 945

PE-DS-5043
PEUGEOT
406 945

PE-DS-6294
PEUGEOT
205 925

PE-DS-6902
PEUGEOT
405 943

PE-DS-6903
PEUGEOT
405 943

PE-DS-6904
PEUGEOT
607 951

PE-DS-6905
PEUGEOT
607 951

PE-DS-6923
PEUGEOT
306 935

PE-DS-6970
CITROËN
Berlingo I (07/1996 ->) 177
PEUGEOT
306 935
Partner I - Ranch 979

PE-DS-6973
CITROËN
Saxo 229
PEUGEOT
106 921

PE-DS-6974
CITROËN
Saxo 229
PEUGEOT
106 921

PE-DS-6975
CITROËN
Saxo 229
PEUGEOT
106 921

PE-DS-6976
CITROËN
Saxo 229
PEUGEOT
106 921

PE-ES-0088
PEUGEOT
406 945

PE-ES-0089
PEUGEOT
406 945

PE-ES-0664
CITROËN
Saxo 229
PEUGEOT
106 921

PE-ES-0780
CITROËN
Saxo 229

PE-ES-12631
CITROËN
C4 Cactus 189
PEUGEOT
2008 959
208 931

PE-ES-12632
CITROËN
C4 Cactus 189
PEUGEOT
2008 959
208 931

PE-ES-12655
CITROËN
DS5 215
PEUGEOT
RCZ 983

PE-ES-12661
PEUGEOT
508 949

PE-ES-12662
PEUGEOT
508 949

PE-ES-1656
CITROËN
Xantia 233
XM 235
PEUGEOT
607 951

PE-ES-1668
CITROËN
Xantia 233
XM 235
PEUGEOT
607 951

PE-ES-3330
CITROËN
C6 203
PEUGEOT
407 947

PE-ES-3331
CITROËN
C6 203
PEUGEOT
407 947

PE-ES-4163
CITROËN
C3 (II) - C3 Picasso 185
PEUGEOT
207 929

PE-ES-4164
CITROËN
C3 (II) - C3 Picasso 185
PEUGEOT
207 929

PE-ES-5042
CITROËN
Evasion / Synergie 217
Jumpy I / Dispatch I (06/1994 ->) 223
FIAT
Scudo I 339
Ulysse I (-> 08/2002) 351
LANCIA
Zeta 599
PEUGEOT
806 953
Expert I 975

PE-ES-5703
CITROËN
Berlingo I (07/1996 ->) 177
C4 I (11/2004 ->) [LA, LC] 191
Xsara 237
Xsara Picasso 239
ZX 241
PEUGEOT
205 925
306 935
307 937
Partner I - Ranch 979

PE-ES-5721
PEUGEOT
405 943

PE-ES-5722
PEUGEOT
405 943

PE-ES-5723
CITROËN
C4 I (11/2004 ->) [LA, LC] 191
Saxo 229
Xantia 233
XM 235
PEUGEOT
106 921
206 927
307 937

PE-ES-5724
CITROËN
C4 I (11/2004 ->) [LA, LC] 191
Saxo 229
Xantia 233
XM 235
PEUGEOT
106 921
206 927
307 937

PE-ES-7065
CITROËN
Berlingo II (04/2008 ->) 179
C4 II (11/2009 ->) [B7] 193
DS4 213
PEUGEOT
3008 I 961
308 939
5008 967
Partner II 981

PE-ES-7066
CITROËN
Berlingo II (04/2008 ->) 179
C4 II (11/2009 ->) [B7] 193
DS4 213
PEUGEOT
3008 I 961
308 939
5008 967
Partner II 981

PE-ES-7414
CITROËN
C-Crosser 207
MITSUBISHI
Outlander II 791
PEUGEOT
4007 963

PE-ES-8473
PEUGEOT
407 947

PE-ES-8474
PEUGEOT
407 947

PE-LS-0592
CITROËN
C5 199
Xantia 233
PEUGEOT
406 945
607 951

PE-LS-0595
CITROËN
Xantia 233

PE-LS-0785
PEUGEOT
406 945

PE-LS-1048
CITROËN
Evasion / Synergie 217
Jumpy I / Dispatch I (06/1994 ->) 223
FIAT
Scudo I 339
Ulysse I (-> 08/2002) 351
LANCIA
Zeta 599
PEUGEOT
806 953
Expert I 975

PE-LS-1118
PEUGEOT
405 943

PE-LS-12664
PEUGEOT
508 949

PE-LS-1573
CITROËN
C2 - C3 183
C3 (II) - C3 Picasso 185
C4 Cactus 189
DS3 211
PEUGEOT
1007 957
2008 959
206 927

PE-LS-3324
CITROËN
C5 (02/2008 ->) [RD_, TD_] 201

...PE-LS-3324
C6 203
PEUGEOT
407 947

PE-LS-3325
CITROËN
C5 (02/2008 ->) [RD_, TD_] 201
C6 203
PEUGEOT
407 947

PE-LS-3326
CITROËN
C5 (02/2008 ->) [RD_, TD_] 201
C6 203
PEUGEOT
407 947

PE-LS-3817
CITROËN
Berlingo II (04/2008 ->) 179
C4 I (11/2004 ->) [LA, LC] 191
C4 II (11/2009 ->) [B7] 193
C4 Picasso I / Grand Picasso I (10/2006 ->) 195
C4 Picasso II / Grand Picasso II (02/2013 ->) 197
DS4 213
DS5 215
PEUGEOT
3008 I 961
307 937
308 939
308 II 941
5008 967
Partner II 981
RCZ 983

PE-LS-3989
CITROËN
C3 (II) - C3 Picasso 185
C-ELYSEE 209
PEUGEOT
207 929
208 931
301 933

PE-LS-3990
CITROËN
C3 (II) - C3 Picasso 185
C-ELYSEE 209
PEUGEOT
207 929
208 931
301 933

PE-LS-5046
CITROËN
Berlingo I (07/1996 ->) 177
Xsara 237
Xsara Picasso 239
ZX 241
PEUGEOT
306 935

...PE-LS-5046
Partner I - Ranch 979

PE-LS-7423
CITROËN
C4 Aircross 187
C-Crosser 207
MITSUBISHI
Outlander II 791
PEUGEOT
4007 963

PE-LS-7424
CITROËN
C4 Aircross 187
C-Crosser 207
MITSUBISHI
Outlander II 791
PEUGEOT
4007 963

PE-LS-7425
CITROËN
C4 Aircross 187
C-Crosser 207
MITSUBISHI
ASX [GA_W_] 765
Outlander II 791
PEUGEOT
4007 963
4008 965

PE-RK-15047
PEUGEOT
206 927

PE-RK-15048
PEUGEOT
206 927

PE-SB-0225
CITROËN
Berlingo II (04/2008 ->) 179
C4 I (11/2004 ->) [LA, LC] 191
C4 II (11/2009 ->) [B7] 193
C4 Picasso I / Grand Picasso I (10/2006 ->) 195
DS4 213
PEUGEOT
3008 I 961
307 937
308 939
5008 967
Partner II 981

PE-SB-0998
PEUGEOT
406 945

PE-SB-10108
PEUGEOT
206 927

PE-SB-10110
PEUGEOT
206 927

PE-SB-10431
CITROËN
C4 I (11/2004 ->) [LA, LC] 191
PEUGEOT
307 937

PE-SB-10500
CITROËN
Nemo 227
FIAT
Fiorino (2008 ->) 315
Qubo 337
PEUGEOT
Bipper 969

PE-SB-10717
CITROËN
C5 199

PE-SB-10738
PEUGEOT
207 929

PE-SB-10741
PEUGEOT
207 929

PE-SB-10743
PEUGEOT
407 947

PE-SB-10744
PEUGEOT
607 951

PE-SB-10745
PEUGEOT
607 951

PE-SB-10746
CITROËN
Berlingo II (04/2008 ->) 179
PEUGEOT
Partner II 981

PE-SB-10852
PEUGEOT
207 929

PE-SB-10925
CITROËN
C5 (02/2008 ->) [RD_, TD_] 201
PEUGEOT
407 947

PE-SB-10926
PEUGEOT
407 947

PE-SB-10927
PEUGEOT
407 947

PE-SB-1137
CITROËN
Jumper I / Relay I (02/1994 ->) [230, 244] 219

...PE-SB-1137
FIAT
Ducato II (03/1994 ->) 309
PEUGEOT
Boxer I 971

PE-SB-1138
CITROËN
Jumper I / Relay I (02/1994 ->) [230, 244] 219
FIAT
Ducato II (03/1994 ->) 309
PEUGEOT
Boxer I 971

PE-SB-12544
CITROËN
Berlingo II (04/2008 ->) 179
PEUGEOT
Partner II 981

PE-SB-12589
CITROËN
C4 I (11/2004 ->) [LA, LC] 191
C4 II (11/2009 ->) [B7] 193
C4 Picasso I / Grand Picasso I (10/2006 ->) 195
DS4 213
PEUGEOT
308 939

PE-SB-12590
CITROËN
C3 (II) - C3 Picasso 185
PEUGEOT
207 929

PE-SB-12652
CITROËN
C5 199
C5 (02/2008 ->) [RD_, TD_] 201
PEUGEOT
407 947

PE-SB-12653
CITROËN
C5 199
C5 (02/2008 ->) [RD_, TD_] 201
PEUGEOT
407 947

PE-SB-1295
PEUGEOT
405 943

PE-SB-1301
CITROËN
Saxo 229
PEUGEOT
106 921

PE-SB-1303
CITROËN
Berlingo I (07/1996 ->) 177
Xsara 237

...PE-SB-1303

Xsara Picasso 239
ZX 241
PEUGEOT
306 935
Partner I - Ranch 979

PE-SB-1304

CITROËN
Berlingo I (07/1996 ->) 177
Xsara 237
Xsara Picasso 239
ZX 241
PEUGEOT
306 935
Partner I - Ranch 979

PE-SB-1310

CITROËN
Saxo 229
PEUGEOT
106 921

PE-SB-1311

CITROËN
Evasion / Synergie 217
Jumpy I / Dispatch I (06/1994 ->) 223
FIAT
Scudo I 339
Ulysse I (-> 08/2002) 351
LANCIA
Zeta 599
PEUGEOT
806 953
Expert I 975

PE-SB-1312

CITROËN
C8 205
Evasion / Synergie 217
Jumpy I / Dispatch I (06/1994 ->) 223
FIAT
Scudo I 339
Ulysse I (-> 08/2002) 351
Ulysse II (08/2002 ->) 353
LANCIA
Phedra 593
Zeta 599
PEUGEOT
806 953
807 955
Expert I 975

PE-SB-1313

CITROËN
Evasion / Synergie 217
Jumpy I / Dispatch I (06/1994 ->) 223
FIAT
Scudo I 339
Ulysse I (-> 08/2002) 351
LANCIA
Zeta 599

...PE-SB-1313

PEUGEOT
806 953
Expert I 975

PE-SB-1314

PEUGEOT
205 925

PE-SB-1315

PEUGEOT
205 925

PE-SB-1316

PEUGEOT
405 943

PE-SB-1317

PEUGEOT
405 943

PE-SB-1318

PEUGEOT
406 945

PE-SB-1319

PEUGEOT
406 945

PE-SB-1320

CITROËN
Berlingo II (04/2008 ->) 179
C4 I (11/2004 ->) [LA, LC] 191
C4 II (11/2009 ->) [B7] 193
C4 Picasso I / Grand Picasso I (10/2006 ->) 195
DS4 213
PEUGEOT
206 927
3008 I 961
307 937
308 939
5008 967
Partner II 981

PE-SB-13457

PEUGEOT
508 949

PE-SB-13632

PEUGEOT
206 927

PE-SB-13633

PEUGEOT
206 927

PE-SB-13682

PEUGEOT
1007 957

PE-SB-13683

PEUGEOT
206 927

PE-SB-14764

PEUGEOT
208 931

PE-SB-1632

PEUGEOT
405 943

PE-SB-2229

PEUGEOT
406 945

PE-SB-2344

PEUGEOT
206 927

PE-SB-2826

CITROËN
XM 235
PEUGEOT
607 951

PE-SB-3218

PEUGEOT
405 943

PE-SB-3492

CITROËN
C5 (02/2008 ->) [RD_, TD_] 201
C6 203
PEUGEOT
407 947
508 949

PE-SB-3513

CITROËN
C5 (02/2008 ->) [RD_, TD_] 201
PEUGEOT
407 947

PE-SB-3866

PEUGEOT
406 945

PE-SB-3947

PEUGEOT
206 927

PE-SB-4516

PEUGEOT
406 945

PE-SB-4528

PEUGEOT
205 925

PE-SB-4532

PEUGEOT
406 945

PE-SB-4546

CITROËN
Saxo 229
PEUGEOT
106 921

PE-SB-4743

CITROËN
C3 (II) - C3 Picasso 185
PEUGEOT
207 929

...PE-SB-4743

208 931
301 933

PE-SB-4744

CITROËN
C3 (II) - C3 Picasso 185
PEUGEOT
207 929
301 933

PE-SB-4963

PEUGEOT
206 927

PE-SB-6649

PEUGEOT
205 925

PE-SB-6650

PEUGEOT
205 925

PE-SB-6703

PEUGEOT
406 945

PE-SB-6704

PEUGEOT
406 945

PE-SB-6729

CITROËN
Saxo 229
PEUGEOT
106 921

PE-SB-6730

CITROËN
Saxo 229
PEUGEOT
106 921

PE-SB-6750

PEUGEOT
206 927

PE-SB-6773

CITROËN
Xsara 237
PEUGEOT
306 935

PE-SB-6774

CITROËN
Berlingo I (07/1996 ->) 177
Xsara 237
ZX 241
PEUGEOT
306 935
Partner I - Ranch 979

PE-SB-6777

PEUGEOT
306 935

PE-SB-6778

PEUGEOT
106 921

PE-SB-6779
PEUGEOT
206 927

PE-SB-6780
PEUGEOT
307 937

PE-SB-6781
CITROËN
C4 I (11/2004 ->) [LA, LC] 191
C4 Picasso I / Grand Picasso I (10/2006 ->) 195
PEUGEOT
307 937

PE-SB-6782
PEUGEOT
406 945

PE-SB-6783
PEUGEOT
406 945

PE-SB-7417
PEUGEOT
205 925

PE-SB-7429
CITROËN
C4 Aircross 187
C-Crosser 207
MITSUBISHI
Outlander II 791
PEUGEOT
4007 963
4008 965

PE-SB-7430
CITROËN
C4 Aircross 187
C-Crosser 207
MITSUBISHI
Outlander II 791
PEUGEOT
4007 963
4008 965

PE-SB-7757
PEUGEOT
405 943

PE-SB-7772
PEUGEOT
205 925

PE-SB-7962
PEUGEOT
406 945

PE-SB-7963
PEUGEOT
607 951

PE-SB-7964
PEUGEOT
607 951

PE-SB-8468
CITROËN
C5 (02/2008 ->) [RD_, TD_] 201
C6 203
PEUGEOT
407 947

PE-SB-8469
CITROËN
C5 (02/2008 ->) [RD_, TD_] 201
C6 203
PEUGEOT
407 947

PE-SB-8472
PEUGEOT
407 947

PE-SB-8484
CITROËN
C8 205
FIAT
Ulysse II (08/2002 ->) 353
LANCIA
Phedra 593
PEUGEOT
807 955

PE-SB-8784
CITROËN
Evasion / Synergie 217
Jumpy I / Dispatch I (06/1994 ->) 223
FIAT
Ducato II (03/1994 ->) 309
Scudo I 339
Ulysse I (-> 08/2002) 351
LANCIA
Zeta 599
PEUGEOT
806 953
Boxer I 971
Expert I 975

PE-SB-8839
CITROËN
C4 Picasso I / Grand Picasso I (10/2006 ->) 195
PEUGEOT
5008 967

PE-SB-8840
CITROËN
Berlingo I (07/1996 ->) 177
PEUGEOT
405 943
Partner I - Ranch 979

PE-SB-9970
CITROËN
Saxo 229
PEUGEOT
106 921

PE-SB-9972
PEUGEOT
405 943

PE-SB-9974
PEUGEOT
205 925

PE-SB-9975
CITROËN
Berlingo I (07/1996 ->) 177
ZX 241
PEUGEOT
306 935
Partner I - Ranch 979

PE-SB-9976
CITROËN
Berlingo I (07/1996 ->) 177
ZX 241
PEUGEOT
Partner I - Ranch 979

PE-SB-9981
PEUGEOT
206 927

PE-SB-9984
PEUGEOT
206 927

PE-SB-9985
PEUGEOT
307 937

PE-SB-9986
PEUGEOT
406 945

PE-TC-0076
PEUGEOT
405 943

PE-TC-0077
PEUGEOT
405 943

PE-TC-0078
PEUGEOT
405 943

PE-TC-0079
PEUGEOT
405 943

PE-TC-0218
PEUGEOT
406 945

PE-TC-0219
PEUGEOT
406 945

PE-TC-0999
CITROËN
Berlingo II (04/2008 ->) 179
C4 I (11/2004 ->) [LA, LC] 191
C4 Picasso I / Grand Picasso I (10/2006 ->) 195
PEUGEOT
307 937

...PE-TC-0999
Partner II 981

PE-TC-1032
CITROËN
Berlingo II (04/2008 ->) 179
C4 I (11/2004 ->) [LA, LC] 191
C4 Picasso I / Grand Picasso I (10/2006 ->) 195
PEUGEOT
307 937
Partner II 981

PE-TC-1033
PEUGEOT
206 927

PE-TC-1034
PEUGEOT
206 927

PE-TC-1035
CITROËN
XM 235
PEUGEOT
607 951

PE-TC-1036
CITROËN
XM 235
PEUGEOT
607 951

PE-TC-13455
PEUGEOT
508 949

PE-TC-13456
PEUGEOT
508 949

PE-TC-14687
PEUGEOT
308 II 941

PE-TC-14688
PEUGEOT
308 II 941

PE-TC-14719
PEUGEOT
407 947

PE-TC-14720
PEUGEOT
407 947

PE-TC-1571
PEUGEOT
206 927

PE-TC-1572
PEUGEOT
206 927

PE-TC-3198
PEUGEOT
205 925

PE-TC-3199
PEUGEOT
205 925

PE-TC-3538
PEUGEOT
206 927

PE-TC-3539
PEUGEOT
206 927

PE-TC-3882
PEUGEOT
206 927

PE-TC-3883
PEUGEOT
206 927

PE-TC-5754
PEUGEOT
407 947

PE-TC-5755
PEUGEOT
407 947

PE-TC-7381
CITROËN
C4 II (11/2009 ->) [B7] 193
DS4 213
PEUGEOT
3008 I 961
308 939
5008 967

PE-TC-7382
CITROËN
C4 II (11/2009 ->) [B7] 193
DS4 213
PEUGEOT
3008 I 961
308 939
5008 967

PE-TC-8470
CITROËN
C5 (02/2008 ->) [RD_, TD_] 201
C6 203
PEUGEOT
407 947

PE-TC-8482
CITROËN
C8 205
FIAT
Ulysse II (08/2002 ->) 353
LANCIA
Phedra 593
PEUGEOT
807 955

PE-TC-8483
CITROËN
C8 205

...PE-TC-8483
FIAT
Ulysse II (08/2002 ->) 353
LANCIA
Phedra 593
PEUGEOT
807 955

PE-TC-8875
PEUGEOT
406 945

PE-TC-8876
PEUGEOT
406 945

PE-WP-0626
CITROËN
Saxo 229
PEUGEOT
106 921

PE-WP-0627
CITROËN
Saxo 229
PEUGEOT
106 921

PE-WP-13403
PEUGEOT
306 935

PE-WP-13404
PEUGEOT
306 935

PE-WP-13407
PEUGEOT
306 935

PE-WP-13408
PEUGEOT
306 935

PE-WP-13659
PEUGEOT
208 931

PE-WP-13660
PEUGEOT
208 931

PE-WP-14685
PEUGEOT
308 II 941

PE-WP-14686
PEUGEOT
308 II 941

PE-WP-3320
PEUGEOT
407 947

PE-WP-3321
PEUGEOT
407 947

PE-WP-4027
CITROËN
C1 (06/2005 ->) [PM_, PN_] 181
PEUGEOT
107 923
TOYOTA
Aygo 1231

PE-WP-4028
CITROËN
C1 (06/2005 ->) [PM_, PN_] 181
PEUGEOT
107 923
TOYOTA
Aygo 1231

PE-WP-4741
CITROËN
C3 (II) - C3 Picasso 185
PEUGEOT
207 929

PE-WP-4742
CITROËN
C3 (II) - C3 Picasso 185
PEUGEOT
207 929

PE-WP-6979
CITROËN
Saxo 229
PEUGEOT
106 921

PE-WP-6980
CITROËN
Saxo 229
PEUGEOT
106 921

PE-WP-7427
CITROËN
C4 Aircross 187
C-Crosser 207
MITSUBISHI
Outlander II 791
PEUGEOT
4007 963
4008 965

PE-WP-7428
CITROËN
C4 Aircross 187
C-Crosser 207
MITSUBISHI
Outlander II 791
PEUGEOT
4007 963
4008 965

RE-AX-0380
RENAULT
Safrane 1043

RE-AX-0589
NISSAN
Kubistar 815
RENAULT
Clio II - Thalia 997
Kangoo I 1015

RE-AX-0602
RENAULT
Clio I 995

RE-AX-0675
RENAULT
Megane I - Scenic I 1033

RE-AX-0676
RENAULT
Megane I - Scenic I 1033

RE-AX-0854
RENAULT
Clio II - Thalia 997

RE-AX-0855
RENAULT
Clio II - Thalia 997

RE-AX-0858
RENAULT
Megane I - Scenic I 1033

RE-AX-0859
RENAULT
Megane I - Scenic I 1033

RE-AX-1060
RENAULT
Laguna II 1023

RE-AX-10820
RENAULT
Clio II - Thalia 997
Kangoo I 1015
Kangoo II 1017

RE-AX-13416
RENAULT
Captur 993
Clio IV 1003
Zoe 1055

RE-AX-13417
DACIA
Dokker 245
Lodgy 249
Logan II 253
Sandero II 257

RE-AX-13462
RENAULT
Megane I - Scenic I 1033

RE-AX-14777
RENAULT
Latitude [L70_] 1027

RE-AX-15262
RENAULT
Koleos 1019

RE-AX-1564
RENAULT
Clio II - Thalia 997

RE-AX-1616
RENAULT
Kangoo I 1015

RE-AX-2039
RENAULT
Express - Rapid 1009

RE-AX-2087
RENAULT
Kangoo I 1015

RE-AX-2091
RENAULT
Megane II - Scenic II 1037

RE-AX-2097
NISSAN
Interstar 811
OPEL
Movano A 897
RENAULT
Master II 1029
VAUXHALL
Movano Mk I 1331

RE-AX-2103
NISSAN
Micra [K12] (2003 ->) 819
RENAULT
Clio III 1001
Modus 1041

RE-AX-2374
RENAULT
Espace III - Avantime 1005

RE-AX-2831
RENAULT
Espace IV 1007
Vel Satis 1051

RE-AX-3760
DACIA
Logan 251
Sandero 255

RE-AX-3851
NISSAN
Kubistar 815
RENAULT
Clio II - Thalia 997
Kangoo I 1015

RE-AX-4014
RENAULT
Clio II - Thalia 997

RE-AX-4280
OPEL
Arena 865
VAUXHALL
Arena 865

RE-AX-4298
RENAULT
19 991

RE-AX-5087
RENAULT
Twingo I 1047

RE-AX-7020
OPEL
Arena 865
VAUXHALL
Arena 865

RE-AX-7046
RENAULT
Twingo I 1047

RE-AX-7056
RENAULT
Laguna I 1021

RE-AX-7300
RENAULT
Fluence 1011
Kangoo II 1017
Megane III - Scenic III 1039

RE-AX-7303
RENAULT
Laguna III 1025

RE-AX-7756
RENAULT
Megane I - Scenic I 1033

RE-AX-8103
RENAULT
Twingo II 1049
Wind 1053

RE-AX-8765
DACIA
Duster 247

RE-BJ-0471
RENAULT
Espace III - Avantime 1005

RE-BJ-0531
DACIA
1300, 1310 243

RE-BJ-0532
DACIA
1300, 1310 243

RE-BJ-0811
RENAULT
Clio II - Thalia 997
Kangoo I 1015
Megane I - Scenic I 1033

RE-BJ-1040
NISSAN
Interstar 811
OPEL
Movano A 897

...RE-BJ-1040
RENAULT
Master II 1029
VAUXHALL
Movano Mk I 1331

RE-BJ-10478
DACIA
Duster 247

RE-BJ-10718
RENAULT
Megane I - Scenic I 1033

RE-BJ-12595
RENAULT
Latitude [L70_] 1027

RE-BJ-13609
DACIA
Dokker 245
Lodgy 249
Logan II 253
Sandero II 257

RE-BJ-15237
RENAULT
Clio IV 1003

RE-BJ-2094
RENAULT
Megane II - Scenic II 1037

RE-BJ-2098
NISSAN
Interstar 811
OPEL
Movano A 897
RENAULT
Master II 1029
VAUXHALL
Movano Mk I 1331

RE-BJ-2302
NISSAN
Primastar 837
OPEL
Vivaro (08/2001 ->) 913
RENAULT
Espace IV 1007
Laguna II 1023
Trafic II 1045
Vel Satis 1051
VAUXHALL
Vivaro Mk I 1347

RE-BJ-2832
DACIA
Logan 251
Sandero 255
RENAULT
Clio III 1001
Megane II - Scenic II 1037
Modus 1041

RE-BJ-4264
NISSAN
Kubistar 815

...RE-BJ-4264
RENAULT
19 991
Clio I 995
Clio II - Thalia 997
Express - Rapid 1009
Kangoo I 1015
Megane I - Scenic I 1033
Twingo I 1047

RE-BJ-4271
OPEL
Arena 865
VAUXHALL
Arena 865

RE-BJ-7025
RENAULT
Laguna I 1021
Safrane 1043

RE-BJ-7212
RENAULT
Laguna III 1025

RE-BJ-7431
RENAULT
Kangoo II 1017

RE-BJ-7432
RENAULT
Kangoo II 1017

RE-BJ-7762
NISSAN
Primastar 837
OPEL
Vivaro (08/2001 ->) 913
RENAULT
Trafic II 1045
VAUXHALL
Vivaro Mk I 1347

RE-BJ-7905
NISSAN
Interstar 811
OPEL
Movano A 897
RENAULT
Master II 1029
VAUXHALL
Movano Mk I 1331

RE-BJ-7906
NISSAN
Interstar 811
OPEL
Movano A 897
RENAULT
Master II 1029
VAUXHALL
Movano Mk I 1331

RE-BJ-8100
RENAULT
Twingo II 1049

RE-BJ-8336
RENAULT
Fluence 1011
Megane III - Scenic III 1039

RE-DS-0856
RENAULT
Megane I - Scenic I 1033

RE-DS-0857
RENAULT
Megane I - Scenic I 1033

RE-DS-1066
RENAULT
Safrane 1043

RE-DS-1071
RENAULT
Safrane 1043

RE-DS-13249
RENAULT
Megane I - Scenic I 1033

RE-DS-2827
RENAULT
Espace III - Avantime 1005

RE-DS-2828
RENAULT
Espace III - Avantime 1005

RE-DS-7013
RENAULT
19 991

RE-DS-7018
RENAULT
19 991

RE-DS-7022
RENAULT
Express - Rapid 1009

RE-DS-7044
RENAULT
Twingo I 1047

RE-DS-7045
RENAULT
Twingo I 1047

RE-DS-7057
RENAULT
Espace III - Avantime 1005
Laguna I 1021
Safrane 1043

RE-DS-7058
RENAULT
Laguna I 1021

RE-DS-7059
RENAULT
Laguna I 1021

RE-ES-0426
RENAULT
Espace III - Avantime 1005

RE-ES-0427
RENAULT
Espace III - Avantime 1005

RE-ES-0672
NISSAN
Kubistar 815
Micra [K12] (2003 ->) 819
RENAULT
Clio II - Thalia 997
Clio III 1001
Kangoo I 1015
Megane I - Scenic I 1033
Modus 1041
Twingo I 1047
Twingo II 1049
Wind 1053

RE-ES-0673
NISSAN
Kubistar 815
Micra [K12] (2003 ->) 819
RENAULT
Clio II - Thalia 997
Clio III 1001
Kangoo I 1015
Megane I - Scenic I 1033
Modus 1041
Twingo I 1047
Twingo II 1049
Wind 1053

RE-ES-0809
NISSAN
Interstar 811
OPEL
Movano A 897
RENAULT
Master II 1029
VAUXHALL
Movano Mk I 1331

RE-ES-0810
NISSAN
Interstar 811
OPEL
Movano A 897
RENAULT
Master II 1029
VAUXHALL
Movano Mk I 1331

RE-ES-0852
NISSAN
Primastar 837
OPEL
Vivaro (08/2001 ->) 913
RENAULT
Espace IV 1007
Laguna II 1023
Trafic II 1045
Vel Satis 1051
VAUXHALL
Vivaro Mk I 1347

RE-ES-0853
NISSAN
Primastar 837
OPEL
Vivaro (08/2001 ->) 913
RENAULT
Espace IV 1007
Laguna II 1023
Trafic II 1045
Vel Satis 1051
VAUXHALL
Vivaro Mk I 1347

RE-ES-13319
RENAULT
Latitude [L70_] 1027

RE-ES-13320
RENAULT
Latitude [L70_] 1027

RE-ES-13645
RENAULT
Captur 993
Clio IV 1003
Zoe 1055

RE-ES-13646
RENAULT
Captur 993
Clio IV 1003
Zoe 1055

RE-ES-15265
RENAULT
Koleos 1019

RE-ES-15266
RENAULT
Koleos 1019

RE-ES-1562
RENAULT
Clio II - Thalia 997

RE-ES-1563
RENAULT
Clio II - Thalia 997

RE-ES-2092
RENAULT
Clio III 1001
Megane II - Scenic II 1037

RE-ES-2093
RENAULT
Clio III 1001
Megane II - Scenic II 1037

RE-ES-3755
DACIA
Dokker 245
Lodgy 249
Logan 251
Logan II 253
Sandero 255

...RE-ES-3755
Sandero II 257

RE-ES-3756
DACIA
Dokker 245
Lodgy 249
Logan 251
Logan II 253
Sandero 255
Sandero II 257

RE-ES-4256
RENAULT
Express - Rapid 1009

RE-ES-4273
OPEL
Arena 865
VAUXHALL
Arena 865

RE-ES-4289
DACIA
1300, 1310 243

RE-ES-4290
DACIA
1300, 1310 243

RE-ES-7014
RENAULT
19 991

RE-ES-7015
RENAULT
19 991

RE-ES-7023
RENAULT
Safrane 1043

RE-ES-7024
RENAULT
Safrane 1043

RE-ES-7026
RENAULT
Twingo I 1047

RE-ES-7027
RENAULT
Twingo I 1047

RE-ES-7053
RENAULT
Clio I 995
Kangoo I 1015
Megane I - Scenic I 1033

RE-ES-7054
RENAULT
Clio I 995
Kangoo I 1015
Megane I - Scenic I 1033

RE-ES-7060
RENAULT
Laguna I 1021

RE-ES-7061
RENAULT
Laguna I 1021

RE-ES-7301
RENAULT
Laguna III 1025

RE-ES-7302
RENAULT
Laguna III 1025

RE-ES-7306
RENAULT
Kangoo II 1017

RE-ES-7307
RENAULT
Kangoo II 1017

RE-ES-7856
RENAULT
Fluence 1011
Megane III - Scenic III 1039

RE-ES-7861
RENAULT
Fluence 1011
Megane III - Scenic III 1039

RE-ES-8763
DACIA
Duster 247

RE-ES-8764
DACIA
Duster 247

RE-LS-10543
RENAULT
Twingo II 1049

RE-LS-1058
NISSAN
Interstar 811
OPEL
Movano A 897
RENAULT
Master II 1029
VAUXHALL
Movano Mk I 1331

RE-LS-1059
NISSAN
Interstar 811
OPEL
Movano A 897
RENAULT
Master II 1029
VAUXHALL
Movano Mk I 1331

RE-LS-1072
RENAULT
Twingo I 1047

RE-LS-13461
RENAULT
Kangoo I 1015

...RE-LS-13461
Megane I - Scenic I 1033

RE-LS-14775
RENAULT
Latitude [L70_] 1027

RE-LS-14776
RENAULT
Latitude [L70_] 1027

RE-LS-14822
RENAULT
Fluence 1011

RE-LS-2088
RENAULT
Kangoo II 1017
Megane II - Scenic II 1037

RE-LS-2095
NISSAN
Primastar 837
OPEL
Vivaro (08/2001 ->) 913
RENAULT
Clio III 1001
Espace IV 1007
Laguna II 1023
Trafic II 1045
Vel Satis 1051
VAUXHALL
Vivaro Mk I 1347

RE-LS-2100
NISSAN
Micra [K12] (2003 ->) 819
RENAULT
Captur 993
Clio III 1001
Clio IV 1003
Modus 1041
Zoe 1055

RE-LS-3072
RENAULT
Twingo I 1047

RE-LS-4008
RENAULT
Megane I - Scenic I 1033

RE-LS-4439
RENAULT
Vel Satis 1051

RE-LS-5740
DACIA
Logan 251
Sandero 255

RE-LS-7304
RENAULT
Laguna III 1025

RE-LS-7407
RENAULT
Megane II - Scenic II 1037

RE-LS-7977
RENAULT
Megane I - Scenic I 1033

RE-LS-7996
RENAULT
Megane II - Scenic II 1037

RE-LS-7999
RENAULT
Megane III - Scenic III 1039

RE-RK-15000
RENAULT
Megane II - Scenic II 1037

RE-RK-15002
RENAULT
Twingo I 1047

RE-RK-15005
RENAULT
Twingo I 1047

RE-RK-15013
RENAULT
Megane I - Scenic I 1033

RE-RK-15014
RENAULT
Megane I - Scenic I 1033

RE-RK-15015
RENAULT
Clio I 995

RE-RK-15016
RENAULT
Laguna I 1021

RE-RK-15021
RENAULT
Safrane 1043

RE-RK-15022
RENAULT
Safrane 1043

RE-RK-15023
DACIA
Logan 251
Logan II 253
Sandero 255

RE-RK-15024
NISSAN
Kubistar 815
RENAULT
Clio II - Thalia 997
Kangoo I 1015
Kangoo II 1017
Megane I - Scenic I 1033

RE-RK-15025
NISSAN
Kubistar 815
RENAULT
Clio II - Thalia 997

...RE-RK-15025
Kangoo I 1015
Kangoo II 1017

RE-RK-15026
NISSAN
Kubistar 815
RENAULT
Clio II - Thalia 997
Kangoo I 1015
Kangoo II 1017

RE-RK-15027
RENAULT
Safrane 1043

RE-RK-15028
RENAULT
Safrane 1043

RE-RK-15033
RENAULT
Clio II - Thalia 997

RE-RK-15039
RENAULT
Fluence 1011
Megane III - Scenic III 1039

RE-RK-15040
RENAULT
Kangoo II 1017

RE-RK-15066
NISSAN
Micra [K12] (2003 ->) 819
RENAULT
Clio III 1001
Modus 1041

RE-RK-15067
RENAULT
Laguna II 1023

RE-RK-15068
RENAULT
Espace IV 1007
Vel Satis 1051

RE-RK-15248
RENAULT
Clio II - Thalia 997

RE-RK-7332
RENAULT
Laguna II 1023

RE-SB-0296
RENAULT
Megane I - Scenic I 1033

RE-SB-0540
RENAULT
Clio I 995

RE-SB-10172
FORD
Fiesta IV (1995 -> 2001) - Fiesta Van / Courier (1996 ->) 365

MOOG

...RE-SB-10172

RENAULT

Laguna I	1021
Megane I - Scenic I	1033

RE-SB-10477

DACIA

Duster	247

RE-SB-10481

DACIA

Duster	247

RE-SB-10541

RENAULT

Twingo II	1049
Wind	1053

RE-SB-10542

RENAULT

Laguna III	1025

RE-SB-10801

RENAULT

Espace IV	1007

RE-SB-10802

RENAULT

Megane II - Scenic II	1037

RE-SB-10803

RENAULT

Megane III - Scenic III	1039

RE-SB-10843

RENAULT

Kangoo II	1017

RE-SB-10845

RENAULT

Laguna III	1025

RE-SB-10846

RENAULT

Laguna III	1025

RE-SB-10929

OPEL

Movano A	897

RENAULT

Master II	1029

VAUXHALL

Movano Mk I	1331

RE-SB-1166

NISSAN

Kubistar	815

RENAULT

19	991
Clio I	995
Clio II - Thalia	997
Clio III	1001
Kangoo I	1015
Megane I - Scenic I	1033
Megane II - Scenic II	1037

RE-SB-1167

NISSAN

Kubistar	815

...RE-SB-1167

RENAULT

Clio I	995
Clio II - Thalia	997
Clio III	1001
Kangoo I	1015

RE-SB-12644

RENAULT

Espace IV	1007

RE-SB-13315

RENAULT

Megane III - Scenic III	1039

RE-SB-1332

DACIA

1300, 1310	243

RE-SB-1333

RENAULT

Express - Rapid	1009

RE-SB-1334

RENAULT

19	991
Megane I - Scenic I	1033

RE-SB-1335

RENAULT

Clio I	995

RE-SB-1336

RENAULT

Clio I	995

RE-SB-1337

RENAULT

Twingo I	1047

RE-SB-1338

RENAULT

Twingo I	1047

RE-SB-1339

RENAULT

Laguna I	1021

RE-SB-1340

RENAULT

Espace III - Avantime	1005
Laguna I	1021

RE-SB-1341

RENAULT

Safrane	1043

RE-SB-1342

RENAULT

Safrane	1043

RE-SB-1343

NISSAN

Kubistar	815

RENAULT

Clio II - Thalia	997
Clio III	1001

...RE-SB-1343

Kangoo I	1015
Twingo II	1049

RE-SB-13481

NISSAN

Micra [K12] (2003 ->)	819

RENAULT

Clio III	1001
Megane II - Scenic II	1037
Modus	1041

RE-SB-13600

DACIA

Dokker	245
Lodgy	249
Logan II	253
Sandero II	257

RE-SB-13812

OPEL

Vivaro (08/2001 ->)	913

RENAULT

Trafic II	1045

VAUXHALL

Vivaro Mk I	1347

RE-SB-13831

RENAULT

Laguna III	1025

RE-SB-14598

DACIA

Duster	247

RE-SB-15261

NISSAN

Qashqai II [J11_]	845

RENAULT

Kadjar [HA_, HL_]	1013

RE-SB-15328

RENAULT

Megane III - Scenic III	1039

RE-SB-1694

RENAULT

19	991
Clio I	995
Clio II - Thalia	997
Clio III	1001
Express - Rapid	1009

RE-SB-1719

RENAULT

19	991
Clio I	995
Megane I - Scenic I	1033
Megane II - Scenic II	1037

RE-SB-2199

RENAULT

Megane I - Scenic I	1033

RE-SB-2211

RENAULT

Megane I - Scenic I	1033

RE-SB-2238

RENAULT

Megane I - Scenic I	1033

RE-SB-2830

RENAULT

Espace IV	1007
Laguna II	1023
Vel Satis	1051

RE-SB-2834

NISSAN

Kubistar	815

RENAULT

Clio II - Thalia	997
Clio III	1001
Kangoo I	1015
Megane I - Scenic I	1033

RE-SB-2835

RENAULT

19	991
Clio II - Thalia	997
Clio III	1001
Megane I - Scenic I	1033

RE-SB-2836

RENAULT

Espace IV	1007
Laguna II	1023
Vel Satis	1051

RE-SB-2837

RENAULT

Modus	1041

RE-SB-3746

DACIA

Logan	251
Sandero	255

RE-SB-3758

DACIA

Logan	251
Sandero	255

RE-SB-3820

RENAULT

Megane II - Scenic II	1037

RE-SB-3821

RENAULT

Megane II - Scenic II	1037

RE-SB-3845

NISSAN

Interstar	811

OPEL

Movano A	897

RENAULT

Master II	1029

VAUXHALL

Movano Mk I	1331

RE-SB-3846

NISSAN

Interstar	811

...RE-SB-3846

OPEL
Movano A 897
RENAULT
Master II 1029
VAUXHALL
Movano Mk I 1331

RE-SB-4095

RENAULT
Laguna II 1023

RE-SB-4108

RENAULT
Laguna II 1023

RE-SB-4191

DACIA
Logan 251
Logan II 253
Sandero 255
Sandero II 257

RE-SB-4713

RENAULT
Espace III - Avantime 1005

RE-SB-6670

RENAULT
Espace III - Avantime 1005

RE-SB-6672

RENAULT
19 991

RE-SB-6847

NISSAN
Kubistar 815
RENAULT
Kangoo I 1015

RE-SB-6849

RENAULT
Clio III 1001
Megane II - Scenic II 1037

RE-SB-6850

RENAULT
Laguna II 1023

RE-SB-7205

RENAULT
Twingo I 1047

RE-SB-7354

RENAULT
Twingo I 1047

RE-SB-7433

RENAULT
Kangoo II 1017

RE-SB-7434

RENAULT
Kangoo II 1017

RE-SB-7975

RENAULT
Clio II - Thalia 997

...RE-SB-7975

Clio III 1001
Twingo II 1049
Wind 1053

RE-SB-7985

RENAULT
Kangoo I 1015

RE-SB-8013

RENAULT
Fluence 1011
Megane III - Scenic III 1039

RE-SB-8017

RENAULT
Fluence 1011
Megane III - Scenic III 1039

RE-SB-8332

RENAULT
Laguna III 1025

RE-SB-8333

RENAULT
Laguna III 1025

RE-SB-9030

RENAULT
Kangoo II 1017

RE-SB-9987

RENAULT
Twingo I 1047
Twingo II 1049
Wind 1053

RE-SB-9988

RENAULT
Clio I 995

RE-SB-9989

RENAULT
Express - Rapid 1009

RE-SB-9991

RENAULT
19 991
Megane I - Scenic I 1033

RE-SB-9992

NISSAN
Kubistar 815
RENAULT
Clio II - Thalia 997
Kangoo I 1015

RE-SB-9996

RENAULT
Megane II - Scenic II 1037

RE-SB-9997

RENAULT
Twingo I 1047
Twingo II 1049
Wind 1053

RE-TC-10092

NISSAN
NV400 829

...RE-TC-10092

OPEL
Movano B 899
RENAULT
Master III 1031
VAUXHALL
Movano Mk II 1333

RE-TC-10093

NISSAN
NV400 829
OPEL
Movano B 899
RENAULT
Master III 1031
VAUXHALL
Movano Mk II 1333

RE-TC-10479

DACIA
Duster 247

RE-TC-10480

DACIA
Duster 247

RE-TC-14595

DACIA
Duster 247

RE-TC-14596

DACIA
Duster 247

RE-TC-14597

DACIA
Duster 247

RE-TC-4011

RENAULT
Express - Rapid 1009

RE-TC-4012

RENAULT
Express - Rapid 1009

RE-WP-0226

RENAULT
Laguna I 1021

RE-WP-0227

RENAULT
Laguna I 1021

RE-WP-0228

RENAULT
Twingo I 1047

RE-WP-0229

RENAULT
Twingo I 1047

RE-WP-0338

NISSAN
Kubistar 815
RENAULT
Clio II - Thalia 997

...RE-WP-0338

Kangoo I 1015

RE-WP-0339

NISSAN
Kubistar 815
RENAULT
Clio II - Thalia 997
Kangoo I 1015

RE-WP-0340

RENAULT
Safrane 1043

RE-WP-0341

RENAULT
Safrane 1043

RE-WP-1052

NISSAN
Interstar 811
OPEL
Movano A 897
RENAULT
Master II 1029
VAUXHALL
Movano Mk I 1331

RE-WP-1053

NISSAN
Interstar 811
OPEL
Movano A 897
RENAULT
Master II 1029
VAUXHALL
Movano Mk I 1331

RE-WP-1062

RENAULT
Espace III - Avantime 1005

RE-WP-1063

RENAULT
Espace III - Avantime 1005

RE-WP-12597

RENAULT
Latitude [L70_] 1027

RE-WP-12598

RENAULT
Latitude [L70_] 1027

RE-WP-13607

DACIA
Dokker 245
Lodgy 249
Logan II 253
Sandero II 257

RE-WP-13608

DACIA
Dokker 245
Lodgy 249
Logan II 253

...RE-WP-13608
Sandero II 257

RE-WP-13709
RENAULT
Clio IV 1003
Zoe 1055

RE-WP-13710
RENAULT
Clio IV 1003
Zoe 1055

RE-WP-13765
RENAULT
Kangoo I 1015

RE-WP-13766
RENAULT
Kangoo I 1015

RE-WP-13829
RENAULT
Laguna III 1025

RE-WP-13830
RENAULT
Laguna III 1025

RE-WP-14757
RENAULT
Clio II - Thalia 997

RE-WP-14758
RENAULT
Clio II - Thalia 997

RE-WP-15643
RENAULT
Captur 993

RE-WP-15644
RENAULT
Captur 993

RE-WP-2037
RENAULT
Megane I - Scenic I 1033

RE-WP-2038
RENAULT
Megane I - Scenic I 1033

RE-WP-2089
RENAULT
Captur 993
Megane II - Scenic II 1037

RE-WP-2090
RENAULT
Captur 993
Megane II - Scenic II 1037

RE-WP-2101
RENAULT
Clio III 1001
Modus 1041

RE-WP-2102
RENAULT
Clio III 1001
Modus 1041

RE-WP-2300
RENAULT
Laguna II 1023

RE-WP-2301
RENAULT
Laguna II 1023

RE-WP-3489
RENAULT
Megane II - Scenic II 1037

RE-WP-3490
RENAULT
Megane II - Scenic II 1037

RE-WP-3744
DACIA
Logan 251
Sandero 255

RE-WP-3745
DACIA
Logan 251
Sandero 255

RE-WP-7032
RENAULT
19 991
Megane I - Scenic I 1033

RE-WP-7033
RENAULT
19 991
Megane I - Scenic I 1033

RE-WP-7760
NISSAN
Primastar 837
OPEL
Vivaro (08/2001 ->) 913
RENAULT
Trafic II 1045
VAUXHALL
Vivaro Mk I 1347

RE-WP-7761
NISSAN
Primastar 837
OPEL
Vivaro (08/2001 ->) 913
RENAULT
Trafic II 1045
VAUXHALL
Vivaro Mk I 1347

RE-WP-7903
RENAULT
Kangoo II 1017

RE-WP-7904
RENAULT
Kangoo II 1017

RE-WP-8101
RENAULT
Twingo II 1049

RE-WP-8102
RENAULT
Twingo II 1049

RE-WP-8330
RENAULT
Laguna III 1025

RE-WP-8331
RENAULT
Laguna III 1025

RE-WP-8334
RENAULT
Fluence 1011
Megane III - Scenic III 1039

RE-WP-8335
RENAULT
Fluence 1011
Megane III - Scenic III 1039

RO-AX-2843
MG
MG ZR 751
ROVER
200 (10/1989 ->) - Coupé - Cabriolet [XW - RF] 1065
25 - Streetwise 1057
400 (-> 04/1995) - 400 Tourer 1067

RO-BJ-0361
LAND ROVER
90 - 110 / Defender / Range Rover I 601

RO-BJ-0773
LAND ROVER
Discovery II 603
Range Rover II (07/1994 -> 03/2002) 615

RO-BJ-0779
LAND ROVER
Discovery II 603
Range Rover II (07/1994 -> 03/2002) 615

RO-BJ-104170
HONDA
Accord V (1993 -> 1998) 421
ROVER
600 1071

RO-BJ-1496
LAND ROVER
90 - 110 / Defender / Range Rover I 601

RO-BJ-2022
JAGUAR
XJ - XJS (-> 1997) 513

RO-BJ-3545
ROVER
100 1063

RO-BJ-3546
ROVER
100 1063

RO-BJ-3552
ROVER
100 1063

RO-BJ-3562
MG
MGF 749
ROVER
100 1063

RO-BJ-6596
MG
MGF 749

RO-BJ-6597
MG
MGF 749

RO-ES-0081
ROVER
100 1063

RO-ES-0777
LAND ROVER
Range Rover II (07/1994 -> 03/2002) 615

RO-ES-0778
LAND ROVER
Range Rover II (07/1994 -> 03/2002) 615

RO-ES-1492
LAND ROVER
90 - 110 / Defender / Range Rover I 601
Discovery II 603

RO-ES-1494
LAND ROVER
90 - 110 / Defender / Range Rover I 601

RO-ES-1982
MG
MG ZT 755
ROVER
75 1061

RO-ES-1983
MG
MG ZT 755
ROVER
75 1061

RO-ES-2034
MG
MGF 749

RO-ES-3153
HONDA
Accord V (1993 -> 1998) 421
ROVER
600 1071

RO-ES-3154

HONDA
Accord V (1993 -> 1998) 421
ROVER
600 1071

RO-ES-3411

ROVER
100 1063

RO-ES-3547

MG
MG ZR 751
ROVER
200 (10/1989 ->) - Coupé - Cabriolet [XW - RF] 1065
25 - Streetwise 1057
400 (-> 04/1995) - 400 Tourer 1067

RO-LS-1831

MG
MG ZR 751
ROVER
200 (10/1989 ->) - Coupé - Cabriolet [XW - RF] 1065
25 - Streetwise 1057
400 (-> 04/1995) - 400 Tourer 1067

RO-LS-1984

MG
MG ZT 755
ROVER
75 1061

RO-LS-1985

MG
MG ZT 755
ROVER
75 1061

RO-LS-1986

MG
MG ZT 755
ROVER
75 1061

RO-LS-6600

MG
MGF 749

RO-SB-12584

ROVER
75 1061

RO-SB-12585

ROVER
75 1061

RO-SB-2840

MG
MG ZR 751
ROVER
200 (10/1989 ->) - Coupé - Cabriolet [XW - RF] 1065

...RO-SB-2840

25 - Streetwise 1057
400 (-> 04/1995) - 400 Tourer 1067

RO-SB-2841

ROVER
100 1063

RO-SB-2842

ROVER
100 1063

RO-SB-4251

HONDA
Accord V (1993 -> 1998) 421
ROVER
600 1071

RO-SB-5737

ROVER
75 1061

RO-SB-5738

ROVER
75 1061

RO-TC-3550

MG
MG ZR 751
ROVER
200 (10/1989 ->) - Coupé - Cabriolet [XW - RF] 1065
25 - Streetwise 1057
400 (-> 04/1995) - 400 Tourer 1067

RO-TC-3551

MG
MG ZR 751
ROVER
200 (10/1989 ->) - Coupé - Cabriolet [XW - RF] 1065
25 - Streetwise 1057
400 (-> 04/1995) - 400 Tourer 1067

RO-WP-0504

HONDA
Civic VI (1994 -> 2001) 431
MG
MG ZS 753
ROVER
400 (05/1995 ->) 1069
45 1059

RO-WP-0505

HONDA
Civic VI (1994 -> 2001) 431
MG
MG ZS 753
ROVER
400 (05/1995 ->) 1069
45 1059

RO-WP-1980

MG
MG ZT 755

...RO-WP-1980

ROVER
75 1061

RO-WP-1981

MG
MG ZT 755
ROVER
75 1061

RO-WP-2008

ROVER
100 1063

RO-WP-2009

ROVER
100 1063

RO-WP-6594

MG
MGF 749

RO-WP-6595

MG
MGF 749

SA-AX-7091

SAAB
9-5 1077

SA-AX-7754

SAAB
9-3 II [YS3F] 1075

SA-BJ-10928

SAAB
9-5 1077

SA-ES-4907

OPEL
Astra F 867
SAAB
900 II (1993 ->) 1079
9-3 I [YS3D] 1073
VAUXHALL
Astra Mk III 1301

SA-ES-4910

OPEL
Astra F 867
SAAB
900 II (1993 ->) 1079
9-3 I [YS3D] 1073
VAUXHALL
Astra Mk III 1301

SA-SB-10001

SAAB
9-3 I [YS3D] 1073

SA-SB-10551

SAAB
900 II (1993 ->) 1079
9-3 I [YS3D] 1073

SA-SB-13376

SAAB
900 II (1993 ->) 1079

...SA-SB-13376

9-3 I [YS3D] 1073

SA-SB-6661

SAAB
900 II (1993 ->) 1079

SA-SB-9998

SAAB
9-5 1077

SA-SB-9999

SAAB
900 II (1993 ->) 1079

SA-WP-2844

SAAB
900 II (1993 ->) 1079
9-3 I [YS3D] 1073

SA-WP-2845

SAAB
900 II (1993 ->) 1079
9-3 I [YS3D] 1073

SE-AX-0091

SEAT
Cordoba (09/2002 ->) [6L2] 1095
Ibiza IV (02/2002 ->) [6L1] 1107
SKODA
Fabia I [6Y_] 1135
Roomster / Praktik 1155
VW
Polo (2001 -> 2009) [9N] 1459

SE-LS-2850

SEAT
Cordoba (-> 09/2002) - Cordoba Vario (08/1996 ->) [6K_] 1091
Ibiza II (1993 ->08/1999) [6K1] 1101
Ibiza III (08/1999 ->02/2002) [6K1] 1105
Inca 1111
VW
Caddy II (11/1995 -> 01/2004) [9K_ - 9U_] 1401
Polo Classic - Variant (1995 -> 2001) [6KV] 1463

SE-SB-0100

SEAT
Cordoba (09/2002 ->) [6L2] 1095
Ibiza IV (02/2002 ->) [6L1] 1107
SKODA
Fabia I [6Y_] 1135
Roomster / Praktik 1155
VW
Fox (10/2003 ->) [1Z1 - 1Z3] 1411
Polo (2001 -> 2009) [9N] 1459

SE-SB-0104

SEAT
Cordoba (09/2002 ->) [6L2] 1095

...SE-SB-0104

Ibiza IV (02/2002 ->) [6L1] 1107

SKODA

Fabia I [6Y_] 1135

Roomster / Praktik 1155

VW

Fox (10/2003 ->) [1Z1 - 1Z3] 1411

Polo (2001 -> 2009) [9N] 1459

SK-AX-0064

SKODA

Felicia - Pickup 1141

SK-AX-2851

SKODA

Felicia - Pickup 1141

SK-BJ-0413

AUDI

A2 [8Z0] 23

SEAT

Cordoba (09/2002 ->) [6L2] 1095

Ibiza IV (02/2002 ->) [6L1] 1107

SKODA

Fabia I [6Y_] 1135

Roomster / Praktik 1155

VW

Fox (10/2003 ->) [1Z1 - 1Z3] 1411

Polo (2001 -> 2009) [9N] 1459

SK-BJ-0414

AUDI

A2 [8Z0] 23

SEAT

Cordoba (09/2002 ->) [6L2] 1095

Ibiza IV (02/2002 ->) [6L1] 1107

SKODA

Fabia I [6Y_] 1135

Roomster / Praktik 1155

VW

Fox (10/2003 ->) [1Z1 - 1Z3] 1411

Polo (2001 -> 2009) [9N] 1459

SK-BJ-8223

SKODA

Felicia - Pickup 1141

SK-DS-0415

SEAT

Cordoba (09/2002 ->) [6L2] 1095

Ibiza IV (02/2002 ->) [6L1] 1107

SKODA

Fabia I [6Y_] 1135

Roomster / Praktik 1155

VW

Polo (2001 -> 2009) [9N] 1459

SK-DS-0416

SEAT

Cordoba (09/2002 ->) [6L2] 1095

...SK-DS-0416

Ibiza IV (02/2002 ->) [6L1] 1107

SKODA

Fabia I [6Y_] 1135

Roomster / Praktik 1155

VW

Polo (2001 -> 2009) [9N] 1459

SK-DS-3992

SEAT

Cordoba (09/2002 ->) [6L2] 1095

Ibiza IV (02/2002 ->) [6L1] 1107

SKODA

Fabia I [6Y_] 1135

Roomster / Praktik 1155

VW

Fox (10/2003 ->) [1Z1 - 1Z3] 1411

Polo (2001 -> 2009) [9N] 1459

SK-DS-3993

SEAT

Cordoba (09/2002 ->) [6L2] 1095

Ibiza IV (02/2002 ->) [6L1] 1107

SKODA

Fabia I [6Y_] 1135

Roomster / Praktik 1155

VW

Fox (10/2003 ->) [1Z1 - 1Z3] 1411

Polo (2001 -> 2009) [9N] 1459

SK-ES-8222

SKODA

Felicia - Pickup 1141

VW

Caddy II (11/1995 -> 01/2004) [9K_ - 9U_] 1401

SK-SB-14592

DACIA

Duster 247

SK-SB-2852

SKODA

Felicia - Pickup 1141

SK-SB-4031

SKODA

Felicia - Pickup 1141

SK-SB-4034

SKODA

Felicia - Pickup 1141

SK-WP-0662

SKODA

Felicia - Pickup 1141

SK-WP-0663

SKODA

Felicia - Pickup 1141

SU-AX-10838

SUBARU

Forester (01/2008 ->) [SH] 1177

SU-AX-14768

SUBARU

Legacy I, II & III - Outback I 1185

SU-AX-2866

SUBARU

Impreza (-> 2007) 1179

Legacy I, II & III - Outback I 1185

SU-AX-2869

SUBARU

Legacy I, II & III - Outback I 1185

SU-AX-7907

SUBARU

Forester (-> 2008) 1175

Impreza (-> 2007) 1179

Legacy IV - Outback II 1187

SU-BJ-104141

SUBARU

Forester (-> 2008) 1175

Forester (01/2008 ->) [SH] 1177

Impreza (-> 2007) 1179

Legacy I, II & III - Outback I 1185

Legacy IV - Outback II 1187

SU-BJ-104197

SUBARU

Justy I & II 1181

SU-ES-2870

SUBARU

Forester (-> 2008) 1175

Forester (01/2008 ->) [SH] 1177

Impreza (-> 2007) 1179

Legacy I, II & III - Outback I 1185

Legacy IV - Outback II 1187

SU-ES-3076

SUBARU

Justy I & II 1181

SU-LS-13523

SUBARU

Forester (01/2008 ->) [SH] 1177

SU-LS-4118

SUBARU

Legacy I, II & III - Outback I 1185

SU-LS-7902

SUBARU

Forester (-> 2008) 1175

Impreza (-> 2007) 1179

Legacy IV - Outback II 1187

SU-LS-7940

SUBARU

Forester (-> 2008) 1175

Impreza (-> 2007) 1179

SU-LS-7988

SUBARU

Legacy I, II & III - Outback I 1185

Legacy IV - Outback II 1187

SU-LS-8902

SUBARU

Forester (-> 2008) 1175

Legacy I, II & III - Outback I 1185

SU-SB-10002

SUBARU

Forester (-> 2008) 1175

Impreza (-> 2007) 1179

Legacy I, II & III - Outback I 1185

Legacy IV - Outback II 1187

SU-SB-10003

SUBARU

Forester (-> 2008) 1175

Impreza (-> 2007) 1179

SU-SB-10010

SUBARU

Legacy IV - Outback II 1187

SU-SB-14671

SUBARU

Forester (-> 2008) 1175

Impreza (-> 2007) 1179

Legacy I, II & III - Outback I 1185

SU-SB-14935

SUBARU

Impreza (-> 2007) 1179

SU-SB-14936

SUBARU

Impreza (-> 2007) 1179

SZ-AX-10544

SUZUKI

Ignis I 1203

SZ-AX-2872

SUZUKI

Grand Vitara I 1199

SZ-AX-2875

SUZUKI

Baleno [EG] 1195

SZ-AX-2886

SUZUKI

Wagon R+ 1219

SZ-AX-2891

SUZUKI

Carry (03/1999 ->) 1197

Jimny 1207

Wagon R+ 1219

SZ-AX-5082

OPEL

Agila II 861

SUZUKI

Splash 1211

Swift III 1213

VAUXHALL

Agila II 861

SZ-AX-7319

SUZUKI

Grand Vitara II 1201

SZ-BJ-0608
SUZUKI
Vitara 1217

SZ-BJ-5080
OPEL
Agila II 861
SUZUKI
Splash 1211
Swift III 1213
VAUXHALL
Agila II 861

SZ-DL-4441
SUZUKI
Vitara 1217

SZ-ES-0103
SUZUKI
Vitara 1217

SZ-ES-0613
SUZUKI
Vitara 1217

SZ-ES-0765
SUZUKI
Alto I, II & III (-> 06/2002) 1189
Alto IV [FF] 1191

SZ-ES-2292
OPEL
Agila I 859
SUZUKI
Ignis II 1205
Wagon R+ 1219
VAUXHALL
Agila I 859

SZ-ES-2610
SUZUKI
Baleno [EG] 1195
Liana 1209

SZ-ES-2884
SUZUKI
Jimny 1207

SZ-ES-2885
SUZUKI
Jimny 1207

SZ-ES-2887
SUZUKI
Grand Vitara I 1199

SZ-ES-2888
SUZUKI
Grand Vitara I 1199

SZ-ES-2894
SUZUKI
Carry (03/1999 ->) 1197

SZ-ES-3889
SUZUKI
Carry (03/1999 ->) 1197

SZ-ES-7347
SUZUKI
Grand Vitara II 1201

SZ-ES-8478
NISSAN
Pixo 835
OPEL
Agila II 861
SUZUKI
Alto V [GF] 1193
Splash 1211
Swift III 1213
VAUXHALL
Agila II 861

SZ-LS-10095
SUZUKI
Grand Vitara I 1199
Vitara 1217

SZ-LS-10106
SUZUKI
Jimny 1207

SZ-LS-5081
OPEL
Agila II 861
SUZUKI
Splash 1211
Swift III 1213
VAUXHALL
Agila II 861

SZ-LS-5614
SUZUKI
Baleno [EG] 1195
Liana 1209

SZ-LS-5615
SUZUKI
Baleno [EG] 1195
Liana 1209

SZ-LS-7318
SUZUKI
Grand Vitara II 1201

SZ-LS-7944
SUZUKI
Carry (03/1999 ->) 1197

SZ-SB-0458
SUZUKI
Baleno [EG] 1195

SZ-SB-10004
SUZUKI
Alto I, II & III (-> 06/2002) 1189
Wagon R+ 1219

SZ-SB-10011
SUZUKI
Baleno [EG] 1195

SZ-SB-10012
SUZUKI
Baleno [EG] 1195

SZ-SB-10013
SUZUKI
Baleno [EG] 1195
Liana 1209

SZ-SB-12583
SUZUKI
Alto I, II & III (-> 06/2002) 1189
Alto V [GF] 1193
Ignis I 1203
Wagon R+ 1219

SZ-SB-2960
CHEVROLET
Matiz 157
DAEWOO
Matiz 157
Tico 279
SUZUKI
Alto I, II & III (-> 06/2002) 1189
Ignis I 1203

SZ-SB-5085
OPEL
Agila II 861
SUZUKI
Splash 1211
Swift III 1213
VAUXHALL
Agila II 861

SZ-SB-5086
OPEL
Agila II 861
SUZUKI
Splash 1211
Swift III 1213
VAUXHALL
Agila II 861

SZ-SB-6726
SUZUKI
Baleno [EG] 1195

SZ-SB-7351
SUZUKI
Grand Vitara II 1201

SZ-TC-10107
SUZUKI
Alto IV [FF] 1191

SZ-TC-10136
SUZUKI
Jimny 1207

SZ-TC-12571
SUZUKI
Liana 1209

SZ-TC-12572
SUZUKI
Liana 1209

SZ-TC-5611
SUZUKI
Baleno [EG] 1195

SZ-TC-7348
SUZUKI
Grand Vitara II 1201

SZ-TC-7349
SUZUKI
Grand Vitara II 1201

SZ-TC-8879
SUZUKI
Baleno [EG] 1195

SZ-TC-8880
SUZUKI
Baleno [EG] 1195

SZ-WP-2892
SUZUKI
Carry (03/1999 ->) 1197

SZ-WP-2893
SUZUKI
Carry (03/1999 ->) 1197

SZ-WP-2896
SUZUKI
Baleno [EG] 1195

SZ-WP-2897
SUZUKI
Baleno [EG] 1195

SZ-WP-2898
SUZUKI
Grand Vitara I 1199

SZ-WP-2899
SUZUKI
Grand Vitara I 1199

SZ-WP-5083
OPEL
Agila II 861
SUZUKI
Splash 1211
Swift III 1213
VAUXHALL
Agila II 861

SZ-WP-5084
OPEL
Agila II 861
SUZUKI
Splash 1211
Swift III 1213
VAUXHALL
Agila II 861

TO-AX-0619
TOYOTA
Picnic 1265

TO-AX-10446
TOYOTA
RAV 4 II (06/2000 ->) [_A2_] 1277

TO-AX-1280
TOYOTA
Avensis I (-> 2003) [T22] 1223

TO-AX-14616
TOYOTA
Auris 1221

TO-AX-1636
TOYOTA
Corolla (07/1992 -> 01/2002) [E10, E11] 1243

TO-AX-1637
TOYOTA
Paseo 1263

TO-AX-1640
TOYOTA
Corolla (07/1992 -> 01/2002) [E10, E11] 1243
RAV 4 I (-> 06/2000) [_A1_] 1275

TO-AX-1740
TOYOTA
Yaris I 1285

TO-AX-2975
TOYOTA
Corolla (01/2002 ->) [E12] 1245
Corolla (09/2006 ->) [_E14_, _E15_] 1247

TO-AX-2979
TOYOTA
Corolla Verso (-> 04/2004) [_E12_] 1249

TO-AX-2982
TOYOTA
Avensis Verso 1229

TO-AX-2994
TOYOTA
RAV 4 II (06/2000 ->) [_A2_] 1277

TO-AX-2999
TOYOTA
Celica (11/1999 ->) [T23] 1241

TO-AX-3008
TOYOTA
Previa II (08/2000 ->) [_R3_] 1269

TO-AX-3014
TOYOTA
Land Cruiser 90 [_J9_] 1257

TO-AX-3015
TOYOTA
Camry (2001 ->) 1235

TO-AX-3018
TOYOTA
Previa I (-> 08/2000) [_R1_, _R2_] 1267

TO-AX-3321
TOYOTA
Camry (1991 -> 2001) 1233

TO-AX-3983
TOYOTA
Land Cruiser 300 [_J12_] 1255

TO-AX-4972
TOYOTA
Avensis II (2003 ->) [T25] 1225

TO-AX-4987
TOYOTA
Land Cruiser 100 [_J1_] 1259

TO-AX-4988
TOYOTA
Land Cruiser 100 [_J1_] 1259

TO-AX-7449
TOYOTA
Yaris II 1287

TO-AX-7874
TOYOTA
Hiace IV 1251

TO-AX-8836
TOYOTA
Hilux (2005 ->) 1253

TO-BJ-0352
TOYOTA
Avensis I (-> 2003) [T22] 1223
Picnic 1265

TO-BJ-0538
TOYOTA
Celica (11/1999 ->) [T23] 1241
Corolla (01/2002 ->) [E12] 1245
Corolla (07/1992 -> 01/2002) [E10, E11] 1243
Corolla Verso (-> 04/2004) [_E12_] 1249
RAV 4 II (06/2000 ->) [_A2_] 1277

TO-BJ-10032
TOYOTA
Hiace IV 1251

TO-BJ-104111
TOYOTA
Celica (11/1993 -> 11/1999) [T20] 1239

TO-BJ-10648
TOYOTA
Avensis III (2009 ->) [ZRT27, ADT27] 1227

TO-BJ-13525
TOYOTA
Prius III (2009 ->) 1271

TO-BJ-1635
TOYOTA
Previa I (-> 08/2000) [_R1_, _R2_] 1267

TO-BJ-1734
TOYOTA
Camry (1991 -> 2001) 1233

TO-BJ-2274
CITROËN
C1 (06/2005 ->) [PM_, PN_] 181
PEUGEOT
107 923
TOYOTA
Aygo 1231
Urban Cruiser 1283
Yaris I 1285
Yaris II 1287
Yaris III 1289

TO-BJ-3001
TOYOTA
Camry (2001 ->) 1235
Previa II (08/2000 ->) [_R3_] 1269

TO-BJ-3002
TOYOTA
Camry (2001 ->) 1235
Previa II (08/2000 ->) [_R3_] 1269

TO-BJ-3009
TOYOTA
Land Cruiser 90 [_J9_] 1257

TO-BJ-3010
TOYOTA
Land Cruiser 90 [_J9_] 1257

TO-BJ-3011
TOYOTA
Land Cruiser 90 [_J9_] 1257

TO-BJ-4108
TOYOTA
RAV 4 I (-> 06/2000) [_A1_] 1275

TO-BJ-4227
TOYOTA
Paseo 1263

TO-BJ-4237
TOYOTA
Paseo 1263

TO-BJ-4974
TOYOTA
Avensis II (2003 ->) [T25] 1225

TO-BJ-4991
TOYOTA
Land Cruiser 100 [_J1_] 1259
Land Cruiser 300 [_J12_] 1255

TO-BJ-4992
TOYOTA
Land Cruiser 100 [_J1_] 1259

TO-BJ-6579
TOYOTA
Auris 1221
Corolla (09/2006 ->) [_E14_, _E15_] 1247

...TO-BJ-6579
RAV 4 IV (12/2012 ->) [_A4_] 1281

TO-BJ-6588
TOYOTA
RAV4 III (03/2006 ->) [_A3_] 1279

TO-BJ-8833
TOYOTA
Hilux (2005 ->) 1253

TO-BJ-8834
TOYOTA
Hilux (2005 ->) 1253

TO-BJ-8972
TOYOTA
Avensis II (2003 ->) [T25] 1225

TO-ES-0230
TOYOTA
Picnic 1265

TO-ES-0231
TOYOTA
Picnic 1265

TO-ES-0374
TOYOTA
Avensis I (-> 2003) [T22] 1223

TO-ES-0375
TOYOTA
Avensis I (-> 2003) [T22] 1223

TO-ES-0509
TOYOTA
MR 2 (2000->) 1261
Paseo 1263

TO-ES-0740
TOYOTA
Yaris I 1285

TO-ES-0741
TOYOTA
Yaris I 1285

TO-ES-10645
TOYOTA
Avensis III (2009 ->) [ZRT27, ADT27] 1227

TO-ES-10646
TOYOTA
Avensis III (2009 ->) [ZRT27, ADT27] 1227

TO-ES-10899
TOYOTA
Prius III (2009 ->) 1271

TO-ES-10900
TOYOTA
Prius III (2009 ->) 1271

TO-ES-13238
TOYOTA
Yaris II 1287

TO-ES-13239
TOYOTA
Yaris II 1287

TO-ES-2382
TOYOTA
Celica (11/1993 -> 11/1999) [T20] 1239
Corolla (07/1992 -> 01/2002) [E10, E11] 1243
RAV 4 I (-> 06/2000) [_A1_] 1275

TO-ES-2977
TOYOTA
Corolla (01/2002 ->) [E12] 1245
Corolla Verso (-> 04/2004) [_E12_] 1249
Urban Cruiser 1283
Yaris II 1287
Yaris III 1289

TO-ES-2978
TOYOTA
Corolla (01/2002 ->) [E12] 1245
Corolla Verso (-> 04/2004) [_E12_] 1249
Urban Cruiser 1283
Yaris II 1287
Yaris III 1289

TO-ES-2986
TOYOTA
Avensis Verso 1229

TO-ES-2987
TOYOTA
Avensis Verso 1229

TO-ES-2990
TOYOTA
RAV 4 II (06/2000 ->) [_A2_] 1277

TO-ES-2991
TOYOTA
RAV 4 II (06/2000 ->) [_A2_] 1277

TO-ES-2997
TOYOTA
Celica (11/1999 ->) [T23] 1241

TO-ES-2998
TOYOTA
Celica (11/1999 ->) [T23] 1241

TO-ES-3006
TOYOTA
Previa II (08/2000 ->) [_R3_] 1269

TO-ES-3007
TOYOTA
Previa II (08/2000 ->) [_R3_] 1269

TO-ES-3016
TOYOTA
Camry (2001 ->) 1235

TO-ES-3017
TOYOTA
Camry (2001 ->) 1235

TO-ES-3024
TOYOTA
Previa I (-> 08/2000) [_R1_, _R2_] 1267

TO-ES-3034
TOYOTA
Previa I (-> 08/2000) [_R1_, _R2_] 1267

TO-ES-3306
TOYOTA
Camry (1991 -> 2001) 1233

TO-ES-4442
TOYOTA
Land Cruiser 100 [_J1_] 1259

TO-ES-4443
TOYOTA
Land Cruiser 100 [_J1_] 1259

TO-ES-4889
TOYOTA
Avensis II (2003 ->) [T25] 1225

TO-ES-4973
TOYOTA
Avensis II (2003 ->) [T25] 1225

TO-ES-4984
TOYOTA
Land Cruiser 90 [_J9_] 1257

TO-ES-4985
TOYOTA
Land Cruiser 90 [_J9_] 1257

TO-ES-4989
TOYOTA
Land Cruiser 100 [_J1_] 1259

TO-ES-4990
TOYOTA
Land Cruiser 100 [_J1_] 1259

TO-ES-4996
TOYOTA
Land Cruiser 300 [_J12_] 1255

TO-ES-5772
TOYOTA
Auris 1221
Corolla (09/2006 ->) [_E14_, _E15_] 1247
Prius Plus [_W4_] 1273

TO-ES-5773
TOYOTA
Auris 1221
Corolla (09/2006 ->) [_E14_, _E15_] 1247
Prius Plus [_W4_] 1273

TO-ES-6582
TOYOTA
RAV 4 IV (12/2012 ->) [_A4_] 1281

...TO-ES-6582
RAV4 III (03/2006 ->) [_A3_] 1279

TO-ES-6583
TOYOTA
RAV 4 IV (12/2012 ->) [_A4_] 1281
RAV4 III (03/2006 ->) [_A3_] 1279

TO-ES-7878
TOYOTA
Hiace IV 1251

TO-ES-8835
TOYOTA
Hilux (2005 ->) 1253

TO-ES-8980
TOYOTA
Hilux (2005 ->) 1253

TO-LS-0376
TOYOTA
Celica (11/1993 -> 11/1999) [T20] 1239
Corolla (07/1992 -> 01/2002) [E10, E11] 1243
RAV 4 I (-> 06/2000) [_A1_] 1275

TO-LS-10549
TOYOTA
Hilux (2005 ->) 1253

TO-LS-10650
TOYOTA
Avensis I (-> 2003) [T22] 1223

TO-LS-10681
TOYOTA
Hiace IV 1251

TO-LS-10757
TOYOTA
Hilux (2005 ->) 1253

TO-LS-1146
TOYOTA
Celica (11/1993 -> 11/1999) [T20] 1239
Corolla (07/1992 -> 01/2002) [E10, E11] 1243

TO-LS-1187
TOYOTA
Avensis I (-> 2003) [T22] 1223
Picnic 1265

TO-LS-1191
TOYOTA
Avensis I (-> 2003) [T22] 1223
Picnic 1265

TO-LS-1663
TOYOTA
Previa I (-> 08/2000) [_R1_, _R2_] 1267

TO-LS-1676
TOYOTA
Previa I (-> 08/2000) [_R1_, _R2_] 1267

TO-LS-2976
TOYOTA
Celica (11/1999 ->) [T23] 1241
Corolla (01/2002 ->) [E12] 1245

TO-LS-2980
TOYOTA
Avensis II (2003 ->) [T25] 1225
Corolla Verso (-> 04/2004) [_E12_] 1249

TO-LS-2983
TOYOTA
Avensis Verso 1229

TO-LS-2993
TOYOTA
RAV 4 II (06/2000 ->) [_A2_] 1277

TO-LS-3000
TOYOTA
Previa II (08/2000 ->) [_R3_] 1269

TO-LS-3367
TOYOTA
Avensis I (-> 2003) [T22] 1223

TO-LS-3984
TOYOTA
Land Cruiser 300 [_J12_] 1255

TO-LS-4120
TOYOTA
Avensis II (2003 ->) [T25] 1225

TO-LS-4128
TOYOTA
Avensis II (2003 ->) [T25] 1225

TO-LS-4157
TOYOTA
Camry (2001 ->) 1235

TO-LS-4159
TOYOTA
Celica (11/1999 ->) [T23] 1241

TO-LS-4166
TOYOTA
MR 2 (2000->) 1261

TO-LS-4167
TOYOTA
RAV 4 II (06/2000 ->) [_A2_] 1277

TO-LS-4168
TOYOTA
RAV 4 II (06/2000 ->) [_A2_] 1277

TO-LS-4291
TOYOTA
Land Cruiser 300 [_J12_] 1255

TO-LS-4709

TOYOTA

Camry (1991 -> 2001) 1233

TO-LS-4710

TOYOTA

Camry (1991 -> 2001) 1233

TO-LS-4733

TOYOTA

Yaris I 1285

TO-LS-4983

TOYOTA

Land Cruiser 90 [_J9_] 1257

TO-LS-4986

TOYOTA

Land Cruiser 90 [_J9_] 1257

TO-LS-4997

TOYOTA

Land Cruiser 300 [_J12_] 1255

TO-LS-5090

TOYOTA

Urban Cruiser 1283

Yaris II 1287

Yaris III 1289

TO-LS-5141

TOYOTA

RAV 4 I (-> 06/2000) [_A1_] 1275

TO-LS-6580

TOYOTA

Auris 1221

Avensis III (2009 ->) [ZRT27, ADT27] 1227

Corolla (09/2006 ->) [_E14_, _E15_] 1247

RAV 4 IV (12/2012 ->) [_A4_] 1281

RAV4 III (03/2006 ->) [_A3_] 1279

TO-LS-6581

TOYOTA

RAV4 III (03/2006 ->) [_A3_] 1279

TO-LS-7869

TOYOTA

Hiace IV 1251

TO-LS-7870

TOYOTA

Hiace IV 1251

TO-LS-8428

TOYOTA

Auris 1221

Avensis III (2009 ->) [ZRT27, ADT27] 1227

TO-LS-8888

TOYOTA

Hilux (2005 ->) 1253

TO-LS-8966

TOYOTA

Land Cruiser 100 [_J1_] 1259

TO-SB-10015

TOYOTA

Camry (2001 ->) 1235

TO-SB-10016

TOYOTA

Celica (11/1999 ->) [T23] 1241

Corolla (01/2002 ->) [E12] 1245

TO-SB-10017

TOYOTA

MR 2 (2000->) 1261

TO-SB-10018

TOYOTA

Avensis I (-> 2003) [T22] 1223

TO-SB-10021

TOYOTA

Camry (1991 -> 2001) 1233

TO-SB-10022

TOYOTA

Camry (1991 -> 2001) 1233

TO-SB-10023

TOYOTA

RAV 4 I (-> 06/2000) [_A1_] 1275

RAV 4 II (06/2000 ->) [_A2_] 1277

TO-SB-10024

TOYOTA

Camry (1991 -> 2001) 1233

Camry (2001 ->) 1235

TO-SB-10026

TOYOTA

Paseo 1263

TO-SB-10027

TOYOTA

Yaris I 1285

TO-SB-10028

TOYOTA

Yaris I 1285

TO-SB-10029

TOYOTA

Yaris I 1285

TO-SB-10031

TOYOTA

RAV 4 I (-> 06/2000) [_A1_] 1275

RAV 4 II (06/2000 ->) [_A2_] 1277

TO-SB-10044

TOYOTA

Paseo 1263

TO-SB-10085

CITROËN

C1 (06/2005 ->) [PM_, PN_] 181

...TO-SB-10085

PEUGEOT

107 923

SUZUKI

Swift III 1213

TOYOTA

Aygo 1231

Urban Cruiser 1283

Yaris II 1287

TO-SB-10097

TOYOTA

Corolla (07/1992 -> 01/2002) [E10, E11] 1243

TO-SB-10127

TOYOTA

RAV 4 IV (12/2012 ->) [_A4_] 1281

RAV4 III (03/2006 ->) [_A3_] 1279

TO-SB-10128

TOYOTA

Urban Cruiser 1283

Yaris II 1287

Yaris III 1289

TO-SB-10129

TOYOTA

Urban Cruiser 1283

Yaris II 1287

Yaris III 1289

TO-SB-10548

TOYOTA

Land Cruiser 300 [_J12_] 1255

TO-SB-10620

TOYOTA

Land Cruiser 300 [_J12_] 1255

TO-SB-10696

TOYOTA

Urban Cruiser 1283

Yaris II 1287

TO-SB-10932

TOYOTA

Avensis II (2003 ->) [T25] 1225

TO-SB-10973

TOYOTA

RAV4 III (03/2006 ->) [_A3_] 1279

TO-SB-10975

TOYOTA

RAV 4 IV (12/2012 ->) [_A4_] 1281

TO-SB-12613

TOYOTA

Avensis II (2003 ->) [T25] 1225

TO-SB-13265

TOYOTA

Land Cruiser 300 [_J12_] 1255

TO-SB-13711

TOYOTA

Yaris I 1285

TO-SB-13791

TOYOTA

Yaris I 1285

TO-SB-13851

TOYOTA

Auris 1221

Corolla (09/2006 ->) [_E14_, _E15_] 1247

Prius III (2009 ->) 1271

TO-SB-13852

TOYOTA

Prius III (2009 ->) 1271

TO-SB-13910

TOYOTA

Auris 1221

Corolla (09/2006 ->) [_E14_, _E15_] 1247

Prius III (2009 ->) 1271

RAV 4 IV (12/2012 ->) [_A4_] 1281

TO-SB-13916

TOYOTA

Avensis III (2009 ->) [ZRT27, ADT27] 1227

TO-SB-13917

TOYOTA

Avensis III (2009 ->) [ZRT27, ADT27] 1227

TO-SB-13969

TOYOTA

Avensis III (2009 ->) [ZRT27, ADT27] 1227

TO-SB-13970

TOYOTA

Avensis III (2009 ->) [ZRT27, ADT27] 1227

TO-SB-14047

TOYOTA

Yaris I 1285

TO-SB-14052

TOYOTA

RAV 4 IV (12/2012 ->) [_A4_] 1281

RAV4 III (03/2006 ->) [_A3_] 1279

TO-SB-14952

TOYOTA

Hiace IV 1251

TO-SB-1938

NISSAN

Almera I (-> 2000) 805

TO-SB-1939

TOYOTA

Corolla (07/1992 -> 01/2002) [E10, E11] 1243

TO-SB-2961
TOYOTA
Corolla (01/2002 ->) [E12] 1245
Corolla Verso (-> 04/2004) [_E12_] 1249

TO-SB-2966
TOYOTA
Avensis II (2003 ->) [T25] 1225
Corolla (01/2002 ->) [E12] 1245
Corolla Verso (-> 04/2004) [_E12_] 1249

TO-SB-4993
TOYOTA
Land Cruiser 100 [_J1_] 1259

TO-SB-4994
TOYOTA
Land Cruiser 100 [_J1_] 1259

TO-SB-4995
TOYOTA
Land Cruiser 100 [_J1_] 1259

TO-SB-5137
TOYOTA
RAV 4 II (06/2000 ->) [_A2_] 1277

TO-SB-5138
TOYOTA
RAV 4 II (06/2000 ->) [_A2_] 1277

TO-SB-6586
TOYOTA
Auris 1221
Corolla (09/2006 ->) [_E14_, _E15_] 1247
Prius III (2009 ->) 1271
Prius Plus [_W4_] 1273
RAV 4 IV (12/2012 ->) [_A4_] 1281
RAV4 III (03/2006 ->) [_A3_] 1279

TO-SB-6587
TOYOTA
RAV4 III (03/2006 ->) [_A3_] 1279

TO-SB-7257
TOYOTA
Avensis I (-> 2003) [T22] 1223

TO-SB-7258
TOYOTA
Avensis I (-> 2003) [T22] 1223

TO-SB-7380
TOYOTA
Yaris I 1285

TO-SB-9700
KIA
Cerato [LD] 537

TO-SB-9702
KIA
Cerato [LD] 537

TO-TC-13949
TOYOTA
Hiace IV 1251

TO-TC-13950
TOYOTA
Hiace IV 1251

TO-TC-14547
TOYOTA
RAV 4 II (06/2000 ->) [_A2_] 1277

TO-TC-14548
TOYOTA
RAV 4 II (06/2000 ->) [_A2_] 1277

TO-WP-0804
TOYOTA
Yaris I 1285

TO-WP-0807
TOYOTA
Yaris I 1285

TO-WP-1074
TOYOTA
RAV 4 I (-> 06/2000) [_A1_] 1275

TO-WP-1075
TOYOTA
RAV 4 I (-> 06/2000) [_A1_] 1275

TO-WP-13253
TOYOTA
Hilux (2005 ->) 1253

TO-WP-13254
TOYOTA
Hilux (2005 ->) 1253

TO-WP-13267
TOYOTA
Hilux (2005 ->) 1253

TO-WP-13268
TOYOTA
Hilux (2005 ->) 1253

TO-WP-13309
TOYOTA
Avensis II (2003 ->) [T25] 1225

TO-WP-13310
TOYOTA
Avensis II (2003 ->) [T25] 1225

TO-WP-13661
TOYOTA
Prius III (2009 ->) 1271

TO-WP-13662
TOYOTA
Prius III (2009 ->) 1271

TO-WP-13667
TOYOTA
Avensis III (2009 ->) [ZRT27, ADT27] 1227

TO-WP-13668
TOYOTA
Avensis III (2009 ->) [ZRT27, ADT27] 1227

TO-WP-15319
TOYOTA
RAV 4 IV (12/2012 ->) [_A4_] 1281

TO-WP-15320
TOYOTA
RAV 4 IV (12/2012 ->) [_A4_] 1281

TO-WP-1709
TOYOTA
Corolla (07/1992 -> 01/2002) [E10, E11] 1243

TO-WP-1758
TOYOTA
Camry (1991 -> 2001) 1233

TO-WP-1798
TOYOTA
Camry (1991 -> 2001) 1233

TO-WP-1951
TOYOTA
Hiace IV 1251

TO-WP-1952
TOYOTA
Hiace IV 1251

TO-WP-2230
TOYOTA
Avensis I (-> 2003) [T22] 1223

TO-WP-2231
TOYOTA
Avensis I (-> 2003) [T22] 1223

TO-WP-2234
TOYOTA
Corolla (01/2002 ->) [E12] 1245
Corolla Verso (-> 04/2004) [_E12_] 1249

TO-WP-2235
TOYOTA
Corolla (01/2002 ->) [E12] 1245
Corolla Verso (-> 04/2004) [_E12_] 1249

TO-WP-2984
TOYOTA
Avensis Verso 1229

TO-WP-2985
TOYOTA
Avensis Verso 1229

TO-WP-2992
TOYOTA
RAV 4 II (06/2000 ->) [_A2_] 1277

TO-WP-3867
TOYOTA
Corolla (07/1992 -> 01/2002) [E10, E11] 1243

TO-WP-4378
TOYOTA
RAV 4 II (06/2000 ->) [_A2_] 1277

TO-WP-4383
TOYOTA
Land Cruiser 100 [_J1_] 1259

TO-WP-4384
TOYOTA
Land Cruiser 100 [_J1_] 1259

TO-WP-4385
TOYOTA
Land Cruiser 100 [_J1_] 1259

TO-WP-4386
TOYOTA
Land Cruiser 100 [_J1_] 1259

TO-WP-4975
TOYOTA
Avensis II (2003 ->) [T25] 1225

TO-WP-4976
TOYOTA
Avensis II (2003 ->) [T25] 1225

TO-WP-5006
TOYOTA
Land Cruiser 300 [_J12_] 1255

TO-WP-5007
TOYOTA
Land Cruiser 300 [_J12_] 1255

TO-WP-6584
TOYOTA
RAV4 III (03/2006 ->) [_A3_] 1279

TO-WP-6585
TOYOTA
RAV4 III (03/2006 ->) [_A3_] 1279

TO-WP-7358
TOYOTA
Camry (1991 -> 2001) 1233
Camry (2001 ->) 1235
Previa II (08/2000 ->) [_R3_] 1269

TO-WP-7359
TOYOTA
Camry (1991 -> 2001) 1233
Camry (2001 ->) 1235
Previa II (08/2000 ->) [_R3_] 1269

TO-WP-7450
TOYOTA
Urban Cruiser 1283
Yaris II 1287
Yaris III 1289

TO-WP-7451
TOYOTA
Urban Cruiser 1283

...TO-WP-7451

Yaris II 1287
Yaris III 1289

TO-WP-8425

TOYOTA
Auris 1221
Corolla (09/2006 ->) [_E14_, _E15_] 1247

TO-WP-8426

TOYOTA
Auris 1221
Corolla (09/2006 ->) [_E14_, _E15_] 1247

VO-AX-0358

FORD
Galaxy I 377
SEAT
Alhambra 1081
VW
Sharan I 1467

VO-AX-0383

VW
Golf III 1413

VO-AX-12501

SEAT
Mii [KF1_] 1123
SKODA
Citigo 1133
VW
Up 1485

VO-AX-12550

SEAT
Cordoba (09/2002 ->) [6L2] 1095
Ibiza IV (02/2002 ->) [6L1] 1107
SKODA
Fabia I [6Y_] 1135
Roomster / Praktik 1155
VW
Fox (10/2003 ->) [1Z1 - 1Z3] 1411
Polo (2001 -> 2009) [9N] 1459

VO-AX-1282

VW
Polo (1994 -> 1999) [6N1 - 6NF] 1455

VO-AX-13381

VW
Beetle 1395
Touran (05/2015 ->) [5T_] 1481

VO-AX-13741

AUDI
A3 (-> 05/2003) [8L1] 25
SEAT
Leon I (-> 2005) [1M1] 1113
Toledo II (04/1999 -> 09/2004) [1M2] 1125

...VO-AX-13741

SKODA
Octavia I (-> 2004) [1U_] 1143
VW
Bora 1397
Golf IV 1415
New beetle 1439

VO-AX-14746

SEAT
Toledo IV (07/2012 ->) [KG3] 1131
SKODA
Fabia III [NJ_] 1139
Rapid [NA2 - NH1 - NH3] 1153
VW
Polo (2009 ->) [6R] 1461

VO-AX-14749

VW
Polo (2009 ->) [6R] 1461

VO-AX-1715

SEAT
Arosa 1089
VW
Lupo 1437
Polo (1994 -> 1999) [6N1 - 6NF] 1455
Polo (1999 -> 2001) [6N2] 1457

VO-AX-1812

SEAT
Arosa 1089
VW
Lupo 1437
Polo (1999 -> 2001) [6N2] 1457

VO-AX-1867

AUDI
A3 (04/2012 ->) [8V_] 33
A3 (05/2003 ->) [8P_] 29
Q3 (06/2011 ->) [8U] 71
SEAT
Alhambra II 1083
Altea 1085
Leon II (09/2005 ->) [1P1] 1117
Leon III (09/2012 ->) [5F_] 1121
Toledo III (10/2004 ->) [5P2] 1127
SKODA
Octavia II (2004 ->) [1Z_] 1147
Octavia III (11/2012 ->) [5E_] 1151
Superb II [3T4 - 3T5] 1159
Yeti 1163
VW
Beetle 1395
Caddy III (03/2004 ->) [2C_ - 2K_] 1403
Eos 1407
Golf V 1419
Golf VI 1423
Golf VII 1427

...VO-AX-1867

Jetta III 1429
Jetta IV 1433
Passat (2005 ->) [3C2 - 3C5] 1447
Scirocco (2008 ->) [137] 1465
Sharan II 1469
Tiguan 1471
Touran (02/2003 -> 05/2015) 1477

VO-AX-2313

VW
Transporter V - Multivan V 1483

VO-AX-2408

AUDI
A2 [8Z0] 23
SKODA
Fabia II [542 - 545] 1137

VO-AX-2409

AUDI
TT (-> 08/2006) [8N3, 8N9] 77

VO-AX-3054

AUDI
Q7 (03/2006 -> 08/2015) [4L] 75
PORSCHE
Cayenne I 987
VW
Touareg I 1473

VO-AX-7107

SEAT
Cordoba (-> 09/2002) - Cordoba Vario (08/1996 ->) [6K_] 1091
Cordoba (09/2002 ->) [6L2] 1095
Ibiza II (1993 ->08/1999) [6K1] 1101
Ibiza III (08/1999 ->02/2002) [6K1] 1105
Ibiza IV (02/2002 ->) [6L1] 1107
SKODA
Fabia I [6Y_] 1135
Roomster / Praktik 1155
VW
Fox (10/2003 ->) [1Z1 - 1Z3] 1411
Polo (2001 -> 2009) [9N] 1459

VO-AX-7138

SEAT
Cordoba (-> 09/2002) - Cordoba Vario (08/1996 ->) [6K_] 1091
Ibiza II (1993 ->08/1999) [6K1] 1101

VO-AX-7181

VW
Golf III 1413

VO-AX-7183

VW
Golf III 1413

VO-AX-8275

SEAT
Arosa 1089
Ibiza III (08/1999 ->02/2002) [6K1] 1105
VW
Polo (1994 -> 1999) [6N1 - 6NF] 1455

VO-AX-8286

AUDI
A3 (-> 05/2003) [8L1] 25
SKODA
Octavia I (-> 2004) [1U_] 1143
VW
Golf IV 1415
New beetle 1439

VO-AX-8291

AUDI
A4 (-> 11/2004) [8D, 8E, 8H, B5, B6] 35
A4 (11/2004 -> 2007) [8EC, 8ED] 41
A6 (1997 -> 2004) [4B, C5] 53
A8 (-> 09/2002) [4D2, 4D8] 63
Allroad (05/2000 -> 08/2005) [4BH, C5] 69
SEAT
Exeo 1097
SKODA
Superb I [3U4] 1157
VW
Passat (1996 -> 2000) [3B2 - 3B5] 1443
Passat (2000 -> 2005) [3B3 - 3B6] 1445

VO-AX-8759

AUDI
A1 (05/2010 ->) [8X_] 21
SEAT
Ibiza V (03/2008 ->) [6J_ - 6P_] 1109
VW
Polo (2009 ->) [6R] 1461

VO-BJ-0319

FORD
Galaxy I 377
SEAT
Alhambra 1081
VW
Sharan I 1467

VO-BJ-13581

AUDI
A3 (04/2012 ->) [8V_] 33
SEAT
Leon III (09/2012 ->) [5F_] 1121
SKODA
Octavia III (11/2012 ->) [5E_] 1151
VW
Golf VII 1427

VO-BJ-13582

AUDI

A3 (04/2012 ->) [8V_] 33

SEAT

Leon III (09/2012 ->) [5F_] 1121

SKODA

Octavia III (11/2012 ->) [5E_] 1151

VW

Golf VII 1427

VO-BJ-13732

VW

Amarok 1393

VO-BJ-13733

VW

Amarok 1393

VO-BJ-1859

AUDI

A3 (05/2003 ->) [8P_] 29

Q3 (06/2011 ->) [8U] 71

SEAT

Altea 1085

Leon II (09/2005 ->) [1P1] 1117

Toledo III (10/2004 ->) [5P2] 1127

SKODA

Octavia II (2004 ->) [1Z_] 1147

Superb II [3T4 - 3T5] 1159

Yeti 1163

VW

Beetle 1395

Caddy III (03/2004 ->) [2C_ - 2K_] 1403

Eos 1407

Golf V 1419

Golf VI 1423

Jetta III 1429

Jetta IV 1433

Scirocco (2008 ->) [137] 1465

Tiguan 1471

Touran (02/2003 -> 05/2015) [1T_] 1477

VO-BJ-1860

AUDI

A3 (05/2003 ->) [8P_] 29

Q3 (06/2011 ->) [8U] 71

SEAT

Altea 1085

Leon II (09/2005 ->) [1P1] 1117

Toledo III (10/2004 ->) [5P2] 1127

SKODA

Octavia II (2004 ->) [1Z_] 1147

Superb II [3T4 - 3T5] 1159

Yeti 1163

VW

Beetle 1395

Caddy III (03/2004 ->) [2C_ - 2K_] 1403

...VO-BJ-1860

Eos 1407

Golf V 1419

Golf VI 1423

Jetta III 1429

Jetta IV 1433

Scirocco (2008 ->) [137] 1465

Tiguan 1471

Touran (02/2003 -> 05/2015) 1477

VO-BJ-1990

VW

Transporter V - Multivan V 1483

VO-BJ-2410

AUDI

A3 (-> 05/2003) [8L1] 25

A3 (05/2003 ->) [8P_] 29

TT (-> 08/2006) [8N3, 8N9] 77

SEAT

Leon I (-> 2005) [1M1] 1113

VW

Golf IV 1415

VO-BJ-5011

SEAT

Alhambra II 1083

VW

Passat (2005 ->) [3C2 - 3C5] 1447

Sharan II 1469

VO-BJ-5012

SEAT

Alhambra II 1083

VW

Passat (2005 ->) [3C2 - 3C5] 1447

Sharan II 1469

VO-BJ-7050

VW

Transporter V - Multivan V 1483

VO-BJ-7154

SEAT

Cordoba (-> 09/2002) - Cordoba Vario (08/1996 ->) [6K_] 1091

Ibiza II (1993 ->08/1999) [6K1] 1101

Ibiza III (08/1999 ->02/2002) [6K1] 1105

Inca 1111

VW

Caddy II (11/1995 -> 01/2004) [9K_ - 9U_] 1401

Golf III 1413

Polo Classic - Variant (1995 -> 2001) [6KV] 1463

VO-BJ-7184

VW

Golf III 1413

VO-BJ-7926

AUDI

A1 (05/2010 ->) [8X_] 21

...VO-BJ-7926

SEAT

Ibiza V (03/2008 ->) [6J_ - 6P_] 1109

Mii [KF1_] 1123

Toledo IV (07/2012 ->) [KG3] 1131

SKODA

Citigo 1133

Fabia II [542 - 545] 1137

Rapid [NA2 - NH1 - NH3] 1153

Roomster / Praktik 1155

VW

Polo (2009 ->) [6R] 1461

Up 1485

VO-BJ-7927

AUDI

A1 (05/2010 ->) [8X_] 21

SEAT

Ibiza V (03/2008 ->) [6J_ - 6P_] 1109

Mii [KF1_] 1123

Toledo IV (07/2012 ->) [KG3] 1131

SKODA

Citigo 1133

Fabia II [542 - 545] 1137

Rapid [NA2 - NH1 - NH3] 1153

Roomster / Praktik 1155

VW

Polo (2009 ->) [6R] 1461

Up 1485

VO-BJ-8248

SEAT

Arosa 1089

VW

Lupo 1437

Polo (1994 -> 1999) [6N1 - 6NF] 1455

Polo (1999 -> 2001) [6N2] 1457

VO-BJ-8249

SEAT

Arosa 1089

VW

Lupo 1437

Polo (1994 -> 1999) [6N1 - 6NF] 1455

Polo (1999 -> 2001) [6N2] 1457

VO-BJ-8287

AUDI

A3 (-> 05/2003) [8L1] 25

SEAT

Leon I (-> 2005) [1M1] 1113

Toledo II (04/1999 -> 09/2004) [1M2] 1125

SKODA

Octavia I (-> 2004) [1U_] 1143

VW

Bora 1397

Golf IV 1415

...VO-BJ-8287

New beetle 1439

VO-BJ-8288

AUDI

A3 (-> 05/2003) [8L1] 25

SEAT

Leon I (-> 2005) [1M1] 1113

Toledo II (04/1999 -> 09/2004) [1M2] 1125

SKODA

Octavia I (-> 2004) [1U_] 1143

VW

Bora 1397

Golf IV 1415

New beetle 1439

VO-DS-1511

SEAT

Cordoba (-> 09/2002) - Cordoba Vario (08/1996 ->) [6K_] 1091

Ibiza II (1993 ->08/1999) [6K1] 1101

Ibiza III (08/1999 ->02/2002) [6K1] 1105

Inca 1111

VW

Caddy II (11/1995 -> 01/2004) [9K_ - 9U_] 1401

Polo Classic - Variant (1995 -> 2001) [6KV] 1463

VO-DS-1512

SEAT

Cordoba (-> 09/2002) - Cordoba Vario (08/1996 ->) [6K_] 1091

Ibiza II (1993 ->08/1999) [6K1] 1101

Ibiza III (08/1999 ->02/2002) [6K1] 1105

Inca 1111

VW

Caddy II (11/1995 -> 01/2004) [9K_ - 9U_] 1401

Polo Classic - Variant (1995 -> 2001) [6KV] 1463

VO-DS-1548

AUDI

A3 (-> 05/2003) [8L1] 25

SEAT

Leon I (-> 2005) [1M1] 1113

Toledo II (04/1999 -> 09/2004) [1M2] 1125

SKODA

Octavia I (-> 2004) [1U_] 1143

VW

Bora 1397

Golf IV 1415

New beetle 1439

VO-DS-1549

AUDI

A3 (-> 05/2003) [8L1] 25

MOOG

...VO-DS-1549

SEAT

Leon I (-> 2005) [1M1] 1113

Toledo II (04/1999 -> 09/2004) [1M2] 1125

SKODA

Octavia I (-> 2004) [1U_] 1143

VW

Bora 1397

Golf IV 1415

New beetle 1439

VO-DS-3535

SEAT

Arosa 1089

VW

Polo (1994 -> 1999) [6N1 - 6NF] 1455

VO-DS-3536

SEAT

Arosa 1089

VW

Polo (1994 -> 1999) [6N1 - 6NF] 1455

VO-DS-7105

SEAT

Cordoba (-> 09/2002) - Cordoba Vario (08/1996 ->) [6K_] 1091

Ibiza II (1993 ->08/1999) [6K1] 1101

Ibiza III (08/1999 ->02/2002) [6K1] 1105

VO-DS-7137

SEAT

Cordoba (-> 09/2002) - Cordoba Vario (08/1996 ->) [6K_] 1091

Ibiza II (1993 ->08/1999) [6K1] 1101

VO-DS-7140

SEAT

Cordoba (-> 09/2002) - Cordoba Vario (08/1996 ->) [6K_] 1091

Ibiza II (1993 ->08/1999) [6K1] 1101

VO-DS-7142

SEAT

Cordoba (-> 09/2002) - Cordoba Vario (08/1996 ->) [6K_] 1091

Ibiza II (1993 ->08/1999) [6K1] 1101

Ibiza III (08/1999 ->02/2002) [6K1] 1105

VO-DS-7180

VW

Golf III 1413

VO-DS-7182

VW

Golf III 1413

VO-DS-7187

VW

Golf III 1413

VO-DS-7190

VW

Golf III 1413

VO-DS-7191

VW

Golf III 1413

VO-DS-7333

SEAT

Cordoba (-> 09/2002) - Cordoba Vario (08/1996 ->) [6K_] 1091

Ibiza II (1993 ->08/1999) [6K1] 1101

Ibiza III (08/1999 ->02/2002) [6K1] 1105

VW

Caddy II (11/1995 -> 01/2004) [9K_ - 9U_] 1401

Polo Classic - Variant (1995 -> 2001) [6KV] 1463

VO-DS-7334

SEAT

Cordoba (-> 09/2002) - Cordoba Vario (08/1996 ->) [6K_] 1091

Ibiza II (1993 ->08/1999) [6K1] 1101

Ibiza III (08/1999 ->02/2002) [6K1] 1105

VW

Caddy II (11/1995 -> 01/2004) [9K_ - 9U_] 1401

Polo Classic - Variant (1995 -> 2001) [6KV] 1463

VO-DS-8204

VW

Golf III 1413

VO-DS-8205

VW

Golf III 1413

VO-DS-8226

AUDI

A4 (-> 11/2004) [8D, 8E, 8H, B5, B6] 35

A6 (1997 -> 2004) [4B, C5] 53

A8 (-> 09/2002) [4D2, 4D8] 63

Allroad (05/2000 -> 08/2005) [4BH, C5] 69

SKODA

Superb I [3U4] 1157

VW

Passat (1996 -> 2000) [3B2 - 3B5] 1443

Passat (2000 -> 2005) [3B3 - 3B6] 1445

VO-DS-8244

SEAT

Arosa 1089

...VO-DS-8244

VW

Polo (1994 -> 1999) [6N1 - 6NF] 1455

VO-DS-8245

SEAT

Arosa 1089

VW

Polo (1994 -> 1999) [6N1 - 6NF] 1455

VO-DS-8256

FORD

Galaxy I 377

SEAT

Alhambra 1081

VW

Sharan I 1467

VO-DS-8257

FORD

Galaxy I 377

SEAT

Alhambra 1081

VW

Sharan I 1467

VO-DS-8281

AUDI

A3 (-> 05/2003) [8L1] 25

SKODA

Octavia I (-> 2004) [1U_] 1143

VW

Golf IV 1415

New beetle 1439

VO-DS-8284

AUDI

A3 (-> 05/2003) [8L1] 25

SKODA

Octavia I (-> 2004) [1U_] 1143

VW

Golf IV 1415

New beetle 1439

VO-ES-0510

SEAT

Arosa 1089

Ibiza III (08/1999 ->02/2002) [6K1] 1105

Inca 1111

VW

Caddy II (11/1995 -> 01/2004) [9K_ - 9U_] 1401

Lupo 1437

Polo (1994 -> 1999) [6N1 - 6NF] 1455

Polo (1999 -> 2001) [6N2] 1457

VO-ES-0511

SEAT

Arosa 1089

Ibiza III (08/1999 ->02/2002) [6K1] 1105

...VO-ES-0511

Inca 1111

VW

Caddy II (11/1995 -> 01/2004) [9K_ - 9U_] 1401

Lupo 1437

Polo (1994 -> 1999) [6N1 - 6NF] 1455

Polo (1999 -> 2001) [6N2] 1457

VO-ES-10703

AUDI

A3 (04/2012 ->) [8V_] 33

A3 (05/2003 ->) [8P_] 29

SEAT

Alhambra II 1083

Altea 1085

Leon II (09/2005 ->) [1P1] 1117

Leon III (09/2012 ->) [5F_] 1121

Toledo III (10/2004 ->) [5P2] 1127

SKODA

Octavia II (2004 ->) [1Z_] 1147

Octavia III (11/2012 ->) [5E_] 1151

Superb II [3T4 - 3T5] 1159

Yeti 1163

VW

Beetle 1395

Caddy III (03/2004 ->) [2C_ - 2K_] 1403

Eos 1407

Golf V 1419

Golf VI 1423

Golf VII 1427

Passat (2005 ->) [3C2 - 3C5] 1447

VO-ES-10704

AUDI

A3 (04/2012 ->) [8V_] 33

A3 (05/2003 ->) [8P_] 29

SEAT

Alhambra II 1083

Altea 1085

Leon II (09/2005 ->) [1P1] 1117

Leon III (09/2012 ->) [5F_] 1121

Toledo III (10/2004 ->) [5P2] 1127

SKODA

Octavia II (2004 ->) [1Z_] 1147

Octavia III (11/2012 ->) [5E_] 1151

Superb II [3T4 - 3T5] 1159

Yeti 1163

VW

Beetle 1395

Caddy III (03/2004 ->) [2C_ - 2K_] 1403

Eos 1407

Golf V 1419

Golf VI 1423

Golf VII 1427

...VO-ES-10704

Passat (2005 ->) [3C2 - 3C5] 1447

VO-ES-13341

SEAT

Mii [KF1_] 1123

SKODA

Citigo 1133

VW

Up 1485

VO-ES-13342

SEAT

Mii [KF1_] 1123

SKODA

Citigo 1133

VW

Up 1485

VO-ES-14747

SEAT

Toledo IV (07/2012 ->) [KG3] 1131

SKODA

Rapid [NA2 - NH1 - NH3] 1153

VW

Polo (2009 ->) [6R] 1461

VO-ES-14748

SEAT

Toledo IV (07/2012 ->) [KG3] 1131

SKODA

Rapid [NA2 - NH1 - NH3] 1153

VW

Polo (2009 ->) [6R] 1461

VO-ES-1506

AUDI

A2 [8Z0] 23

A3 (-> 05/2003) [8L1] 25

SEAT

Leon I (-> 2005) [1M1] 1113

Toledo II (04/1999 -> 09/2004) [1M2] 1125

SKODA

Octavia I (-> 2004) [1U_] 1143

VW

Bora 1397

Golf IV 1415

New beetle 1439

VO-ES-1507

AUDI

A2 [8Z0] 23

A3 (-> 05/2003) [8L1] 25

SEAT

Leon I (-> 2005) [1M1] 1113

Toledo II (04/1999 -> 09/2004) [1M2] 1125

SKODA

Octavia I (-> 2004) [1U_] 1143

...VO-ES-1507

VW

Bora 1397

Golf IV 1415

New beetle 1439

VO-ES-1868

AUDI

A3 (04/2012 ->) [8V_] 33

A3 (05/2003 ->) [8P_] 29

Q3 (06/2011 ->) [8U] 71

SEAT

Alhambra II 1083

Altea 1085

Leon II (09/2005 ->) [1P1] 1117

Leon III (09/2012 ->) [5F_] 1121

Toledo III (10/2004 ->) [5P2] 1127

SKODA

Octavia II (2004 ->) [1Z_] 1147

Octavia III (11/2012 ->) [5E_] 1151

Superb II [3T4 - 3T5] 1159

Yeti 1163

VW

Caddy III (03/2004 ->) [2C_ - 2K_] 1403

Eos 1407

Golf V 1419

Golf VI 1423

Golf VII 1427

Jetta III 1429

Jetta IV 1433

Passat (2010 ->) [362 - 365] 1451

Passat (2005 ->) [3C2 - 3C5] 1447

Scirocco (2008 ->) [137] 1465

Sharan II 1469

Tiguan 1471

Touran (02/2003 -> 05/2015) [1T_] 1477

VO-ES-1869

AUDI

A3 (04/2012 ->) [8V_] 33

A3 (05/2003 ->) [8P_] 29

Q3 (06/2011 ->) [8U] 71

SEAT

Alhambra II 1083

Altea 1085

Leon II (09/2005 ->) [1P1] 1117

Leon III (09/2012 ->) [5F_] 1121

Toledo III (10/2004 ->) [5P2] 1127

SKODA

Octavia II (2004 ->) [1Z_] 1147

Octavia III (11/2012 ->) [5E_] 1151

Superb II [3T4 - 3T5] 1159

Yeti 1163

VW

Caddy III (03/2004 ->) [2C_ - 2K_] 1403

...VO-ES-1869

Eos 1407

Golf V 1419

Golf VI 1423

Golf VII 1427

Jetta III 1429

Jetta IV 1433

Passat (2010 ->) [362 - 365] 1451

Passat (2005 ->) [3C2 - 3C5] 1447

Scirocco (2008 ->) [137] 1465

Sharan II 1469

Tiguan 1471

Touran (02/2003 -> 05/2015) 1477

VO-ES-2314

VW

Transporter V - Multivan V 1483

VO-ES-2315

VW

Transporter V - Multivan V 1483

VO-ES-2404

AUDI

A3 (-> 05/2003) [8L1] 25

TT (-> 08/2006) [8N3, 8N9] 77

SEAT

Leon I (-> 2005) [1M1] 1113

VW

Golf IV 1415

VO-ES-2405

AUDI

A3 (-> 05/2003) [8L1] 25

TT (-> 08/2006) [8N3, 8N9] 77

SEAT

Leon I (-> 2005) [1M1] 1113

VW

Golf IV 1415

VO-ES-3058

AUDI

Q7 (03/2006 -> 08/2015) [4L] 75

PORSCHE

Cayenne I 987

VW

Touareg I 1473

Touareg II 1475

VO-ES-3059

AUDI

Q7 (03/2006 -> 08/2015) [4L] 75

PORSCHE

Cayenne I 987

VW

Touareg I 1473

Touareg II 1475

VO-ES-7106

SEAT

Cordoba (-> 09/2002) - Cordoba Vario (08/1996 ->) [6K_] 1091

...VO-ES-7106

Ibiza II (1993 ->08/1999) [6K1] 1101

Ibiza III (08/1999 ->02/2002) 1105

Inca 1111

VW

Caddy II (11/1995 -> 01/2004) [9K_ - 9U_] 1401

Golf III 1413

Polo Classic - Variant (1995 -> 2001) [6KV] 1463

VO-ES-7139

SEAT

Cordoba (-> 09/2002) - Cordoba Vario (08/1996 ->) [6K_] 1091

Ibiza II (1993 ->08/1999) [6K1] 1101

Ibiza III (08/1999 ->02/2002) [6K1] 1105

Inca 1111

VW

Caddy II (11/1995 -> 01/2004) [9K_ - 9U_] 1401

Golf III 1413

Polo Classic - Variant (1995 -> 2001) [6KV] 1463

VO-ES-8227

AUDI

A4 (-> 11/2004) [8D, 8E, 8H, B5, B6] 35

A6 (1997 -> 2004) [4B, C5] 53

A8 (-> 09/2002) [4D2, 4D8] 63

Allroad (05/2000 -> 08/2005) [4BH, C5] 69

SKODA

Superb I [3U4] 1157

VW

Passat (1996 -> 2000) [3B2 - 3B5] 1443

Passat (2000 -> 2005) [3B3 - 3B6] 1445

VO-ES-8246

SEAT

Arosa 1089

VW

Lupo 1437

Polo (1994 -> 1999) [6N1 - 6NF] 1455

Polo (1999 -> 2001) [6N2] 1457

VO-ES-8247

SEAT

Arosa 1089

VW

Lupo 1437

Polo (1994 -> 1999) [6N1 - 6NF] 1455

Polo (1999 -> 2001) [6N2] 1457

VO-ES-8258

FORD

Galaxy I 377

MOOG

...VO-ES-8258

SEAT
Alhambra 1081
VW
Sharan I 1467

VO-ES-8259

FORD
Galaxy I 377
SEAT
Alhambra 1081
VW
Sharan I 1467

VO-ES-8283

AUDI
A3 (-> 05/2003) [8L1] 25
SKODA
Octavia I (-> 2004) [1U_] 1143
VW
Golf IV 1415
New beetle 1439

VO-ES-8285

AUDI
A3 (-> 05/2003) [8L1] 25
SKODA
Octavia I (-> 2004) [1U_] 1143
VW
Golf IV 1415
New beetle 1439

VO-LS-0157

AUDI
A4 (-> 11/2004) [8D, 8E, 8H, B5, B6] 35
A8 (-> 09/2002) [4D2, 4D8] 63
VW
Passat (1996 -> 2000) [3B2 - 3B5] 1443

VO-LS-0318

FORD
Galaxy I 377
SEAT
Alhambra 1081
VW
Sharan I 1467

VO-LS-0356

AUDI
A4 (-> 11/2004) [8D, 8E, 8H, B5, B6] 35
A6 (1997 -> 2004) [4B, C5] 53
SKODA
Superb I [3U4] 1157
VW
Passat (1996 -> 2000) [3B2 - 3B5] 1443
Passat (2000 -> 2005) [3B3 - 3B6] 1445

VO-LS-0357

AUDI
A4 (-> 11/2004) [8D, 8E, 8H, B5, B6] 35

...VO-LS-0357

A6 (1997 -> 2004) [4B, C5] 53
SKODA
Superb I [3U4] 1157
VW
Passat (1996 -> 2000) [3B2 - 3B5] 1443
Passat (2000 -> 2005) [3B3 - 3B6] 1445

VO-LS-0418

AUDI
A3 (05/2003 ->) [8P_] 29
Q3 (06/2011 ->) [8U] 71
TT (08/2006 -> 06/2014) [8J3, 8J9] 79
SEAT
Alhambra II 1083
Altea 1085
Leon II (09/2005 ->) [1P1] 1117
Toledo III (10/2004 ->) [5P2] 1127
SKODA
Octavia II (2004 ->) [1Z_] 1147
Superb II [3T4 - 3T5] 1159
Yeti 1163
VW
Beetle 1395
Eos 1407
Golf V 1419
Golf VI 1423
Jetta III 1429
Jetta IV 1433
Passat (2005 ->) [3C2 - 3C5] 1447
Scirocco (2008 ->) [137] 1465
Sharan II 1469
Tiguan 1471
Touran (02/2003 -> 05/2015) [1T_] 1477

VO-LS-0456

AUDI
A3 (-> 05/2003) [8L1] 25
TT (-> 08/2006) [8N3, 8N9] 77
SEAT
Leon I (-> 2005) [1M1] 1113
SKODA
Octavia I (-> 2004) [1U_] 1143
VW
Bora 1397
Golf IV 1415

VO-LS-0463

SEAT
Arosa 1089
VW
Lupo 1437
Polo (1994 -> 1999) [6N1 - 6NF] 1455
Polo (1999 -> 2001) [6N2] 1457

VO-LS-0475

AUDI
A3 (-> 05/2003) [8L1] 25

...VO-LS-0475

SEAT
Leon I (-> 2005) [1M1] 1113
Toledo II (04/1999 -> 09/2004) [1M2] 1125
SKODA
Octavia I (-> 2004) [1U_] 1143
VW
Bora 1397
Golf IV 1415
New beetle 1439

VO-LS-0494

AUDI
A1 (05/2010 ->) [8X_] 21
A2 [8Z0] 23
SEAT
Cordoba (09/2002 ->) [6L2] 1095
Ibiza IV (02/2002 ->) [6L1] 1107
Ibiza V (03/2008 ->) [6J_ - 6P_] 1109
Mii [KF1_] 1123
Toledo IV (07/2012 ->) [KG3] 1131
SKODA
Citigo 1133
Fabia I [6Y_] 1135
Fabia II [542 - 545] 1137
Roomster / Praktik 1155
VW
Fox (10/2003 ->) [1Z1 - 1Z3] 1411
Polo (2001 -> 2009) [9N] 1459
Polo (2009 ->) [6R] 1461
Up 1485

VO-LS-0584

AUDI
A3 (05/2003 ->) [8P_] 29
Q3 (06/2011 ->) [8U] 71
TT (08/2006 -> 06/2014) [8J3, 8J9] 79
SEAT
Alhambra II 1083
Altea 1085
Leon II (09/2005 ->) [1P1] 1117
Toledo III (10/2004 ->) [5P2] 1127
SKODA
Octavia II (2004 ->) [1Z_] 1147
Superb II [3T4 - 3T5] 1159
Yeti 1163
VW
Eos 1407
Golf V 1419
Golf VI 1423
Jetta III 1429
Passat (2005 ->) [3C2 - 3C5] 1447
Scirocco (2008 ->) [137] 1465
Sharan II 1469
Tiguan 1471

...VO-LS-0584

Touran (02/2003 -> 05/2015) 1477

VO-LS-10912

PORSCHE
911 - Boxster (1997 ->) 985

VO-LS-13587

PORSCHE
911 - Boxster (1997 ->) 985

VO-LS-13724

VW
Amarok 1393

VO-LS-13744

AUDI
A3 (04/2012 ->) [8V_] 33
TT (07/2014 ->) [FV_] 81
SEAT
Leon III (09/2012 ->) [5F_] 1121
SKODA
Octavia III (11/2012 ->) [5E_] 1151
VW
Golf VII 1427

VO-LS-13833

MERCEDES-BENZ
Sprinter II [906] 741
VW
Crafter (04/2006 ->) [2E_ - 2F_] 1405

VO-LS-13963

AUDI
A3 (04/2012 ->) [8V_] 33
SEAT
Leon III (09/2012 ->) [5F_] 1121
SKODA
Octavia III (11/2012 ->) [5E_] 1151
VW
Golf VII 1427

VO-LS-1516

SEAT
Ibiza II (1993 ->08/1999) [6K1] 1101
VW
Golf III 1413

VO-LS-15462

VW
Amarok 1393

VO-LS-1870

AUDI
A3 (05/2003 ->) [8P_] 29
Q3 (06/2011 ->) [8U] 71
TT (08/2006 -> 06/2014) [8J3, 8J9] 79
SEAT
Alhambra II 1083

...VO-LS-1870

Altea 1085
Leon II (09/2005 ->) [1P1] 1117
Toledo III (10/2004 ->) [5P2] 1127

SKODA

Octavia II (2004 ->) [1Z_] 1147
Superb II [3T4 - 3T5] 1159
Yeti 1163

VW

Beetle 1395
Caddy III (03/2004 ->) [2C_ - 2K_] 1403
Eos 1407
Golf V 1419
Golf VI 1423
Jetta III 1429
Jetta IV 1433
Passat (2010 ->) [362 - 365] 1451
Passat (2005 ->) [3C2 - 3C5] 1447
Scirocco (2008 ->) [137] 1465
Sharan II 1469
Tiguan 1471
Touran (02/2003 -> 05/2015) [1T_] 1477

VO-LS-2205

AUDI

A3 (05/2003 ->) [8P_] 29
Q3 (06/2011 ->) [8U] 71
TT (08/2006 -> 06/2014) [8J3, 8J9] 79

SEAT

Alhambra II 1083
Altea 1085
Leon II (09/2005 ->) [1P1] 1117
Toledo III (10/2004 ->) [5P2] 1127

SKODA

Octavia II (2004 ->) [1Z_] 1147
Superb II [3T4 - 3T5] 1159
Yeti 1163

VW

Eos 1407
Golf V 1419
Golf VI 1423
Jetta III 1429
Passat (2005 ->) [3C2 - 3C5] 1447
Scirocco (2008 ->) [137] 1465
Sharan II 1469
Tiguan 1471
Touran (02/2003 -> 05/2015) [1T_] 1477

VO-LS-2271

AUDI

A4 (-> 11/2004) [8D, 8E, 8H, B5, B6] 35

VO-LS-2311

VW

Transporter V - Multivan V 1483

VO-LS-2406

AUDI

A3 (-> 05/2003) [8L1] 25
TT (-> 08/2006) [8N3, 8N9] 77

SEAT

Leon I (-> 2005) [1M1] 1113

SKODA

Octavia I (-> 2004) [1U_] 1143

VW

Bora 1397
Golf IV 1415

VO-LS-2419

AUDI

A8 (-> 09/2002) [4D2, 4D8] 63

VO-LS-2421

AUDI

A6 (1994 -> 1997) [4A, C4] 51

VO-LS-2422

AUDI

A2 [8Z0] 23

VO-LS-3053

AUDI

Q7 (03/2006 -> 08/2015) [4L] 75

PORSCHE

Cayenne I 987

VW

Touareg I 1473
Touareg II 1475

VO-LS-3353

SEAT

Arosa 1089

VW

Lupo 1437
Polo (1994 -> 1999) [6N1 - 6NF] 1455
Polo (1999 -> 2001) [6N2] 1457

VO-LS-3680

AUDI

A3 (-> 05/2003) [8L1] 25
TT (-> 08/2006) [8N3, 8N9] 77

SEAT

Leon I (-> 2005) [1M1] 1113

SKODA

Octavia I (-> 2004) [1U_] 1143

VW

Bora 1397
Golf IV 1415

VO-LS-3980

VW

Caddy III (03/2004 ->) [2C_ - 2K_] 1403

VO-LS-4397

AUDI

Q7 (03/2006 -> 08/2015) [4L] 75

PORSCHE

Cayenne I 987

...VO-LS-4397

VW

Touareg I 1473
Touareg II 1475

VO-LS-4398

AUDI

Q7 (03/2006 -> 08/2015) [4L] 75

PORSCHE

Cayenne I 987

VW

Touareg I 1473
Touareg II 1475

VO-LS-4916

AUDI

A3 (-> 05/2003) [8L1] 25

SEAT

Leon I (-> 2005) [1M1] 1113
Toledo II (04/1999 -> 09/2004) [1M2] 1125

SKODA

Octavia I (-> 2004) [1U_] 1143

VW

Bora 1397
Golf IV 1415
New beetle 1439

VO-LS-4931

VW

Lupo 1437

VO-LS-6994

SEAT

Cordoba (-> 09/2002) - Cordoba Vario (08/1996 ->) [6K_] 1091
Ibiza II (1993 ->08/1999) [6K1] 1101
Ibiza III (08/1999 ->02/2002) [6K1] 1105

VW

Caddy II (11/1995 -> 01/2004) [9K_ - 9U_] 1401

VO-LS-7327

SEAT

Leon I (-> 2005) [1M1] 1113
Toledo II (04/1999 -> 09/2004) [1M2] 1125

SKODA

Octavia I (-> 2004) [1U_] 1143

VW

Bora 1397
Golf IV 1415
New beetle 1439

VO-LS-8240

AUDI

A8 (-> 09/2002) [4D2, 4D8] 63

VO-RK-1210

FORD

Galaxy I 377

...VO-RK-1210

SEAT

Alhambra 1081

VW

Sharan I 1467

VO-RK-15009

FORD

Galaxy I 377

SEAT

Alhambra 1081

VW

Sharan I 1467

VO-RK-15029

VW

Golf IV 1415

VO-RK-15046

AUDI

A4 (-> 11/2004) [8D, 8E, 8H, B5, B6] 35
A6 (1994 -> 1997) [4A, C4] 51
A6 (1997 -> 2004) [4B, C5] 53
A8 (-> 09/2002) [4D2, 4D8] 63
Allroad (05/2000 -> 08/2005) [4BH, C5] 69

VW

Passat (1996 -> 2000) [3B2 - 3B5] 1443

VO-RK-15049

AUDI

A4 (-> 11/2004) [8D, 8E, 8H, B5, B6] 35
A6 (1994 -> 1997) [4A, C4] 51
A6 (1997 -> 2004) [4B, C5] 53
A8 (-> 09/2002) [4D2, 4D8] 63
Allroad (05/2000 -> 08/2005) [4BH, C5] 69

VO-RK-15050

AUDI

A4 (-> 11/2004) [8D, 8E, 8H, B5, B6] 35
A6 (1997 -> 2004) [4B, C5] 53

VO-RK-15052

AUDI

A3 (-> 05/2003) [8L1] 25

SEAT

Leon I (-> 2005) [1M1] 1113
Toledo II (04/1999 -> 09/2004) [1M2] 1125

SKODA

Octavia I (-> 2004) [1U_] 1143

VW

Bora 1397
Golf IV 1415
New beetle 1439

VO-RK-15053

SEAT

Cordoba (09/2002 ->) [6L2] 1095
Ibiza IV (02/2002 ->) [6L1] 1107

MOOG

...VO-RK-15053

SKODA

Fabia I [6Y_] 1135

VW

Polo (2001 -> 2009) [9N] 1459

VO-RK-15061

SEAT

Leon I (-> 2005) [1M1] 1113

Toledo II (04/1999 -> 09/2004) [1M2] 1125

SKODA

Octavia I (-> 2004) [1U_] 1143

VW

Bora 1397

Golf IV 1415

New beetle 1439

VO-RK-15062

SEAT

Cordoba (09/2002 ->) [6L2] 1095

Ibiza IV (02/2002 ->) [6L1] 1107

SKODA

Fabia I [6Y_] 1135

VW

Polo (2001 -> 2009) [9N] 1459

VO-RK-15064

AUDI

A4 (-> 11/2004) [8D, 8E, 8H, B5, B6] 35

VO-RK-15065

AUDI

A4 (-> 11/2004) [8D, 8E, 8H, B5, B6] 35

VO-RK-15071

AUDI

A3 (04/2012 ->) [8V_] 33

A3 (05/2003 ->) [8P_] 29

Q3 (06/2011 ->) [8U] 71

SEAT

Alhambra II 1083

Altea 1085

Leon II (09/2005 ->) [1P1] 1117

Leon III (09/2012 ->) [5F_] 1121

Toledo III (10/2004 ->) [5P2] 1127

SKODA

Octavia II (2004 ->) [1Z_] 1147

Octavia III (11/2012 ->) [5E_] 1151

Superb II [3T4 - 3T5] 1159

Yeti 1163

VW

Beetle 1395

Caddy III (03/2004 ->) [2C_ - 2K_] 1403

Eos 1407

Golf V 1419

Golf VI 1423

...VO-RK-15071

Golf VII 1427

Jetta III 1429

Jetta IV 1433

Passat (2010 ->) [362 - 365] 1451

Passat (2005 ->) [3C2 - 3C5] 1447

Scirocco (2008 ->) [137] 1465

Sharan II 1469

Tiguan 1471

Touran (02/2003 -> 05/2015) 1477

VO-RK-3953

AUDI

A4 (-> 11/2004) [8D, 8E, 8H, B5, B6] 35

VO-RK-4853

AUDI

A3 (-> 05/2003) [8L1] 25

SEAT

Leon I (-> 2005) [1M1] 1113

Toledo II (04/1999 -> 09/2004) [1M2] 1125

SKODA

Octavia I (-> 2004) [1U_] 1143

VW

Bora 1397

Golf IV 1415

New beetle 1439

VO-RK-4858

AUDI

Q7 (03/2006 -> 08/2015) [4L] 75

PORSCHE

Cayenne I 987

VW

Touareg I 1473

VO-RK-5000

AUDI

A4 (-> 11/2004) [8D, 8E, 8H, B5, B6] 35

A6 (1997 -> 2004) [4B, C5] 53

SKODA

Superb I [3U4] 1157

VW

Passat (1996 -> 2000) [3B2 - 3B5] 1443

Passat (2000 -> 2005) [3B3 - 3B6] 1445

VO-RK-5001

AUDI

A4 (-> 11/2004) [8D, 8E, 8H, B5, B6] 35

A6 (1997 -> 2004) [4B, C5] 53

SKODA

Superb I [3U4] 1157

VW

Passat (1996 -> 2000) [3B2 - 3B5] 1443

...VO-RK-5001

Passat (2000 -> 2005) [3B3 - 3B6] 1445

VO-RK-5002

AUDI

A4 (11/2004 -> 2007) [8EC, 8ED] 41

SEAT

Exeo 1097

VO-RK-6606

AUDI

A3 (05/2003 ->) [8P_] 29

SEAT

Altea 1085

Leon II (09/2005 ->) [1P1] 1117

Toledo III (10/2004 ->) [5P2] 1127

SKODA

Octavia II (2004 ->) [1Z_] 1147

Yeti 1163

VW

Eos 1407

Golf V 1419

Golf VI 1423

Jetta III 1429

Scirocco (2008 ->) [137] 1465

Touran (02/2003 -> 05/2015) [1T_] 1477

VO-RK-7925

AUDI

A4 (-> 11/2004) [8D, 8E, 8H, B5, B6] 35

A6 (1997 -> 2004) [4B, C5] 53

SKODA

Superb I [3U4] 1157

VW

Passat (2000 -> 2005) [3B3 - 3B6] 1445

VO-SB-0042

AUDI

A3 (-> 05/2003) [8L1] 25

TT (-> 08/2006) [8N3, 8N9] 77

SEAT

Cordoba (-> 09/2002) - Cordoba Vario (08/1996 ->) [6K_] 1091

Cordoba (09/2002 ->) [6L2] 1095

Ibiza II (1993 ->08/1999) [6K1] 1101

Ibiza III (08/1999 ->02/2002) [6K1] 1105

Ibiza IV (02/2002 ->) [6L1] 1107

Ibiza V (03/2008 ->) [6J_ - 6P_] 1109

Leon I (-> 2005) [1M1] 1113

Toledo II (04/1999 -> 09/2004) [1M2] 1125

SKODA

Fabia I [6Y_] 1135

...VO-SB-0042

Fabia II [542 - 545] 1137

Octavia I (-> 2004) [1U_] 1143

Roomster / Praktik 1155

VW

Bora 1397

Fox (10/2003 ->) [1Z1 - 1Z3] 1411

Golf IV 1415

New beetle 1439

Polo (1994 -> 1999) [6N1 - 6NF] 1455

Polo (1999 -> 2001) [6N2] 1457

Polo (2001 -> 2009) [9N] 1459

Polo (2009 ->) [6R] 1461

Polo Classic - Variant (1995 -> 2001) [6KV] 1463

VO-SB-0428

AUDI

A3 (05/2003 ->) [8P_] 29

Q3 (06/2011 ->) [8U] 71

TT (08/2006 -> 06/2014) [8J3, 8J9] 79

SEAT

Alhambra II 1083

Altea 1085

Leon II (09/2005 ->) [1P1] 1117

Toledo III (10/2004 ->) [5P2] 1127

SKODA

Octavia II (2004 ->) [1Z_] 1147

Superb II [3T4 - 3T5] 1159

Yeti 1163

VW

Beetle 1395

Caddy III (03/2004 ->) [2C_ - 2K_] 1403

Eos 1407

Golf V 1419

Golf VI 1423

Jetta III 1429

Jetta IV 1433

Passat (2005 ->) [3C2 - 3C5] 1447

Scirocco (2008 ->) [137] 1465

Sharan II 1469

Tiguan 1471

Touran (02/2003 -> 05/2015) [1T_] 1477

VO-SB-0430

AUDI

A3 (05/2003 ->) [8P_] 29

SEAT

Altea 1085

Leon II (09/2005 ->) [1P1] 1117

Toledo III (10/2004 ->) [5P2] 1127

SKODA

Octavia II (2004 ->) [1Z_] 1147

Superb II [3T4 - 3T5] 1159

Yeti 1163

VW

Caddy III (03/2004 ->) [2C_ - 2K_] 1403

...VO-SB-0430

Eos 1407
Golf V 1419
Golf VI 1423
Jetta III 1429
Scirocco (2008 ->) [137] 1465
Touran (02/2003 -> 05/2015) 1477

VO-SB-10052

SEAT
Arosa 1089
VW
Lupo 1437
Polo (1994 -> 1999) [6N1 - 6NF] 1455

VO-SB-10053

AUDI
A3 (-> 05/2003) [8L1] 25
SEAT
Leon I (-> 2005) [1M1] 1113
Toledo II (04/1999 -> 09/2004) [1M2] 1125
SKODA
Octavia I (-> 2004) [1U_] 1143
VW
Bora 1397
Golf IV 1415
New beetle 1439

VO-SB-10056

VW
Golf III 1413

VO-SB-10057

AUDI
A4 (-> 11/2004) [8D, 8E, 8H, B5, B6] 35

VO-SB-10058

SKODA
Felicia - Pickup 1141
VW
Caddy II (11/1995 -> 01/2004) [9K_ - 9U_] 1401

VO-SB-10060

AUDI
A4 (-> 11/2004) [8D, 8E, 8H, B5, B6] 35
A6 (1997 -> 2004) [4B, C5] 53
A8 (-> 09/2002) [4D2, 4D8] 63
Allroad (05/2000 -> 08/2005) [4BH, C5] 69
VW
Passat (1996 -> 2000) [3B2 - 3B5] 1443

VO-SB-10061

FORD
Galaxy I 377
SEAT
Alhambra 1081
Cordoba (-> 09/2002) - Cordoba Vario (08/1996 ->) [6K_] 1091

...VO-SB-10061

Ibiza II (1993 ->08/1999) [6K1] 1101
Ibiza III (08/1999 ->02/2002) 1105
Inca 1111
SKODA
Felicia - Pickup 1141
VW
Golf III 1413
Polo (1994 -> 1999) [6N1 - 6NF] 1455
Polo Classic - Variant (1995 -> 2001) [6KV] 1463
Sharan I 1467

VO-SB-10062

AUDI
A4 (-> 11/2004) [8D, 8E, 8H, B5, B6] 35
A4 (11/2004 -> 2007) [8EC, 8ED] 41
A6 (1997 -> 2004) [4B, C5] 53
A6 (2004 ->2011) [4F2, 4F5, 4FH] 57
SEAT
Exeo 1097
VW
Passat (1996 -> 2000) [3B2 - 3B5] 1443

VO-SB-10063

AUDI
A2 [8Z0] 23
A3 (-> 05/2003) [8L1] 25
TT (-> 08/2006) [8N3, 8N9] 77
SEAT
Leon I (-> 2005) [1M1] 1113
Toledo II (04/1999 -> 09/2004) [1M2] 1125
SKODA
Fabia I [6Y_] 1135
Octavia I (-> 2004) [1U_] 1143
VW
Bora 1397
Golf IV 1415
New beetle 1439

VO-SB-10064

SKODA
Superb I [3U4] 1157
VW
Passat (2000 -> 2005) [3B3 - 3B6] 1445

VO-SB-10065

SKODA
Superb I [3U4] 1157
VW
Passat (2000 -> 2005) [3B3 - 3B6] 1445

VO-SB-10066

AUDI
A3 (05/2003 ->) [8P_] 29

...VO-SB-10066

Q3 (06/2011 ->) [8U] 71
TT (08/2006 -> 06/2014) [8J3, 8J9] 79
SEAT
Altea 1085
Leon II (09/2005 ->) [1P1] 1117
Toledo III (10/2004 ->) [5P2] 1127
SKODA
Octavia II (2004 ->) [1Z_] 1147
Superb II [3T4 - 3T5] 1159
Yeti 1163
VW
Caddy III (03/2004 ->) [2C_ - 2K_] 1403
Eos 1407
Golf V 1419
Golf VI 1423
Jetta III 1429
Passat (2005 ->) [3C2 - 3C5] 1447
Scirocco (2008 ->) [137] 1465
Tiguan 1471
Touran (02/2003 -> 05/2015) [1T_] 1477

VO-SB-10067

FORD
Galaxy I 377
SEAT
Alhambra 1081
Cordoba (-> 09/2002) - Cordoba Vario (08/1996 ->) [6K_] 1091
Ibiza II (1993 ->08/1999) [6K1] 1101
Inca 1111
VW
Caddy II (11/1995 -> 01/2004) [9K_ - 9U_] 1401
Golf III 1413
Polo Classic - Variant (1995 -> 2001) [6KV] 1463
Sharan I 1467

VO-SB-10068

SEAT
Cordoba (-> 09/2002) - Cordoba Vario (08/1996 ->) [6K_] 1091
Cordoba (09/2002 ->) [6L2] 1095
Ibiza III (08/1999 ->02/2002) [6K1] 1105
Ibiza IV (02/2002 ->) [6L1] 1107
SKODA
Fabia I [6Y_] 1135
Roomster / Praktik 1155
VW
Polo (2001 -> 2009) [9N] 1459

VO-SB-10087

VW
Transporter V - Multivan V 1483

VO-SB-10089

VW
Golf VI 1423
Jetta III 1429

VO-SB-10090

AUDI
A3 (05/2003 ->) [8P_] 29
VW
Jetta III 1429

VO-SB-10091

AUDI
A3 (05/2003 ->) [8P_] 29
SKODA
Octavia II (2004 ->) [1Z_] 1147
VW
Passat (2005 ->) [3C2 - 3C5] 1447
Tiguan 1471

VO-SB-10130

AUDI
A3 (-> 05/2003) [8L1] 25
TT (-> 08/2006) [8N3, 8N9] 77
SEAT
Leon I (-> 2005) [1M1] 1113
SKODA
Octavia I (-> 2004) [1U_] 1143
VW
Bora 1397
Golf IV 1415

VO-SB-10131

AUDI
A3 (-> 05/2003) [8L1] 25
TT (-> 08/2006) [8N3, 8N9] 77
SEAT
Leon I (-> 2005) [1M1] 1113
SKODA
Octavia I (-> 2004) [1U_] 1143
VW
Bora 1397
Golf IV 1415

VO-SB-10149

AUDI
A4 (-> 11/2004) [8D, 8E, 8H, B5, B6] 35
A8 (-> 09/2002) [4D2, 4D8] 63
VW
Passat (1996 -> 2000) [3B2 - 3B5] 1443

VO-SB-10179

AUDI
A3 (-> 05/2003) [8L1] 25
TT (-> 08/2006) [8N3, 8N9] 77
SEAT
Leon I (-> 2005) [1M1] 1113
SKODA
Octavia I (-> 2004) [1U_] 1143
VW
Bora 1397

...VO-SB-10179

Golf IV 1415

VO-SB-10550

VW

Transporter V - Multivan V 1483

VO-SB-10574

SEAT

Alhambra II 1083

VW

Passat (2010 ->) [362 - 365] 1451

Passat (2005 ->) [3C2 - 3C5] 1447

Sharan II 1469

VO-SB-10844

VW

Beetle 1395

Caddy III (03/2004 ->) [2C_ - 2K_] 1403

Jetta IV 1433

VO-SB-10877

VW

Transporter V - Multivan V 1483

VO-SB-10878

VW

Transporter V - Multivan V 1483

VO-SB-10957

AUDI

Q7 (03/2006 -> 08/2015) [4L] 75

PORSCHE

Cayenne I 987

VW

Touareg I 1473

VO-SB-10977

AUDI

A4 (-> 11/2004) [8D, 8E, 8H, B5, B6] 35

A4 (11/2004 -> 2007) [8EC, 8ED] 41

A6 (1997 -> 2004) [4B, C5] 53

A6 (2004 ->2011) [4F2, 4F5, 4FH] 57

SEAT

Exeo 1097

VW

Passat (1996 -> 2000) [3B2 - 3B5] 1443

VO-SB-1189

SEAT

Ibiza II (1993 ->08/1999) [6K1] 1101

Ibiza III (08/1999 ->02/2002) [6K1] 1105

VO-SB-1195

FORD

Galaxy I 377

SEAT

Alhambra 1081

...VO-SB-1195

VW

Sharan I 1467

VO-SB-1212

FORD

Galaxy I 377

SEAT

Alhambra 1081

VW

Sharan I 1467

VO-SB-12546

AUDI

Q7 (03/2006 -> 08/2015) [4L] 75

VW

Touareg I 1473

VO-SB-12548

AUDI

A3 (05/2003 ->) [8P_] 29

TT (08/2006 -> 06/2014) [8J3, 8J9] 79

SEAT

Altea 1085

Leon I (-> 2005) [1M1] 1113

Leon II (09/2005 ->) [1P1] 1117

Toledo III (10/2004 ->) [5P2] 1127

SKODA

Octavia II (2004 ->) [1Z_] 1147

Superb II [3T4 - 3T5] 1159

VW

Eos 1407

Golf V 1419

Golf VI 1423

Jetta III 1429

Passat (2005 ->) [3C2 - 3C5] 1447

Tiguan 1471

Touran (02/2003 -> 05/2015) [1T_] 1477

VO-SB-12647

AUDI

Q7 (03/2006 -> 08/2015) [4L] 75

VW

Touareg I 1473

VO-SB-13250

AUDI

A3 (-> 05/2003) [8L1] 25

TT (-> 08/2006) [8N3, 8N9] 77

SEAT

Leon I (-> 2005) [1M1] 1113

Toledo II (04/1999 -> 09/2004) [1M2] 1125

SKODA

Octavia I (-> 2004) [1U_] 1143

VW

Bora 1397

...VO-SB-13250

Golf IV 1415

New beetle 1439

VO-SB-13288

VW

Transporter V - Multivan V 1483

VO-SB-1329

AUDI

A1 (05/2010 ->) [8X_] 21

A3 (-> 05/2003) [8L1] 25

TT (-> 08/2006) [8N3, 8N9] 77

SEAT

Cordoba (-> 09/2002) - Cordoba Vario (08/1996 ->) [6K_] 1091

Ibiza II (1993 ->08/1999) [6K1] 1101

Ibiza III (08/1999 ->02/2002) [6K1] 1105

Ibiza V (03/2008 ->) [6J_ - 6P_] 1109

Inca 1111

Leon I (-> 2005) [1M1] 1113

Mii [KF1_] 1123

Toledo II (04/1999 -> 09/2004) [1M2] 1125

SKODA

Citigo 1133

Fabia II [542 - 545] 1137

Octavia I (-> 2004) [1U_] 1143

Roomster / Praktik 1155

VW

Bora 1397

Caddy II (11/1995 -> 01/2004) [9K_ - 9U_] 1401

Golf III 1413

Golf IV 1415

New beetle 1439

Polo (2009 ->) [6R] 1461

Polo Classic - Variant (1995 -> 2001) [6KV] 1463

Up 1485

VO-SB-13463

SEAT

Alhambra 1081

VW

Sharan I 1467

VO-SB-13464

SEAT

Alhambra 1081

VW

Sharan I 1467

VO-SB-13466

VW

Touareg II 1475

VO-SB-13484

AUDI

A8 (10/2002 -> 07/2010) [4E_] 65

...VO-SB-13484

VW

Phaeton [3D_] 1453

VO-SB-13485

AUDI

A8 (10/2002 -> 07/2010) [4E_] 65

VW

Phaeton [3D_] 1453

VO-SB-13502

AUDI

A6 (1997 -> 2004) [4B, C5] 53

VW

Passat (1996 -> 2000) [3B2 - 3B5] 1443

Passat (2000 -> 2005) [3B3 - 3B6] 1445

VO-SB-13505

AUDI

A6 (1997 -> 2004) [4B, C5] 53

Allroad (05/2000 -> 08/2005) [4BH, C5] 69

VW

Passat (2000 -> 2005) [3B3 - 3B6] 1445

VO-SB-13506

AUDI

A6 (1997 -> 2004) [4B, C5] 53

Allroad (05/2000 -> 08/2005) [4BH, C5] 69

VW

Passat (2000 -> 2005) [3B3 - 3B6] 1445

VO-SB-1358

SEAT

Cordoba (-> 09/2002) - Cordoba Vario (08/1996 ->) [6K_] 1091

Ibiza II (1993 ->08/1999) [6K1] 1101

Ibiza III (08/1999 ->02/2002) [6K1] 1105

Inca 1111

VW

Caddy II (11/1995 -> 01/2004) [9K_ - 9U_] 1401

Golf III 1413

Polo Classic - Variant (1995 -> 2001) [6KV] 1463

VO-SB-13583

VW

Transporter V - Multivan V 1483

VO-SB-1362

AUDI

A4 (-> 11/2004) [8D, 8E, 8H, B5, B6] 35

A4 (11/2004 -> 2007) [8EC, 8ED] 41

A6 (1997 -> 2004) [4B, C5] 53

A8 (-> 09/2002) [4D2, 4D8] 63

...VO-SB-1362

Allroad (05/2000 -> 69

SEAT

Exeo 1097

SKODA

Superb I [3U4] 1157

VW

Passat (1996 -> 2000) [3B2 - 3B5] 1443

Passat (2000 -> 2005) [3B3 - 3B6] 1445

VO-SB-1363

AUDI

A8 (-> 09/2002) [4D2, 4D8] 63

VO-SB-13631

AUDI

A3 (-> 05/2003) [8L1] 25

SEAT

Cordoba (-> 09/2002) - Cordoba Vario (08/1996 ->) [6K_] 1091

Ibiza II (1993 ->08/1999) [6K1] 1101

VO-SB-1364

AUDI

A4 (-> 11/2004) [8D, 8E, 8H, B5, B6] 35

A6 (1997 -> 2004) [4B, C5] 53

A8 (-> 09/2002) [4D2, 4D8] 63

SKODA

Superb I [3U4] 1157

VW

Passat (1996 -> 2000) [3B2 - 3B5] 1443

Passat (2000 -> 2005) [3B3 - 3B6] 1445

VO-SB-1365

AUDI

A4 (-> 11/2004) [8D, 8E, 8H, B5, B6] 35

A4 (11/2004 -> 2007) [8EC, 8ED] 41

A6 (1997 -> 2004) [4B, C5] 53

A8 (-> 09/2002) [4D2, 4D8] 63

SEAT

Exeo 1097

SKODA

Superb I [3U4] 1157

VW

Passat (1996 -> 2000) [3B2 - 3B5] 1443

Passat (2000 -> 2005) [3B3 - 3B6] 1445

VO-SB-13656

AUDI

A3 (04/2012 ->) [8V_] 33

SEAT

Leon III (09/2012 ->) [5F_] 1121

SKODA

Octavia III (11/2012 ->) [5E_] 1151

...VO-SB-13656

VW

Golf VII 1427

VO-SB-1366

AUDI

A4 (-> 11/2004) [8D, 8E, 8H, B5, B6] 35

A6 (1997 -> 2004) [4B, C5] 53

A6 (2004 ->2011) [4F2, 4F5, 4FH] 57

A8 (-> 09/2002) [4D2, 4D8] 63

A8 (10/2002 -> 07/2010) [4E_] 65

SKODA

Superb I [3U4] 1157

VW

Passat (1996 -> 2000) [3B2 - 3B5] 1443

Passat (2000 -> 2005) [3B3 - 3B6] 1445

Phaeton [3D_] 1453

VO-SB-1367

SEAT

Arosa 1089

VW

Lupo 1437

Polo (1994 -> 1999) [6N1 - 6NF] 1455

Polo (1999 -> 2001) [6N2] 1457

VO-SB-1368

SEAT

Arosa 1089

VW

Lupo 1437

Polo (1994 -> 1999) [6N1 - 6NF] 1455

Polo (1999 -> 2001) [6N2] 1457

VO-SB-1369

AUDI

A1 (05/2010 ->) [8X_] 21

A3 (-> 05/2003) [8L1] 25

TT (-> 08/2006) [8N3, 8N9] 77

SEAT

Ibiza V (03/2008 ->) [6J_ - 6P_] 1109

Leon I (-> 2005) [1M1] 1113

Mii [KF1_] 1123

Toledo II (04/1999 -> 09/2004) [1M2] 1125

SKODA

Citigo 1133

Fabia II [542 - 545] 1137

Octavia I (-> 2004) [1U_] 1143

Roomster / Praktik 1155

VW

Bora 1397

Golf IV 1415

New beetle 1439

Polo (2009 ->) [6R] 1461

Up 1485

VO-SB-13717

VW

Transporter V - Multivan V 1483

VO-SB-13719

VW

Transporter V - Multivan V 1483

VO-SB-13731

VW

Amarok 1393

VO-SB-13734

VW

Amarok 1393

VO-SB-13735

VW

Amarok 1393

VO-SB-13736

VW

Amarok 1393

VO-SB-13737

VW

Amarok 1393

VO-SB-13743

AUDI

A3 (04/2012 ->) [8V_] 33

SEAT

Leon III (09/2012 ->) [5F_] 1121

SKODA

Octavia III (11/2012 ->) [5E_] 1151

VW

Golf VII 1427

VO-SB-13843

AUDI

A3 (05/2003 ->) [8P_] 29

TT (08/2006 -> 06/2014) [8J3, 8J9] 79

SEAT

Leon II (09/2005 ->) [1P1] 1117

SKODA

Octavia II (2004 ->) [1Z_] 1147

Superb II [3T4 - 3T5] 1159

Yeti 1163

VW

Beetle 1395

Eos 1407

Golf V 1419

Golf VI 1423

Jetta IV 1433

Scirocco (2008 ->) [137] 1465

Tiguan 1471

VO-SB-14577

AUDI

A1 (05/2010 ->) [8X_] 21

A3 (04/2012 ->) [8V_] 33

SEAT

Leon III (09/2012 ->) [5F_] 1121

...VO-SB-14577

SKODA

Octavia III (11/2012 ->) [5E_] 1151

VW

Golf VII 1427

VO-SB-14578

AUDI

A1 (05/2010 ->) [8X_] 21

A3 (04/2012 ->) [8V_] 33

SEAT

Leon III (09/2012 ->) [5F_] 1121

SKODA

Octavia III (11/2012 ->) [5E_] 1151

VW

Golf VII 1427

VO-SB-14628

AUDI

A3 (-> 05/2003) [8L1] 25

SEAT

Leon I (-> 2005) [1M1] 1113

Toledo II (04/1999 -> 09/2004) [1M2] 1125

SKODA

Octavia I (-> 2004) [1U_] 1143

VW

Bora 1397

Golf IV 1415

VO-SB-14676

AUDI

A4 (-> 11/2004) [8D, 8E, 8H, B5, B6] 35

A4 (11/2004 -> 2007) [8EC, 8ED] 41

SEAT

Exeo 1097

VO-SB-14966

AUDI

A3 (-> 05/2003) [8L1] 25

A4 (-> 11/2004) [8D, 8E, 8H, B5, B6] 35

TT (-> 08/2006) [8N3, 8N9] 77

SEAT

Leon I (-> 2005) [1M1] 1113

Toledo II (04/1999 -> 09/2004) [1M2] 1125

SKODA

Octavia I (-> 2004) [1U_] 1143

VW

Bora 1397

Golf IV 1415

VO-SB-15105

AUDI

A1 (05/2010 ->) [8X_] 21

A3 (05/2003 ->) [8P_] 29

SKODA

Superb II [3T4 - 3T5] 1159

MOOG

...VO-SB-15105

Yeti 1163

VW

Golf V 1419
Golf VI 1423
Jetta III 1429
Passat (2010 ->) [362 - 365] 1451
Tiguan 1471
Touran (02/2003 -> 05/2015) [1T_] 1477

VO-SB-2318

VW

Transporter V - Multivan V 1483

VO-SB-2319

VW

Transporter V - Multivan V 1483

VO-SB-2320

VW

Transporter V - Multivan V 1483

VO-SB-2337

AUDI

A3 (05/2003 ->) [8P_] 29

SEAT

Altea 1085
Leon II (09/2005 ->) [1P1] 1117
Toledo III (10/2004 ->) [5P2] 1127

SKODA

Octavia II (2004 ->) [1Z_] 1147
Superb II [3T4 - 3T5] 1159
Yeti 1163

VW

Caddy III (03/2004 ->) [2C_ - 2K_] 1403
Eos 1407
Golf V 1419
Golf VI 1423
Jetta III 1429
Scirocco (2008 ->) [137] 1465
Touran (02/2003 -> 05/2015) [1T_] 1477

VO-SB-3073

AUDI

Q7 (03/2006 -> 08/2015) [4L] 75

PORSCHE

Cayenne I 987

VW

Touareg I 1473

VO-SB-4169

VW

Golf III 1413

VO-SB-4445

VW

Golf III 1413

VO-SB-4482

SEAT

Arosa 1089

...VO-SB-4482

Cordoba (-> 09/2002) - Cordoba Vario 1091
Ibiza II (1993 ->08/1999) [6K1] 1101
Ibiza III (08/1999 ->02/2002) 1105

VW

Lupo 1437
Polo (1994 -> 1999) [6N1 - 6NF] 1455
Polo (1999 -> 2001) [6N2] 1457
Polo Classic - Variant (1995 -> 2001) [6KV] 1463

VO-SB-4523

AUDI

A3 (-> 05/2003) [8L1] 25

SEAT

Leon I (-> 2005) [1M1] 1113

SKODA

Octavia I (-> 2004) [1U_] 1143

VW

Bora 1397
Golf IV 1415
New beetle 1439

VO-SB-4857

SEAT

Cordoba (09/2002 ->) [6L2] 1095
Ibiza IV (02/2002 ->) [6L1] 1107
Ibiza V (03/2008 ->) [6J_ - 6P_] 1109
Leon I (-> 2005) [1M1] 1113
Toledo II (04/1999 -> 09/2004) [1M2] 1125

SKODA

Fabia I [6Y_] 1135
Octavia I (-> 2004) [1U_] 1143
Roomster / Praktik 1155

VW

Bora 1397
Golf IV 1415
New beetle 1439

VO-SB-4861

SEAT

Cordoba (-> 09/2002) - Cordoba Vario (08/1996 ->) [6K_] 1091
Ibiza II (1993 ->08/1999) [6K1] 1101

VO-SB-4930

AUDI

A3 (05/2003 ->) [8P_] 29

SEAT

Alhambra II 1083
Altea 1085
Leon II (09/2005 ->) [1P1] 1117
Toledo III (10/2004 ->) [5P2] 1127

SKODA

Octavia II (2004 ->) [1Z_] 1147

...VO-SB-4930

Superb II [3T4 - 3T5] 1159
Yeti 1163

VW

Beetle 1395
Eos 1407
Golf V 1419
Golf VI 1423
Jetta III 1429
Jetta IV 1433
Passat (2005 ->) [3C2 - 3C5] 1447
Scirocco (2008 ->) [137] 1465
Sharan II 1469
Tiguan 1471
Touran (02/2003 -> 05/2015) [1T_] 1477

VO-SB-5010

AUDI

Q3 (06/2011 ->) [8U] 71

SEAT

Alhambra II 1083

VW

Passat (2005 ->) [3C2 - 3C5] 1447
Sharan II 1469
Tiguan 1471

VO-SB-5623

AUDI

Q7 (03/2006 -> 08/2015) [4L] 75

PORSCHE

Cayenne I 987

VW

Touareg I 1473

VO-SB-5624

AUDI

Q7 (03/2006 -> 08/2015) [4L] 75

PORSCHE

Cayenne I 987

VW

Touareg I 1473

VO-SB-6725

SEAT

Cordoba (-> 09/2002) - Cordoba Vario (08/1996 ->) [6K_] 1091
Ibiza II (1993 ->08/1999) [6K1] 1101
Ibiza III (08/1999 ->02/2002) [6K1] 1105
Inca 1111
Toledo II (04/1999 -> 09/2004) [1M2] 1125

VW

Caddy II (11/1995 -> 01/2004) [9K_ - 9U_] 1401
Golf III 1413

...VO-SB-6725

Lupo 1437
Polo (1994 -> 1999) [6N1 - 6NF] 1455
Polo (1999 -> 2001) [6N2] 1457
Polo Classic - Variant (1995 -> 2001) [6KV] 1463

VO-SB-6748

AUDI

A4 (-> 11/2004) [8D, 8E, 8H, B5, B6] 35
A4 (11/2004 -> 2007) [8EC, 8ED] 41
A6 (1997 -> 2004) [4B, C5] 53
A8 (-> 09/2002) [4D2, 4D8] 63
A8 (10/2002 -> 07/2010) [4E_] 65

SEAT

Exeo 1097

SKODA

Superb I [3U4] 1157

VW

Passat (1996 -> 2000) [3B2 - 3B5] 1443
Passat (2000 -> 2005) [3B3 - 3B6] 1445

VO-SB-6749

AUDI

A4 (-> 11/2004) [8D, 8E, 8H, B5, B6] 35
A4 (11/2004 -> 2007) [8EC, 8ED] 41
A6 (1994 -> 1997) [4A, C4] 51
A6 (1997 -> 2004) [4B, C5] 53
A6 (2004 ->2011) [4F2, 4F5, 4FH] 57
A8 (-> 09/2002) [4D2, 4D8] 63
A8 (10/2002 -> 07/2010) [4E_] 65
Allroad (05/2000 -> 08/2005) [4BH, C5] 69

SEAT

Exeo 1097

SKODA

Superb I [3U4] 1157

VW

Passat (1996 -> 2000) [3B2 - 3B5] 1443
Passat (2000 -> 2005) [3B3 - 3B6] 1445

VO-SB-6788

SEAT

Cordoba (-> 09/2002) - Cordoba Vario (08/1996 ->) [6K_] 1091
Ibiza III (08/1999 ->02/2002) [6K1] 1105
Inca 1111

VW

Caddy II (11/1995 -> 01/2004) [9K_ - 9U_] 1401
Golf III 1413

VO-SB-6796

AUDI

A3 (-> 05/2003) [8L1] 25

...VO-SB-6796

TT (-> 08/2006) [8N3, 8N9] 77

SEAT

Leon I (-> 2005) [1M1] 1113

Toledo II (04/1999 -> 09/2004) [1M2] 1125

SKODA

Octavia I (-> 2004) [1U_] 1143

VW

Bora 1397

Golf IV 1415

New beetle 1439

VO-SB-6814

FORD

Galaxy I 377

SEAT

Alhambra 1081

VW

Sharan I 1467

VO-SB-6815

FORD

Galaxy I 377

SEAT

Alhambra 1081

VW

Sharan I 1467

VO-SB-6818

AUDI

A3 (-> 05/2003) [8L1] 25

TT (-> 08/2006) [8N3, 8N9] 77

SEAT

Leon I (-> 2005) [1M1] 1113

Toledo II (04/1999 -> 09/2004) [1M2] 1125

SKODA

Octavia I (-> 2004) [1U_] 1143

VW

Bora 1397

Golf IV 1415

New beetle 1439

VO-SB-7147

SEAT

Arosa 1089

VW

Lupo 1437

Polo (1994 -> 1999) [6N1 - 6NF] 1455

Polo (1999 -> 2001) [6N2] 1457

VO-SB-7161

SKODA

Fabia I [6Y_] 1135

VW

Polo (2001 -> 2009) [9N] 1459

VO-SB-7171

SEAT

Altea 1085

Toledo III (10/2004 ->) [5P2] 1127

...VO-SB-7171

VW

Passat (2005 ->) [3C2 - 3C5] 1447

Touran (02/2003 -> 05/2015) [1T_] 1477

VO-SB-7199

AUDI

A3 (05/2003 ->) [8P_] 29

SEAT

Leon II (09/2005 ->) [1P1] 1117

SKODA

Octavia II (2004 ->) [1Z_] 1147

Superb II [3T4 - 3T5] 1159

Yeti 1163

VW

Eos 1407

Golf V 1419

Golf VI 1423

Passat (2005 ->) [3C2 - 3C5] 1447

Scirocco (2008 ->) [137] 1465

Tiguan 1471

VO-SB-7418

SEAT

Cordoba (-> 09/2002) - Cordoba Vario (08/1996 ->) [6K_] 1091

Ibiza II (1993 ->08/1999) [6K1] 1101

Inca 1111

VO-SB-7419

SEAT

Cordoba (09/2002 ->) [6L2] 1095

Ibiza IV (02/2002 ->) [6L1] 1107

Toledo IV (07/2012 ->) [KG3] 1131

SKODA

Fabia I [6Y_] 1135

Rapid [NA2 - NH1 - NH3] 1153

Roomster / Praktik 1155

VW

Fox (10/2003 ->) [1Z1 - 1Z3] 1411

Polo (2001 -> 2009) [9N] 1459

VO-SB-7422

AUDI

A3 (-> 05/2003) [8L1] 25

TT (-> 08/2006) [8N3, 8N9] 77

SKODA

Octavia I (-> 2004) [1U_] 1143

VW

Bora 1397

Golf IV 1415

New beetle 1439

VO-SB-7880

AUDI

A3 (05/2003 ->) [8P_] 29

TT (08/2006 -> 06/2014) [8J3, 8J9] 79

...VO-SB-7880

SEAT

Alhambra II 1083

Altea 1085

Leon II (09/2005 ->) [1P1] 1117

Toledo III (10/2004 ->) [5P2] 1127

SKODA

Octavia II (2004 ->) [1Z_] 1147

Superb II [3T4 - 3T5] 1159

Yeti 1163

VW

Beetle 1395

Eos 1407

Golf V 1419

Golf VI 1423

Jetta III 1429

Jetta IV 1433

Passat (2005 ->) [3C2 - 3C5] 1447

Scirocco (2008 ->) [137] 1465

Sharan II 1469

Tiguan 1471

Touran (02/2003 -> 05/2015) [1T_] 1477

VO-SB-7892

VW

Caddy III (03/2004 ->) [2C_ - 2K_] 1403

VO-SB-7895

AUDI

A1 (05/2010 ->) [8X_] 21

SEAT

Cordoba (09/2002 ->) [6L2] 1095

Ibiza IV (02/2002 ->) [6L1] 1107

Toledo IV (07/2012 ->) [KG3] 1131

SKODA

Fabia I [6Y_] 1135

Rapid [NA2 - NH1 - NH3] 1153

VW

Fox (10/2003 ->) [1Z1 - 1Z3] 1411

Polo (2001 -> 2009) [9N] 1459

VO-SB-7896

AUDI

A2 [8Z0] 23

SEAT

Cordoba (09/2002 ->) [6L2] 1095

Ibiza IV (02/2002 ->) [6L1] 1107

Ibiza V (03/2008 ->) [6J_ - 6P_] 1109

SKODA

Fabia I [6Y_] 1135

Fabia II [542 - 545] 1137

Fabia III [NJ_] 1139

VW

Fox (10/2003 ->) [1Z1 - 1Z3] 1411

...VO-SB-7896

Polo (2001 -> 2009) [9N] 1459

Polo (2009 ->) [6R] 1461

VO-SB-7897

AUDI

Q3 (06/2011 ->) [8U] 71

SEAT

Altea 1085

Leon II (09/2005 ->) [1P1] 1117

SKODA

Octavia II (2004 ->) [1Z_] 1147

VW

Eos 1407

Golf V 1419

Golf VI 1423

Passat (2005 ->) [3C2 - 3C5] 1447

Scirocco (2008 ->) [137] 1465

Tiguan 1471

Touran (02/2003 -> 05/2015) [1T_] 1477

VO-SB-7914

AUDI

A3 (05/2003 ->) [8P_] 29

SEAT

Altea 1085

Leon II (09/2005 ->) [1P1] 1117

Toledo III (10/2004 ->) [5P2] 1127

SKODA

Octavia II (2004 ->) [1Z_] 1147

Superb II [3T4 - 3T5] 1159

VW

Eos 1407

Golf V 1419

Golf VI 1423

Jetta III 1429

Passat (2005 ->) [3C2 - 3C5] 1447

Scirocco (2008 ->) [137] 1465

Touran (02/2003 -> 05/2015) [1T_] 1477

VO-SB-7915

AUDI

A3 (05/2003 ->) [8P_] 29

SEAT

Altea 1085

Leon II (09/2005 ->) [1P1] 1117

Toledo III (10/2004 ->) [5P2] 1127

SKODA

Octavia II (2004 ->) [1Z_] 1147

Superb II [3T4 - 3T5] 1159

Yeti 1163

VW

Eos 1407

Golf V 1419

Golf VI 1423

Jetta III 1429

MOOG

...VO-SB-7915

Passat (2005 ->) [3C2 - 3C5] 1447
Scirocco (2008 ->) [137] 1465
Tiguan 1471
Touran (02/2003 -> 05/2015) 1477

VO-SB-7916

AUDI
A3 (05/2003 ->) [8P_] 29
SEAT
Altea 1085
Leon II (09/2005 ->) [1P1] 1117
Toledo III (10/2004 ->) [5P2] 1127
SKODA
Octavia II (2004 ->) [1Z_] 1147
Superb II [3T4 - 3T5] 1159
VW
Eos 1407
Golf V 1419
Golf VI 1423
Jetta III 1429
Passat (2005 ->) [3C2 - 3C5] 1447
Scirocco (2008 ->) [137] 1465
Touran (02/2003 -> 05/2015) [1T_] 1477

VO-SB-7958

SEAT
Cordoba (-> 09/2002) - Cordoba Vario (08/1996 ->) [6K_] 1091
Ibiza II (1993 ->08/1999) [6K1] 1101
Ibiza III (08/1999 ->02/2002) [6K1] 1105

VO-SB-7978

SEAT
Cordoba (-> 09/2002) - Cordoba Vario (08/1996 ->) [6K_] 1091
Ibiza II (1993 ->08/1999) [6K1] 1101
Ibiza III (08/1999 ->02/2002) [6K1] 1105
VW
Polo (1999 -> 2001) [6N2] 1457
Polo Classic - Variant (1995 -> 2001) [6KV] 1463

VO-SB-8444

AUDI
A3 (05/2003 ->) [8P_] 29
SEAT
Altea 1085
Toledo III (10/2004 ->) [5P2] 1127
SKODA
Octavia II (2004 ->) [1Z_] 1147
Yeti 1163

...VO-SB-8444

VW
Eos 1407
Golf V 1419
Golf VI 1423
Jetta III 1429
Tiguan 1471

VO-SB-8445

AUDI
A6 (1997 -> 2004) [4B, C5] 53
SKODA
Superb I [3U4] 1157
VW
Passat (1996 -> 2000) [3B2 - 3B5] 1443
Passat (2000 -> 2005) [3B3 - 3B6] 1445

VO-SB-8446

AUDI
A6 (1997 -> 2004) [4B, C5] 53
SKODA
Superb I [3U4] 1157
VW
Passat (1996 -> 2000) [3B2 - 3B5] 1443
Passat (2000 -> 2005) [3B3 - 3B6] 1445

VO-SB-8447

AUDI
A1 (05/2010 ->) [8X_] 21
A3 (05/2003 ->) [8P_] 29
TT (08/2006 -> 06/2014) [8J3, 8J9] 79
SEAT
Alhambra II 1083
Altea 1085
SKODA
Octavia II (2004 ->) [1Z_] 1147
Superb II [3T4 - 3T5] 1159
Yeti 1163
VW
Golf V 1419
Passat (2005 ->) [3C2 - 3C5] 1447
Tiguan 1471

VO-SB-8448

AUDI
A1 (05/2010 ->) [8X_] 21
A3 (05/2003 ->) [8P_] 29
TT (08/2006 -> 06/2014) [8J3, 8J9] 79
SEAT
Alhambra II 1083
Altea 1085
SKODA
Octavia II (2004 ->) [1Z_] 1147
Superb II [3T4 - 3T5] 1159
Yeti 1163
VW
Golf V 1419

...VO-SB-8448

Passat (2005 ->) [3C2 - 3C5] 1447
Tiguan 1471

VO-SB-8810

FORD
Galaxy I 377
SEAT
Alhambra 1081
VW
Sharan I 1467

VO-SB-8811

AUDI
A3 (05/2003 ->) [8P_] 29
TT (08/2006 -> 06/2014) [8J3, 8J9] 79
SEAT
Altea 1085
Leon II (09/2005 ->) [1P1] 1117
Toledo III (10/2004 ->) [5P2] 1127
SKODA
Octavia II (2004 ->) [1Z_] 1147
Superb II [3T4 - 3T5] 1159
Yeti 1163
VW
Beetle 1395
Eos 1407
Golf V 1419
Golf VI 1423
Jetta III 1429
Jetta IV 1433
Passat (2005 ->) [3C2 - 3C5] 1447
Scirocco (2008 ->) [137] 1465
Touran (02/2003 -> 05/2015) [1T_] 1477

VO-SB-8812

AUDI
A3 (05/2003 ->) [8P_] 29
SEAT
Altea 1085
Leon II (09/2005 ->) [1P1] 1117
Toledo III (10/2004 ->) [5P2] 1127
SKODA
Octavia II (2004 ->) [1Z_] 1147
Superb II [3T4 - 3T5] 1159
VW
Beetle 1395
Eos 1407
Golf V 1419
Golf VI 1423
Jetta III 1429
Jetta IV 1433
Passat (2005 ->) [3C2 - 3C5] 1447
Scirocco (2008 ->) [137] 1465
Touran (02/2003 -> 05/2015) [1T_] 1477

VO-SB-8813

SEAT
Arosa 1089
VW
Lupo 1437
Polo (1994 -> 1999) [6N1 - 6NF] 1455
Polo (1999 -> 2001) [6N2] 1457

VO-TC-0586

AUDI
A1 (05/2010 ->) [8X_] 21
A3 (05/2003 ->) [8P_] 29
Q3 (06/2011 ->) [8U] 71
TT (08/2006 -> 06/2014) [8J3, 8J9] 79
SEAT
Alhambra II 1083
Altea 1085
Leon II (09/2005 ->) [1P1] 1117
Toledo III (10/2004 ->) [5P2] 1127
SKODA
Octavia II (2004 ->) [1Z_] 1147
Superb II [3T4 - 3T5] 1159
Yeti 1163
VW
Beetle 1395
Eos 1407
Golf V 1419
Golf VI 1423
Jetta III 1429
Jetta IV 1433
Passat (2010 ->) [362 - 365] 1451
Passat (2005 ->) [3C2 - 3C5] 1447
Scirocco (2008 ->) [137] 1465
Sharan II 1469
Tiguan 1471
Touran (02/2003 -> 05/2015) [1T_] 1477

VO-TC-0892

AUDI
A4 (-> 11/2004) [8D, 8E, 8H, B5, B6] 35
A4 (11/2004 -> 2007) [8EC, 8ED] 41
SEAT
Exeo 1097

VO-TC-10775

AUDI
A3 (05/2003 ->) [8P_] 29
TT (08/2006 -> 06/2014) [8J3, 8J9] 79
SEAT
Leon II (09/2005 ->) [1P1] 1117
Toledo III (10/2004 ->) [5P2] 1127
SKODA
Octavia II (2004 ->) [1Z_] 1147
Superb II [3T4 - 3T5] 1159

...VO-TC-10775

Yeti 1163

VW

Beetle 1395
Eos 1407
Golf V 1419
Golf VI 1423
Jetta III 1429
Jetta IV 1433
Scirocco (2008 ->) [137] 1465

VO-TC-10776

AUDI

A3 (05/2003 ->) [8P_] 29
TT (08/2006 -> 06/2014) [8J3, 8J9] 79

SEAT

Leon II (09/2005 ->) [1P1] 1117
Toledo III (10/2004 ->) [5P2] 1127

SKODA

Octavia II (2004 ->) [1Z_] 1147
Superb II [3T4 - 3T5] 1159
Yeti 1163

VW

Beetle 1395
Eos 1407
Golf V 1419
Golf VI 1423
Jetta III 1429
Jetta IV 1433
Scirocco (2008 ->) [137] 1465

VO-TC-13241

AUDI

A4 (-> 11/2004) [8D, 8E, 8H, B5, B6] 35

SEAT

Exeo 1097

VO-TC-13242

AUDI

A4 (-> 11/2004) [8D, 8E, 8H, B5, B6] 35

SEAT

Exeo 1097

VO-TC-13465

AUDI

Q7 (03/2006 -> 08/2015) [4L] 75

PORSCHE

Cayenne I 987

VW

Touareg I 1473
Touareg II 1475

VO-TC-13775

VW

Transporter V - Multivan V 1483

VO-TC-13776

VW

Transporter V - Multivan V 1483

VO-TC-13968

AUDI

Q7 (03/2006 -> 08/2015) [4L] 75

VO-TC-14579

VW

Touran (02/2003 -> 05/2015) [1T_] 1477

VO-TC-14580

VW

Touran (02/2003 -> 05/2015) [1T_] 1477

VO-TC-14759

VW

Transporter V - Multivan V 1483

VO-TC-14760

VW

Transporter V - Multivan V 1483

VO-TC-14977

SEAT

Alhambra II 1083

VO-TC-14978

SEAT

Alhambra II 1083

VO-TC-4000

AUDI

A4 (-> 11/2004) [8D, 8E, 8H, B5, B6] 35
A4 (11/2004 -> 2007) [8EC, 8ED] 41
A6 (1997 -> 2004) [4B, C5] 53
Allroad (05/2000 -> 08/2005) [4BH, C5] 69

SEAT

Exeo 1097

SKODA

Superb I [3U4] 1157

VW

Passat (1996 -> 2000) [3B2 - 3B5] 1443
Passat (2000 -> 2005) [3B3 - 3B6] 1445

VO-TC-4001

AUDI

A4 (-> 11/2004) [8D, 8E, 8H, B5, B6] 35
A4 (11/2004 -> 2007) [8EC, 8ED] 41
A6 (1997 -> 2004) [4B, C5] 53
Allroad (05/2000 -> 08/2005) [4BH, C5] 69

SEAT

Exeo 1097

SKODA

Superb I [3U4] 1157

VW

Passat (1996 -> 2000) [3B2 - 3B5] 1443
Passat (2000 -> 2005) [3B3 - 3B6] 1445

VO-TC-4932

AUDI

A6 (2004 ->2011) [4F2, 4F5, 4FH] 57

...VO-TC-4932

A8 (10/2002 -> 07/2010) [4E_] 65

VW

Phaeton [3D_] 1453

VO-TC-4933

AUDI

A6 (2004 ->2011) [4F2, 4F5, 4FH] 57
A8 (10/2002 -> 07/2010) [4E_] 65

VW

Phaeton [3D_] 1453

VO-TC-4935

AUDI

A6 (2004 ->2011) [4F2, 4F5, 4FH] 57
A8 (10/2002 -> 07/2010) [4E_] 65

VW

Phaeton [3D_] 1453

VO-TC-4936

AUDI

A6 (2004 ->2011) [4F2, 4F5, 4FH] 57
A8 (10/2002 -> 07/2010) [4E_] 65

VW

Phaeton [3D_] 1453

VO-TC-8228

AUDI

A4 (-> 11/2004) [8D, 8E, 8H, B5, B6] 35
A6 (1997 -> 2004) [4B, C5] 53
A8 (-> 09/2002) [4D2, 4D8] 63

SKODA

Superb I [3U4] 1157

VW

Passat (1996 -> 2000) [3B2 - 3B5] 1443
Passat (2000 -> 2005) [3B3 - 3B6] 1445

VO-TC-8229

AUDI

A4 (-> 11/2004) [8D, 8E, 8H, B5, B6] 35
A6 (1997 -> 2004) [4B, C5] 53
A8 (-> 09/2002) [4D2, 4D8] 63

SKODA

Superb I [3U4] 1157

VW

Passat (1996 -> 2000) [3B2 - 3B5] 1443
Passat (2000 -> 2005) [3B3 - 3B6] 1445

VO-TC-8230

AUDI

A4 (-> 11/2004) [8D, 8E, 8H, B5, B6] 35
A6 (1997 -> 2004) [4B, C5] 53
A8 (-> 09/2002) [4D2, 4D8] 63

...VO-TC-8230

SKODA

Superb I [3U4] 1157

VW

Passat (1996 -> 2000) [3B2 - 3B5] 1443
Passat (2000 -> 2005) [3B3 - 3B6] 1445

VO-TC-8737

AUDI

A3 (05/2003 ->) [8P_] 29
TT (08/2006 -> 06/2014) [8J3, 8J9] 79

SEAT

Altea 1085
Leon I (-> 2005) [1M1] 1113
Leon II (09/2005 ->) [1P1] 1117
Toledo III (10/2004 ->) [5P2] 1127

SKODA

Octavia II (2004 ->) [1Z_] 1147
Superb I [3U4] 1157

VW

Eos 1407
Golf V 1419
Golf VI 1423
Jetta III 1429
Passat (2005 ->) [3C2 - 3C5] 1447
Tiguan 1471
Touran (02/2003 -> 05/2015) [1T_] 1477

VO-WP-0235

SEAT

Arosa 1089

VW

Polo (1994 -> 1999) [6N1 - 6NF] 1455

VO-WP-0236

SEAT

Arosa 1089

VW

Polo (1994 -> 1999) [6N1 - 6NF] 1455

VO-WP-0450

FORD

Galaxy I 377

SEAT

Alhambra 1081

VW

Sharan I 1467

VO-WP-0451

FORD

Galaxy I 377

SEAT

Alhambra 1081

VW

Sharan I 1467

VO-WP-0529

VW

Golf III 1413

VO-WP-0530

VW

Golf III 1413

VO-WP-10817

VW

Jetta IV 1433

VO-WP-10818

VW

Jetta IV 1433

VO-WP-1116

SEAT

Cordoba (09/2002 ->) [6L2] 1095

Ibiza IV (02/2002 ->) [6L1] 1107

SKODA

Fabia I [6Y_] 1135

Roomster / Praktik 1155

VW

Fox (10/2003 ->) [1Z1 - 1Z3] 1411

Polo (2001 -> 2009) [9N] 1459

VO-WP-13307

SKODA

Yeti 1163

VW

Caddy III (03/2004 ->) [2C_ - 2K_] 1403

VO-WP-13308

SKODA

Yeti 1163

VW

Caddy III (03/2004 ->) [2C_ - 2K_] 1403

VO-WP-13471

SEAT

Mii [KF1_] 1123

SKODA

Citigo 1133

VW

Up 1485

VO-WP-13472

SEAT

Mii [KF1_] 1123

SKODA

Citigo 1133

VW

Up 1485

VO-WP-13657

VW

Beetle 1395

VO-WP-13658

VW

Beetle 1395

VO-WP-13727

VW

Amarok 1393

VO-WP-13728

VW

Amarok 1393

VO-WP-13729

VW

Amarok 1393

VO-WP-13730

VW

Amarok 1393

VO-WP-13839

AUDI

A3 (04/2012 ->) [8V_] 33

VW

Golf VII 1427

VO-WP-13840

AUDI

A3 (04/2012 ->) [8V_] 33

VW

Golf VII 1427

VO-WP-13841

AUDI

A3 (04/2012 ->) [8V_] 33

VW

Golf VII 1427

VO-WP-13842

AUDI

A3 (04/2012 ->) [8V_] 33

VW

Golf VII 1427

VO-WP-1519

SEAT

Arosa 1089

VW

Lupo 1437

Polo (1999 -> 2001) [6N2] 1457

VO-WP-1520

SEAT

Arosa 1089

VW

Lupo 1437

Polo (1999 -> 2001) [6N2] 1457

VO-WP-1552

AUDI

A3 (-> 05/2003) [8L1] 25

SEAT

Leon I (-> 2005) [1M1] 1113

Toledo II (04/1999 -> 09/2004) [1M2] 1125

SKODA

Octavia I (-> 2004) [1U_] 1143

VW

Bora 1397

Golf IV 1415

New beetle 1439

VO-WP-1553

AUDI

A3 (-> 05/2003) [8L1] 25

...VO-WP-1553

SEAT

Leon I (-> 2005) [1M1] 1113

Toledo II (04/1999 -> 09/2004) [1M2] 1125

SKODA

Octavia I (-> 2004) [1U_] 1143

VW

Bora 1397

Golf IV 1415

New beetle 1439

VO-WP-1861

AUDI

A3 (05/2003 ->) [8P_] 29

SEAT

Altea 1085

Leon II (09/2005 ->) [1P1] 1117

Toledo III (10/2004 ->) [5P2] 1127

SKODA

Octavia II (2004 ->) [1Z_] 1147

Superb II [3T4 - 3T5] 1159

Yeti 1163

VW

Caddy III (03/2004 ->) [2C_ - 2K_] 1403

Eos 1407

Golf V 1419

Golf VI 1423

Jetta III 1429

Scirocco (2008 ->) [137] 1465

Touran (02/2003 -> 05/2015) [1T_] 1477

VO-WP-1862

AUDI

A3 (05/2003 ->) [8P_] 29

SEAT

Altea 1085

Leon II (09/2005 ->) [1P1] 1117

Toledo III (10/2004 ->) [5P2] 1127

SKODA

Octavia II (2004 ->) [1Z_] 1147

Superb II [3T4 - 3T5] 1159

Yeti 1163

VW

Caddy III (03/2004 ->) [2C_ - 2K_] 1403

Eos 1407

Golf V 1419

Golf VI 1423

Jetta III 1429

Scirocco (2008 ->) [137] 1465

Touran (02/2003 -> 05/2015) [1T_] 1477

VO-WP-1864

AUDI

A3 (05/2003 ->) [8P_] 29

SEAT

Altea 1085

...VO-WP-1864

Leon II (09/2005 ->) [1P1] 1117

Toledo III (10/2004 ->) [5P2] 1127

SKODA

Octavia II (2004 ->) [1Z_] 1147

Superb II [3T4 - 3T5] 1159

Yeti 1163

VW

Caddy III (03/2004 ->) [2C_ - 2K_] 1403

Eos 1407

Golf V 1419

Golf VI 1423

Jetta III 1429

Scirocco (2008 ->) [137] 1465

Touran (02/2003 -> 05/2015) [1T_] 1477

VO-WP-1865

AUDI

A3 (05/2003 ->) [8P_] 29

SEAT

Altea 1085

Leon II (09/2005 ->) [1P1] 1117

Toledo III (10/2004 ->) [5P2] 1127

SKODA

Octavia II (2004 ->) [1Z_] 1147

Superb II [3T4 - 3T5] 1159

Yeti 1163

VW

Caddy III (03/2004 ->) [2C_ - 2K_] 1403

Eos 1407

Golf V 1419

Golf VI 1423

Jetta III 1429

Scirocco (2008 ->) [137] 1465

Touran (02/2003 -> 05/2015) [1T_] 1477

VO-WP-1989

SEAT

Cordoba (09/2002 ->) [6L2] 1095

Ibiza IV (02/2002 ->) [6L1] 1107

SKODA

Fabia I [6Y_] 1135

Roomster / Praktik 1155

VW

Fox (10/2003 ->) [1Z1 - 1Z3] 1411

Polo (2001 -> 2009) [9N] 1459

VO-WP-2316

VW

Transporter V - Multivan V 1483

VO-WP-2317

VW

Transporter V - Multivan V 1483

VO-WP-2411

AUDI

A2 [8Z0] 23

VO-WP-2412

AUDI

A2 [8Z0] 23

VO-WP-2413

AUDI

A2 [8Z0] 23

VO-WP-2414

AUDI

A2 [8Z0] 23

VO-WP-3060

AUDI

Q7 (03/2006 -> 08/2015) [4L] 75

PORSCHE

Cayenne I 987

VW

Touareg I 1473

VO-WP-3061

AUDI

Q7 (03/2006 -> 08/2015) [4L] 75

PORSCHE

Cayenne I 987

VW

Touareg I 1473

VO-WP-3071

AUDI

Q7 (03/2006 -> 08/2015) [4L] 75

PORSCHE

Cayenne I 987

VW

Touareg I 1473

VO-WP-5008

AUDI

Q3 (06/2011 ->) [8U] 71

SEAT

Alhambra II 1083

VW

Passat (2010 ->) [362 - 365] 1451

Passat (2005 ->) [3C2 - 3C5] 1447

Sharan II 1469

Tiguan 1471

VO-WP-5009

AUDI

Q3 (06/2011 ->) [8U] 71

SEAT

Alhambra II 1083

VW

Passat (2010 ->) [362 - 365] 1451

Passat (2005 ->) [3C2 - 3C5] 1447

Sharan II 1469

Tiguan 1471

VO-WP-8210

SEAT

Cordoba (-> 09/2002) - Cordoba Vario (08/1996 ->) [6K_] 1091

...VO-WP-8210

Ibiza II (1993 ->08/1999) [6K1] 1101

Ibiza III (08/1999 ->02/2002) 1105

Inca 1111

VW

Caddy II (11/1995 -> 01/2004) [9K_ - 9U_] 1401

Polo Classic - Variant (1995 -> 2001) [6KV] 1463

VO-WP-8221

VW

Golf III 1413

VO-WP-8254

VW

Golf III 1413

VO-WP-8837

SEAT

Cordoba (09/2002 ->) [6L2] 1095

Ibiza IV (02/2002 ->) [6L1] 1107

SKODA

Fabia I [6Y_] 1135

Fabia II [542 - 545] 1137

Roomster / Praktik 1155

VW

Polo (2001 -> 2009) [9N] 1459

VO-WP-8838

SEAT

Cordoba (09/2002 ->) [6L2] 1095

Ibiza IV (02/2002 ->) [6L1] 1107

SKODA

Fabia I [6Y_] 1135

Fabia II [542 - 545] 1137

Roomster / Praktik 1155

VW

Polo (2001 -> 2009) [9N] 1459

VO-WP-8853

AUDI

A1 (05/2010 ->) [8X_] 21

SEAT

Ibiza V (03/2008 ->) [6J_ - 6P_] 1109

Toledo IV (07/2012 ->) [KG3] 1131

SKODA

Rapid [NA2 - NH1 - NH3] 1153

VW

Polo (2009 ->) [6R] 1461

VO-WP-8854

AUDI

A1 (05/2010 ->) [8X_] 21

SEAT

Ibiza V (03/2008 ->) [6J_ - 6P_] 1109

Toledo IV (07/2012 ->) [KG3] 1131

SKODA

Rapid [NA2 - NH1 - NH3] 1153

...VO-WP-8854

VW

Polo (2009 ->) [6R] 1461

VV-AX-0027

MITSUBISHI

Carisma 767

VOLVO

S40 I (-> 12/2003) - V40 1365

VV-AX-0398

VOLVO

S60 I (384) 1369

S80 I 1375

V70 II (2000 ->) 1383

XC70 I 1387

VV-AX-2241

VOLVO

S40 I (-> 12/2003) - V40 1365

VV-AX-3147

VOLVO

S80 I 1375

VV-AX-3518

VOLVO

S70 - C70 - V70 I (-> 2000) 1373

VV-AX-5530

VOLVO

940 I & II (-> 10/1998) - 960 I (-> 07/1994) 1357

VV-AX-5539

VOLVO

940 I & II (-> 10/1998) - 960 I (-> 07/1994) 1357

960 II (07/1994 ->) - S90 - V90 1359

VV-AX-5551

VOLVO

850 1355

S70 - C70 - V70 I (-> 2000) 1373

VV-AX-7868

VOLVO

S60 I (384) 1369

S80 I 1375

V70 II (2000 ->) 1383

XC70 I 1387

XC90 I (275) 1391

VV-AX-8739

VOLVO

S80 II 1377

V70 III (04/2007 ->) 1385

XC70 II (136) 1389

VV-AX-8832

VOLVO

S60 II (134) 1371

VV-AX-9950

VOLVO

940 I & II (-> 10/1998) - 960 I (-> 07/1994) 1357

...VV-AX-9950

960 II (07/1994 ->) - S90 - V90 1359

VV-BJ-0893

VOLVO

S60 I (384) 1369

S80 I 1375

V70 II (2000 ->) 1383

XC70 I 1387

VV-BJ-13891

VOLVO

V40 Hatchback (03/2012 ->) 1379

VV-BJ-13892

VOLVO

V40 Hatchback (03/2012 ->) 1379

VV-BJ-3284

VOLVO

940 I & II (-> 10/1998) - 960 I (-> 07/1994) 1357

960 II (07/1994 ->) - S90 - V90 1359

VV-BJ-3653

FORD

Focus II (11/2004 ->) / Focus C-Max 373

VOLVO

C30 (533) 1361

S40 II (01/2004 ->) 1367

V50 1381

VV-BJ-4399

VOLVO

S60 I (384) 1369

V70 II (2000 ->) 1383

XC90 I (275) 1391

VV-BJ-4873

FORD

Focus II (11/2004 ->) / Focus C-Max 373

VOLVO

C30 (533) 1361

C70 II (2006 ->) 1363

S40 II (01/2004 ->) 1367

V50 1381

VV-BJ-5554

VOLVO

850 1355

S70 - C70 - V70 I (-> 2000) 1373

VV-BJ-8740

VOLVO

XC70 II (136) 1389

VV-DS-0019

VOLVO

850 1355

S70 - C70 - V70 I (-> 2000) 1373

VV-ES-1090

VOLVO

S60 I (384) 1369

MOOG

...VV-ES-1090

S80 I 1375
V70 II (2000 ->) 1383

VV-ES-1091

VOLVO
S60 I (384) 1369
S80 I 1375
V70 II (2000 ->) 1383

VV-ES-13895

VOLVO
V40 Hatchback (03/2012 ->) 1379

VV-ES-13896

VOLVO
V40 Hatchback (03/2012 ->) 1379

VV-ES-2239

VOLVO
S40 I (-> 12/2003) - V40 1365

VV-ES-2240

VOLVO
S40 I (-> 12/2003) - V40 1365

VV-ES-2858

VOLVO
S80 I 1375

VV-ES-3146

VOLVO
S80 I 1375

VV-ES-3283

VOLVO
940 I & II (-> 10/1998) - 960 I (-> 07/1994) 1357
960 II (07/1994 ->) - S90 - V90 1359

VV-ES-4019

VOLVO
XC70 I 1387
XC90 I (275) 1391

VV-ES-4021

VOLVO
XC70 I 1387
XC90 I (275) 1391

VV-ES-5548

VOLVO
850 1355
960 II (07/1994 ->) - S90 - V90 1359
S70 - C70 - V70 I (-> 2000) 1373

VV-ES-5549

VOLVO
850 1355
960 II (07/1994 ->) - S90 - V90 1359
S70 - C70 - V70 I (-> 2000) 1373

VV-LS-0014

MITSUBISHI
Carisma 767

...VV-LS-0014

VOLVO
S40 I (-> 12/2003) - V40 1365

VV-LS-0482

VOLVO
960 II (07/1994 ->) - S90 - V90 1359

VV-LS-1096

VOLVO
S60 I (384) 1369
V70 II (2000 ->) 1383
XC70 I 1387
XC90 I (275) 1391

VV-LS-1099

VOLVO
940 I & II (-> 10/1998) - 960 I (-> 07/1994) 1357

VV-LS-1119

VOLVO
S60 I (384) 1369
S80 I 1375
V70 II (2000 ->) 1383
XC70 I 1387
XC90 I (275) 1391

VV-LS-13272

VOLVO
850 1355
S70 - C70 - V70 I (-> 2000) 1373
V70 II (2000 ->) 1383

VV-LS-1432

MITSUBISHI
Carisma 767
VOLVO
S40 I (-> 12/2003) - V40 1365

VV-LS-2112

VOLVO
S40 I (-> 12/2003) - V40 1365

VV-LS-4171

VOLVO
940 I & II (-> 10/1998) - 960 I (-> 07/1994) 1357

VV-LS-6592

VOLVO
S40 I (-> 12/2003) - V40 1365

VV-LS-7324

VOLVO
S40 I (-> 12/2003) - V40 1365

VV-RK-15051

VOLVO
S60 I (384) 1369
S80 I 1375
XC70 I 1387

VV-RK-15056

VOLVO
XC90 I (275) 1391

VV-RK-8416

VOLVO
850 1355
S70 - C70 - V70 I (-> 2000) 1373

VV-SB-0423

VOLVO
S60 I (384) 1369
S80 I 1375
V70 II (2000 ->) 1383

VV-SB-0424

VOLVO
S60 I (384) 1369
S80 I 1375
V70 II (2000 ->) 1383
XC70 I 1387

VV-SB-10046

VOLVO
850 1355
S70 - C70 - V70 I (-> 2000) 1373
S80 I 1375

VV-SB-10047

VOLVO
850 1355
S70 - C70 - V70 I (-> 2000) 1373

VV-SB-10048

VOLVO
S60 I (384) 1369
S80 I 1375
V70 II (2000 ->) 1383
XC70 I 1387
XC90 I (275) 1391

VV-SB-10049

VOLVO
S40 I (-> 12/2003) - V40 1365

VV-SB-10050

VOLVO
S60 I (384) 1369
S80 I 1375
V70 II (2000 ->) 1383

VV-SB-10051

MITSUBISHI
Colt V (09/1995 ->) 769
VOLVO
S40 I (-> 12/2003) - V40 1365

VV-SB-10086

VOLVO
S40 I (-> 12/2003) - V40 1365

VV-SB-10105

MITSUBISHI
Carisma 767
Colt V (09/1995 ->) 769
Space Star 801
VOLVO
S40 I (-> 12/2003) - V40 1365

VV-SB-10720

VOLVO
S40 I (-> 12/2003) - V40 1365

VV-SB-13273

VOLVO
850 1355
S70 - C70 - V70 I (-> 2000) 1373
V70 II (2000 ->) 1383

VV-SB-13375

SAAB
9-3 I [YS3D] 1073

VV-SB-13377

VOLVO
XC70 I 1387

VV-SB-13507

VOLVO
850 1355
S60 I (384) 1369
S70 - C70 - V70 I (-> 2000) 1373
S80 I 1375
V70 II (2000 ->) 1383
XC70 I 1387
XC90 I (275) 1391

VV-SB-13509

VOLVO
S60 I (384) 1369
S80 I 1375
V70 II (2000 ->) 1383
XC70 I 1387

VV-SB-13510

VOLVO
S60 I (384) 1369
S80 I 1375
V70 II (2000 ->) 1383
XC70 I 1387

VV-SB-13513

VOLVO
S60 I (384) 1369
S80 I 1375
V70 II (2000 ->) 1383
XC70 I 1387

VV-SB-13514

VOLVO
S60 I (384) 1369
S80 I 1375
V70 II (2000 ->) 1383
XC90 I (275) 1391

VV-SB-13845

VOLVO
S60 II (134) 1371

VV-SB-13887

VOLVO
V40 Hatchback (03/2012 ->) 1379

VV-SB-13888

VOLVO
V40 Hatchback (03/2012 ->) 1379

VV-SB-13954

VOLVO
S40 I (-> 12/2003) - V40 1365

VV-SB-13955
VOLVO
S40 I (-> 12/2003) - V40 1365

VV-SB-15121
VOLVO
S60 II (134) 1371
S80 I 1375
S80 II 1377
V70 III (04/2007 ->) 1385

VV-SB-2321
VOLVO
850 1355
S70 - C70 - V70 I (-> 2000) 1373

VV-SB-2351
VOLVO
940 I & II (-> 10/1998) - 960 I (-> 07/1994) 1357

VV-SB-2352
VOLVO
940 I & II (-> 10/1998) - 960 I (-> 07/1994) 1357

VV-SB-3086
VOLVO
S70 - C70 - V70 I (-> 2000) 1373

VV-SB-3630
VOLVO
S40 I (-> 12/2003) - V40 1365

VV-SB-3632
VOLVO
S40 I (-> 12/2003) - V40 1365

VV-SB-3633
VOLVO
S40 I (-> 12/2003) - V40 1365

VV-SB-3647
FORD
Focus II (11/2004 ->) / Focus C-Max 373
Kuga 385
VOLVO
C30 (533) 1361
C70 II (2006 ->) 1363
S40 II (01/2004 ->) 1367
V50 1381

VV-SB-3648
FORD
Focus II (11/2004 ->) / Focus C-Max 373
VOLVO
C30 (533) 1361
C70 II (2006 ->) 1363
S40 II (01/2004 ->) 1367
V50 1381

VV-SB-4415
VOLVO
XC90 I (275) 1391

VV-SB-4416
VOLVO
XC90 I (275) 1391

VV-SB-4519
VOLVO
940 I & II (-> 10/1998) - 960 I (-> 07/1994) 1357

VV-SB-4529
VOLVO
940 I & II (-> 10/1998) - 960 I (-> 07/1994) 1357
960 II (07/1994 ->) - S90 - V90 1359

VV-SB-4530
VOLVO
940 I & II (-> 10/1998) - 960 I (-> 07/1994) 1357
960 II (07/1994 ->) - S90 - V90 1359

VV-SB-7208
VOLVO
S60 I (384) 1369
S80 I 1375
V70 II (2000 ->) 1383

VV-SB-7234
VOLVO
S70 - C70 - V70 I (-> 2000) 1373

VV-SB-7235
VOLVO
S70 - C70 - V70 I (-> 2000) 1373

VV-SB-7954
VOLVO
V70 II (2000 ->) 1383
XC70 I 1387
XC90 I (275) 1391

VV-SB-7955
VOLVO
S60 I (384) 1369
S80 I 1375
V70 II (2000 ->) 1383

VV-SB-9882
FORD
Focus II (11/2004 ->) / Focus C-Max 373
MAZDA
3 (2003 -> 2009) [BK] 631
5 [CR19] 635
VOLVO
C30 (533) 1361
C70 II (2006 ->) 1363
S40 II (01/2004 ->) 1367
V50 1381

VV-TC-12637
VOLVO
S60 I (384) 1369
V70 II (2000 ->) 1383

VV-TC-12638
VOLVO
S60 I (384) 1369
V70 II (2000 ->) 1383

VV-TC-15117
VOLVO
S60 II (134) 1371
S80 II 1377
V70 III (04/2007 ->) 1385

VV-TC-15118
VOLVO
S60 II (134) 1371
S80 II 1377
V70 III (04/2007 ->) 1385

VV-TC-15119
VOLVO
S60 II (134) 1371
S80 II 1377
V70 III (04/2007 ->) 1385

VV-TC-15120
VOLVO
S60 II (134) 1371
S80 II 1377
V70 III (04/2007 ->) 1385

VV-TC-4400
VOLVO
XC90 I (275) 1391

VV-TC-4401
VOLVO
XC90 I (275) 1391

VV-TC-8889
VOLVO
XC70 I 1387

VV-TC-8890
VOLVO
XC70 I 1387

VV-WP-0360
VOLVO
S60 I (384) 1369
V70 II (2000 ->) 1383

VV-WP-0379
VOLVO
S60 I (384) 1369
V70 II (2000 ->) 1383

VV-WP-1093
MITSUBISHI
Carisma 767
Space Star 801
VOLVO
S40 I (-> 12/2003) - V40 1365

VV-WP-1094
MITSUBISHI
Carisma 767
Space Star 801
VOLVO
S40 I (-> 12/2003) - V40 1365

VV-WP-13893
VOLVO
V40 Hatchback (03/2012 ->) 1379

VV-WP-13894
VOLVO
V40 Hatchback (03/2012 ->) 1379

VV-WP-1525
VOLVO
850 1355
S70 - C70 - V70 I (-> 2000) 1373
XC70 I 1387

VV-WP-1526
VOLVO
850 1355
S70 - C70 - V70 I (-> 2000) 1373
XC70 I 1387

VV-WP-3638
VOLVO
S40 I (-> 12/2003) - V40 1365

VV-WP-3639
VOLVO
S40 I (-> 12/2003) - V40 1365

VV-WP-3640
FORD
Focus II (11/2004 ->) / Focus C-Max 373
VOLVO
S40 II (01/2004 ->) 1367
V50 1381

VV-WP-3645
FORD
Focus II (11/2004 ->) / Focus C-Max 373
VOLVO
S40 II (01/2004 ->) 1367
V50 1381

VV-WP-3657
VOLVO
S70 - C70 - V70 I (-> 2000) 1373
XC70 I 1387

VV-WP-3658
VOLVO
S70 - C70 - V70 I (-> 2000) 1373
XC70 I 1387

VV-WP-3950
VOLVO
S80 I 1375

VV-WP-3951
VOLVO
S80 I 1375

VV-WP-4871
FORD
Focus II (11/2004 ->) / Focus C-Max 373
VOLVO
C30 (533) 1361
C70 II (2006 ->) 1363
S40 II (01/2004 ->) 1367

...VV-WP-4871

V50 1381

VV-WP-4872

FORD

Focus II (11/2004 ->) / Focus C-Max 373

VOLVO

C30 (533) 1361
C70 II (2006 ->) 1363
S40 II (01/2004 ->) 1367
V50 1381

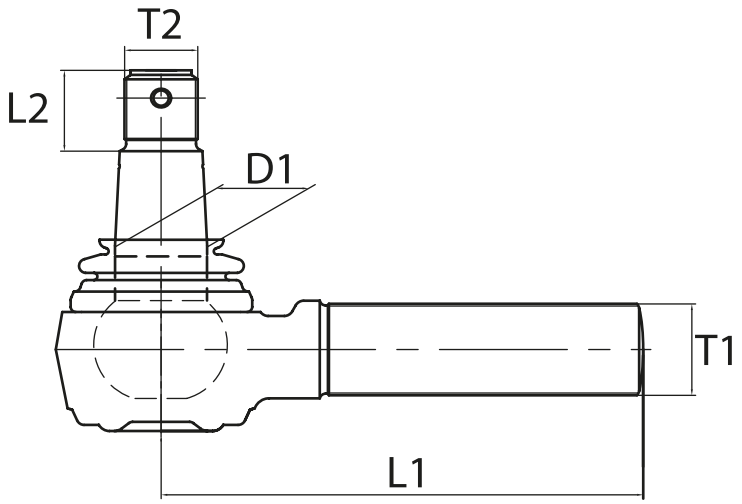

MOOG	Z9	e9	Q max	R9	e>	Z>
AL-ES-0050	76	M14X1.5	ANGLED	12.55	M10X1.25	-
AL-ES-0051	76	M14X1.5	ANGLED	12.55	M10X1.25	-
AL-ES-0265	-	-	-	14.5	M10X1.25	22.5
AL-ES-10781	94	M16X1.5	ANGLED	17.1	M12X1.5	32.5
AL-ES-10782	94	M16X1.5	ANGLED	17.1	M12X1.5	32.5
AL-ES-5417	116.5	M20X1.5	ANGLED	16.55	M12X1.75	23
AL-ES-5418	116.5	M20X1.5	ANGLED	16.55	M12X1.75	23
AL-ES-7513	-	-	-	14.5	M10X1.25	22.5
AU-ES-10907	207	M16X1.5	ANGLED	19	M12X1.5	32.2
AU-ES-10908	207	M16X1.5	ANGLED	19	M12X1.5	32.2
AU-ES-3721	94	M14X1.5	ANGLED	16	M12X1.5	-
AU-ES-3723	94	M14X1.5	ANGLED	16	M12X1.5	-
AU-ES-3839	155	M14X1.5	STRAIGHT	17.5	M8X1.25	-
AU-ES-3890	-	-	-	-	-	-
AU-ES-4918	160	M16X1.5	STRAIGHT	23	M8X1.25	31
AU-ES-5191	200	M16X1.5	ANGLED	19	M12X1.5	23.5
AU-ES-5192	200	M16X1.5	ANGLED	19	M12X1.5	23.5
AU-ES-7149	75	M16X1.5	ANGLED	14	M12X1.5	23.5
AU-ES-7150	75	M16X1.5	ANGLED	14	M12X1.5	23.5
AU-ES-7377	207	M16X1.5	ANGLED	18.5	M12X1.5	-
AU-ES-7378	207	M16X1.5	ANGLED	18.5	M12X1.5	-
BM-ES-0490	250	M14X1.5	ANGLED	16	M12X1.5	-
BM-ES-0491	250	M14X1.5	ANGLED	16	M12X1.5	-
BM-ES-10441	160	M14X1.5	ANGLED	16.2	M14X1.5	35
BM-ES-10442	160	M14X1.5	ANGLED	16.2	M14X1.5	35
BM-ES-13420	167.5	M16X1.5	ANGLED	19	M14X1.5	24.5
BM-ES-13441	269.5	M14X1.5	ANGLED	16.9	M12X1.5	24.5
BM-ES-13442	269.5	M14X1.5	ANGLED	16.9	M12X1.5	24.5
BM-ES-14065	146	M14X1.5	ANGLED	16.2	M14X1.5	-
BM-ES-14066	146	M14X1.5	ANGLED	16.2	M14X1.5	-
BM-ES-14787	235.5	M14X1.5	ANGLED	16.2	M14X1.5	30
BM-ES-14788	235.5	M14X1.5	ANGLED	16.2	M14X1.5	30
BM-ES-14893	195.5	M14X1.5	ANGLED	19	M14X1.5	25
BM-ES-14894	195.5	M14X1.5	ANGLED	19	M14X1.5	25
BM-ES-14905	269	M14X1.5	ANGLED	17	M12X1.5	25
BM-ES-14906	269	M14X1.5	ANGLED	17	M12X1.5	25
BM-ES-15219	204	M14X1.5	ANGLED	16.2	M12X1.5	24.5
BM-ES-15220	204	M14X1.5	ANGLED	13.5	M12X1.5	24.5
BM-ES-1871	230	M14X1.5	ANGLED	15.3	M10X1.25	22
BM-ES-1874	230	M14X1.5	ANGLED	15.3	M14X1.5	20
BM-ES-2113	190	M14X1.5	STRAIGHT	15.4	M14X1.5	20

MOOG	Z9	e9	Q vzx	R9	e>	Z>
BM-ES-2439	160	M16X1.5	STRAIGHT	16.2	M14X1.5	32
BM-ES-3728	140	M14X1.5	STRAIGHT	15.7	M14X1.5	30
BM-ES-3729	140	M14X1.5	STRAIGHT	15.7	M14X1.5	30
BM-ES-3857	189	M14X1.5	ANGLED	15.5	M14X1.5	23
BM-ES-4270	224	M16X1	ANGLED	16.4	M12X1.5	33
BM-ES-4279	224	M16X1	ANGLED	14	M12X1.5	33
BM-ES-4341	215	M14X1.5	ANGLED	12.8	M10X1	-
BM-ES-4344	215	M14X1.5	ANGLED	14.15	M12X1.5	-
BM-ES-4350	220	M16X1.5	ANGLED	16.6	M12X1.5	19
BM-ES-4351	220	M16X1.5	ANGLED	16.6	M12X1.5	19
BM-ES-4374	220	M16X1.5	ANGLED	16.4	M12X1.5	33
BM-ES-4375	224	M16X1	ANGLED	16.4	M12X1.5	33
BM-ES-4876	190	M14X1.5	ANGLED	18.3	M14X1.5	20
BM-ES-5601	235	M14X1.5	ANGLED	17	M12X1.5	-
BM-ES-5602	235	M14X1.5	ANGLED	17	M12X1.5	-
BM-ES-5621	185	M14X1.5	ANGLED	-	-	-
BM-ES-6593	160	M16X1.5	STRAIGHT	18.2	M14X1.5	-
BM-ES-6983	233	M14X1.5	ANGLED	15.3	M10X1.25	22
BM-ES-6986	233	M14X1.5	ANGLED	15.3	M10X1.25	22
BM-ES-8883	122	M14X1.5	ANGLED	18	M14X1.5	24.3
BM-ES-8884	122	M14X1.5	ANGLED	18	M14X1.5	24.3
CH-ES-0313	119	M14X1.5	STRAIGHT	15	M12X1.25	29.5
CH-ES-10748	142	M14X1.5	STRAIGHT	16	M12X1.5	34
CH-ES-7921	135	11/16"-18 LHT	STRAIGHT	15.9	1/2"-20	21
CH-ES-8353	121	M16X1.5	STRAIGHT	19	M14X1.5	41
CI-ES-0011	335	L M16X1.5	STRAIGHT	-	-	-
CI-ES-0864	170	M14X1.5	ANGLED	14.8	M10X1.5	-
CI-ES-0865	170	M14X1.5	ANGLED	14.8	M10X1.5	-
CI-ES-0930	233	M16X1.5	ANGLED	14	M10X1.25	-
CI-ES-0931	233	M16X1.5	ANGLED	14	M10X1.25	-
CI-ES-13641	210	M16X1.5	ANGLED	15.1	M10X1.25	25
CI-ES-13642	210	M16X1.5	ANGLED	15.1	M10X1.25	25
CI-ES-13989	215	M14X1.5	STRAIGHT	19	M12X1.5	27
CI-ES-13990	215	M14X1.5	STRAIGHT	19	M12X1.5	27
CI-ES-14931	170	M16X1.5	ANGLED	15	M10X1.25	28
CI-ES-14932	170	M16X1.5	ANGLED	15	M10X1.25	28
CI-ES-1782	355	M16X1.5	STRAIGHT	20	M16X1.5	-
CI-ES-2460	120	M16X1.5	STRAIGHT	20	M14X1.5	-
CI-ES-2466	75	M14X1.5	STRAIGHT	15.5	M10X1.25	19.5
CI-ES-3848	214.8	-	-	13	M14X1.5	-
CI-ES-3964	162.5	M12X1.25	ANGLED	15	M12X1.25	23.5
CI-ES-3965	162.5	M12X1.25	ANGLED	15	M12X1.25	23.5
CI-ES-5119	211.5	M16X1.5	ANGLED	21.3	M14X1.5	-
CI-ES-5120	211.5	M16X1.5	ANGLED	21.3	M14X1.5	-
CI-ES-7237	120	M16X1.5	STRAIGHT	15.9	M10X1.25	22
CI-ES-7238	120	M16X1.5	STRAIGHT	15.9	M10X1.25	22
CI-ES-7316	80	M14X1.5	STRAIGHT	-	M12X1.5	-
CI-ES-8328	177.5	M14X1.5	ANGLED	-	M10X1.25	26.5
CI-ES-8329	177.5	M14X1.5	ANGLED	-	M10X1.25	26.5
CI-ES-8465	211	M14X1.5	ANGLED	-	M12X1.5	-
CI-ES-8466	211	M14X1.5	ANGLED	-	M12X1.5	-
CI-ES-8975	112.5	M14X1.5	STRAIGHT	14.8	M10X1.25	23
CI-ES-8976	112.5	M14X1.5	STRAIGHT	14.8	M10X1.25	23
DE-ES-0126	70	M12X1.5	STRAIGHT	14	M12X1.25	24
DE-ES-0452	72	M12X1.5	STRAIGHT	12.5	M12X1.25	-
DE-ES-0634	74	M14X1.5	STRAIGHT	15	M12X1.5	-
DE-ES-0639	70	M12X1.5	STRAIGHT	14	M12X1.25	15.8
DE-ES-10621	73	M12X1.25	STRAIGHT	15	M12X1.25	21
DE-ES-2471	194	M14X1.5	ANGLED	15.05	M12X1.5	18.5
DE-ES-2472	194	M14X1.5	ANGLED	15.05	M12X1.5	18.5
DE-ES-2475	188	M12X1.5	ANGLED	13.2	M12X1.25	18.5

MOOG	Z9	e9	Q vzx	R9	e>	Z>
DE-ES-2476	188	M12X1.5	ANGLED	13.2	M12X1.25	18.5
DE-ES-2861	84	M14X1.5	STRAIGHT	18	M14X1.5	20
DE-ES-3893	190	M12X1.5	STRAIGHT	15.1	M12X1.25	18
DE-ES-3894	188	M12X1.5	ANGLED	15.1	M12X1.25	18
DE-ES-3968	142	M14X1.5	ANGLED	19.1	M12X1.5	19
DE-ES-3969	142	M14X1.5	STRAIGHT	15	M12X1.5	19
DE-ES-7242	74	M14X1.5	STRAIGHT	15.05	M12X1.5	19.5
DI-ES-10507	149	M14X1.5	ANGLED	17.5	M12X1.25	19.5
DI-ES-10508	149	M14X1.5	ANGLED	17.5	M12X1.25	19.5
DI-ES-1606	115	M12X1.25	ANGLED	14.1	M10X1.25	16
DI-ES-2502	70	M14X1.5	STRAIGHT	17.5	M12X1.25	17
DI-ES-2619	64.5	-	-	-	-	-
DI-ES-2620	65	-	-	-	-	-
FD-ES-0604	92	M16X1.5	ANGLED	15.8	-	-
FD-ES-0605	92	M16X1.5	ANGLED	15.8	-	-
FD-ES-0841	91	M16X1.5	STRAIGHT	15.5	M10X1.5	-
FD-ES-0957	91	M16X1.5	STRAIGHT	16.65	M14X2	30
FD-ES-14911	116	M18X1.5	ANGLED	14.5	M14X2	15
FD-ES-14912	116	M18X1.5	ANGLED	14.5	M14X2	15
FD-ES-1535	75	M14X2	STRAIGHT	15	M10X1.5	19.5
FD-ES-1536	75	M14X2	STRAIGHT	15	M10X1.5	19.5
FD-ES-2050	75	M14X2	STRAIGHT	15.9	M10X1.5	21.5
FD-ES-2261	94	M14X1.5	ANGLED	13.8	M10X1.25	-
FD-ES-2262	94	M14X1.5	ANGLED	13.8	M10X1.25	-
FD-ES-3665	100	M16X1.5	ANGLED	16.25	M10X1.5	19.5
FD-ES-3891	100	M16X1.5	ANGLED	16.25	M10X1.5	19.5
FD-ES-4105	75	M14X2	STRAIGHT	15	M10X1.25	24.5
FD-ES-4106	75	M14X2	STRAIGHT	16	M10X1.25	24.5
FD-ES-4107	100	M16X1.5	STRAIGHT	20	M16X1.5	24.5
FD-ES-4112	92	M16X1.5	STRAIGHT	14.6	M10X1	20
FD-ES-4113	92	M16X1.5	STRAIGHT	14.6	M10X1	20
FD-ES-4125	67	1/2X20H	STRAIGHT	13.8	M10X1.25	20
FD-ES-4147	75	M14X2	STRAIGHT	13.8	M10X1.25	20
FD-ES-4148	75	M14X2	STRAIGHT	13.8	M10X1.25	20
FD-ES-4155	92	M16X1.5	STRAIGHT	15	M10X1.25	24.5
FD-ES-4156	92	M16X1.5	STRAIGHT	15	M10X1.25	24.5
FD-ES-5108	112	M18X1.5	ANGLED	20	M14X2	-
FD-ES-5109	112	M18X1.5	ANGLED	20	M14X2	-
FD-ES-7386	94	M14X1.5	ANGLED	-	M10X1.25	24
FD-ES-7387	94	M14X1.5	ANGLED	-	M10X1.25	24
FD-ES-8337	108	M16X1.5	STRAIGHT	15	M10X1.5	24.5
FD-ES-8338	108	M16X1.5	STRAIGHT	15	M10X1.5	24.5
FD-ES-8999	109.5	M16X1.5	ANGLED	12.35	M10X1.5	22
FD-ES-9000	-	-	-	-	-	-
FI-ES-0241	143	M14X1.5	STRAIGHT	13	M10X1.25	21
FI-ES-0242	143	M14X1.5	STRAIGHT	13	M10X1.25	21
FI-ES-0261	92	M16X1	STRAIGHT	15.9	M14X1.5	20
FI-ES-0446	138	M14X1.5	STRAIGHT	12	M10X1.25	20.5
FI-ES-0937	95	M14X1.5	STRAIGHT	11.65	M10X1.25	41
FI-ES-10933	123	M14X1.5	STRAIGHT	16	M12X1.25	31
FI-ES-12625	152.5	M12X1.5	STRAIGHT	13.9	M10X1.25	21
FI-ES-14639	135	M14X1.5	STRAIGHT	14.7	M10X1.5	23
FI-ES-14640	135	M14X1.5	STRAIGHT	14.7	M10X1.5	23
FI-ES-15163	135	M14X1.5	STRAIGHT	14.8	M10X1.5	23.6
FI-ES-15164	135	M14X1.5	STRAIGHT	14.8	M10X1.5	23.6
FI-ES-2507	148	M12X1.5	ANGLED	14.5	M10X1.25	21.5
FI-ES-2508	148	M12X1.5	ANGLED	14.5	M10X1.5	21.5
FI-ES-2512	106.5	M14X1.5	STRAIGHT	13.5	M10X1.25	24.5
FI-ES-2516	144	M12X1.5	ANGLED	11.35	M10X1.25	23
FI-ES-2517	144	M12X1.5	ANGLED	11.35	M10X1.25	23
FI-ES-3525	110	M14X1.5	STRAIGHT	12.5	M10X1.25	23

MOOG	Z9	e9	Q vzx	R9	e>	Z>
FI-ES-4082	118	M12X1.5	STRAIGHT	13	M10X1.25	21
FI-ES-4675	128	M12X1.5	STRAIGHT	13	M10X1.25	-
FI-ES-4676	4676	M12X1.5	ANGLED	13	M10X1.25	21.5
FI-ES-4684	159	M12X1.5	STRAIGHT	13	M10X1.25	24.5
FI-ES-5091	153	M14X1.5	STRAIGHT	14.8	M10X1.25	38.5
FI-ES-5155	84	M14X1.5	STRAIGHT	13	M12X1.25	-
FI-ES-7529	125	M16X1.5	STRAIGHT	16.5	M12X1.25	22
FI-ES-8785	112.5	M14X1.5	STRAIGHT	-	M10X1.25	24.5
FI-ES-8786	112.5	M14X1.5	STRAIGHT	-	M10X1.25	24.5
HO-ES-0170	180	M14X1.5	ANGLED	14	M10X1.25	-
HO-ES-0171	180	M14X1.5	ANGLED	14	M10X1.25	-
HO-ES-10515	180	M14X1.5	ANGLED	14	M10X1.25	22
HO-ES-10516	180	M14X1.5	ANGLED	14	M10X1.25	22
HO-ES-13261	203	M14X1.5	ANGLED	15.05	M12X1.25	26.7
HO-ES-13262	203	M14X1.5	ANGLED	15.05	M12X1.25	26.7
HO-ES-14809	151	M14X1.5	ANGLED	15	M12X1.25	25
HO-ES-14810	151	M14X1.5	ANGLED	15	M12X1.25	25
HO-ES-2547	61	M14X1.5	STRAIGHT	14	M10X1.25	22
HO-ES-2554	218	M14X1.5	ANGLED	14	M10X1.25	-
HO-ES-2555	218	M14X1.5	ANGLED	14	M10X1.25	-
HO-ES-2575	71	M12X1.25	STRAIGHT	15.5	M12X1.25	24.5
HO-ES-2582	178	M12X1.25	ANGLED	14	M10X1.25	21.7
HO-ES-2583	178	M12X1.25	ANGLED	14	M10X1.25	21.7
HO-ES-5073	204.5	M14X1.5	ANGLED	14.1	M10X1.25	23
HO-ES-5074	204.5	M14X1.5	ANGLED	14.1	M10X1.25	23
HO-ES-5728	188	M14X1.5	ANGLED	-	M12X1.25	-
HO-ES-5729	188	M14X1.5	ANGLED	-	M12X1.25	-
HO-ES-7048	197	M14X1.5	ANGLED	-	M12X1.25	-
HO-ES-7049	197	M14X1.5	ANGLED	-	M12X1.25	-
HO-ES-8096	103	M14X1.5	STRAIGHT	15	M10X1.25	25.3
HY-ES-0172	80	M14X1.5	STRAIGHT	15	M10X1.25	-
HY-ES-10811	233	M16X1.5	ANGLED	15	M10X1.25	20.5
HY-ES-10812	-	-	-	-	-	-
HY-ES-1163	96.5	M12X1.25	STRAIGHT	15	M10X1.25	20.8
HY-ES-13701	202	M14X1.5	ANGLED	15	M10X1.25	19
HY-ES-13702	202	M14X1.5	ANGLED	15	M10X1.25	19
HY-ES-14981	78	M14X1.5	ANGLED	15	M10X1.25	13
HY-ES-14982	78	M14X1.5	ANGLED	15	M10X1.25	13
HY-ES-1637	78	M12X1.25	STRAIGHT	15	M10X1.25	21
HY-ES-1705	317.5	M16X1.5		14.5	M14X1.5	
HY-ES-1906	72	M14X1.5	STRAIGHT	15	M10X1.25	19.5
HY-ES-2617	170	M14X1.5	ANGLED	15	M10X1.25	21.5
HY-ES-2618	170	M14X1.5	ANGLED	15	M10X1.25	21.5
HY-ES-3886	246	M14X1.5	ANGLED	16	M12X1.5	22
HY-ES-3887	170	M16X1.5	ANGLED	15	M10X1.25	21.5
HY-ES-4879	218	M16X1.5	ANGLED	15	M10X1.25	20
HY-ES-4880	218	M16X1.5	ANGLED	15	M10X1.5	20
HY-ES-4881	188.5	M14X1.5	ANGLED	15	M10X1.25	21
HY-ES-4882	188.5	M14X1.5	ANGLED	15	M10X1.25	21
HY-ES-4938	228	M16X1.5	ANGLED	16	M12X1.25	20
HY-ES-4939	228	M16X1.5	ANGLED	16	M12X1.25	20
HY-ES-7092	230	M14X1.5	ANGLED	15.05	M10X1.25	22
HY-ES-7093	230	M14X1.5	ANGLED	15.05	M10X1.25	22
HY-ES-8856	72	M12X1.25	ANGLED	15	M10X1.25	20.6
JA-ES-0585	74	M14X1.5	STRAIGHT	15.95	M12X1.5	20.5
KI-ES-4200	71	M12X1.25	STRAIGHT	21	M10X1.25	21
KI-ES-4411	158	M14X1.5	ANGLED	16	M12X1.25	35.6
KI-ES-8766	189	M16X1.5	ANGLED	15	M10X1.25	20.5
KI-ES-8767	189	M16X1.5	ANGLED	15	M10X1.25	20.5
KI-ES-8925	-	-	-	-	-	-
KI-ES-8926	-	-	-	-	-	-

MOOG	Z9	e9	Q vzx	R9	e>	Z>
KI-ES-8935	-	-	-	-	-	-
LA-ES-0060	180.5	M18X1.5	ANGLED	14	M12X1.25	20
LA-ES-0061	180	M18X1.5	STRAIGHT	14	M12X1.5	23
LA-ES-0062	347	M18X1.5	STRAIGHT	-	M10X1.25	-
LA-ES-0386	170	M16X1	ANGLED	15.9	M14X1.5	20
LA-ES-0649	74	M18X1.5	STRAIGHT	14.05	M12X1.25	20
LA-ES-0650	74	M18X1.5	ANGLED	14.05	M12X1.25	20
LA-ES-8804	85	M24X1.5	STRAIGHT	14	M12X1.25	22
LA-ES-8805	85	M24X1.5	STRAIGHT	14	M12X1.25	22
LN-ES-1770	145	M14X1.5	STRAIGHT	14.5	M10X1.25	21
LN-ES-4771	152.5	M12X1.5	STRAIGHT	14.8	M10X1.25	40
LR-ES-13411	116	M18X1.5	ANGLED	22.9	M14X2	35
LR-ES-13412	116	M18X1.5	ANGLED	22.9	M14X2	35
LR-ES-13987	90	M16X1.5	ANGLED	23	M12X1.25	30
LR-ES-14791	104	M14X1.5	STRAIGHT	23	M14X2	35
LR-ES-1921	72	M16X1.5	STRAIGHT	14.6	M12X1.5	22
LR-ES-1923	72	M16X1.5	STRAIGHT	14.6	M12X1.5	22
LR-ES-2684	1170	M22X1.5	STRAIGHT	17.8	M12X1.25	25
LR-ES-3528	221	M16X1.5	ANGLED	18.3	M14X1.5	16
LR-ES-5018	90	M16X1.5	ANGLED	-	M12X1.75	-
LR-ES-5019	-	M17X2		19	-	
LR-ES-5052	1060	M22X1.5	-	17.7	M12X1.5	-
LR-ES-7043	100	M16X1.5	ANGLED	21.05	M12X1.75	31.6
MD-ES-0621	93	M14XP1.5	ANGLED	15	M12X1.25	-
MD-ES-0786	-	-	-	-	-	-
MD-ES-10525	207	M14X1.5	ANGLED	15	M12X1.25	24
MD-ES-10526	207	M14X1.5	ANGLED	15	M12X1.25	24
MD-ES-10527	-	-	-	-	-	-
MD-ES-10528	-	-	-	-	-	-
MD-ES-10685	175	M14X1.5	ANGLED	12.3	M12X1.25	25.35
MD-ES-10686	175	M14X1.5	ANGLED	12.3	M12X1.25	25.35
MD-ES-13871	100	M14X1.5	STRAIGHT	12.9	M12X1.25	24
MD-ES-15087	182	M14X1.5	ANGLED	15.5	M12X1.25	26
MD-ES-15088	182	M14X1.5	ANGLED	15.5	M12X1.25	26
MD-ES-1655	113	M12X1.25	STRAIGHT	15.1	M12X1.25	-
MD-ES-1665	187	M14X1.5	STRAIGHT	15.7	M12X1.5	17.5
MD-ES-1815	130	M14X1.5	ANGLED	16	M12X1.25	18
MD-ES-2361	144	M14X1.5	ANGLED	15.2	M12X1.25	23
MD-ES-2362	144	M14X1.5	ANGLED	15.2	M12X1.25	22
MD-ES-2704	131	M14X1.5	ANGLED	15.2	M12X1.25	21.5
MD-ES-2705	131	M14X1.5	ANGLED	15.2	M12X1.25	21.5
MD-ES-2712	157	M14X1.5	ANGLED	16	M12X1.25	21.5
MD-ES-2713	85	M14X1.5	STRAIGHT	16.1	M12X1.25	19
MD-ES-2827	74	M10X1.25	STRAIGHT	14	M10X1.25	21
MD-ES-3251	-	-	-	-	-	-
MD-ES-3926	155	M14X1.5	ANGLED	16.1	M12X1.25	21.5
MD-ES-3934	155	M14X1.5	ANGLED	16.1	M12X1.25	21.5
MD-ES-4717	108	M17X1.5	ANGLED	12.2	M10X1.25	28.5
MD-ES-4718	108	M17X1.5	ANGLED	12.2	M10X1.25	28.5
MD-ES-4720	84.5	L M14X1.5	STRAIGHT	-	M12X1.25	20
ME-ES-0977	210.5	M16X1.5	STRAIGHT	18.55	M14X1.5	26
ME-ES-0978	210.5	M16X1.5	ANGLED	15	M14X1.5	18.5
ME-ES-10147	212.5	M14X1.5	ANGLED	18.6	M14X1.5	27.5
ME-ES-10148	-	-	-	-	-	-
ME-ES-10705	197.8	M14X1.5	ANGLED	18.6	M14X1.5	22.5
ME-ES-10706	-	-	-	-	-	-
ME-ES-13435	209.5	M14X1.5	ANGLED	20.2	M14X1.5	16
ME-ES-13436	209.5	M14X1.5	ANGLED	20.2	M14X1.5	16
ME-ES-13977	176.5	M16X1.5	ANGLED	42	M14X1.5	39
ME-ES-14841	201	M14X1.5	ANGLED	18.5	M14X1.5	22.5
ME-ES-14842	201	M14X1.5	ANGLED	18.5	M14X1.5	22.5

MOOG	Z9	e9	Q vzx	R9	e>	Z>
ME-ES-15111	195	M14X1.5	ANGLED	21.2	M14X1.5	55
ME-ES-15112	195	M14X1.5	ANGLED	21.2	M14X1.5	55
ME-ES-15171	189	M14X1.5	ANGLED	21.2	M14X1.5	40
ME-ES-15172	189	M14X1.5	ANGLED	21.2	M14X1.5	40
ME-ES-1528	205	M12X1.5	STRAIGHT	16.5	M12X1.5	16.5
ME-ES-1529	205	M12X1.5	ANGLED	16.5	M12X1.5	16.5
ME-ES-1703	135	M14X1.5	STRAIGHT	14.2	M10X1.25	17
ME-ES-2072	200	M14X1.5	STRAIGHT	16.6	M14X1.5	22.5
ME-ES-2074	200	M14X1.5	ANGLED	16.6	M14X1.5	27
ME-ES-2079	70.5	M12X1.25	STRAIGHT	-	M10X1.5	-
ME-ES-2284	194.5	M14X1.5	ANGLED	18.2	M14X1.5	25
ME-ES-2285	194.5	M14X1.5	ANGLED	18.2	M14X1.5	25
ME-ES-2728	183	M14X1.5	ANGLED	16.6	M14X1.5	22.5
ME-ES-2729	183	M14X1.5	ANGLED	16.6	M14X1.5	22.5
ME-ES-2750	205	M14X1.5	ANGLED	18.6	M14X1.5	23.5
ME-ES-2751	205	M14X1.5	ANGLED	18.6	M14X1.5	23.5
ME-ES-2853	89	-	ANGLED	13.3	M12X1.5	-
ME-ES-4181	190	M14X1.5	STRAIGHT	18.2	M14X1.5	23
ME-ES-4393	169	M16X1.5	ANGLED	21	M14X1.5	23
ME-ES-4394	169	M16X1.5	ANGLED	21	M14X1.5	23
ME-ES-4953	90	M16X1.5	STRAIGHT	16.8	M14X1.5	-
ME-ES-5172	184	M14X1.5	STRAIGHT	19	M14X1.5	-
ME-ES-5593	250	M14X1.5	ANGLED	18.9	M14X1.5	-
ME-ES-5594	250	M14X1.5	ANGLED	18.9	M14X1.5	-
ME-ES-5599	234	M14X1.5	ANGLED	-	M14X1.5	-
ME-ES-5600	234	M14X1.5	ANGLED	-	M14X1.5	-
ME-ES-5648	175	M14X1.5	ANGLED	18.2	M14X1.5	22.1
ME-ES-5649	175	M14X1.5	ANGLED	18.2	M14X1.5	22.1
ME-ES-6129	80	M10X1	STRAIGHT	14	M14X1.5	18
ME-ES-6310	136	M14X1.5	STRAIGHT	14	M10X1	18.5
ME-ES-6330	75	M12X1.5	STRAIGHT	16	M12X1.5	21
ME-ES-6334	82	M14X1.5	STRAIGHT	16.5	M12X1.5	24
ME-ES-6335	135	M14X1.5	STRAIGHT	16.5	M12X1.5	24
ME-ES-6339	150	M14X1.5	STRAIGHT	18	M14X1.5	20.8
ME-ES-6340	150	M14X1.5	STRAIGHT	18	M14X1.5	20.8
ME-ES-6342	74	M16X1.5	STRAIGHT	20	M14X1.5	21.5
ME-ES-6344	76.5	M16X1.5	ANGLED	20	M14X1.5	21.5
ME-ES-7770	190	M14X1.5	ANGLED	19.7	M14X1.5	22
ME-ES-7771	-	-	-	-	-	-
MI-ES-0176	110	M16X1.5	STRAIGHT	15.6	M12X1.25	-
MI-ES-0682	174	M16X1.5	-	16	M12X1.25	-
MI-ES-10871	182	M16X1.5	ANGLED	15.9	M12X1.25	21
MI-ES-10872	182	M16X1.5	ANGLED	15.9	M12X1.25	21.1
MI-ES-1629	133	M12X1.25	ANGLED	14	M10X1.25	17
MI-ES-2194	90	M18X1.5	STRAIGHT	18.2	M14X1.5	-
MI-ES-2197	153	M14X1.5	ANGLED	12.3	M10X1.25	19.5
MI-ES-2198	245	M22X1.5	STRAIGHT	18	M14X1.5	-
MI-ES-2245	178	M16X1.5	STRAIGHT	15.9	M12X1.25	23
MI-ES-2246	112	M16X1.5	ANGLED	15.8	M12X1.25	23.5
MI-ES-2937	80	M12X1.25	STRAIGHT	15	M10X1.25	-
MI-ES-3044	-	-	-	-	-	-
MI-ES-4885	183	M16X1.5	ANGLED	15.5	M12X1.25	36.8
MI-ES-4886	183	M16X1.5	ANGLED	15.5	M12X1.25	36.8
MI-ES-8437	193	M16X1.5	ANGLED	16.2	M12X1.25	24
MI-ES-8438	193	M16X1.5	ANGLED	16.2	M12X1.25	24
NI-ES-0310	94	M12X1.25	STRAIGHT	15.5	M12X1.25	21
NI-ES-10625	192	M12X1.25	ANGLED	14.45	M10X1.25	24.7
NI-ES-10626	192	M12X1.25	ANGLED	14.45	M10X1.25	24.2
NI-ES-10902	95	M18X1.5	ANGLED	16.4	M12X1.25	20
NI-ES-10904	94	M14X1.5	ANGLED	18.6	M14X1.5	-
NI-ES-1254	94	M12X1.25	STRAIGHT	15	M12X1.25	-

MOOG	Z9	e9	Q vzx	R9	e>	Z>
NI-ES-14847	193	M14X1.5	ANGLED	13	M10X1.25	23
NI-ES-14848	193	M14X1.5	ANGLED	13	M10X1.25	23
NI-ES-2777	95	M12X1.5	STRAIGHT	15.1	M12X1.25	23
NI-ES-2780	94	M14X1.5	STRAIGHT	15.5	M12X1.25	19.5
NI-ES-2790	200	M14X1.5	ANGLED	15	M10X1.25	24
NI-ES-2791	200	M14X1.5	ANGLED	15	M10X1.25	24
NI-ES-2801	114	R M14X1.5	STRAIGHT	18.6	M14X1.5	22.6
NI-ES-3002	131	M16X1.5	ANGLED	13.3	M12X1.25	34.5
NI-ES-3051	131	M16X1.5LHT	ANGLED	13.3	M12X1.25	34.5
NI-ES-4924	184	M14X1.5	ANGLED	18	M14X1.5	-
NI-ES-4925	184	M14X1.5	ANGLED	18	M14X1.5	-
NI-ES-4957	194	M14X1.5	STRAIGHT	18	M14X1.5	-
NI-ES-5642	200	M12X1.25	ANGLED	14.5	M10X1.25	-
NI-ES-5643	200	M12X1.25	ANGLED	14.5	M10X1.25	-
NI-ES-7225	181	M14X1.5	ANGLED	-	M10X1.25	-
NI-ES-7226	181	M14X1.5	ANGLED	-	M10X1.25	-
OP-ES-0480	76	M12X1.5	STRAIGHT	13.6	M10X1.25	18.5
OP-ES-0514	135	M14X1.5	STRAIGHT	17.2	M12X1.5	22
OP-ES-10119	234.5	M18X1.5	ANGLED	21.3	M14X1.5	33
OP-ES-10120	-	-	-	-	-	-
OP-ES-13627	159.5	M16X1.5	ANGLED	18.1	M12X1.75	35
OP-ES-13628	159.5	M16X1.5	ANGLED	18.1	M12X1.75	35
OP-ES-13924	89.5	M14X1.5	STRAIGHT	16	M12X1.75	-
OP-ES-1501	74	M14X1.5	STRAIGHT	-	M14X1.5	24
OP-ES-1502	74	M14X1.5	STRAIGHT	17.9	M14X1.5	-
OP-ES-15335	143	M14X1.5	ANGLED	18	M12X1.75	39
OP-ES-15336	143	M14X1.5	ANGLED	18	M12X1.75	39
OP-ES-1892	71	M14X1.5	STRAIGHT	13.65	M10X1.5	-
OP-ES-2081	135	M14X1.5	STRAIGHT	15	M12X1.5	-
OP-ES-2082	135	M14X1.5	STRAIGHT	15	M12X1.5	-
OP-ES-2814	75	M14X1.5	STRAIGHT	18	M14X1.5	-
OP-ES-2818	140	M14X1.5	ANGLED	16	M12X1.5	-
OP-ES-2819	140	M14X1.5	ANGLED	16	M12X1.5	-
OP-ES-3620	70.5	M12X1.25	STRAIGHT	16	M12X1.25	22
OP-ES-4746	74	M14X1.5	STRAIGHT	16	M12X1.5	30
OP-ES-4921	112	M14X1.5	ANGLED	14.8	M10X1.5	23
OP-ES-4922	112	M14X1.5	ANGLED	14.8	M10X1.5	23
OP-ES-5377	66	M16X1.5	STRAIGHT	15	M12X1.25	-
OP-ES-5380	66	M16X1.5	STRAIGHT	15	M12X1.25	20
OP-ES-5555	90	M14X1.5	STRAIGHT	15	M12X1.5	21
OP-ES-5557	90	M14X1.5	STRAIGHT	15	M12X1.5	21
OP-ES-5562	66	M16X2	ANGLED	15	M12X1.25	20
OP-ES-5565	66	M16X2	ANGLED	15	M12X1.25	20
OP-ES-5569	66	M12X1.5	STRAIGHT	13.65	M10X1.25	18
OP-ES-5579	74	M14X1.5	STRAIGHT	17	M12X1.5	20.7
OP-ES-5588	233	M14X1.5	STRAIGHT	15	M12X1.5	21
OP-ES-5589	233	M14X1.5	STRAIGHT	15	M12X1.5	21
OP-ES-7415	120	M16X1.5	STRAIGHT	18.1	M12X1.75	37.5
PE-ES-0088	119	M16X1.5	ANGLED	12	M10X1.25	20
PE-ES-0089	119	M16X1.5	ANGLED	12	M10X1.25	20
PE-ES-0664	90	M14X1.5	STRAIGHT	-	-	-
PE-ES-0780	90	M14X1.5	STRAIGHT	12.9	-	-
PE-ES-12631	200	M14X1.5	ANGLED	15	M10X1.25	26.5
PE-ES-12632	200	M14X1.5	ANGLED	15	M10X1.25	26.5
PE-ES-1656	115	M16X1.5	STRAIGHT	15.7	M10X1.25	21
PE-ES-1668	115	M16X1.5	STRAIGHT	15.7	M10X1.25	21
PE-ES-3330	240	M14X1.5	STRAIGHT	14	M10X1.25	-
PE-ES-3331	240	M14X1.5	STRAIGHT	14	M10X1.25	-
PE-ES-4163	209.5	M16X1.5	ANGLED	15.1	M10X1.25	27
PE-ES-4164	209.5	M16X1.5	ANGLED	15.1	M10X1.25	27
PE-ES-5042	75	M14X1.5	STRAIGHT	14	M10X1	-

MOOG	Z9	e9	Q vzx	R9	e>	Z>
PE-ES-5703	90	M14X1.5	ANGLED	14	M10X1.25	18
PE-ES-5721	233	M14X1.5	STRAIGHT	14	M10X1.25	18
PE-ES-5722	233	M14X1.5	STRAIGHT	14	M10X1.25	18
PE-ES-5723	112	M14X1.5	ANGLED	14	M10X1.25	18
PE-ES-5724	112	M14X1.5	STRAIGHT	14	M10X1.25	18
PE-ES-7065	165	M14X1.5	STRAIGHT	15	M10X1.25	22
PE-ES-7066	165	M14X1.5	STRAIGHT	15	M10X1.25	22
PE-ES-7414	78.5	M14X1.5	STRAIGHT	15	M10X1.25	21
PE-ES-8473	240	M14X1.5	ANGLED	17	M12X1.5	24.35
PE-ES-8474	240	M14X1.5	ANGLED	17	M12X1.5	24.35
RE-ES-0426	203	M14X1.5	ANGLED	14.78	M10X1.25	24
RE-ES-0427	203	M14X1.5	ANGLED	14.78	M10X1.25	24
RE-ES-0672	90	M14X1.5	STRAIGHT	14.5	M10X1.25	-
RE-ES-0673	90	M14X1.5	STRAIGHT	14.5	M10X1.25	-
RE-ES-0809	210	M16X1.5	ANGLED	20	M14X1.5	27.5
RE-ES-0810	210	M16X1.5	STRAIGHT	20	M14X1.5	27.5
RE-ES-0852	209	M14X1.5	ANGLED	14.5	M10X1.25	-
RE-ES-0853	209	M14X1.5	ANGLED	14.5	M10X1.25	-
RE-ES-13645	187	M14X1.5	ANGLED	14.6	M10X1.25	25
RE-ES-13646	187	M14X1.5	ANGLED	14.6	M10X1.25	25
RE-ES-15265	181	M14X1.5	ANGLED	14.5	M10X1.25	24
RE-ES-15266	181	M14X1.5	ANGLED	14.5	M10X1.25	24
RE-ES-1562	146	-	STRAIGHT	14.5	M10X1.25	-
RE-ES-1563	146	-	STRAIGHT	14.5	M10X1.25	-
RE-ES-2092	198	M14X1.5	ANGLED	11.7	M10X1.25	28
RE-ES-2093	198	M14X1.5	ANGLED	11.7	M10X1.25	28
RE-ES-3755	213	M14X1.5	ANGLED	12	M10X1.25	26
RE-ES-3756	213	M14X1.5	ANGLED	12	M10X1.25	26
RE-ES-4256	98	M14X1.5	ANGLED	14.6	M10X1.25	22
RE-ES-4273	238	-	-	-	M12X1.25	-
RE-ES-4289	236.5	-	STRAIGHT	13.4	M10X1.25	-
RE-ES-4290	236.5	-	STRAIGHT	13.4	M10X1.25	-
RE-ES-7014	115	M14X1.5	STRAIGHT	14.6	M10X1.25	26.7
RE-ES-7015	115	M14X1.5	STRAIGHT	14.6	M10X1.25	26.7
RE-ES-7023	130	-	STRAIGHT	14.8	M10X1.25	22
RE-ES-7024	130	-	STRAIGHT	14.6	-	22
RE-ES-7026	105	-	STRAIGHT	14.6	M10X1.25	22
RE-ES-7027	105	-	STRAIGHT	14.6	M10X1.25	-
RE-ES-7053	120	-	STRAIGHT	14.6	M10X1.25	-
RE-ES-7054	120	-	STRAIGHT	14.6	M10X1.25	-
RE-ES-7060	165	-	ANGLED	14.6	M10X1.25	22
RE-ES-7061	165	-	ANGLED	14.6	M10X1.25	22
RE-ES-7301	239.5	M14X1.5	ANGLED	19	M12X1.5	27.8
RE-ES-7302	239.5	M14X1.5	ANGLED	19	M12X1.5	27.8
RE-ES-7306	199.5	M14X1.5	ANGLED	14.8	M10X1.25	23.5
RE-ES-7307	199.5	M14X1.5	ANGLED	14.8	M10X1.25	23.5
RE-ES-7856	210.5	M14X1.5	ANGLED	14.9	M10X1.25	23.8
RE-ES-7861	210.5	M14X1.5	ANGLED	14.9	M10X1.25	23.8
RE-ES-8763	221	M14X1.5	ANGLED	11.9	M10X1.25	29.5
RE-ES-8764	-	-	-	-	-	-
RO-ES-0081	67	R.1/2X20H	STRAIGHT	13	M10X1.25	21
RO-ES-0777	95	L M18X1.5	STRAIGHT	17.7	M12X1.5	25.5
RO-ES-0778	1230	M22X1.5	STRAIGHT	17.8	M12X1.25	17.8
RO-ES-1492	87	11/16-16	STRAIGHT	17.55	M12X1.75	30.5
RO-ES-1494	87	11/16-16	STRAIGHT	17.55	M12X1.75	30.5
RO-ES-1982	219	M14X1.5	STRAIGHT	15.6	M10X1.25	19
RO-ES-1983	219	M14X1.5	STRAIGHT	15.6	M10X1.25	19
RO-ES-2034	85	-	STRAIGHT	13.4	M12X1.5	-
RO-ES-3153	-	-	-	-	-	-
RO-ES-3154	-	-	-	-	-	-
RO-ES-3411	67	M12X1.25	STRAIGHT	13	M10X1.25	21

MOOG	Z9	e9	Q vzx	R9	e>	Z>
RO-ES-3547	92	M14X1.5	STRAIGHT	14	M10X1.25	20
SA-ES-4907	434	-		22	M16X2	
SA-ES-4910	434	M16X2	STRAIGHT	20	-	-
SK-ES-8222	80	M12X1	STRAIGHT	14	M12X1.5	-
SU-ES-2870	139	M14X1.5	STRAIGHT	15.4	M12X1.25	17.5
SU-ES-3076	65	M12X1.25	ANGLED	13	M10X1.25	20
SZ-ES-0103	90	M16X1.5	STRAIGHT	14	M12X1.25	19.5
SZ-ES-0613	321	M16X1.5	STRAIGHT	14	M12X1.25	18.5
SZ-ES-0765	80	M12X1.25 RHT	STRAIGHT	14	M12X1.25	18.5
SZ-ES-2292	71	M12X1.25	STRAIGHT	14.6	M12X1.25	22
SZ-ES-2610	274	-	-	-	-	-
SZ-ES-2884	86	M16X1.5	STRAIGHT	14	M12X1.25	22.8
SZ-ES-2885	86	M16X1.5	STRAIGHT	14	M12X1.25	22.8
SZ-ES-2887	175	M14X1.5	ANGLED	14	M12X1.25	23
SZ-ES-2888	175	M14X1.5	ANGLED	14	M12X1.25	23
SZ-ES-2894	180	M12X1.25	ANGLED	14	M12X1.25	23
SZ-ES-3889	180	M12X1.25	ANGLED	14	M12X1.25	23
SZ-ES-7347	82	M14X1.5	STRAIGHT	15	M12X1.25	23
SZ-ES-8478	70	M12X1.25	STRAIGHT	15	M12X1.25	23
TO-ES-0230	130	M14X1.5	ANGLED	15	M10X1.25	-
TO-ES-0231	75	M15X1.5	ANGLED	15	M12X1.25	26.4
TO-ES-0374	190	M14XP1.5	ANGLED	-	M12X1.25	-
TO-ES-0375	190	M14XP1.5	STRAIGHT	-	M12X1.25	-
TO-ES-0509	83	M12X125	STRAIGHT	15	M12X1.25	19.5
TO-ES-0740	-	-	-	-	-	-
TO-ES-0741	-	-	-	-	-	-
TO-ES-10645	180	M16X1.5	ANGLED	16.1	M12X1.25	31.1
TO-ES-10646	180	M16X1.5	ANGLED	16.1	M12X1.25	31.1
TO-ES-10899	186	M14X1.5	ANGLED	15.5	M12X1.25	25
TO-ES-10900	186	M14X1.5	ANGLED	15.5	M12X1.25	25
TO-ES-2382	-	-	-	-	-	-
TO-ES-2977	163	M14X1.5	ANGLED	15	M12X1.25	25
TO-ES-2978	163	M14X1.5	ANGLED	15	M12X1.25	25
TO-ES-2986	145	M16X1.5	ANGLED	12.6	M12X1.25	-
TO-ES-2987	145	M16X1.5	ANGLED	12.6	M12X1.25	-
TO-ES-2990	130	M15X1.5	ANGLED	15	M12X1.25	23.5
TO-ES-2991	130	M15X1.5	ANGLED	15	M12X1.25	24.5
TO-ES-2997	130	M14X1.5	ANGLED	15	M12X1.25	24.5
TO-ES-2998	130	M14X1.5	ANGLED	15	M12X1.25	23.5
TO-ES-3006	190	M15X1.5	ANGLED	15	M12X1.25	24.5
TO-ES-3007	190	M15X1.5	ANGLED	15	M12X1.25	24.5
TO-ES-3016	190	M15X1.5	ANGLED	12.45	M12X1.25	-
TO-ES-3017	190	M15X1.5	ANGLED	12.45	M12X1.25	-
TO-ES-3024	204	M14X1.5	ANGLED	12.6	M12X1.25	28.5
TO-ES-3034	204	M14X1.5	ANGLED	15	M12X1.25	28.5
TO-ES-3306	237	-	-	15	M10X1.5	-
TO-ES-4442	200	M20X1.5	ANGLED	20	M14X1.5	23.5
TO-ES-4443	200	M20X1.5	ANGLED	20	M14X1.5	23.5
TO-ES-4889	148	M16X1.5	STRAIGHT	12.5	M12X1.25	-
TO-ES-4973	84	M15X1.5	STRAIGHT	15.1	M12X1.25	22
TO-ES-4984	107	M17X1.5	STRAIGHT	15.05	R-M10X1.25	-
TO-ES-4985	107	M17X1.5	ANGLED	15.05	R-M10X1.25	-
TO-ES-4989	175	M20X1.5	ANGLED	18.3	M16X1.5	23.5
TO-ES-4990	175.5	M20X1.5	ANGLED	20	M16X1.5	23.5
TO-ES-4996	142	M15X1.5	ANGLED	17	M14X1.5	23
TO-ES-5772	186	M15X1.5	ANGLED	16.1	M12X1.25	-
TO-ES-5773	186	M15X1.5	ANGLED	16.1	M12X1.25	-
TO-ES-6582	197	M16X1.5	ANGLED	16	M12X1.25	25
TO-ES-6583	197	M16X1.5	ANGLED	16	M12X1.25	25
TO-ES-7878	122	M15X1.5	STRAIGHT	16	M14X1.5	20
TO-ES-8835	84	M15X1.5	STRAIGHT	17	M14X1.5	24.5

MOOG	Z9	e9	Q vzk	R9	e>	Z>
TO-ES-8980	84	M15X1.5	STRAIGHT	16	M12X1.25	24.5
VO-ES-0510	94	M14X1.5	ANGLED	12.65	M12X1.5	22.5
VO-ES-0511	94	M14X1.5	ANGLED	12.65	M12X1.5	22.5
VO-ES-10703	94	M16X1.5	ANGLED	16.4	M12X1.5	24
VO-ES-10704	94	M16X1.5	ANGLED	16.4	M12X1.5	24
VO-ES-14747	94	M14X1.5	STRAIGHT	17	M12X1.5	25
VO-ES-14748	94	M14X1.5	STRAIGHT	17	M12X1.5	25
VO-ES-1506	92	M14X1.5	ANGLED	16	M12X1.5	25
VO-ES-1507	92	M14X1.5	ANGLED	16	M12X1.5	25
VO-ES-1868	95	M16X1.5	ANGLED	16.4	M12X1.5	23.5
VO-ES-1869	95	M16X1.5	ANGLED	16.4	M12X1.5	23.5
VO-ES-2314	236	M16X1.5	ANGLED	20.23	M14X1.5	-
VO-ES-2315	236	M16X1.5	ANGLED	20.23	M14X1.5	-
VO-ES-2404	85	M16X1.5	ANGLED	16	M12X1.5	-
VO-ES-2405	85	M16X1.5	ANGLED	16	M12X1.5	-
VO-ES-3058	89	M16X1.5	ANGLED	20.2	M14X1.5	28
VO-ES-3059	89	M16X1.5	ANGLED	20.2	M14X1.5	28
VO-ES-7106	75	M14X1.5	STRAIGHT	14	M12X1.5	23.5
VO-ES-7139	75	M14X1.5	STRAIGHT	14	M12X1.5	23.5
VO-ES-8227	152	M14X1.5	STRAIGHT	17.5	M8X1.25	-
VO-ES-8246	75	M14X1.5	ANGLED	14	M12X1.5	23.5
VO-ES-8247	75	M14X1.5	ANGLED	14	M12X1.5	23.5
VO-ES-8258	222	M14X1.5	ANGLED	16.6	M12X1.5	-
VO-ES-8259	222	M14X1.5	ANGLED	16.6	M12X1.5	-
VO-ES-8283	75	M14X1.5	ANGLED	16	M12X1.5	25
VO-ES-8285	75	M14X1.5	ANGLED	16	M12X1.5	25
VV-ES-1090	233	M14X1.5	ANGLED	-	M12X1.75	32.5
VV-ES-1091	233	M14X1.5	ANGLED	-	M12X1.75	32.5
VV-ES-13895	109.5	M16X1.5	STRAIGHT	18	M10X1.5	21
VV-ES-13896	109.5	M16X1.5	STRAIGHT	18	M10X1.5	21
VV-ES-2239	90	M14X1.5	STRAIGHT	14.75	M10X1.25	-
VV-ES-2240	90	M14X1.5	STRAIGHT	14.75	M10X1.25	-
VV-ES-2858	233	M14X2	ANGLED	16.6	M12X1.75	22.5
VV-ES-3146	233	M14X2	ANGLED	16.6	M12X1.75	29
VV-ES-3283	75	M14X2	STRAIGHT	14	M12X1.5	20
VV-ES-4019	258	M14X1.5	ANGLED	15	M12X1.5	-
VV-ES-4021	258	M14X1.5	ANGLED	15	M12X1.5	-
VV-ES-5548	180	M14X2	ANGLED	13.1	M12X1.5	-
VV-ES-5549	180	M14X2	ANGLED	13.1	M12X1.5	-

A

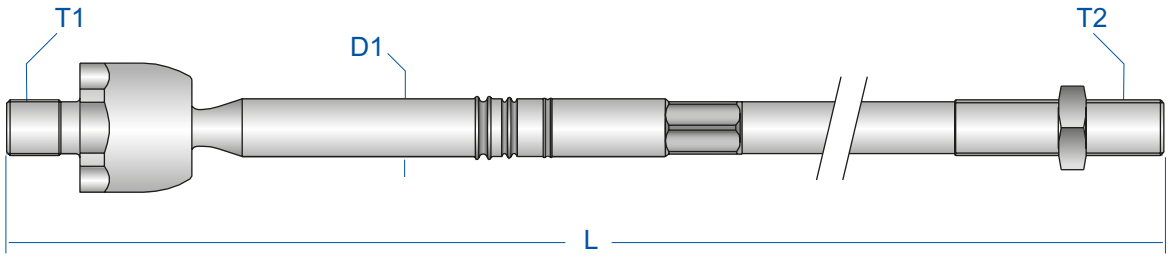

B

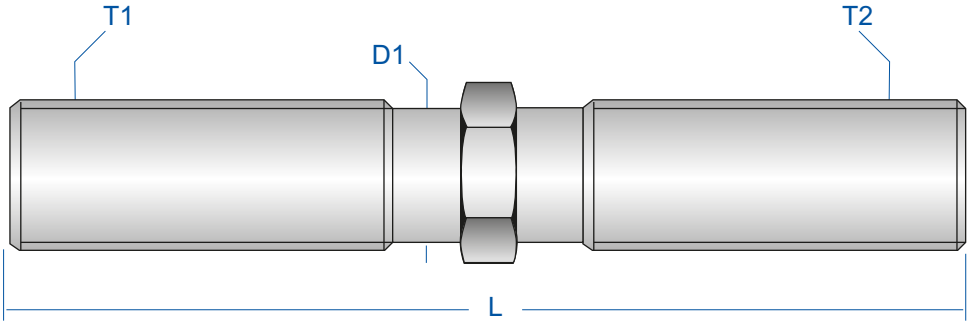

C

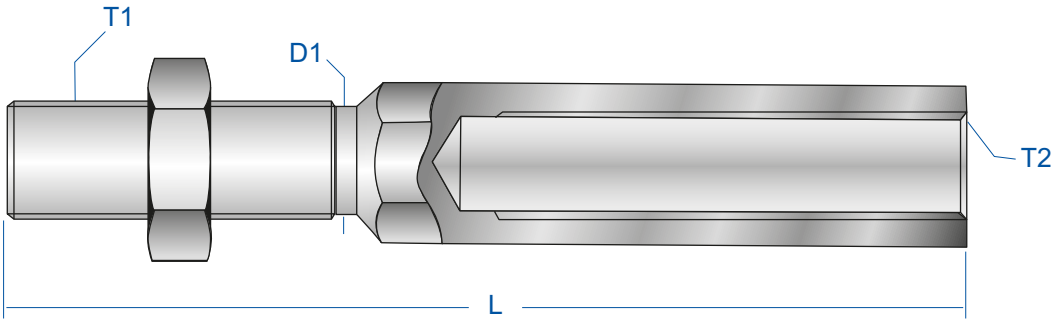

D

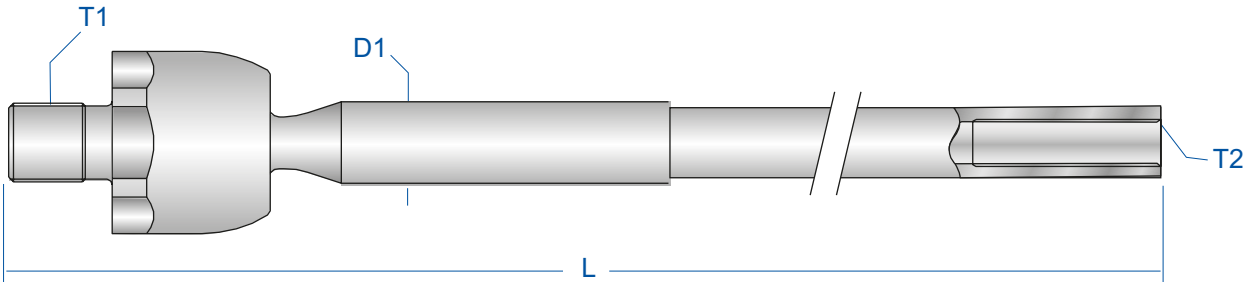

E

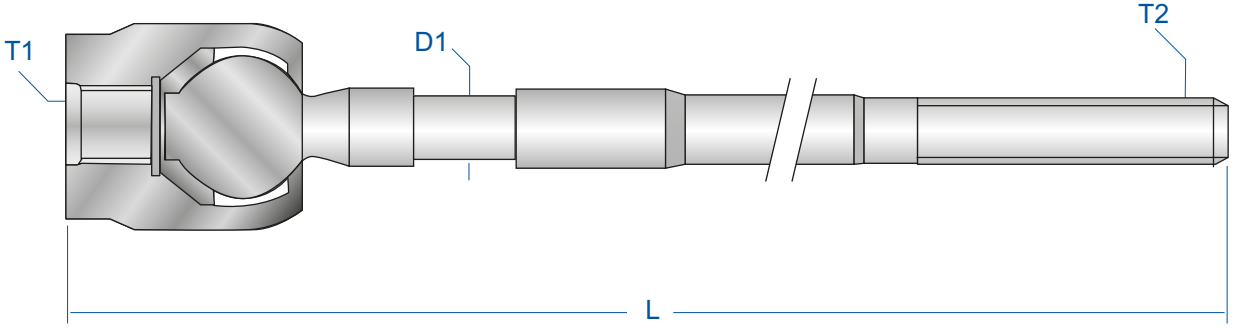

MOOG

MOOG	Z9	R9	e9	e>	
AL-AX-1223	218	30	M16X1.5	M14X1.5	A
AL-AX-1435	234.7	14	M16X1.5	M14X1.5	A
AL-AX-1681	299.5	13	M14X1.5	M12X1.5	A
AL-AX-1699	308	-	M14X1.5	M14X1.5	A
AL-AX-5416	230.5	24	M16X1.5	M20X1.5	A
AU-AX-12545	251.5	16	M16X1.5	M16X1.5	A
AU-AX-15387	231	16	M16X1.5	M16X1.5	A
AU-AX-4428	143	24	M16X1.5	M16X1.5	C
AU-AX-4712	139.5	-	M16X1.5	M14X1.5	C
AU-AX-5193	241.5	16	M16X1.5	M16X1.5	A
AU-AX-6982	352.5	17.5	M16X1.5	M16X1.5	A
BM-AX-0359	227	14.5	M18X1.5	M14X1.5	A
BM-AX-10978	269	16	M16X1.5	M14X1.5	A
BM-AX-13425	229	16.5	M16X1.5	M16X1.5	A
BM-AX-13875	247.5	17	M16X1.5	M14X1.5	A
BM-AX-14877	235	15.2	M14X1.5	M14X1.5	A
BM-AX-14892	240.5	17.3	M16X1.5	M14X1.5	A
BM-AX-15218	217	16	M18X1.5	M14X1.5	A
BM-AX-1843	194.5	17	M18X1.5	M16X1	A
BM-AX-1877	201	-	M16X1.5	M14X1.5	A
BM-AX-2426	241	18	M18X1.5	M14X1.5	A
BM-AX-2436	252	16	M18X1.5	M16X1.5	A
BM-AX-3683	262	-	M18X1.5	M16X1.5	A
BM-AX-3730	262.5	15	M18X1.5	M14X1.5	A
BM-AX-3731	262	14.5	M18X1.5	M14X1.5	A
BM-AX-4342	227	10.5	M14X1.5	M18X1.5	A
BM-AX-5603	212.6	12.9	M14X1.5	M14X1.5	A
BM-AX-5622	242	14.9	M18X1.5	M14X1.5	-
BM-AX-8789	267	16.5	M18X1.5	M14X1.5	A
BM-AX-8885	282.5	16.7	M18X1.5	M14X1.5	A
CH-AX-0314	309	13.4	M14X1.5	M14X1.5	E
CI-AX-0537	132	-	M16X1.5	M14X1.5	C
CI-AX-0863	198.5	19.5	M16X1.5	M16X1.5	D
CI-AX-13643	244	17.3	M12X1	M16X1.5	A
CI-AX-14830	237	14.5	M14X1.5	M14X1.5	A
CI-AX-1707	350	16	M12X1	M14X1.5	E
CI-AX-2467	325	-	M14X1.5	M14X1.5	A
CI-AX-3361	359	18	M12X1	M14X1.5	D
CI-AX-3991	358	18	M14X1.5	M14X1.5	D
CI-AX-5060	239	-	M14X1.5	M12X1.25	A
CI-AX-5169	322	-	M16X1.5	M14X1.5	A
CI-AX-5690	331.3	16.2	M14X1.5	M16X1.5	-
CI-AX-7320	277	15.5	M16X1.5	M16X1.5	A
CI-AX-7879	287	16	M14X1.5	M14X1.5	A
CI-AX-8762	146	13	M16X1.5	M14X1.5	A
CI-AX-8851	261	14.2	M12X1	M14X1.5	A
DE-AX-0447	279.5	14.5	M16X1.5	M12X1.5	A
DE-AX-10652	262	14.3	M14X1.5	M12X1.25	A
DE-AX-1773	267.1	13	M15X1.5	M12X1.5	A
DE-AX-1821	343.6	14.5	M16X1.5	M14X1.5	A
DE-AX-1822	306.8	14.5	M16X1	M14X1.5	A
DE-AX-2470	255.5	16	M16X1.5	M14X1.5	A
DE-AX-2474	175	8	M16X1.5	M12X1.5	A
DE-AX-2479	375	14.5	M16X1.5	M14X1.25	A
DE-AX-5636	298.5	14	M16X1.5	M14X1.5	-
DE-AX-5752	353.5	16	M16X1.5	M14X1.5	A
DE-AX-8886	377	14.5	M16X1.5	M14X1.5	A
DI-AX-2480	119.5	14.5	M11X1.5	M12X1.25	A
DI-AX-2481	201	14.5	M11X1.5	M12X1.25	A
DI-AX-2482	234	13	M12X1.25	M12X1.25	A
DI-AX-2501	311	14.5	M14X1.5	M14X1.5	A

MOOG	Z9	R9	e9	e>	
FD-AX-0007	335.5	13.5	M14X1.5	M14X2	A
FD-AX-0026	322.5	13.5	M14X1.5	M14X2	A
FD-AX-0270	312	-	M14X1.5	1/2X20	A
FD-AX-0470	369	18	M14X1.5	M16X1.5	A
FD-AX-13617	401	18	M16X1.5	M16X1.5	A
FD-AX-1537	357.5	13	M14X1.5	M14X2	A
FD-AX-2197	354	-	M16X1.5	M14X1.5	A
FD-AX-2258	292	14.4	M14X1.5	M14X1.5	A
FD-AX-2382	326	16.5	M14X1.5	M16X1.5	A
FD-AX-2526	400	14.5	M20X1.5	M16X1.5	A
FD-AX-2527	399	14.5	M16X1.5	M16X1.5	A
FD-AX-3388	412.4	15.5	M16X1.5	M16X1.5	A
FD-AX-3957	298.5	16.2	M14X1.5	M16X1.5	A
FD-AX-4145	338	17.5	M14X1.5	M16X1.5	A
FD-AX-4146	339	17.5	M14X1.5	M16X1.5	A
FD-AX-4153	322	14.5	M14X1.5	M14X2	A
FD-AX-4851	307	15.6	M14X1.5	M16X1.5	A
FD-AX-5110	335	24.2	M16X1.5	M18X1.5	A
FD-AX-7388	312.5	-	M14X1.5	M14X1.5	A
FD-AX-8855	307	17	M14X1.5	M16X1.5	A
FI-AX-0086	285	12.5	M16X1.5	M12X1.5	A
FI-AX-0087	277	12.5	M14X1.5	M12X1.5	A
FI-AX-10827	314	15	M18X1.5	M14X1.5	A
FI-AX-10883	352	14	M16X1	M14X1.5	A
FI-AX-1232	284	-	M14X1.5	M12X1.5	A
FI-AX-1461	320	14	M14X1.5	M14X1.5	A
FI-AX-1751	300	-	M14X1.5	M14X1.5	A
FI-AX-1839	277	-	M14X1.5	M12X1.5	A
FI-AX-2503	317	14	M14X1.5	M14X1.5	E
FI-AX-2504	346	14.7	M16X1.5	M14X1.5	A
FI-AX-2518	300	-	M14X1.5	M14X1.5	A
FI-AX-3120	279.5	12	M14X1.5	M12X1.5	E
FI-AX-3826	242	12	M14X1.5	M12X1.5	A
FI-AX-3853	217	-	M14X1.5	M14X1.5	E
FI-AX-3974	310	16	M16X1.5	M14X1.5	A
FI-AX-4197	279.5	14.5	M14X1.5	M14X1.5	A
FI-AX-4198	281	14.5	M16X1.5	M14X1.5	A
FI-AX-4431	299.5	14.5	M16X1.5	M14X1.5	A
FI-AX-4868	206	-	M14X1.5	M14X1.5	A
FI-AX-5092	264	-	M14X1.5	M14X1.5	A
FI-AX-5156	280	14.4	M16X1.5	M14X1.5	A
FI-AX-5694	255	-	M14X1.5	M12X1.5	A
FI-AX-7508	285	12	M12X1.25	M12X1.5	E
FI-AX-7528	332	-	M16X1.5	M16X1.5	A
HO-AX-10125	149	13.5	M18X1.5	M14X1.5	A
HO-AX-10513	254	16	M18X1.5	M14X1.5	A
HO-AX-12633	227	16	M18X1.5	M12X1.25	A
HO-AX-12634	227	16	M18X1.5	M12X1.25	A
HO-AX-13311	190.8	20	M20X1.5	M14X1.5	A
HO-AX-14642	256.5	16	M16X1	M14X1.5	A
HO-AX-1625	192.5	12	M14X1.5	M14X1.5	A
HO-AX-1781	158	13.5	M12X1.25	M14X1.5	A
HO-AX-2538	168	-	M12X1.25	M14X1.5	A
HO-AX-2569	220	16	M12X1.25	M14X1.5	A
HO-AX-2580	231	14.5	M16X1	M12X1.25	A
HO-AX-2581	231	14.5	M16X1	M12X1.25	A
HO-AX-2589	324.5	13	M14X1.5	M12X1.25	A
HO-AX-3844	500	22	M14X1.5	M14X1.5	A
HO-AX-5075	143.3	14.6	M18X1.5	M14X1.5	A
HO-AX-5447	161.5	15	M16X1.5	M14X1.5	A
HO-AX-5528	545	22	M14X1.5	M14X1.5	A

MOOG	Z9	R9	e9	e>	
HO-AX-8738	334	16	M16X1	M14X1.5	A
HY-AX-0009	281.5	13	M14X1.5	M12X1.25	A
HY-AX-0969	319	14	M16X1.5	M14X1.5	A
HY-AX-0971	282.5	13	M14X1.5	M12X1.25	A
HY-AX-10587	195.5	16.5	M16X1.5	M16X1.5	D
HY-AX-10810	201.7	16.2	M16X1.5	M16X1.5	A
HY-AX-13278	214.5	16	M14X1.5	M14X1.5	A
HY-AX-14980	341	16	M16X1.5	M14X1.5	A
HY-AX-15338	214.5	16	M14X1.5	M14X1.5	A
HY-AX-1718	335	14	M16X1.5	M14X1.5	A
HY-AX-1818	339.8	14	M16X1.5	M14X1.5	A
HY-AX-1819	188.5	17	M16X1.5	M14X1.5	A
HY-AX-1820	320	13.5	M16X1.5	M14X1.5	A
HY-AX-2432	214.6	17.6	M16X1.5	M16X1.5	-
HY-AX-2615	317.5	14.5	M16X1.5	M14X1.5	A
HY-AX-2620	333	14.5	M16X1.5	M14X1.5	A
HY-AX-2628	347	14	M16X1.5	M14X1.5	A
HY-AX-2632	343	14.5	M16X1.5	M14X1.5	A
HY-AX-2646	334.5	15.5	M14X1.5	M16X1.5	A
HY-AX-3892	262.5	16.3	M16X1.5	M16X1.5	A
HY-AX-7080	214	15.4	M16X1.5	M14X1.5	A
HY-AX-7293	309	15.5	M16X1.5	M14X1.5	A
HY-AX-8358	316.5	16	M16X1.5	M12X1.25	A
HY-AX-8894	242	17.6	M16X1.5	M16X1.5	A
HY-AX-8897	257	16.5	M18X1.5	M14X1.5	A
HY-AX-8898	257	16.5	M18X1.5	M14X1.5	A
JA-AX-10755	295	14	13/16"-20UNF	M14X1.5	E
JA-AX-4433	359	17	-	M14X1.5	A
KI-AX-10103	-	-	-	-	-
KI-AX-10615	249	16	M16X1.5	M16X1.5	A
KI-AX-2330	296.5	12.5	M16X1.5	M12X1.25	A
KI-AX-2331	297	12.5	M16X1.5	M12X1.25	A
KI-AX-2669	262	16	M17X1	M14X1.5	A
KI-AX-2671	324.5	16	M17X1	M14X1.5	A
KI-AX-4199	306	16	M16X1.5	M12X1.25	A
KI-AX-4407	199.2	15.1	M14X1.5	M18X1.5	A
KI-AX-4409	186.5	16	M18X1.5	M14X1.5	A
KI-AX-4424	294.5	16.5	M17X1	M14X1.5	A
KI-AX-4432	186	16	-	M14X1.5	A
KI-AX-5145	310	14.5	M16X1.5	M12X1.25	A
KI-AX-7089	184.5	14.5	M16X1.5	M14X1.5	A
KI-AX-8937	-	-	-	-	-
LA-AX-10773	95	16	M18X1.5	M18X1.5	B
LA-AX-10797	428.5	-	-	-	-
LA-AX-12622	428.5	-	-	-	-
LA-AX-13934	63	-	M24X1.5	M18X1.5	C
LN-AX-2677	216	14.5	M14X1.5	M14X1.5	E
LN-AX-3904	292.5	13.8	M14X1.5	M14X1.5	A
LN-AX-4421	284	-	M14X1.5	M14X1.5	A
LN-AX-4758	259	12	M14X1.5	M12X1.5	A
LR-AX-13410	315	19	M16X1.5	M18X1.5	A
LR-AX-13965	345	14.5	M16X1.5	M14X1.5	A
LR-AX-3661	382	16	M16X1.5	M16X1.5	A
LR-AX-4212	252	16	M18X1.5	M16X1.5	A
LR-AX-5020	391	14.7	M20X1.5	M16X1.5	A
LR-AX-5021	391	14.7	M20X1.5	M16X1.5	A
MD-AX-0010	199.5	-	M18X1.5	M14X1.5	A
MD-AX-13906	303.5	16.5	M14X1.5	M14X1.5	A
MD-AX-14929	230	16	M14X1.5	M14X1.5	A
MD-AX-15089	236	18	M14X1.5	M14X1.5	A
MD-AX-1687	309.6	13	M16X1.5	M14X1.5	A

MOOG	Z9	R9	e9	e>	
MD-AX-1716	281	12	M16X1.5	M12X1.25	A
MD-AX-1808	325	12.5	M17X1	M12X1.25	A
MD-AX-2216	323	-	M14X1.5	M12X1.25	A
MD-AX-2218	323	16	M16X1	M14X1.5	A
MD-AX-2348	324.5	16	M14X1.5	M18X1.5	A
MD-AX-2685	297	12.8	M16X1.5	M12X1.25	A
MD-AX-2692	297	12.8	M16X1.5	M12X1.25	A
MD-AX-2700	320.5	13	M16X1	M12X1.25	A
MD-AX-2701	319	13	M16X1	M12X1.25	A
MD-AX-2710	333	14.5	M16X1.5	M14X1.5	A
MD-AX-3072	341.5	16	M16X1	M12X1.25	A
MD-AX-3888	308	16.5	M17X1.5	M14X1.5	A
MD-AX-3973	288.5	18	M17X1	M14X1.5	A
MD-AX-8887	182.5	17	M18X1.5	M14X1.5	A
ME-AX-0979	174.5	-	M16X1.5	M16X1.5	A
ME-AX-10146	253.5	14.5	M16X1.5	M14X1.5	A
ME-AX-13322	222	16	M14X1.5	M14X1.5	A
ME-AX-13694	225	14.6	M16X1.5	M14X1.5	A
ME-AX-13792	236.5	14.5	M16X1.5	M14X1.5	A
ME-AX-13817	287	16.5	M16X1.5	M16X1.5	A
ME-AX-13995	377	14.5	M14X1.5	M12X1.5	A
ME-AX-14590	262	16.7	M16X1.5	M14X1.5	A
ME-AX-1530	218	14.5	M14X1.5	M121.5	A
ME-AX-15337	247.5	14.5	M16X1.5	M14X1.5	A
ME-AX-2071	201.5	-	-	M14X1.5	E
ME-AX-2073	201.5	-	-	M14X1.5	E
ME-AX-2266	257	-	M16X1.5	M14X1.5	A
ME-AX-2754	213	-	M14X1.5	M14X1.5	A
ME-AX-4190	302.5	17.9	M16X1.5	M16X1.5	A
ME-AX-4874	416	17.5	M18X1.5	M16X1.5	A
ME-AX-5173	280	-	M16X1.5	M14X1.5	A
ME-AX-5596	223	14.5	M16X1.5	M14X1.5	A
ME-AX-5674	276	15.8	M16X1.5	M14X1.5	A
ME-AX-5684	206	-	-	M14X1.5	A
ME-AX-6338	206.5	13.9	M16X1.5	M14X1.5	A
ME-AX-6341	339.5	16.3	M16X1.5	M16X1.5	A
ME-AX-6343	397	15	M16X1.5	M16X1.5	A
ME-AX-7294	278.5	15	M16X1.5	M14X1.5	A
ME-AX-7769	259	-	M16X1.5	M14X1.5	A
ME-AX-8002	223.3	15.6	M16X1.5	M14X1.5	A
MI-AX-0620	315	14	R-M16X1.5	R-M14X1.5	A
MI-AX-1299	246.8	14.2	M16X1.5	M14X1.5	A
MI-AX-2771	327	16	M16X1.5	M12X1.25	A
MI-AX-3325	271	14	M16X1.5	M12X1.25	A
MI-AX-4438	328	14.5	M14X1.5	M12X1.25	A
MI-AX-4444	224.5	20	M16X1.5	M16X1.5	A
MI-AX-4854	364	14.4	M16X1.5	M16X1.5	A
MI-AX-7305	328.5	15.5	M16X1.5	M12X1.25	A
MI-AX-8352	217.5	21	M16X1.5	M16X1.5	A
MI-AX-8439	206	18	M16X1.5	M16X1.5	A
MI-AX-8440	338	14	M16X1	M14.5	A
MI-AX-8441	338	14	M16X1	M14.5	A
NI-AX-1268	275	12	M16X1	M12X1.25	A
NI-AX-13359	242	16	M14X1.5	M12X1.25	A
NI-AX-13635	217	16	M16X1	M12X1.25	A
NI-AX-1603	292.5	15	M16X1	M12X1.25	A
NI-AX-2219	263	14.5	M12X1.6	M14X1.5	A
NI-AX-2304	328	15.5	M16X1	M14X1.5	A
NI-AX-2782	286.5	14	M16X1.6	M14X1.5	A
NI-AX-2797	298	14	M18X1.5	M12X1.25	A
NI-AX-2809	328	14.5	M16X1	M14X1.5	A

MOOG	Z9	R9	e9	e>	
NI-AX-4259	304.5	16.5	M16X1	M14X1.5	A
NI-AX-4852	264	15.3	M16X1	M14X1.5	A
NI-AX-4923	221	18	M20X1	M16X1.5	A
NI-AX-7248	335.5	-	M14X1.5	M12X1.25	A
NI-AX-7337	249	18	M22X1.5	M14X1.5	A
NI-AX-8456	215	14.5	M14X1.5	M12X1.25	A
NI-AX-9063	291	16	M14X1.5	M12X1.25	A
OP-AX-0432	312	11	M14X1.5	M12X1.5	E
OP-AX-0611	105	14	M16X2	M16X2	B
OP-AX-0659	95	14	M16X1.5	M16X1.5	B
OP-AX-10486	-	-	-	-	-
OP-AX-1230	300	-	M16X1.5	M14X1.5	A
OP-AX-13415	303	16	M14X1.5	M14X1.5	A
OP-AX-13418	348	15	M14X1.5	M14X1.5	A
OP-AX-13452	312	16	M16X1.5	M16X1.5	A
OP-AX-13623	241	16.5	M16X1.5	M16X1.5	A
OP-AX-13624	253	17.5	M16X1.5	M16X1.5	A
OP-AX-14766	313	16.6	M16X1.5	M16X1.5	A
OP-AX-1893	332	14.4	M14X1.5	M14X1.5	E
OP-AX-1894	333	12.5	M14X1.5	M14X1.5	A
OP-AX-2083	302.5	15	M18X1.5	M14X1.5	A
OP-AX-2194	265	14.5	M14X1.5	M12X1.25	A
OP-AX-2816	303.5	13.5	M18X1.5	M14X1.5	A
OP-AX-2817	294	-	M16X1.5	M14X1.5	A
OP-AX-3537	330.5	14.5	M14X1.5	M14X1.5	A
OP-AX-3814	304	15	M14X1.5	M14X1.5	A
OP-AX-4160	306.5	16	M14X1.5	M14X1.5	A
OP-AX-4162	289	14	M18X1.5	M14X1.5	A
OP-AX-5162	295	12.5	M16X1.5	M14X1.5	A
OP-AX-5163	292	14.5	M16X1.5	M14X1.5	A
OP-AX-5576	324.5	11	M14X1.5	M12X1.5	E
OP-AX-5577	295.5	11	M14X1.5	M12X1.5	A
OP-AX-5581	360	14	M16X1.5	M14X1.5	A
OP-AX-5689	285	14	M18X1.5	M14X1.5	-
OP-AX-5691	321	11	M14X1.5	M12X1.5	-
OP-AX-7221	375	16	M16X1.5	M14X1.5	A
OP-AX-7452	316	12	M14X1.5	M12X1.25	E
OP-AX-7768	323.5	17.6	M18X1.5	M16X1.5	A
OP-AX-8746	294.5	16	M18X1.5	M14X1.5	A
OP-AX-8747	296	16	M18X1.5	M14X1.5	A
OP-AX-8848	305.9	16	M16X1.5	M16X1.5	A
PE-AX-0645	330	20	M12X1	M16X1.5	A
PE-AX-0847	314	22	M16X1.5	M16X1.5	D
PE-AX-0860	340.5	18	M14X1.5	M14X1.5	D
PE-AX-0862	309.5	19.5	M16X1.5	M16X1.5	D
PE-AX-12630	238.8	14.5	M12X1	M14X1.5	A
PE-AX-12660	225	14.4	M18X1.5	M14X1.5	D
PE-AX-13279	359	16.9	M14X1.5	M14X1.5	A
PE-AX-13634	254	17.5	M12 X1	M16 X 1.5	A
PE-AX-14704	201	14.5	M14X1.5	M14X1.5	A
PE-AX-1570	318.5	17	M14X1.5	M14X1.5	E
PE-AX-2059	255	13	M12X1	M14X1.5	A
PE-AX-3327	105.5	26	M16X.5	M14X1.5	A
PE-AX-3915	310.5	19	M12X1	M16X1.5	D
PE-AX-4740	228	16	M12X1	M16X1.5	A
PE-AX-5047	319.5	12	M14X1.5	M14X1.5	A
PE-AX-5747	200	12	M12X1	M14X1.5	A
PE-AX-5749	332	18	M12X1	M14X1.5	D
PE-AX-6901	313	12	M14X1.5	M12X1	D
PE-AX-6907	373	18	M12X1	M14X1.5	D
PE-AX-7067	293	-	M14X1.5	M14X1.5	A

MOOG	Z9	R9	e9	e>	
PE-AX-7426	355	16.6	M14X1.5	M14X1.5	A
PE-AX-7969	280	-	M14X1.5	M14X1.5	A
RE-AX-0380	292	-	M12X1	M14X1.5	A
RE-AX-0589	317	12	M12X1	M14X1.5	A
RE-AX-0602	245	12	M14X1.5	M12X1	A
RE-AX-0675	276	12	M12X1	M14X1.5	A
RE-AX-0676	270.5	12	M14X1.5	M14X1.5	A
RE-AX-0854	256	-	M12X1	M14X1.5	A
RE-AX-0855	240	-	M14X1.5	M14X1.5	A
RE-AX-0858	303.5	-	M14X1.5	M14X1.5	A
RE-AX-0859	311	-	M12X1	M14X1.5	A
RE-AX-1060	232	14	M12X1	M14X1.5	A
RE-AX-10820	334.7	12	M16X1.5	M14X1.5	A
RE-AX-13416	246	14.4	M16X1.5	M14X1.5	A
RE-AX-13417	211	14.4	M14X1.5	M14X1.5	A
RE-AX-13462	344	14.5	M12X1	M14X1.5	A
RE-AX-14777	214	15.5	M14X1.5	M14X1.5	A
RE-AX-15262	253	16	M18X1.5	M14X1.5	A
RE-AX-1564	256	12	M12X1	M14X1.5	A
RE-AX-1616	281	-	M12X1	M14X1.5	A
RE-AX-2039	272	18	M12X1	M14X1.5	D
RE-AX-2087	280.5	13	M12X1	M14X1.5	A
RE-AX-2091	229.5	14	M14X1.5	M14X1.5	A
RE-AX-2097	196	-	M14X1.5	M16X1.5	A
RE-AX-2103	321.5	14.5	M14X1.5	M14X1.5	A
RE-AX-2374	274.6	-	M12X1	M14X1.5	A
RE-AX-2831	265	14.5	M12X1	M14X1.5	A
RE-AX-3760	210.5	14.5	M12X1	M14X1.5	A
RE-AX-3851	318	12	M12X1	M14X1.5	A
RE-AX-4014	210.5	12	M14X1.5	M14X1.5	A
RE-AX-4280	313	18	M12X1	M14X1.5	D
RE-AX-4298	274	18	M12X1.5	M14X1.5	D
RE-AX-5087	336	12	M12X1	M14X1.5	A
RE-AX-7020	316	15	M12X1	M14X1.5	A
RE-AX-7046	309.3	12	M12X1	M14X1.5	A
RE-AX-7056	283	12	M12X1	M14X1.5	A
RE-AX-7300	229.5	14.5	M14X1.5	M14X1.5	A
RE-AX-7303	205	16	M14X1.5	M14X1.5	A
RE-AX-7756	275	14.5	M12X1	M14X1.5	A
RE-AX-8103	321	-	M12X1	M14X1.5	A
RE-AX-8765	221	16	M16X1.5	M14X1.5	A
RO-AX-2843	319	-	M14X1.5	M14X1.5	A
SA-AX-7091	300	-	M16X1.5	M14X1.5	A
SA-AX-7754	303	16.2	M18X1.5	M14X1.5	A
SE-AX-0091	210.5	12.5	M14X1.5	M14X1.5	A
SK-AX-0064	355.5	14.5	M14X1.5	M12X1	A
SK-AX-2851	363.5	14.5	M14X1.5	M12X1	E
SU-AX-10838	342.5	16	M16X1.5	M14X1.5	A
SU-AX-14768	300	16	M14X1.5	M14X1.5	A
SU-AX-2866	309	-	M14X1.5	M14X1.5	A
SU-AX-2869	309.5	14.5	M14X1.5	M14X1.5	A
SZ-AX-10544	246.8	11.5	M14X1.5	M12X1.25	E/A
SZ-AX-2872	245	14.5	M16X1	M14X1.5	A
SZ-AX-2875	315	13	M14X1.5	M12X1.25	A
SZ-AX-2886	248	13	M14X1.5	M12X1.25	A
SZ-AX-2891	235	14.5	M12X1.25	M14X1.5	E
SZ-AX-5082	324.3	12.5	M18X1.5	M12X1.25	A
SZ-AX-7319	362	16	M18X1.5	M14X1.5	A
TO-AX-0619	254	18	R-M14X1.5	R-M15X1.5	A
TO-AX-10446	315	16	M14X1.5	M15X1.5	A
TO-AX-1280	259	12.5	M16X1.5	M14X1.5	A

MOOG	Z9	R9	e9	e>	
TO-AX-14616	250	18	M14X1.5	M14X1.5	A
TO-AX-1636	339.6	15.5	M14X1.5	M14X1.5	A
TO-AX-1637	283.5	14.5	M12X1.5	M12X1.25	A
TO-AX-1640	329.6	15.5	M14X1.5	M14X1.5	A
TO-AX-1740	254.6	13	M14X1.5	M12X1.25	A
TO-AX-2975	291	17	M14X1.5	M14X1.5	A
TO-AX-2979	290	14.5	M14X1.5	M14X1.5	A
TO-AX-2982	307	16	M14X1.5	M16X1.5	A
TO-AX-2994	314.5	16	M14X1.5	M15X1.5	A
TO-AX-2999	320	14.5	M14X1.5	M14X1.5	A
TO-AX-3008	253	15	M14X1.5	M14X1.5	A
TO-AX-3014	131	30	M18X1.5	M20X1.5	D
TO-AX-3015	255	18	M14X1.5	M15X1.5	A
TO-AX-3018	230	18	M14X1.5	M14X1.5	A
TO-AX-3321	355	18	M14X1.5	M15X1.5	A
TO-AX-3983	276.5	16.5	M15X1.5	M15X1.5	A
TO-AX-4972	321.5	18	M14X1.5	M16X1.5	A
TO-AX-4987	214.5	21	M18X1.5	M20X1.5	A
TO-AX-4988	224.5	21.5	M28X1.5	M20X1.5	A
TO-AX-7449	256	15.5	M14X1.5	M14X1.5	A
TO-AX-7874	291	18	M14X1.5	M15X1.5	A
TO-AX-8836	309.5	18	M14X1.5	M15X1.5	A
VO-AX-0358	184	12.5	M14X1.5	M14X1.5	A
VO-AX-0383	362	13.5	M14X1.5	M14X1.5	A
VO-AX-12501	322	14.4	M14X1.5	M14X1.5	D
VO-AX-1282	319.6	13	M22X1.5	M14X1.5	E
VO-AX-13381	352	16.6	M16X1.5	M16X1.5	A
VO-AX-14746	330	14.5	M14X1.5	M14X1.5	A
VO-AX-14749	311.5	16	M16X1.5	M14X1.5	A
VO-AX-1715	330	14	M22X1.5	M14X1.5	A
VO-AX-1812	330.6	13	M22X1.5	M14X1.5	E
VO-AX-1867	332	16	M16X1.5	M16X1.5	A
VO-AX-2313	193	16.6	M16X1.5	M16X1.5	A
VO-AX-2408	326	13	M14X1.5	M14X1.5	A
VO-AX-2409	354	14.5	M16X1.5	M16X1.5	A
VO-AX-3054	305	16.7	M16X1.5	M16X1.5	A
VO-AX-7107	367.7	13	M12X1.5	M14X1.5	E
VO-AX-7138	361	13	M14X1.5	M14X1.5	A
VO-AX-7181	394	30	M22X1.5	M14X1.5	E
VO-AX-7183	389.5	13	M14X1.5	M14X1.5	A
VO-AX-8275	324	-	M14X1.5	M14X1.5	A
VO-AX-8286	358	14	M16X1.5	M14X1.5	A
VO-AX-8291	147.8	10.2	M16X1.5	M14X1.5	A/C
VV-AX-0027	328.5	12	M16X1.5	M12X1.25	A
VV-AX-0398	141	14.7	M16X1.5	M14X1.5	A
VV-AX-2241	341	-	M16X1.5	M14X1.5	A
VV-AX-3147	153	14	M16X1.5	M14X2	A
VV-AX-3518	201	13	M16X1.5	M14X2	A
VV-AX-5530	313	13	M16X1.5	M14X2	A
VV-AX-5539	308.5	13	M14X1.5	M14X2	A
VV-AX-5551	178	-	M14X1.5	M14X2	A
VV-AX-7868	150	15.5	M16X1.5	M14X1.5	A
VV-AX-8739	321	18	M16X1.5	M18X1.5	A
VV-AX-8832	333.3	18	M16X1.5	M18X1.5	A
VV-AX-9950	241.5	12.5	M14X1.5	M14X2	A

Y9C8889

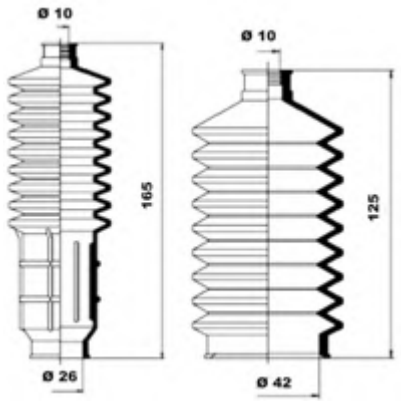

Y9C888G

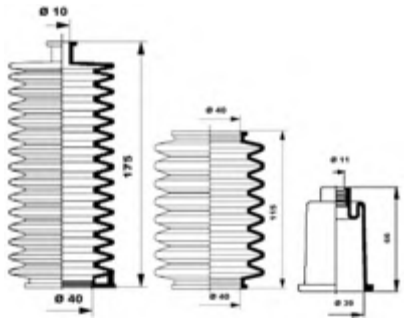

Y9C889B

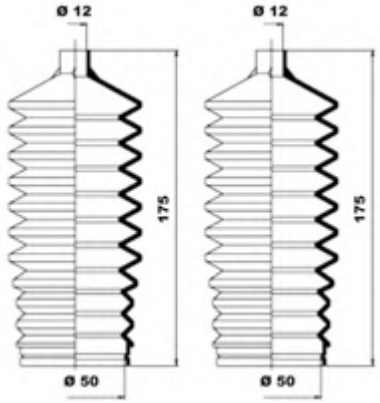

Y9C888C

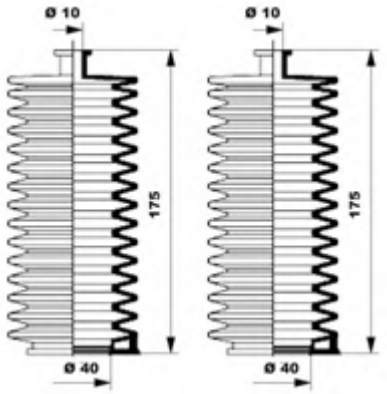

Y9C8898

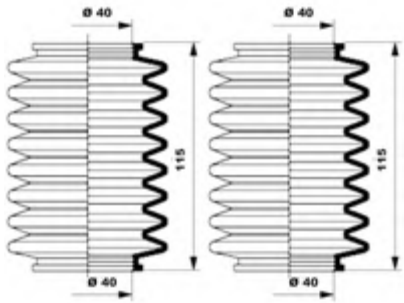

Y9C889C

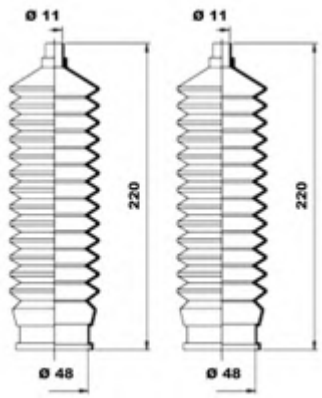

Y9C888D

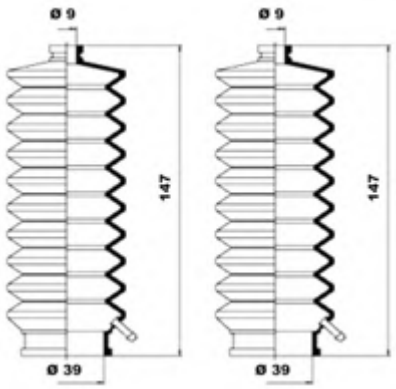

Y9C889>

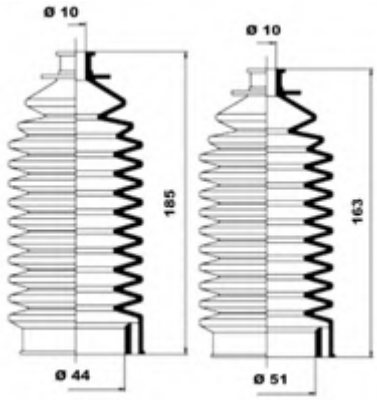

Y9C889E

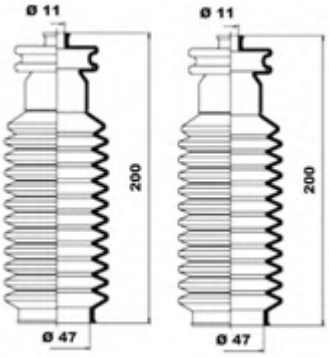

Y9C888F

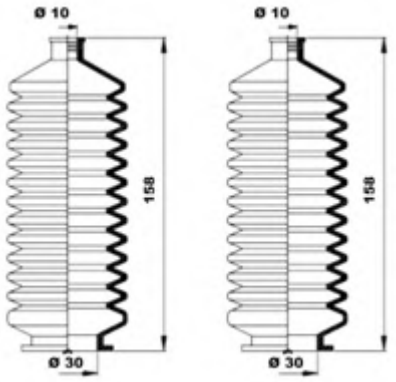

Y9C889A

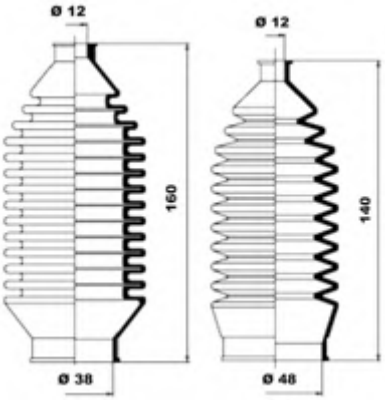

Y9C88>9

Y9C88>A

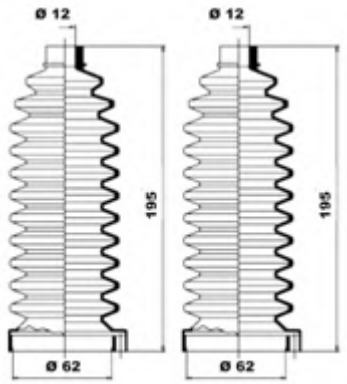

Y9C88A8

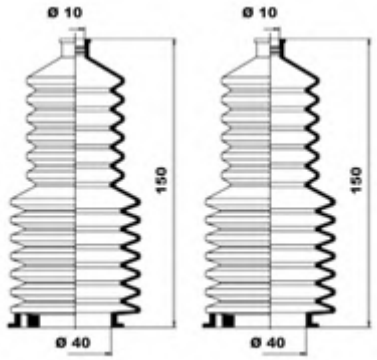

Y9C88AG

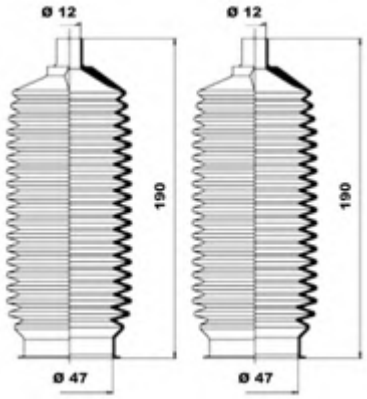

Y9C88>B

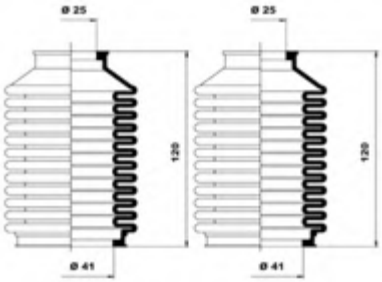

Y9C88A9

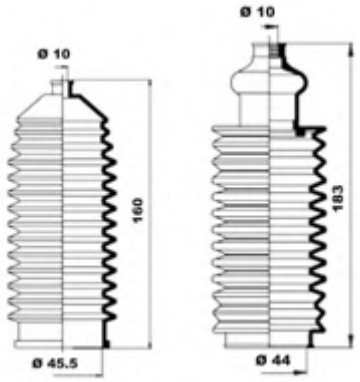

Y9C88B8

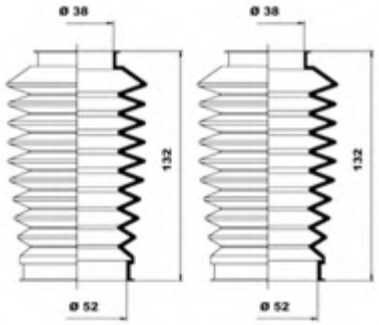

Y9C88>F

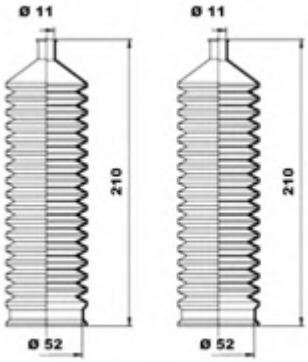

Y9C88AA

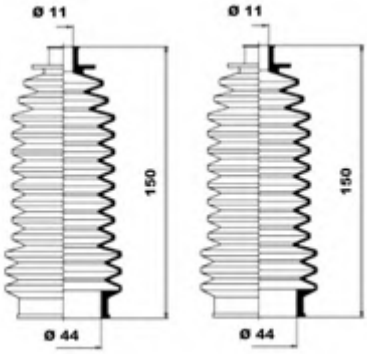

Y9C88B>

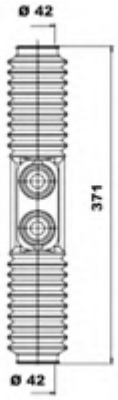

Y9C88>G

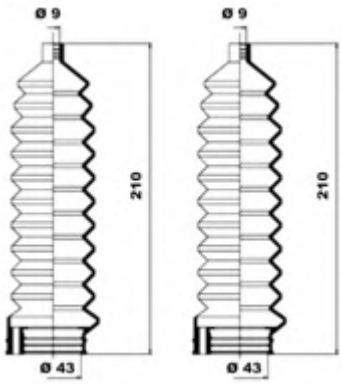

Y9C88AD

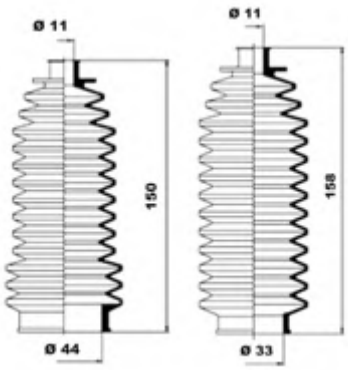

Y9C88BA

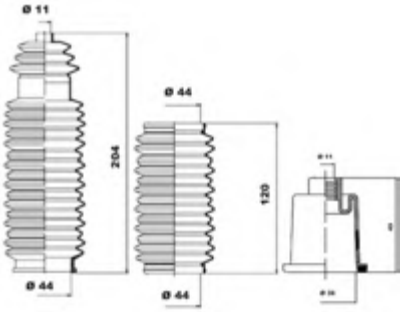

MOOG

Y9C88BB

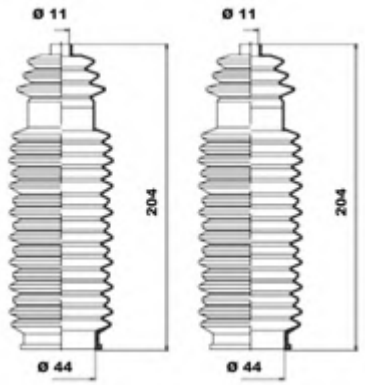

Y9C88C8

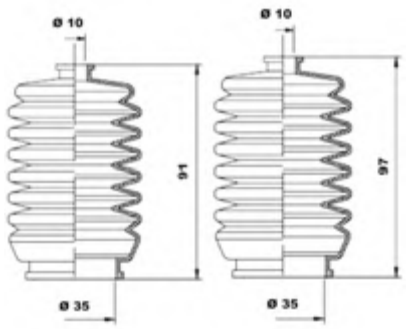

Y9C88CD

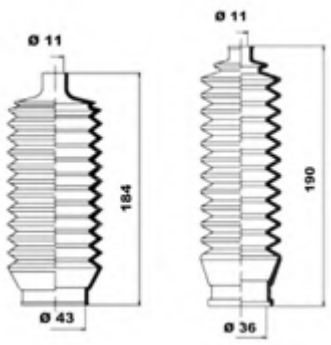

Y9C88BC

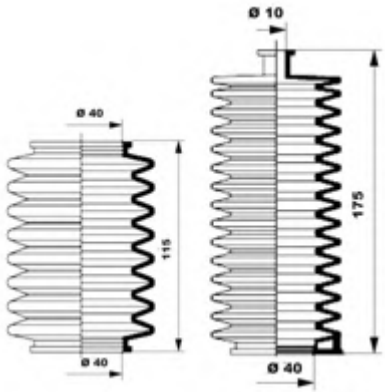

Y9C88C>

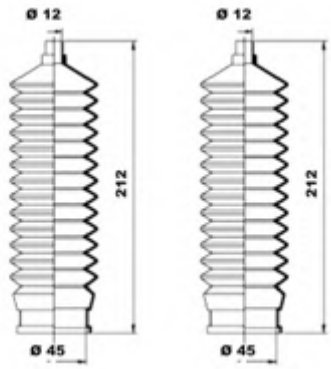

Y9C88CE

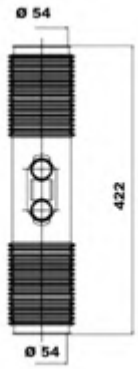

Y9C88BD

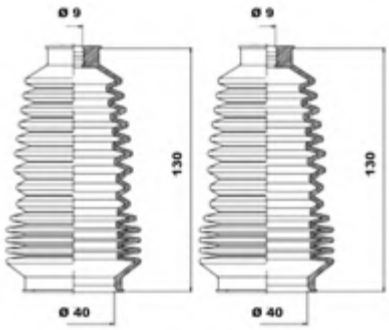

Y9C88CA

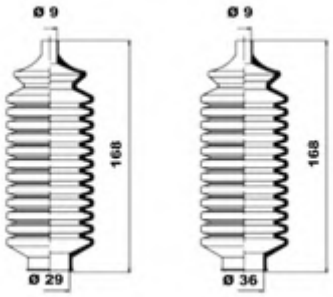

Y9C88CG

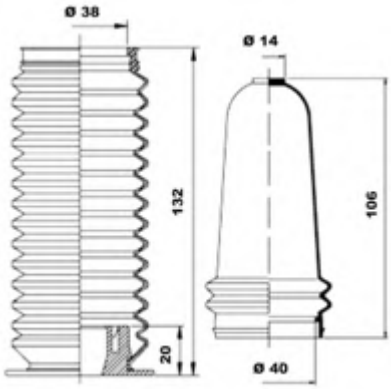

Y9C88BG

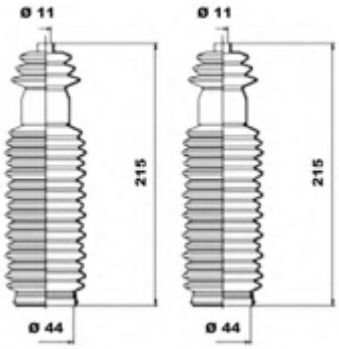

Y9C88CC

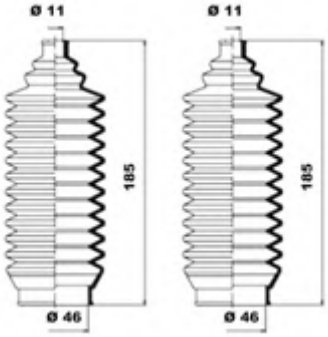

Y9C88D9

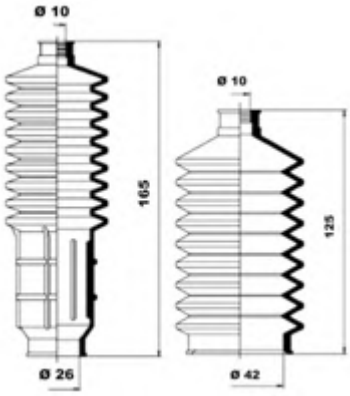

Y9C88DA

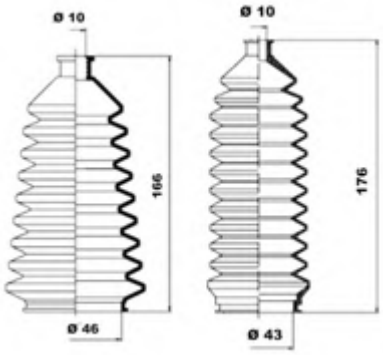

Y9C88E8

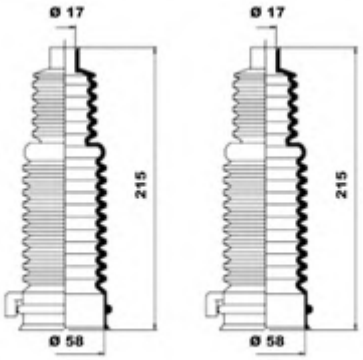

Y9C88EG

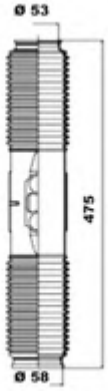

Y9C88DB

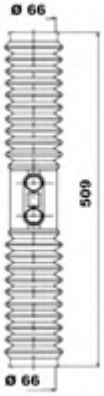

Y9C88E>

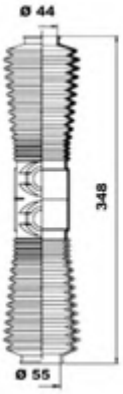

Y9C88F8

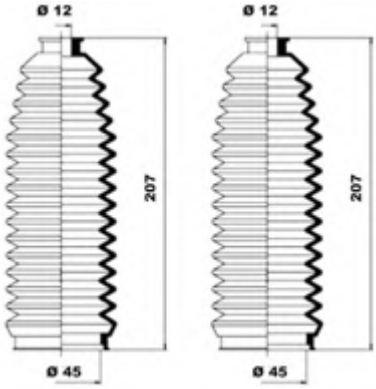

Y9C88DE

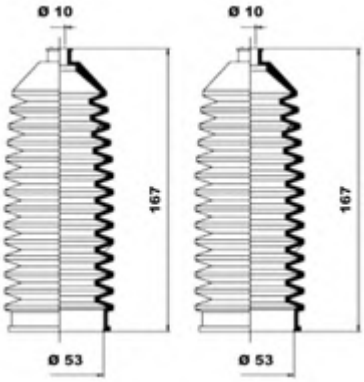

Y9C88EB

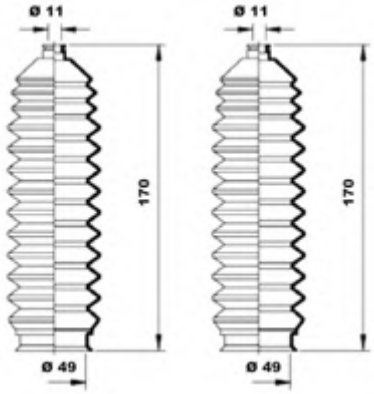

Y9C88F9

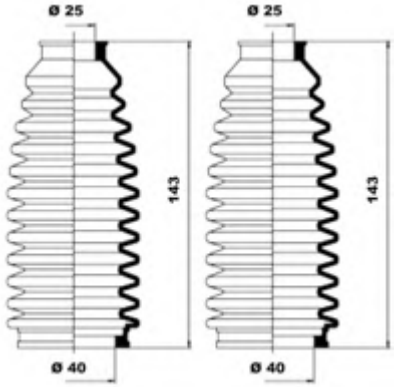

Y9C88DF

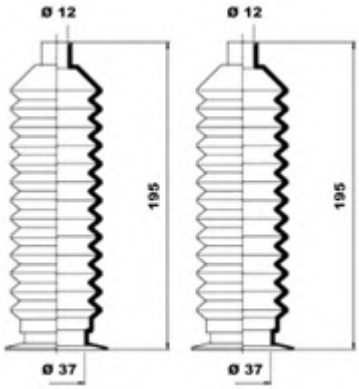

Y9C88EE

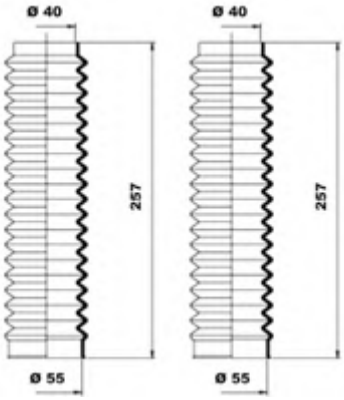

Y9C88F>

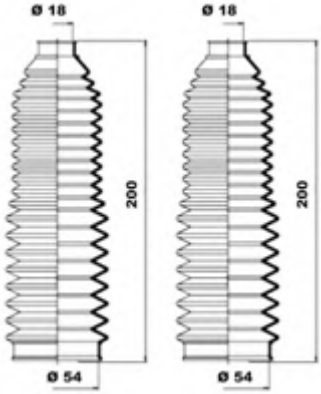

MOOG

Y9C88FA

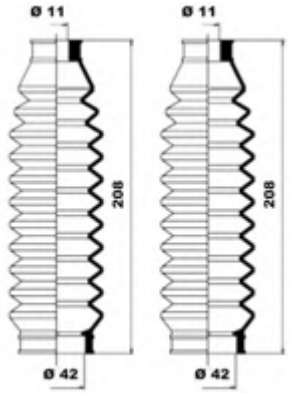

Y9C88FE

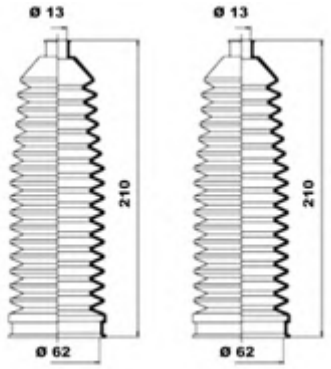

Y9C88G>

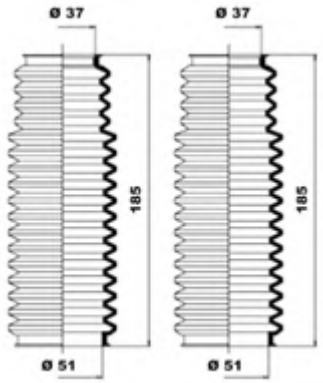

Y9C88FB

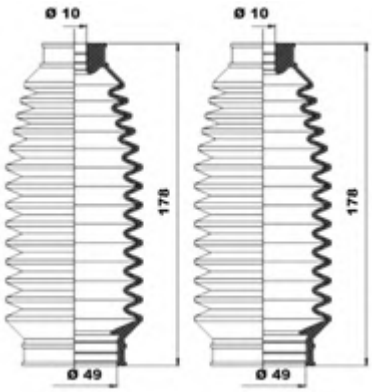

Y9C88FF

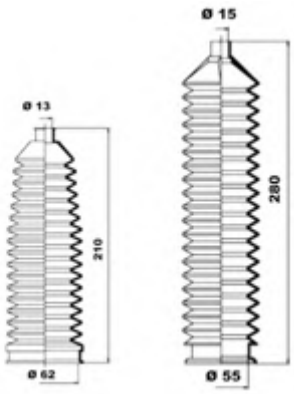

Y9C88GB

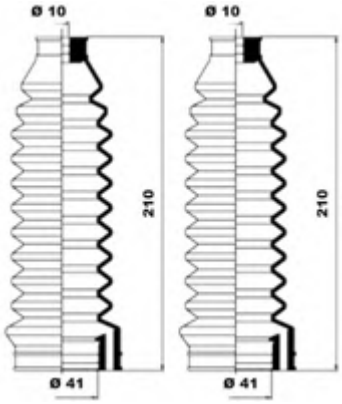

Y9C88FC

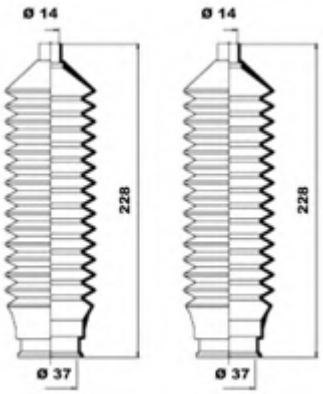

Y9C88FG

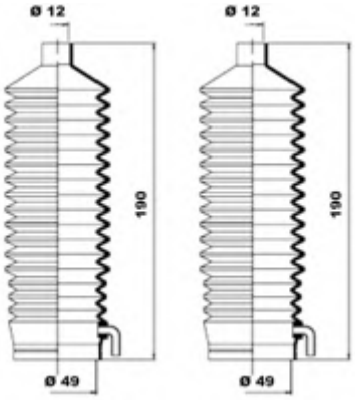

Y9C88GF

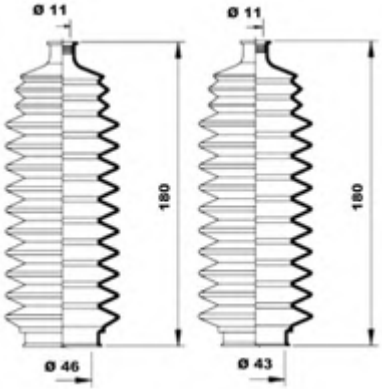

Y9C88FD

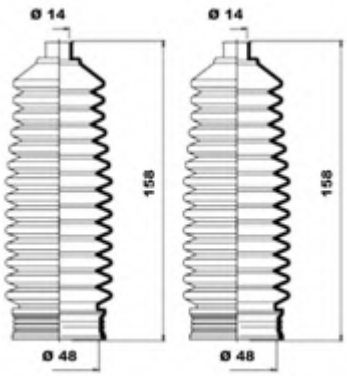

Y9C88G9

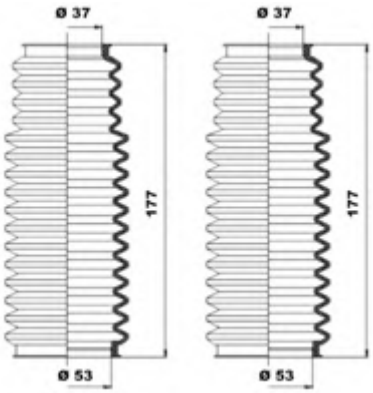

Y9C8988

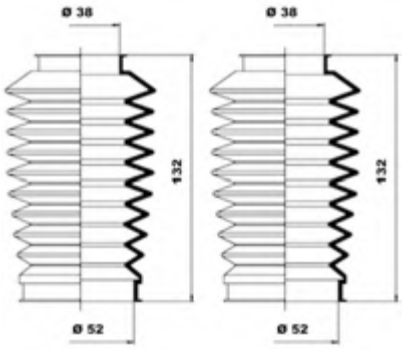

Y9C898A

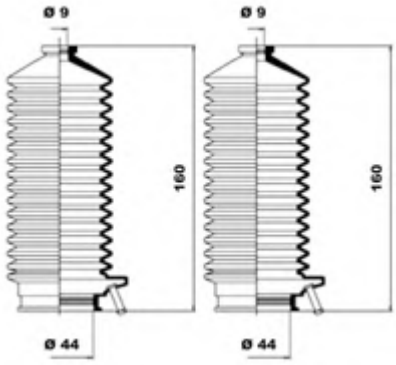

Y9C8998

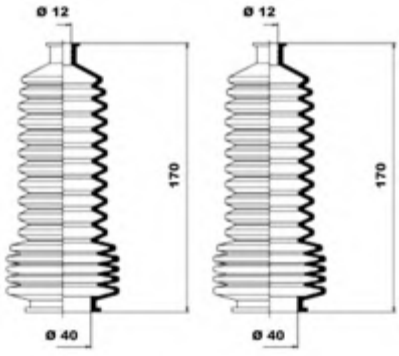

Y9C899F

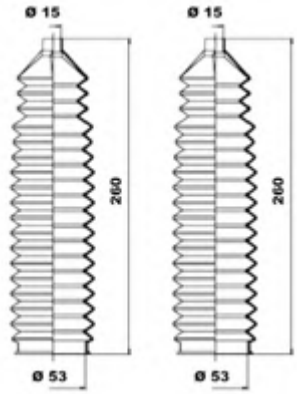

Y9C898B

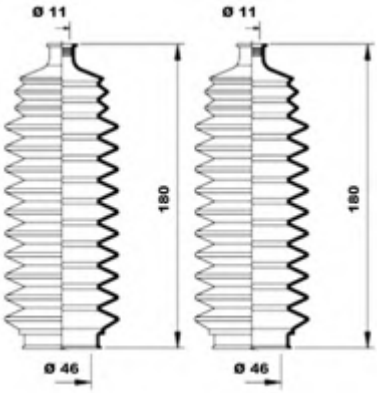

Y9C8999

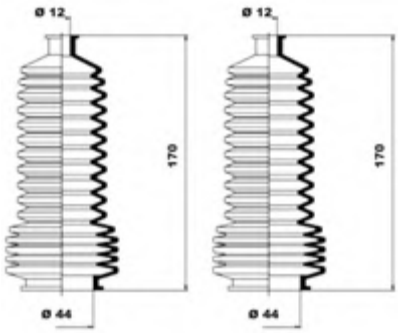

Y9C899G

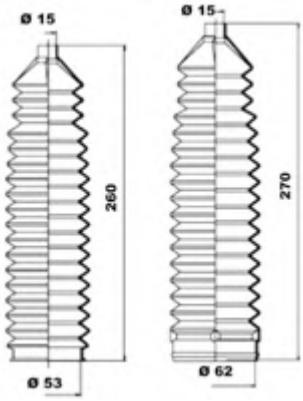

Y9C898D

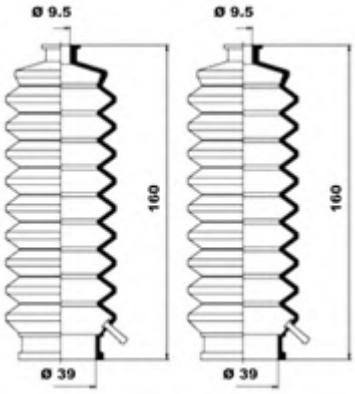

Y9C899B

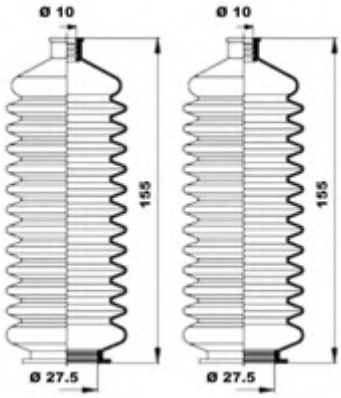

Y9C89>8

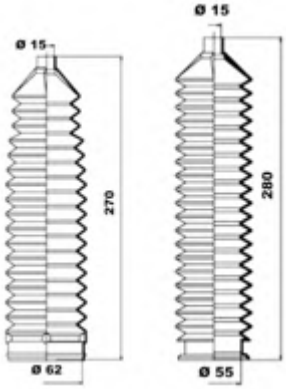

Y9C898G

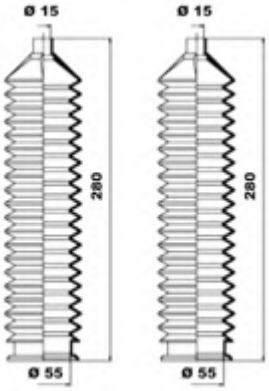

Y9C899C

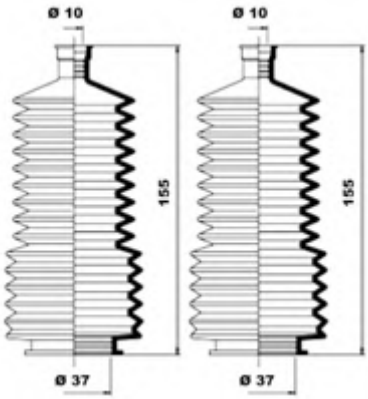

Y9C89>9

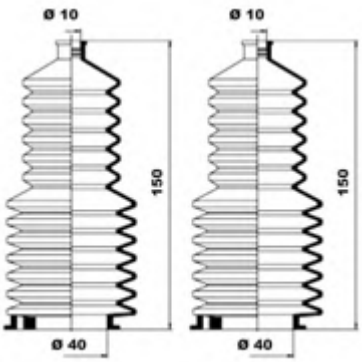

MOOG

Y9C89>>

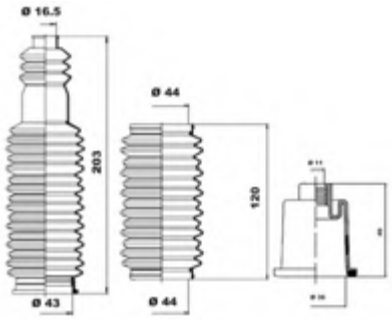

Y9C89>D

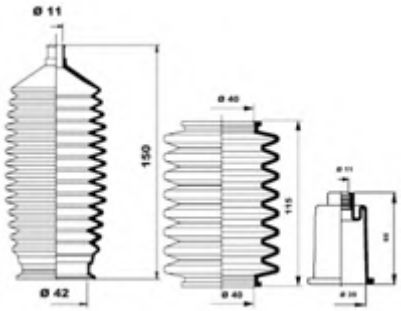

Y9C89A8

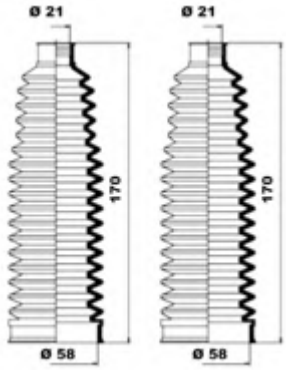

Y9C89>A

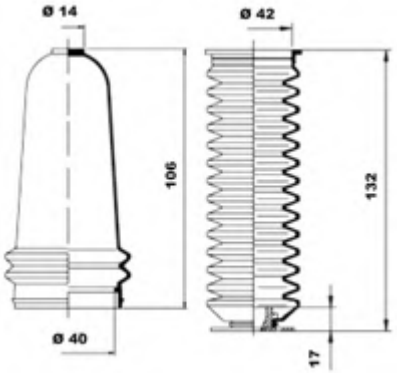

Y9C89>E

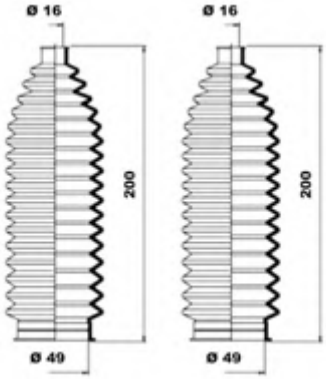

Y9C89A>

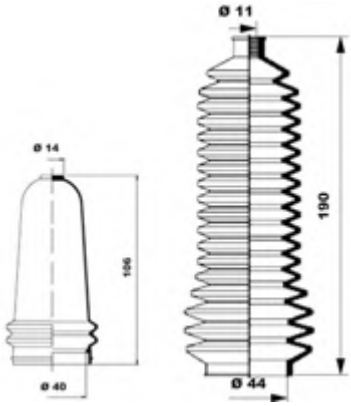

Y9C89>B

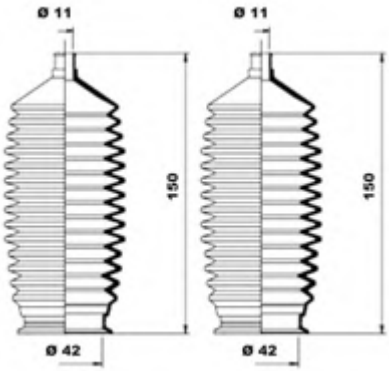

Y9C89>F

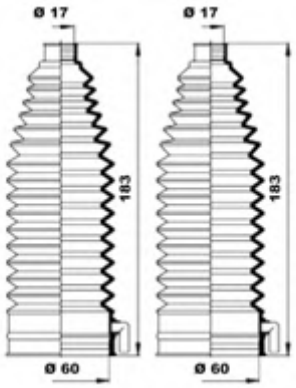

Y9C89AA

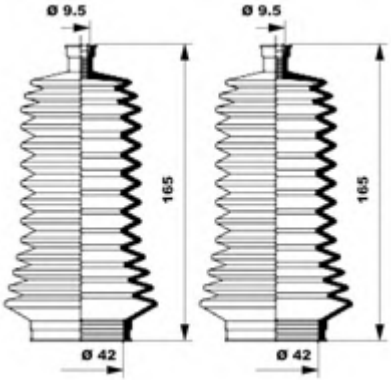

Y9C89>C

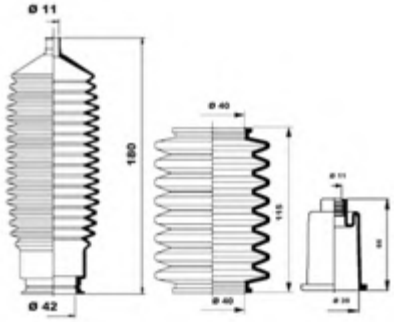

Y9C89>G

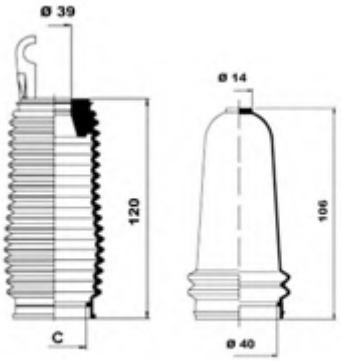

Y9C89AB

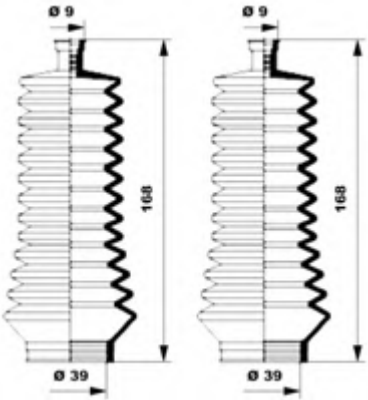

Y9C89AE

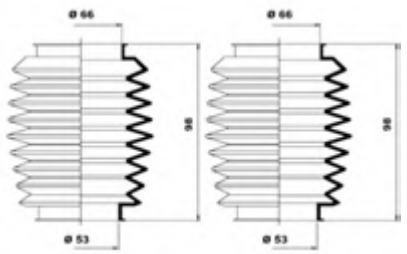

Y9C89B9

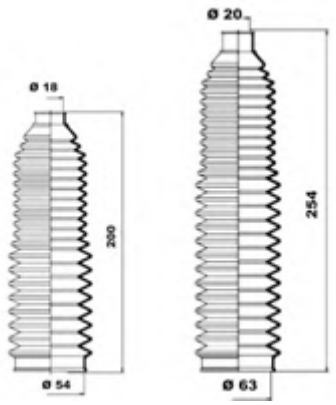

Y9C89BC

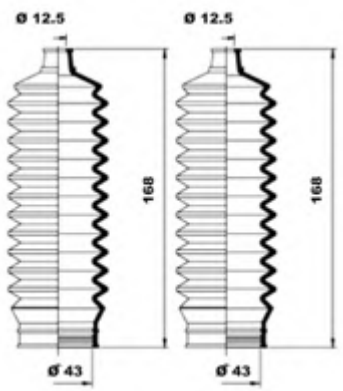

Y9C89AF

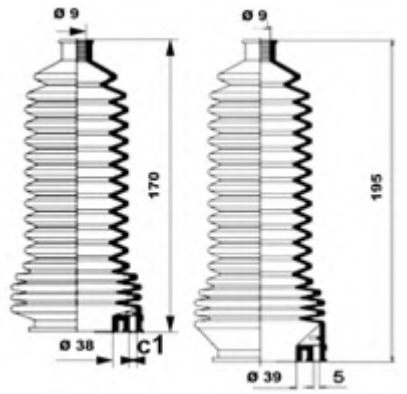

Y9C89B>

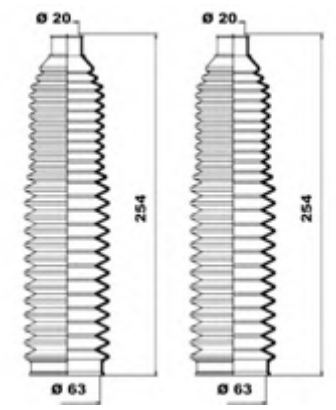

Y9C89BD

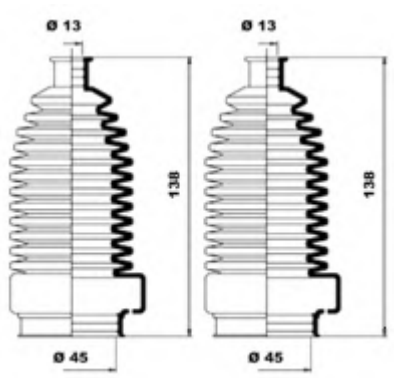

Y9C89AG

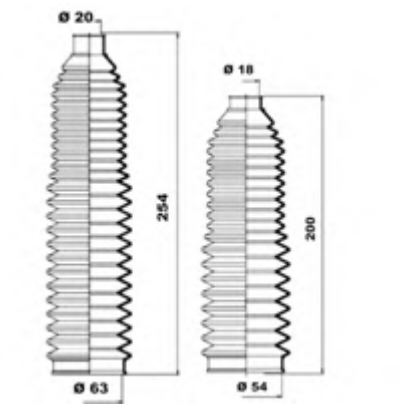

Y9C89BA

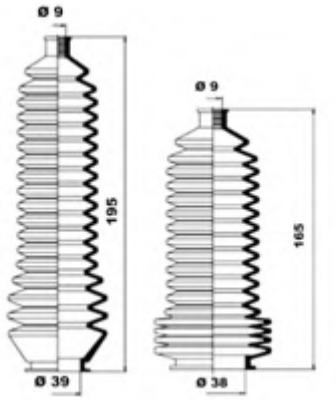

Y9C89BF

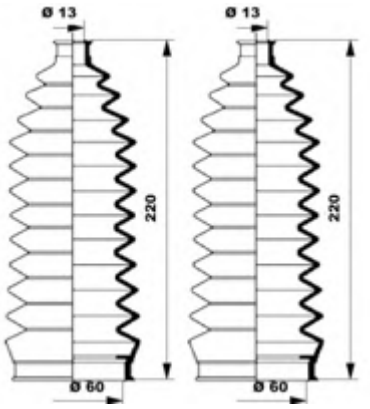

Y9C89B8

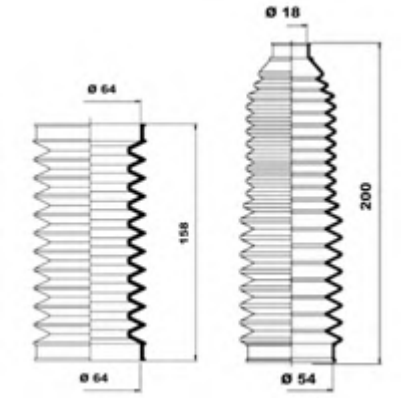

Y9C89BB

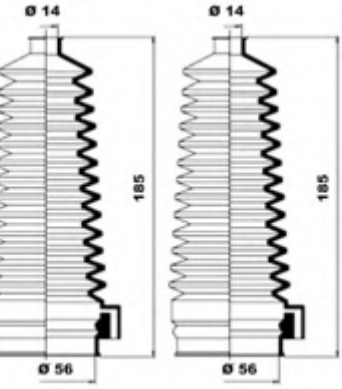

Y9C89BG

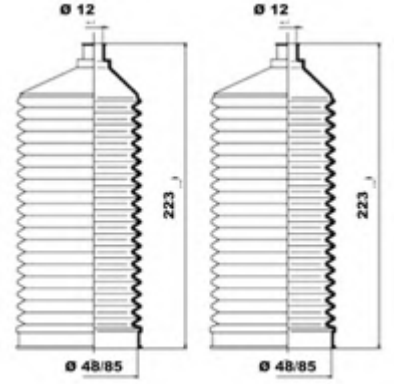

MOOG

Y9C89C8

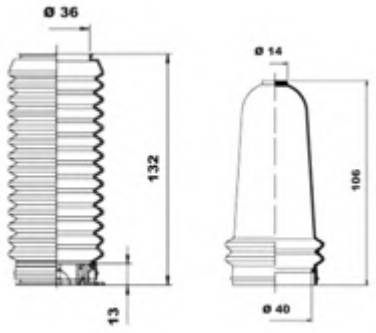

Y9C89CB

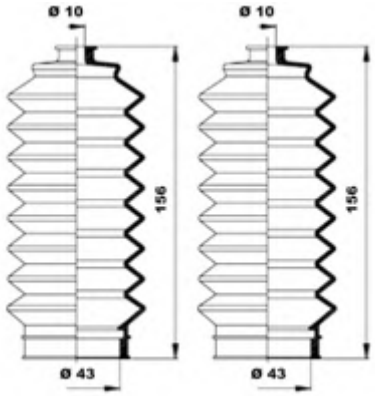

Y9C89CF

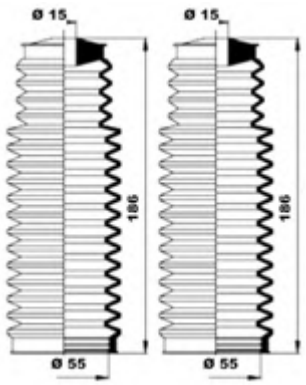

Y9C89C9

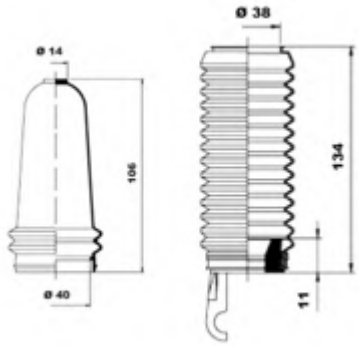

Y9C89CC

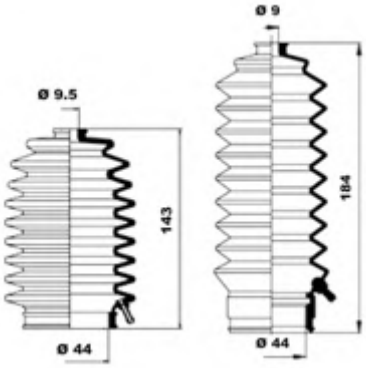

Y9C89D8

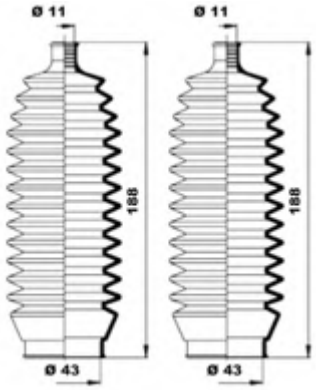

Y9C89C>

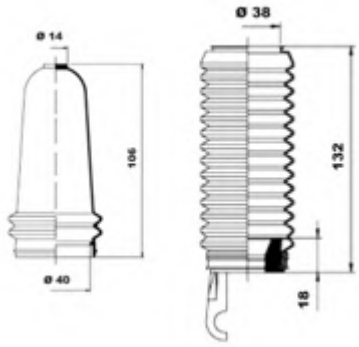

Y9C89CD

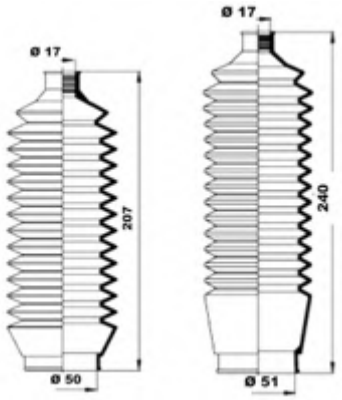

Y9C89D>

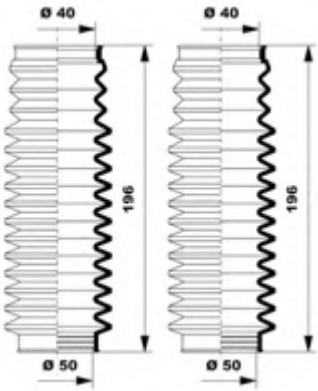

Y9C89CA

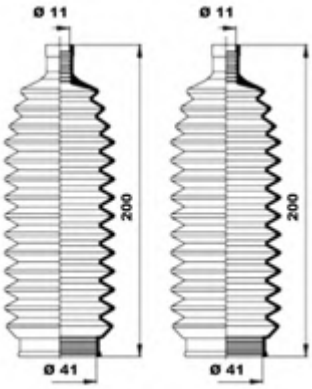

Y9C89CE

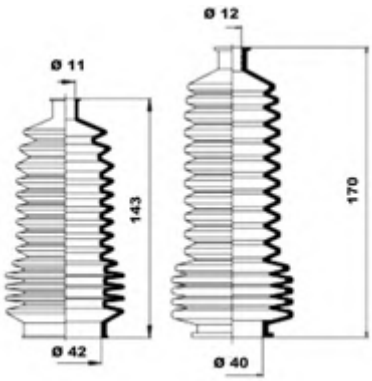

Y9C89DA

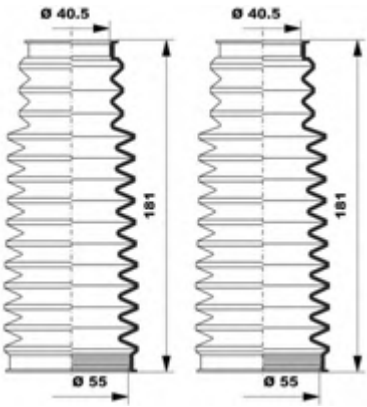

Y9C89DB

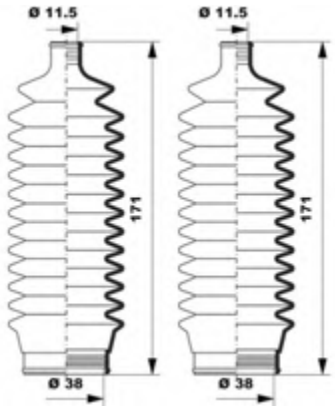

Y9C89E9

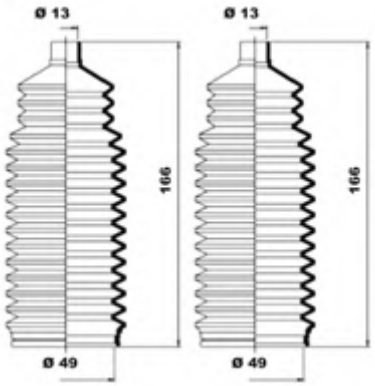

Y9C89EC

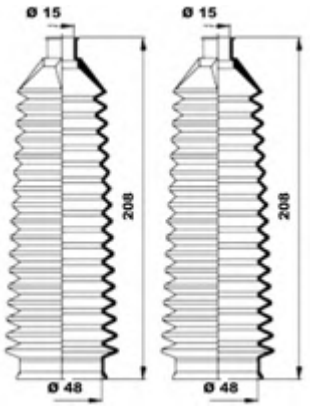

Y9C89DC

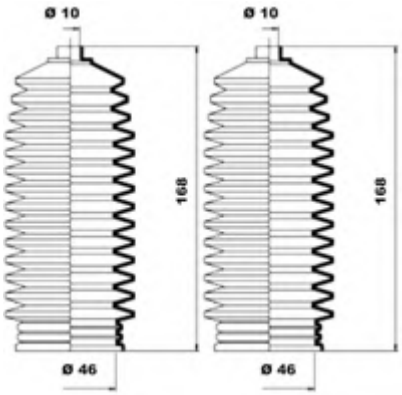

Y9C89E>

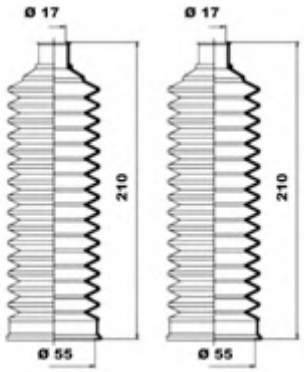

Y9C89EE

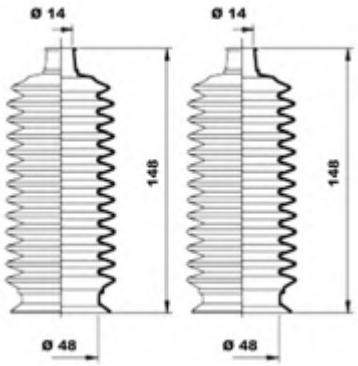

Y9C89DD

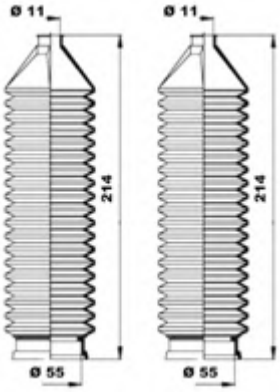

Y9C89EA

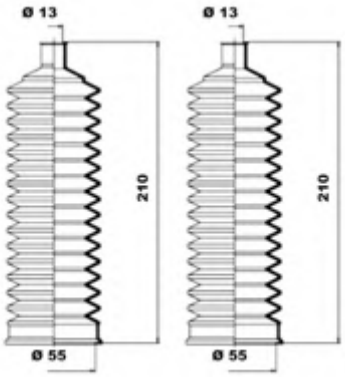

Y9C89EF

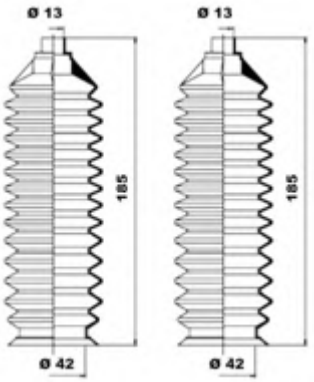

Y9C89DE

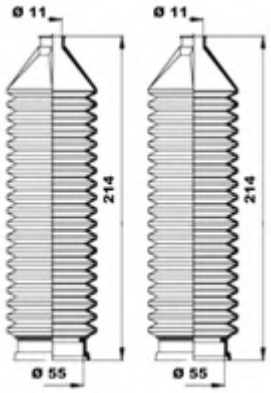

Y9C89EB

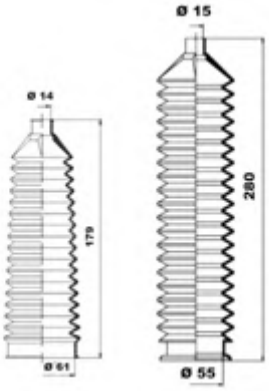

Y9C89EG

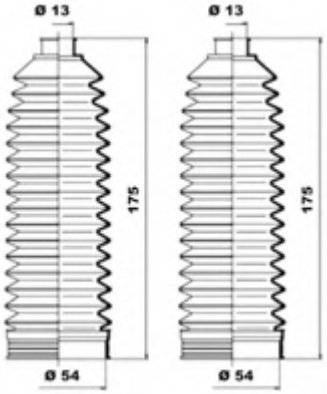

MOOG

Y9C89F8

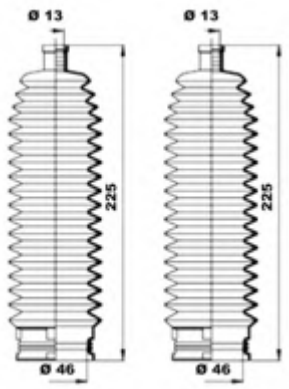

Y9C89FC

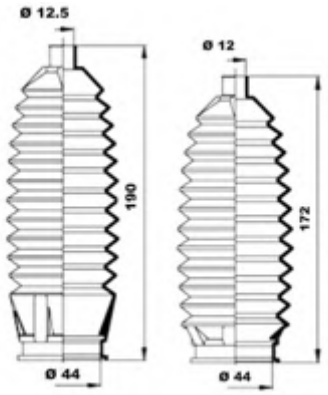

Y9C89FG

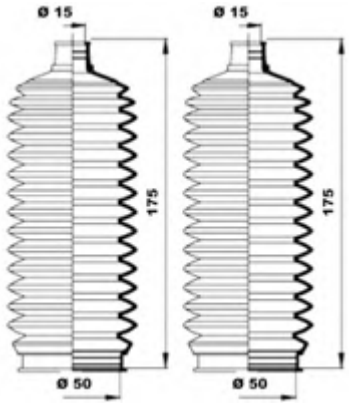

Y9C89F9

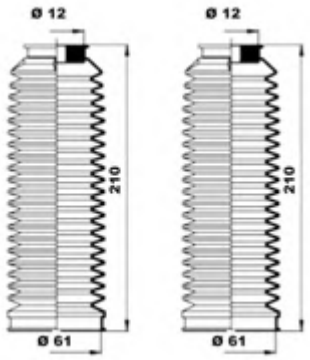

Y9C89FD

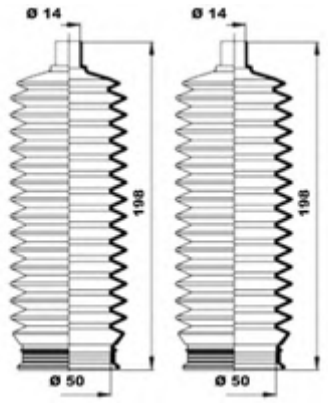

Y9C89G9

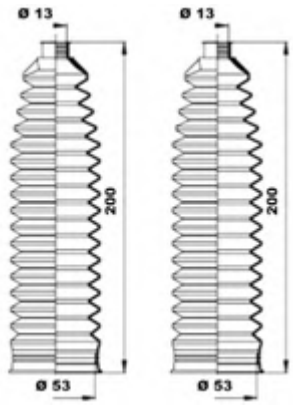

Y9C89F>

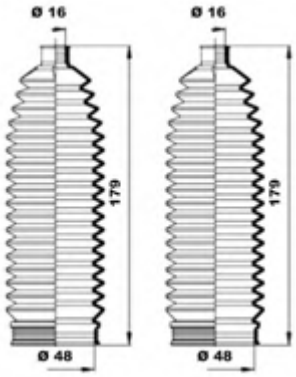

Y9C89FE

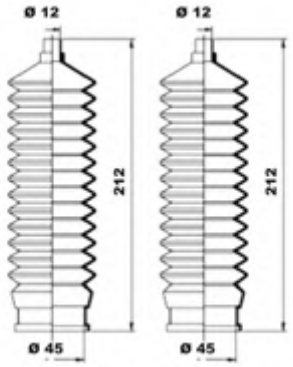

Y9C89GA

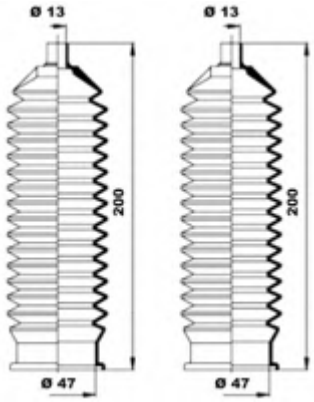

Y9C89FA

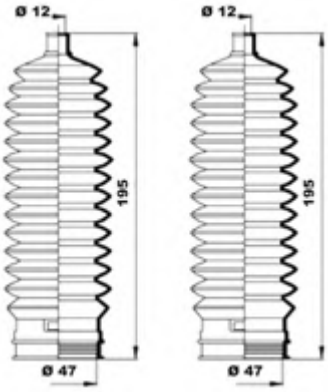

Y9C89FF

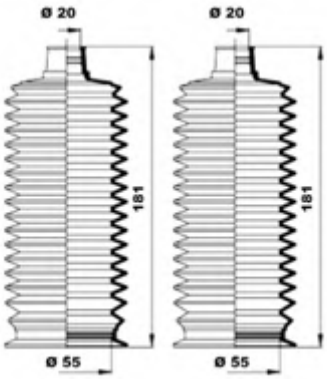

Y9C89GB

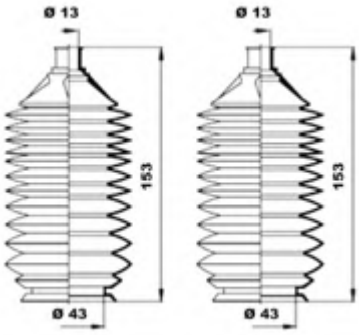

Y9C89GD

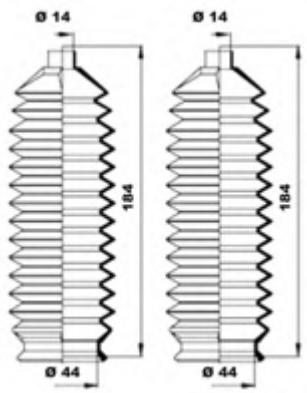

Y9C8>8B

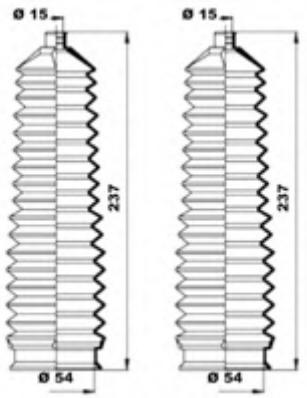

Y9C8>98

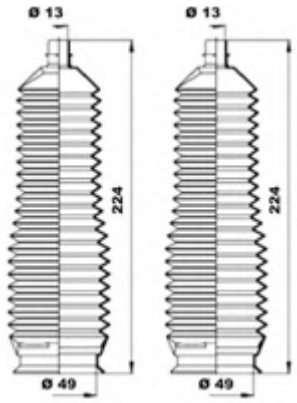

Y9C89GE

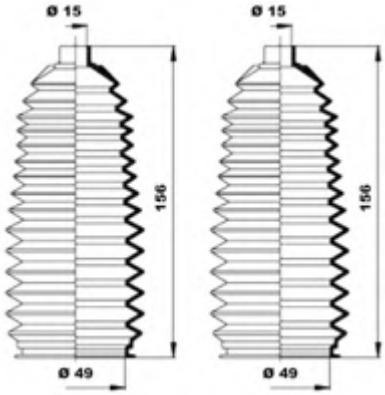

Y9C8>8C

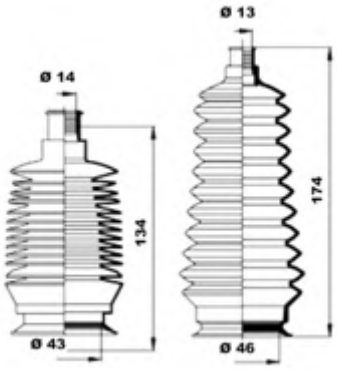

Y9C8>99

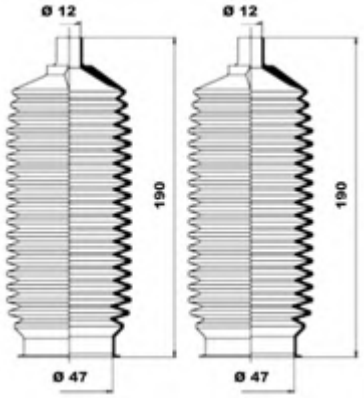

Y9C89GG

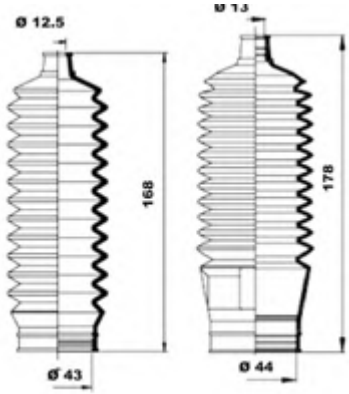

Y9C8>8F

Y9C8>9>

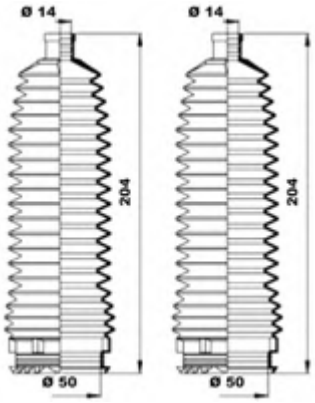

Y9C8>89

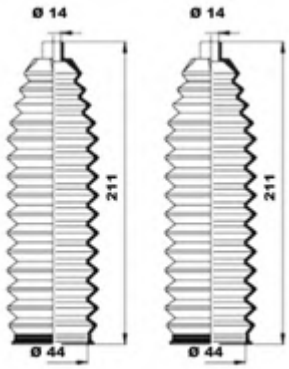

Y9C8>8G

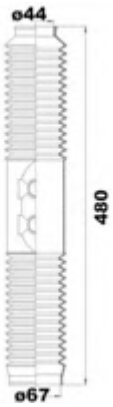

Y9C8>9A

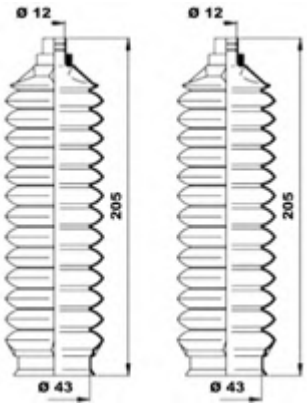

MOOG

Y9C8>9B

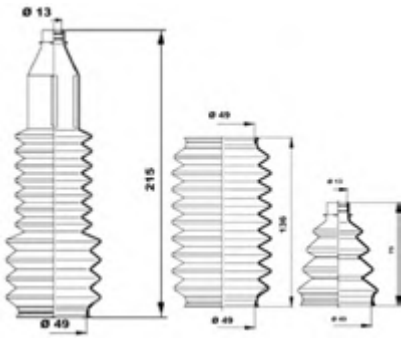

Y9C8>9F

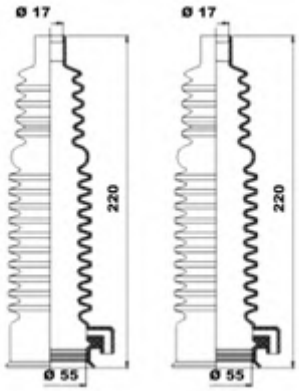

Y9C8>>>

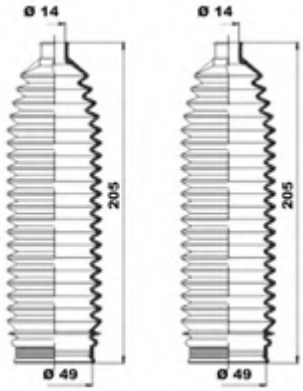

Y9C8>9C

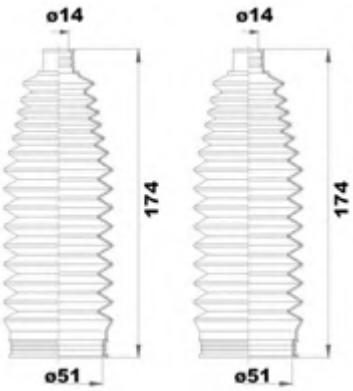

Y9C8>9G

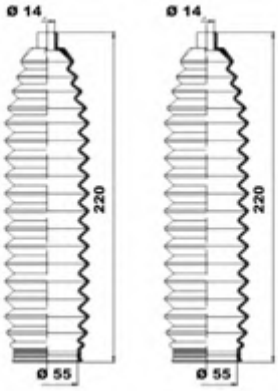

Y9C8>>A

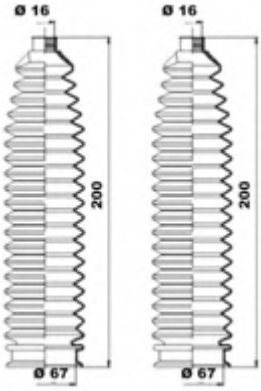

Y9C8>9D

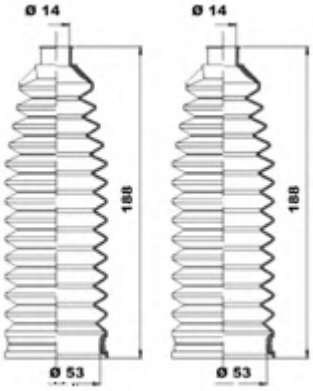

Y9C8>>8

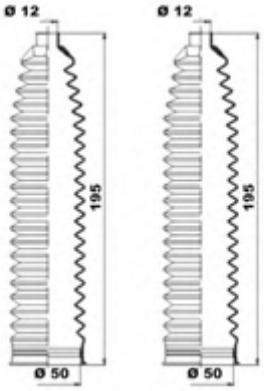

Y9C8>>B

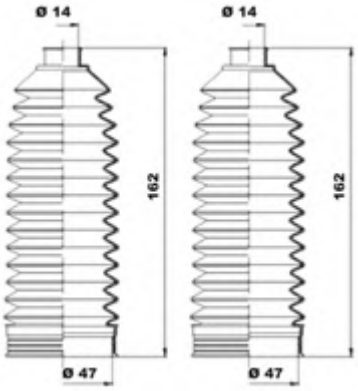

Y9C8>9E

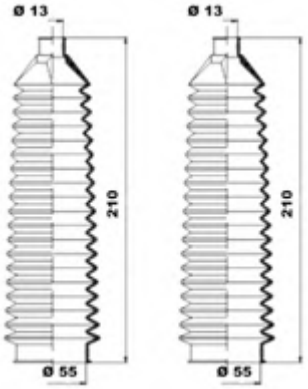

Y9C8>>9

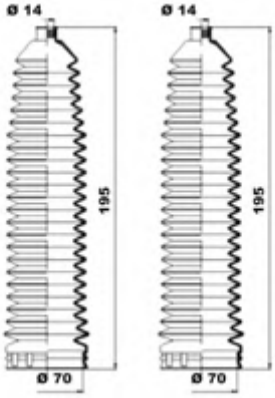

Y9C8>>C

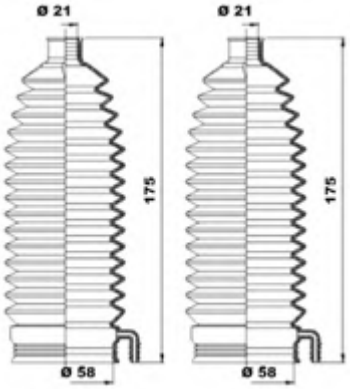

Y9C8>>D

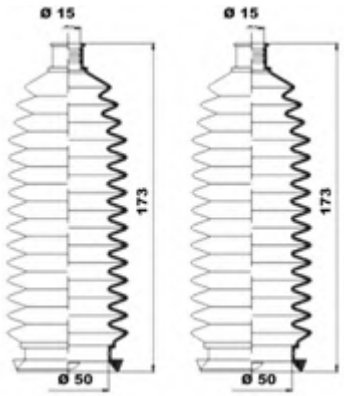

Y9C8>A9

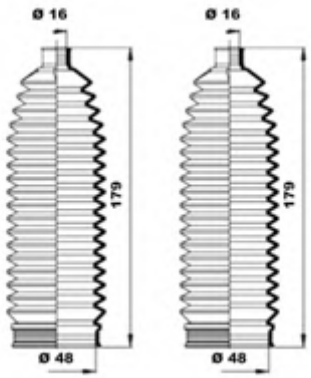

Y9C8>AC

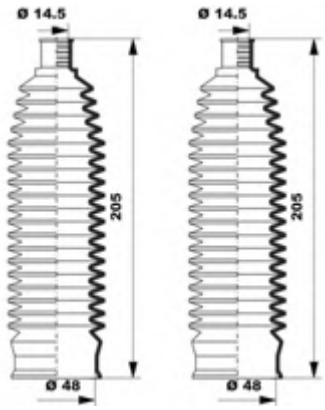

Y9C8>>E

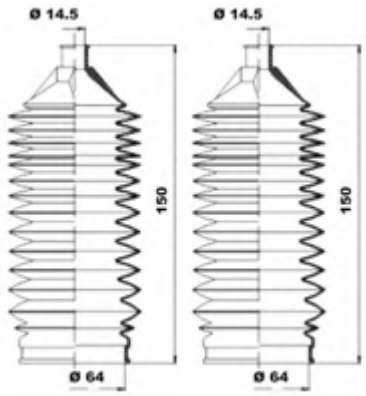

Y9C8>A>

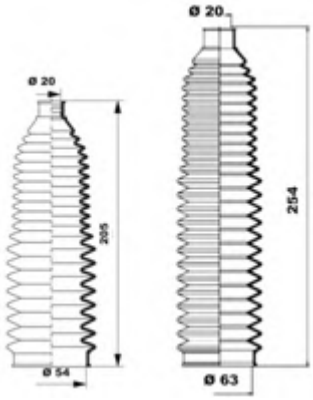

Y9C8>AD

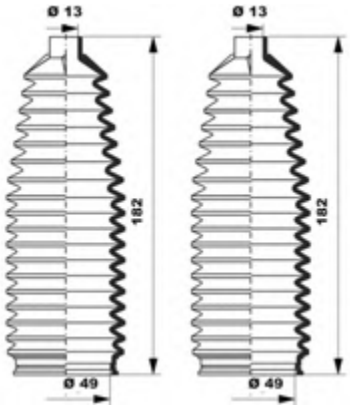

Y9C8>>F

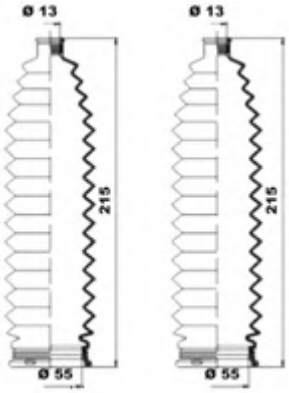

Y9C8>AA

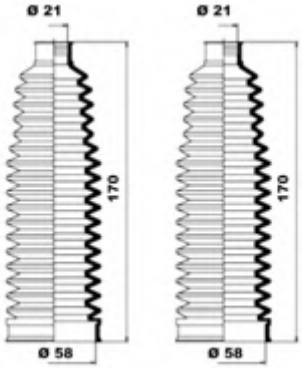

Y9C8>AE

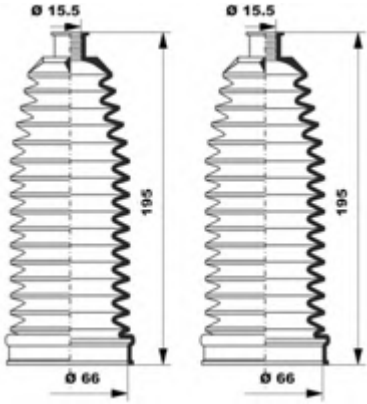

Y9C8>>G

Y9C8>AB

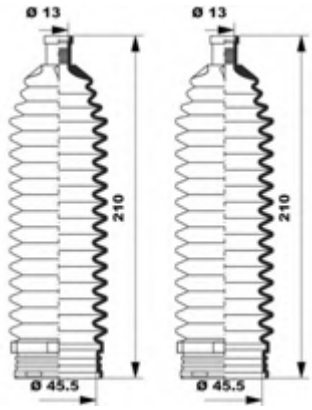

Y9C8>AG

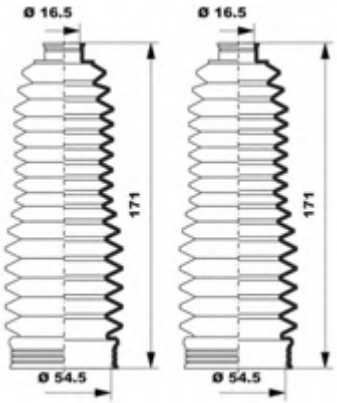

MOOG

Y9C8>B8

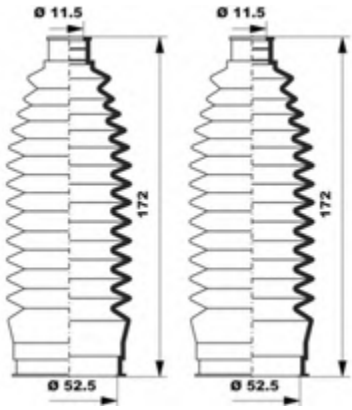

Y9C8>BB

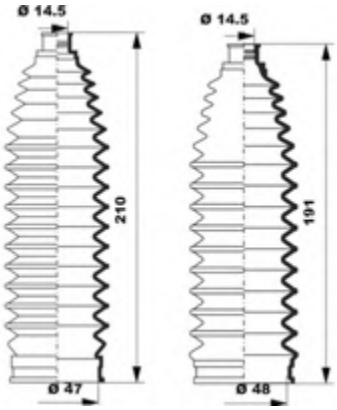

Y9C8>BF

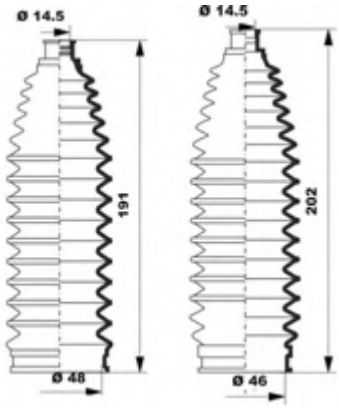

Y9C8>B9

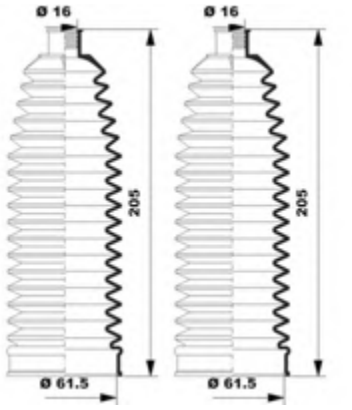

Y9C8>BC

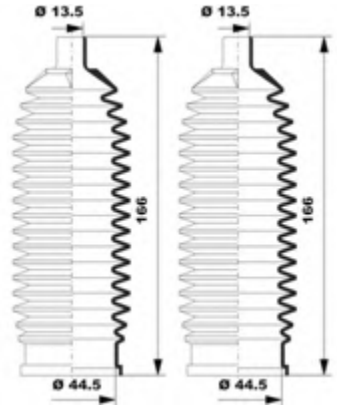

Y9C8>BG

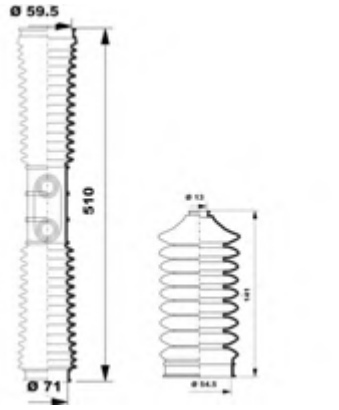

Y9C8>B>

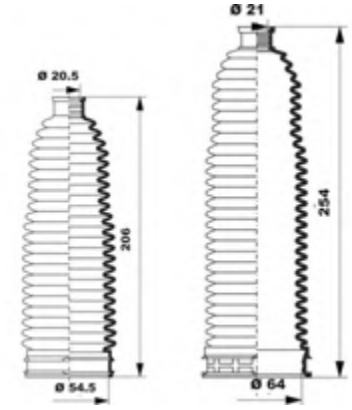

Y9C8>BD

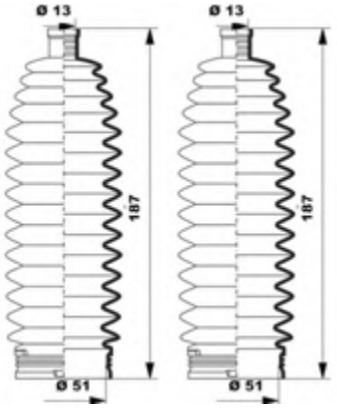

Y9C8>C8

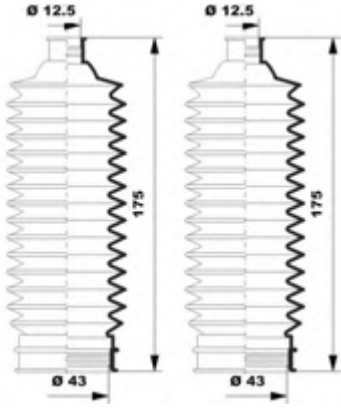

Y9C8>BA

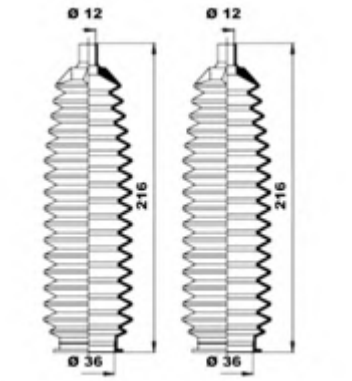

Y9C8>BE

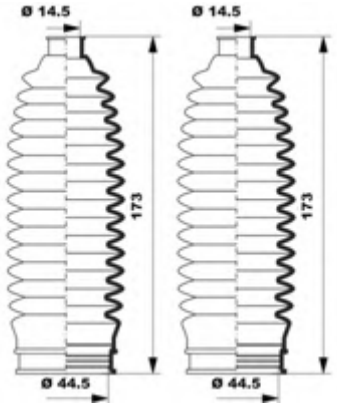

Y9C8>C9

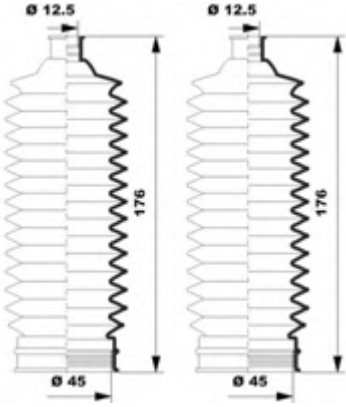

Y9C8>C>

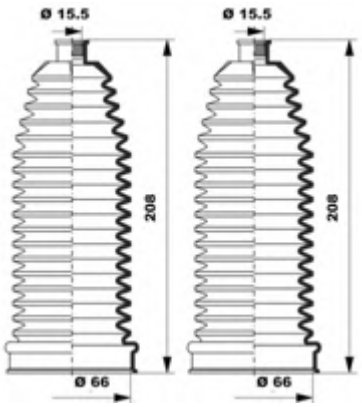

Y9C8>CD

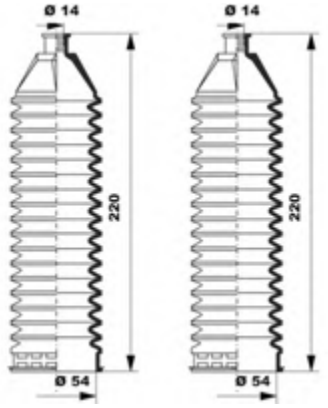

Y9C8>DC

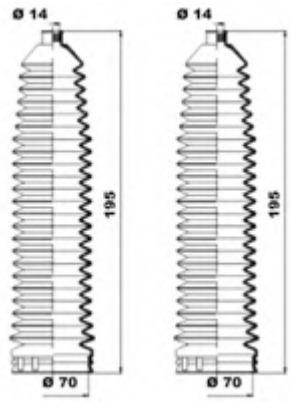

Y9C8>CA

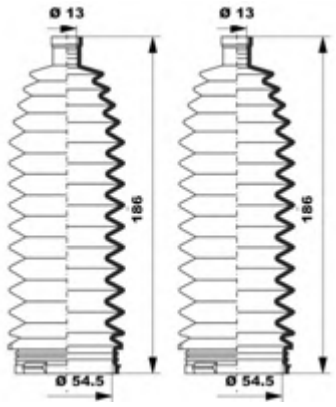

Y9C8>D8

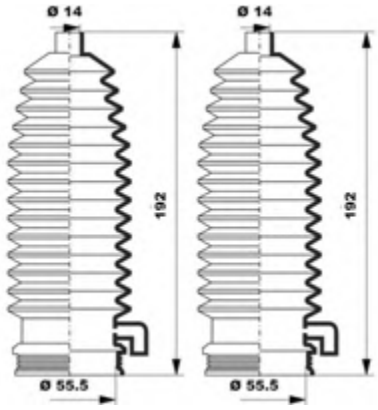

Y9C8>DD

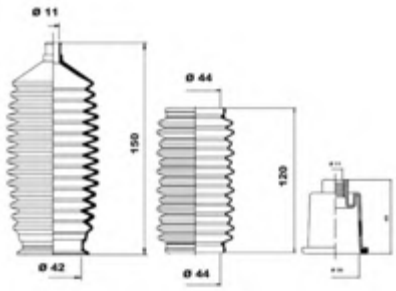

Y9C8>CB

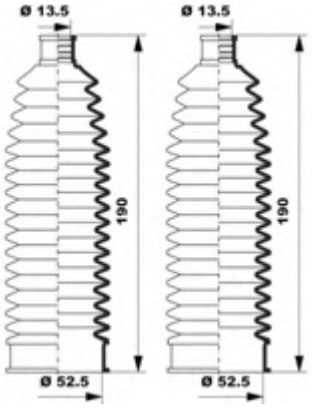

Y9C8>D>

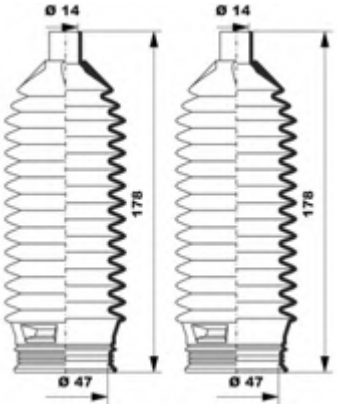

Y9C8>DG

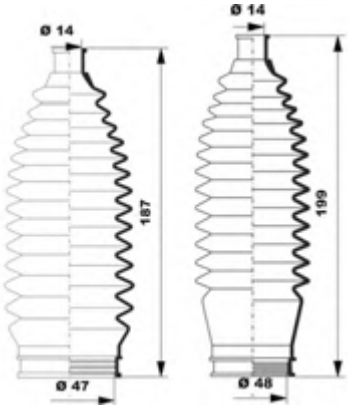

Y9C8>CC

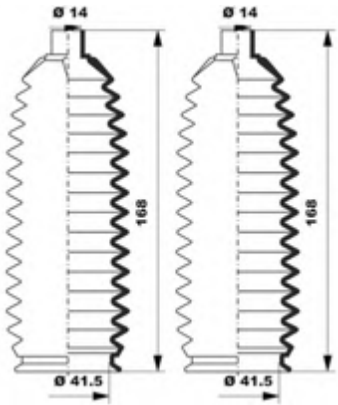

Y9C8>DB

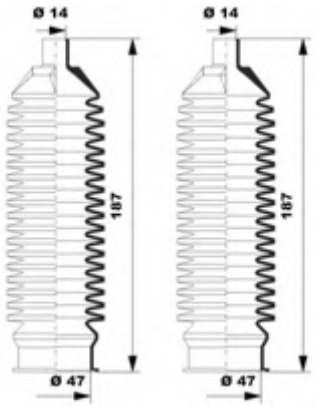

MOOG

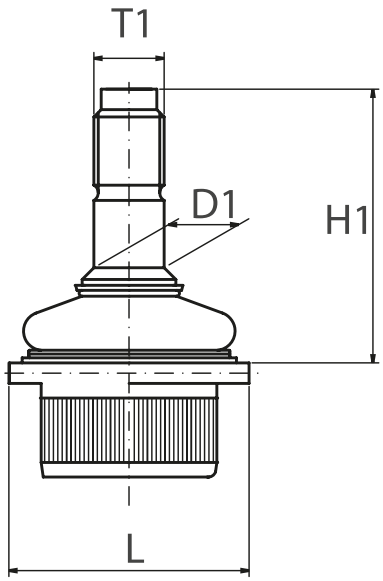

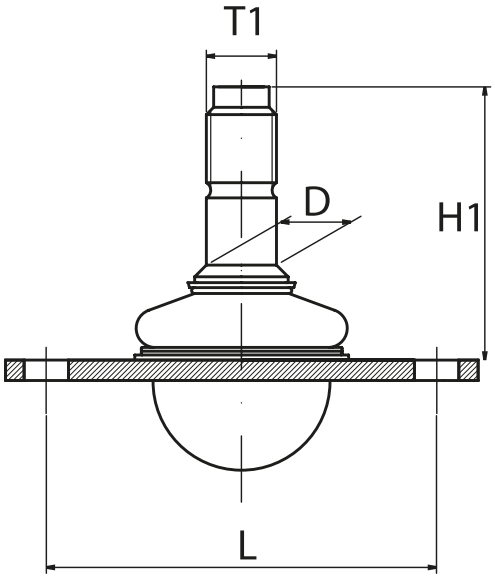

MOOG	Z9	R9	e9	V9
AL-BJ-10774	86.5	19	-	65
AU-BJ-13260	42	19.5	M14X1.5	73.2
AU-BJ-13655	59	25.6	M14X1.5	82
AU-BJ-5194	66.5	21.2	M12X1.5	65
AU-BJ-5195	66.5	21.2	M12X1.5	65
AU-BJ-7440	42	21.8	M12X1.5	82.5
BM-BJ-0899	70	20.3	M14X1.5	64.7
BM-BJ-10455	52	20	M16	60
BM-BJ-10485	44.8	23.9	M14X1.5	71.7
BM-BJ-13445	70	20.9	M14X1.5	69
BM-BJ-13837	74	23.6	M14X1.5	83
BM-BJ-1880	138	21.2	M14X1.5	69
BM-BJ-1881	148	21.2	M12X1.5	-
BM-BJ-1882	68	17.2	M12X1.5	69
BM-BJ-3861	70	18	M14X1.5	63.5
BM-BJ-4345	41.3	13.6	M14X1.5	126.5
BM-BJ-4346	49.5	16.5	M12X1.5	71.2
BM-BJ-5604	-	19.9	M12X1.5	60.5
BM-BJ-5605	-	19.9	M12X1.5	60.5
BM-BJ-8777	52	-	-	67.3
BM-BJ-8826	70	-	M14X1.5	-
CH-BJ-0315	42	18	-	45
CH-BJ-10520	60	21.4	M14X1.5	75.5
CI-BJ-0523	68	18	-	-
CI-BJ-0868	63.5	18	-	51
CI-BJ-10658	42.3	20	20	58
CI-BJ-13988	58.5	22	M14X1.5	-
CI-BJ-3355	68	16	-	46
CI-BJ-8795	63.5	18	-	-
DE-BJ-0633	103	16.3	-	70.9
DE-BJ-0636	60.5	18.3	-	70.9
DE-BJ-10655	42.05	16	-	48.8
DE-BJ-2469	100	17.3	M12X1.25	17.5
DE-BJ-2473	-	-	-	-
DE-BJ-2863	58	20	M16X1.5	-
DE-BJ-2865	124	20.25	M16X1.5	-
DE-BJ-3970	85.5	18	-	17
DE-BJ-5422	78	18	-	-
FD-BJ-0425	100.5	17.5	-	13
FD-BJ-0474	97.75	21	-	-
FD-BJ-0814	44.5	21.4	M16X1.5	77.1

MOOG	Z9	R9	e9	V9
FD-BJ-12509	42	21	-	58
FD-BJ-12510	93	21	M10X1.25	58
FD-BJ-2260	52	16.5	-	-
FD-BJ-4115	55	19	-	50
FD-BJ-4122	95	17	M10X1.5	54.5
FD-BJ-4130	96.8	24	M20X1.5	77
FD-BJ-4134	94	17.5	-	51
FD-BJ-7296	56	-	M14X1.5	-
FD-BJ-8090	41.5	17.5	-	54.6
FD-BJ-8340	42	21	-	33.3
FD-BJ-8341	42	21	-	33.3
FD-BJ-8945	90	26.1	M20X1.5	87
FI-BJ-0049	36.5	15	M12X1.25	61
FI-BJ-0512	68	20.9	M16X1.5	76.5
FI-BJ-0513	92	24.85	M18X1.5	84
FI-BJ-0936	76	13.65	M12X1.25	77
FI-BJ-13610	38.3	17	15	-
FI-BJ-4174	78	-	M12X1.25	79
FI-BJ-4958	84	23.5	M16X1.5	-
FI-BJ-5414	60	17	-	-
FI-BJ-7517	38	15	M12X1.25	77
FI-BJ-7530	108	19.5	M16X1.5	70.5
FI-BJ-7531	108	22.4	M18X1.5	105
FI-BJ-8357	65	18	-	50
HO-BJ-0167	44	16	M12X1.25	84.5
HO-BJ-10126	53	22	M14X1.5	92.2
HO-BJ-10439	60	20	M14X1.5	55.7
HO-BJ-10440	60	20	M14X1.5	55.7
HO-BJ-10556	-	-	-	-
HO-BJ-10683	-	-	-	-
HO-BJ-10953	44	12.7	M10X1.25	63
HO-BJ-14808	60	18	M12X1.25	-
HO-BJ-3290	40.6	14	M10X1.25	63
HO-BJ-4919	37.5	18	M12X1.25	74.5
HO-BJ-6619	40.1	18	M12X1.25	69.5
HO-BJ-8094	60	20	M14X1.5	45
HY-BJ-10599	-	-	-	-
HY-BJ-10813	95	18	-	60.5
HY-BJ-1190	50	17.6	M12X1.25	20.5
HY-BJ-1214	105.3	-	-	-
HY-BJ-1607	98	22	M16X1.5	-

MOOG	Z9	R9	e9	V9
HY-BJ-1614	425	18	M14X1.5	-
HY-BJ-1658	84.5	22	M16X1.5	99.5
HY-BJ-2596	98	22	M16X1.5	23
HY-BJ-2629	50	20	M12X1.25	65.2
HY-BJ-2642	50	22	-	65.2
HY-BJ-2662	90	20.6	M14X1.5	77
HY-BJ-3977	80	14.5	M12X1.25	44
HY-BJ-4747	90	15.1	M14X1.5	78.5
HY-BJ-4749	76	15.15	M12X1.25	73
JA-BJ-0561	50.6	19.3	M12X1.5	91.75
KI-BJ-12659	45.9	18	18	60.2
KI-BJ-13409	-	16.8	M12X1.25	59
KI-BJ-4721	101	20	M16X1.5	44
KI-BJ-4757	45.7	16	-	65
KI-BJ-7094	78	-	M12X1.5	-
KI-BJ-8938	-	-	-	-
KI-BJ-8941	44	-	14	59
LA-BJ-0063	65	14	M12X1.25	82.1
LA-BJ-0392	64.5	17.3	M14X1.5	79.5
LN-BJ-0220	92	15	M12X1.25	23.5
LR-BJ-1928	54.5	18.3	M14X1.5	97.5
LR-BJ-4057	70	22.2	M14X1.5	78.5
LR-BJ-4838	57.5	17.3	M12X1.75	81
LR-BJ-4839	58.3	26.75	M16X2	167.3
LR-BJ-7928	57.4	17.3	M12X1.75	91
LR-BJ-7932	47.3	39	13.2	62
LR-BJ-7933	-	-	NA	-
LR-BJ-8089	56	23	M14X1.5	71
MD-BJ-0747	-	15	-	-
MD-BJ-104144	42.45	18	-	69
MD-BJ-104147	117.5	16	-	71
MD-BJ-104185	117	18	M16X1.5	53
MD-BJ-10688	61	15	M12X1.25	57
MD-BJ-1171	113	13.7	-	77
MD-BJ-13905	44	20	20	68.5
MD-BJ-13931	44	22	-	-
MD-BJ-1618	53	20.1	M16X1.5	-
MD-BJ-2291	53	12.6	M12X1.25	53
MD-BJ-2327	42.3	15	M14X1.5	48.5
MD-BJ-2703	75	18	M14X1.5	75
MD-BJ-2711	45	18	-	-
MD-BJ-3935	123	24	M20X1.5	21.5
MD-BJ-4869	41	18	-	53.5
MD-BJ-5168	116	20	M16X1.5	20.5
ME-BJ-0366	74	22	-	63
ME-BJ-0980	55.9	20.25	M14X1.5	104.5
ME-BJ-0981	55.9	19.9	M14X1.5	107
ME-BJ-10749	36.7	16.2	M12X1.25	65.35
ME-BJ-13818	-	46	M16X1.5	-
ME-BJ-1531	75.5	15.5	M14X1.5	-
ME-BJ-2075	75.5	15.5	M14X1.5	47
ME-BJ-2099	57.5	15.2	M12X1.5	68.5
ME-BJ-2725	35	19	M14X1.5	-
ME-BJ-2749	57	18.2	M14X1.5	54
ME-BJ-3697	35	19	M14X1.5	66.5
ME-BJ-4392	74	22	-	43
ME-BJ-4952	62	26	M20X1.5	-
ME-BJ-5150	42.4	14.6	M12X1.5	-
ME-BJ-5597	56	19.3	M16X1.5	74.5
ME-BJ-5598	56	18	M16X1.5	79
ME-BJ-6301	50	12	M18X1.5	80

MOOG	Z9	R9	e9	V9
ME-BJ-6313	40	20	M14X1.5	48
ME-BJ-6331	66.5	20	M14X1.5	71.5
ME-BJ-6345	62	26.7	M20X1.5	77
ME-BJ-8111	50	14.3	M10X1.5	50.8
MI-BJ-0350	46.6	22.1	M16X1.5	-
MI-BJ-10362	75	22	M16X1.5	100
MI-BJ-10371	47	17	M12X1.25	-
MI-BJ-10377	50	18	M14X1.5	-
MI-BJ-10384	84.5	22	M16X1.5	99.5
MI-BJ-104247	92	22	M16X1.5	33.5
MI-BJ-104248	92	22	M16X1.5	-
MI-BJ-104249	88.5	18	M14X1.5	29
MI-BJ-4865	52	18	M14X1.5	-
MI-BJ-4914	90	19.4	M16X1.5	-
MI-BJ-4915	90	19.4	M16X1.5	-
MI-BJ-7231	70	18	M14X1.5	58.8
MI-BJ-7232	44	21.5	M16X1.5	-
MI-BJ-7233	41	21.8	M16X1.5	66
MI-BJ-7385	40.1	20	-	-
MI-BJ-8860	39.8	18	-	-
NI-BJ-0311	45	18	M14XP1.5	87.2
NI-BJ-10389	64	18	M14X1.5	86
NI-BJ-104145	45	18	M14X1.5	72
NI-BJ-10418	67.5	18.5	M14X1.5	-
NI-BJ-10423	67	22	M18X1.5	105
NI-BJ-10627	43	18	-	-
NI-BJ-10804	-	22.2	M18X1.5	79
NI-BJ-10930	83	22.1	M18X1.5	83
NI-BJ-12582	-	-	M12X1.25	70
NI-BJ-13545	39.3	12.7	Ø16	32.5
NI-BJ-2309	41	-	M14X1.5	-
NI-BJ-2783	38.2	18.5	M14X1.5	74.5
NI-BJ-2792	45	12.9	-	-
NI-BJ-4841	41.1	15.2	M14X1.5	-
NI-BJ-4926	60.3	22	M12X1.5	79.5
NI-BJ-4927	55	18	M12X1.5	89.5
NI-BJ-4954	41.07	20	M12X1.5	45.5
NI-BJ-5199	63.5	18.85	M14X1.5	27
NI-BJ-5200	63.5	14.9	M14X1.5	27
OP-BJ-0177	127.5	15	-	-
OP-BJ-0312	127	15	-	47
OP-BJ-0812	43	16	M18X1.5	-
OP-BJ-12502	60	23.1	M16X1.5	78
OP-BJ-1504	80	22.5	M18X1.5	-
OP-BJ-1895	54	16	-	-
OP-BJ-1899	54	16	-	-
OP-BJ-2040	40.5	20	M14X1.5	74.5
OP-BJ-4745	59	18.5	M12X1.25	-
OP-BJ-4870	56	16	-	52
OP-BJ-5375	86.5	16	M12X1.25	62.5
OP-BJ-5393	95.5	15	-	55
OP-BJ-5567	60	16	M12X1.25	69
OP-BJ-5583	45	12	-	52.5
PE-BJ-0409	83	18	M18X1.5	45
PE-BJ-0837	90	17.5	M14X1.5	51.5
PE-BJ-14684	-	21	M14X1.5	64
PE-BJ-15315	63.5	18	18	55
PE-BJ-3322	72.5	17.5	M14X1.5	-
PE-BJ-3323	54.1	21	M14X1.5	90
PE-BJ-3347	52	17.5	M14X1.5	64.5
PE-BJ-3356	36.8	16	-	54.5

MOOG	Z9	R9	e9	V9
PE-BJ-3847	62	15.4	M12X1.25	80
PE-BJ-4249	52	16	M12X1.25	58
PE-BJ-4501	53.5	10	M10X1.25	-
PE-BJ-6909	63	16	-	46.5
RE-BJ-0471	46	19.4	M12X1.25	24
RE-BJ-0531	57	17.5	M12X1.25	62.24
RE-BJ-0532	46	17.5	M12X1.25	62.24
RE-BJ-0811	94	16	-	50
RE-BJ-1040	49	12	-	75
RE-BJ-10478	56	21.8	M12X1.25	56.6
RE-BJ-10718	73	16	16	44
RE-BJ-12595	56	22.5	M12X1.25	70.1
RE-BJ-13609	38.3	-	18	41
RE-BJ-15237	46	19	18	52.5
RE-BJ-2094	38.3	16	-	-
RE-BJ-2098	45.4	19	M14X1.5	-
RE-BJ-2302	52	20	M16X1.5	-
RE-BJ-2832	46	18	-	45.6
RE-BJ-4264	94	16	-	44
RE-BJ-4271	98.5	13	M16X1.5	75
RE-BJ-7025	45	17.65	M12X1.25	71.5
RE-BJ-7212	56	22.24	M12X1.25	66.5
RE-BJ-7431	56	20	-	-
RE-BJ-7432	56	20	-	-
RE-BJ-7762	56	-	M16X1.5	-
RE-BJ-7905	43.3	24	62.8	-
RE-BJ-7906	101	18.4	-	57.7
RE-BJ-8100	-	18	-	56.75
RE-BJ-8336	56	21.8	M12X1.25	47.3
RO-BJ-0361	76.5	27	M10X1.5	61
RO-BJ-0773	54	19.2	M14X1.5	101
RO-BJ-0779	61	23.4	M16X1.5	101.5
RO-BJ-104170	284	-	-	-
RO-BJ-1496	-	23	M20X1.5	-
RO-BJ-2022	44	19.32	M14X1.5	66.5
RO-BJ-3545	105	13.9	-	71.5
RO-BJ-3546	87	14	-	89
RO-BJ-3552	87	14	-	79
RO-BJ-3562	43.5	15.5	M12X1.25	68.5
RO-BJ-6596	-	17	-	-
RO-BJ-6597	-	17	-	-
SA-BJ-10928	65	20	-	-
SK-BJ-0413	66	18.17	M12X1.5	76.4
SK-BJ-0414	66	18.17	M12X1.5	76.4
SK-BJ-8223	37.5	17	-	46.5
SU-BJ-104141	67	17	M12X1.25	-
SU-BJ-104197	37	15.85	M10X1.25	53.7
SZ-BJ-0608	50	18	M14X1.5	-
SZ-BJ-5080	40.5	16.5	-	-
TO-BJ-0352	84.6	18	M14X1.5	-
TO-BJ-0538	55.7	18	M14X1.5	62.5
TO-BJ-10032	54	20	M16X1.5	65.5
TO-BJ-104111	79.3	18	M14X1.5	-
TO-BJ-10648	71.3	21	M14X1.5	98
TO-BJ-1635	59	16.4	M12X1.5	75
TO-BJ-1734	104.1	21.1	M14X1.5	89.2
TO-BJ-2274	37	16.5	M12X1.25	-
TO-BJ-3001	89	21	M14X1.5	46.5
TO-BJ-3002	89	21	M14X1.5	46.5
TO-BJ-3009	129	20	M16X1.5	22.5
TO-BJ-3010	129	20	M16X1.5	22.5

MOOG	Z9	R9	e9	V9
TO-BJ-3011	50	17.9	M14X1.5	82.5
TO-BJ-4108	80.5	21	M14X1.5	72.1
TO-BJ-4227	82	16.6	M12X1.25	65
TO-BJ-4237	82	16.6	M12X1.25	65
TO-BJ-4974	67.9	18.1	M14X1.5	24.7
TO-BJ-4991	59.5	15.8	M14X1.5	83.5
TO-BJ-4992	51.4	-	M18X1.5	-
TO-BJ-6579	60	21	M14X1.5	73
TO-BJ-6588	47	21	M14X1.5	89.8
TO-BJ-8833	43.8	18	M14X1.5	86.1
TO-BJ-8834	43.8	18	M14X1.5	86.1
TO-BJ-8972	56	-	M14X1.5	57.2
VO-BJ-0319	66	18.4	M14X1.5	50
VO-BJ-13581	66.7	20	M12X1.5	64
VO-BJ-13582	66.7	20	M12X1.5	64
VO-BJ-13732	45.1	19	M12X1.5	77
VO-BJ-13733	45.1	19	M12X1.5	77
VO-BJ-1859	82.2	19	M12X1.5	-
VO-BJ-1860	82.2	19	M12X1.5	-
VO-BJ-1990	-	15	-	-
VO-BJ-2410	48	15.5	M12X1.5	52.5
VO-BJ-5011	91.5	21.3	M12X1.5	18
VO-BJ-5012	91.5	21.3	M12X1.5	18
VO-BJ-7050	77	-	M14X1.5	-
VO-BJ-7154	70	19	-	47.5
VO-BJ-7184	62.5	18	M12X1.5	52.5
VO-BJ-7926	65	18.2	M12X1.5	-
VO-BJ-7927	65	18.2	M12X1.5	-
VO-BJ-8248	47	16	M10X1	56
VO-BJ-8249	47	16	M10X1	56
VO-BJ-8287	47	18.2	M12X1.5	50.5
VO-BJ-8288	47	18.2	M12X1.5	50.5
VV-BJ-0893	97	12.7	M12X1.75	90
VV-BJ-13891	-	21	-	-
VV-BJ-13892	-	21	-	-
VV-BJ-3284	75	18	M12X1.75	-
VV-BJ-3653	87.75	18	M14X1.5	-
VV-BJ-4399	75	14	M14X2	45
VV-BJ-4873	85	21.8	M14X1.5	71.5
VV-BJ-5554	94	15	-	65.5
VV-BJ-8740	69	22	-	69.5

A

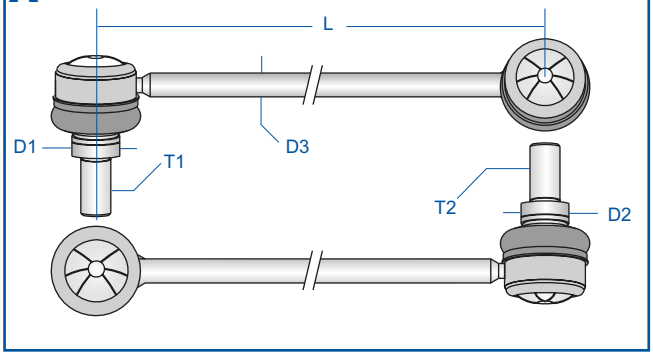
L
D1
T1
D3
T2
D2

B

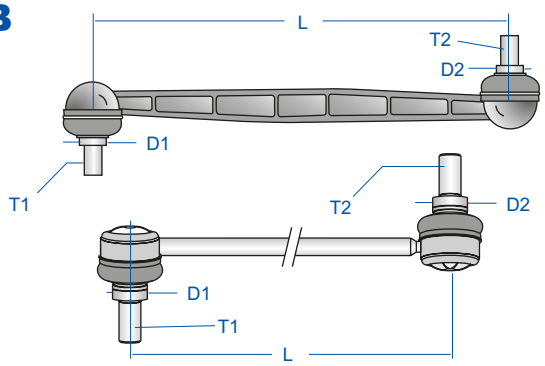
L
T2
D2
D1
T1
T2
D2
D1
T1
L

C

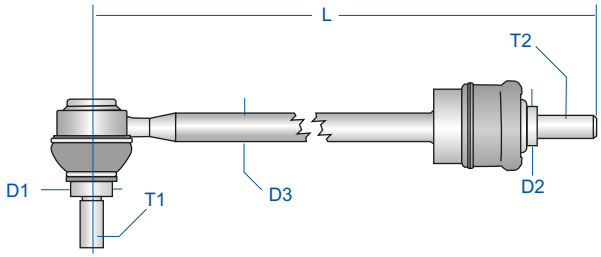
L
T2
D1
T1
D3
D2

D

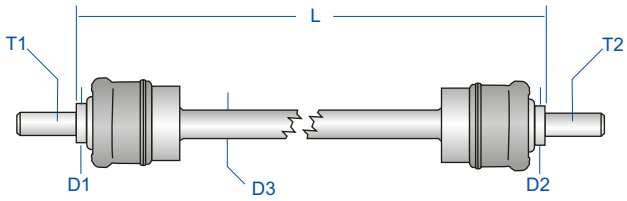
L
T1
T2
D1
D3
D2

E

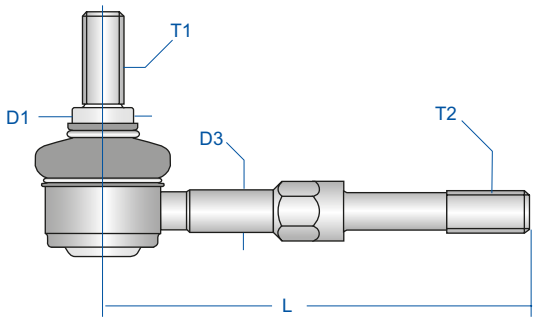
T1
D1
D3
T2
L

F

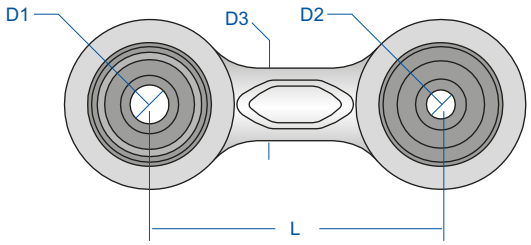
D1
D3
D2
L

G

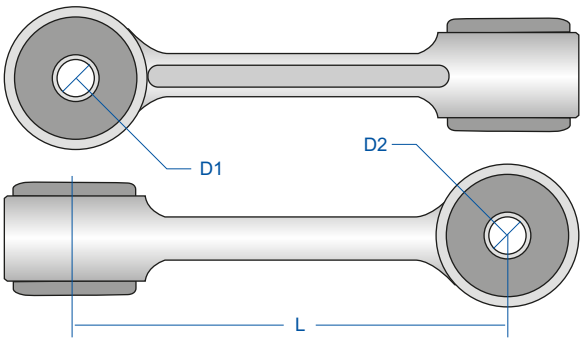
D1
D2
L

H

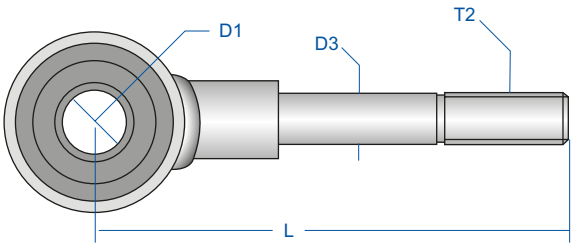
D1
D3
T2
L

J

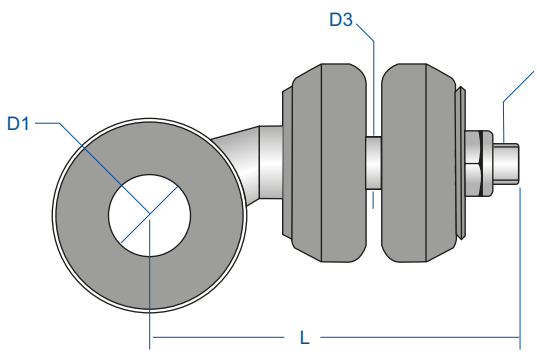
D3
T2
D1
L

K

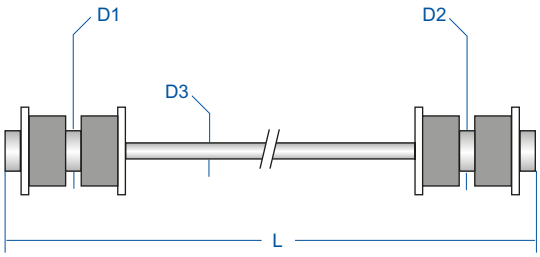
D1
D2
D3
L

MOOG	Z	R9	R>	RA	e9	e>	
AL-LS-0043	200	-	-	8	M10X1.25	M10X1.25	A
AL-LS-0052	124.5	19 (Ch17)	19 (Ch17)	11	M10X1.5	M10X1.5	A
AL-LS-0263	90	(ch 17)	(Ch17)	8	M10X1.5	M10X1.5	A
AL-LS-0266	90	(ch 17)	(Ch17)	8	M10X1.5	M10X1.5	A
AL-LS-10443	113	20	20	9	M10X1.25	M10X1.25	A
AL-LS-10444	113	20	20	9	M10X1.25	M10X1.25	A
AL-LS-1754	145	Ch17	Ch17	8	M10X1.5	M12X1.75	A
AL-LS-3296	95	-	-	8	M10X1.25	M12X1.75	A
AL-LS-3297	95	-	-	14.5	M10X1.25	M10X1.5	A
AL-LS-5093	102	-	-	8	M12X1.75	M12X1.75	A
AL-LS-5094	102	-	-	8	M12X1.75	M12X1.75	A
AL-LS-5095	116	-	-	9	M12X1.5	M12X1.5	A
AL-LS-5096	116	-	-	9	M12X1.5	M12X1.5	A
AL-LS-7410	180	14.1	14.1	20	-	-	F
AL-LS-7411	180	14.1	14.1	20	-	-	F
AL-LS-7542	181	18	18	25	M10X1.5	M10X1.5	B
AU-LS-10678	170	10.9	10.9	-	-	-	F
AU-LS-14840	90	10	10	-	-	-	F
AU-LS-3717	90	M10X1.5	11	14.5	M10X1.5	M10X1.25	-
AU-LS-3718	90	M10X1.5	11	13	M10X1.5	M10X1.5	-
AU-LS-3898	95	10	8.5	8	M10X1.5	-	E/F
AU-LS-4193	194.5	-	-	12.5	M10X1.5	M10X1.5	E/H
AU-LS-4934	110	-	-	-	-	M10X1.5	-
AU-LS-5067	62	12	12	12	-	-	F
AU-LS-5068	62	12	12	12	-	-	F
AU-LS-5421	100	10	10	21.7	-	-	F
AU-LS-5475	100	-	10.3	10	M10X1.5	-	C/H
AU-LS-7376	60	10.2	10.2	-	-	-	G
AU-LS-8044	110	10.2	10.2	-	-	-	F
AU-LS-8241	96.5	12.05	12.05	12	-	-	G
AU-LS-8242	96.5	12	12	15	-	-	G
AU-LS-8295	226.5	Ch16	10.1	15	M10X1.5	M10X1.25	E/H
AU-LS-8296	226.5	Ch16	10.1	18	M10X1.5	M10X1.5	E/H
AU-LS-8351	170	10	10	-	-	-	F
BM-LS-0420	285	-	-	9	M10X1.5	M10X1.5	A
BM-LS-0433	95	8.5	8.3	10.2	-	-	G
BM-LS-0434	269.5	18.5 (Ch16)	18.5 (Ch16)	9	M10X1.5	M10X1.25	A
BM-LS-0485	66	-	-	8	M10X1.5	M10X1.5	A
BM-LS-10438	199.5	20	20	9	M12X1.5	M12X1.5	A
BM-LS-10919	135	-	-	-	M10X1.5	M10X1.5	B
BM-LS-10920	135	-	-	-	M10X1.5	M10X1.5	B
BM-LS-10981	310	11	11	-	M10X1.5	M10X1.5	A
BM-LS-10982	310	11	11	-	M10X1.5	M10X1.5	A
BM-LS-1151	132.5	8.3	6	10	-	-	F
BM-LS-13423	340	-	-	10	M12X1.5	M12X1.5	A
BM-LS-13424	340	-	-	10	M12X1.5	M12X1.5	A
BM-LS-13449	155	-	-	9	M10X1.5	M10X1.5	A
BM-LS-13450	155	-	-	9	M10X1.5	M10X1.5	A
BM-LS-13493	158	20	14	9	M12X1.5	M12X1.5	C
BM-LS-13597	292	-	-	9	M10X1.5	M10X1.5	A
BM-LS-13598	292	-	-	9	M10X1.5	M10X1.5	A
BM-LS-13956	133.5	-	10	-	M10X1.5	-	-
BM-LS-14585	340	21.5	21.5	14	M10X1.5	M10X1.5	B
BM-LS-14586	340	-	-	14	M10X1.5	M10X1.5	A
BM-LS-14782	320	20	20	10	M10X1.5	M10X1.5	A
BM-LS-14876	320	-	-	10	M10X1.5	M10X1.5	A
BM-LS-14888	104	8.4	5	-	-	-	F
BM-LS-1787	60	8	6	-	-	-	F
BM-LS-1886	331	Ch14	Ch14	8	M10X1.25	M10X1.5	C
BM-LS-1887	300	Ch17	Ch17	8	M10X1.25	M10X1.25	A
BM-LS-1890	233	17	17	8	M10X1.5	M10X1.25	A

MOOG	Z	R9	R>	RA	e9	e>	
BM-LS-2115	359	Ch17	Ch17	11	M12X1.5	M10X1.25	A
BM-LS-2116	118	-	-	8	M10X1.5	M10X1.25	A
BM-LS-2117	65	Ch17	Ch17	9	M10X1.5	M10X1.25	A
BM-LS-2434	425	-	-	12	M10X1.5	M10X1.25	A
BM-LS-2435	425	-	-	12	M10X1.5	M10X1.25	A
BM-LS-3675	300	-	-	9	M10X1.5	M10X1.25	A
BM-LS-3676	300	-	-	9	M10X1.25	M10X1.25	A
BM-LS-3690	162	-	-	8	M10X1.5	M12X1.5	C
BM-LS-3725	290	-	-	10	M10X1.5	M10X1.25	A
BM-LS-3727	290	-	-	10	M10X1.5	M10X1.25	A
BM-LS-3743	161	-	8.2	9	M10X1.5	M10X1.25	E/H
BM-LS-3858	94.5	-	-	9	M10X1.5	M12X1.5	A
BM-LS-3859	300	-	-	9	M10X1.5	M10X1.25	A
BM-LS-3860	300	-	-	9	M10X1.5	M10X1.25	A
BM-LS-3967	184	-	-	8	M12X1.5	M10X1.25	C
BM-LS-4195	339.5	-	-	10	M10X1.5	M10X1.25	A
BM-LS-4196	339.5	-	-	10	M10X1.5	M10X1.25	A
BM-LS-4311	67	18	-	11	M10X1.5	M10X1.25	E/H
BM-LS-4429	332	-	-	10	M10X1.5	M10X1.25	A
BM-LS-4430	332	-	-	10	M10X1.5	M10X1.5	A
BM-LS-5198	231	-	-	9	M10X1.5	M10X1.5	A
BM-LS-5609	232.5	Ch16	Ch16	8	M10X1.5	M10X1.5	A
BM-LS-7313	132	-	-	10	M12X1.5	M12X1.5	C
BM-LS-7314	248	-	-	10	M12X1.5	M12X1.5	A
BM-LS-7315	248	-	-	10	M12X1.5	M12X1.5	A
BM-LS-7343	248.5	-	-	10	M12X1.5	M12X1.5	A
BM-LS-7344	248.5	-	-	10	M12X1.5	M12X1.5	A
BM-LS-8768	422	18.7	18.7	11	M10X1.5	M10X1.5	B
BM-LS-8769	422	18.7	18.7	11	M10X1.5	M10X1.5	B
BM-LS-8774	238	-	-	10	M10X1.5	M12X1.5	C
BM-LS-8778	89	7.5	7.5	-	-	-	G
BM-LS-8806	300	-	-	10	M12X1.5	M12X1.5	B
BM-LS-8846	110	-	-	9	M12X1.5	M12X1.5	A
CH-LS-10521	239.5	-	-	10	M12X1.75	-	-
CH-LS-13707	220.5	13.5	12.1	11	-	-	F
CI-LS-0445	362	17	17	9	M12X1.75	M12X1.75	D
CI-LS-1727	380	-	-	18.8	M14X1.5	M14X1.5	-
CI-LS-2468	293.5	-	-	8	M10X1.5	M10X1.25	A
CI-LS-3267	134	14.2	-	-	-	M12X1.25	J
CI-LS-4959	97	8	8	8	M8X1.25	M8X1.25	D/K
CI-LS-7259	263	-	-	10	M12X1.75	M12X1.75	A
CI-LS-7297	290	-	-	9	M10X1.25	M10X1.25	B
CI-LS-7321	110	14	-	12	-	M12X1.25	J
CI-LS-7322	100	-	-	8	M10X1.25	M10X1.25	B
DE-LS-10435	197	-	-	8	M10X1.25	M10X1.25	A
DE-LS-10623	235	-	-	8	M10X1.5	M10X1.5	B
DE-LS-2299	266	-	-	8	M10X1.25	M10X1.25	A
DE-LS-2862	171	-	-	10	M10X1.25	M10X1.25	E
DE-LS-3271	246	-	-	6	M10X1.25	M10X1.25	A
DE-LS-3896	271	-	-	8	M10X1.25	M10X1.25	A
DE-LS-3897	271	-	-	8	M10X1.25	M10X1.25	A
DE-LS-3971	217	-	-	9	M10X1.25	M10X1.25	A
DE-LS-5135	80	-	-	8	M10X1.25	M10X1.25	A
DE-LS-5136	80	-	-	8	M10X1.25	M10X1.25	A
DE-LS-8809	267	-	-	-	M10X1.25	M10X1.25	B
DE-LS-8903	79.5	-	-	8	M12X1.25	M12X1.25	A
DE-LS-8904	79.5	-	-	8	M12X1.25	M12X1.25	A
DI-LS-10505	114	-	-	8	M10X1.25	M10X1.25	-
FD-LS-0090	239	-	-	9	M10X1.25	M10X1.25	A
FD-LS-0122	115	-	-	-	-	-	K
FD-LS-0469	285	-	-	8	M10X1.5	M10X1.25	A

MOOG	Z	R9	R>	RA	e9	e>	
FD-LS-0808	248.5	19 (Ch17)	19 (Ch17)	8	M10X1.5	M10X1.25	A
FD-LS-0950	237.5	-	-	9	M10X1.5	M10X1.5	A
FD-LS-0962	144	16.2	-	14	-	M8X1.25	H
FD-LS-0963	144	16.2	-	14	-	M8X1.25	H
FD-LS-10512	179	-	-	10	M10X1.5	M8X1.5	-
FD-LS-10901	98.9	-	27.6	9	M12X1.75	M10X1.5	C
FD-LS-14891	251	21	21	-	M10X1.5	M10X1.5	B
FD-LS-14945	120.5	25	25	9	M12X1.25	M12X1.25	A
FD-LS-15239	300	21	-	9	M12X1.25	-	A
FD-LS-2016	102	10.4	-	14	-	M10X1.5	J
FD-LS-2049	238	Ch17	Ch17	9	M10X1.5	M10X1.5	A
FD-LS-2051	133	20	20	9	M12X1.5	M10X1.5	A
FD-LS-2259	284.5	-	-	8	M10X1.5	M10X1.5	A
FD-LS-2269	117.5	6.5	-	12	-	M10X1.5	H
FD-LS-2368	248.5	20	20	10	M12X1.75	M12X1.5	C
FD-LS-3274	108	-	-	-	M10X1.5	M10X1.5	C
FD-LS-3286	250	-	-	21	M10X1.5	M10X1.5	B
FD-LS-3662	99	-	-	-	M10X1.5	M10X1.5	E
FD-LS-3667	298	18.2	18.2	9	M10X1.5	M10X1.25	A
FD-LS-4064	206	-	-	10	M10X1.25	M10X1.25	E
FD-LS-4114	237	15	15	8	M10X1.5	M12X1.25	A
FD-LS-5111	298	-	-	9	M10X1.5	M10X1.5	A
FD-LS-5444	400	-	-	-	-	-	-
FD-LS-5445	400	-	-	-	-	-	-
FD-LS-5446	550	12	12	-	-	-	-
FD-LS-5613	347.5	-	-	-	M12X1.5	-	C
FD-LS-5699	179	-	-	-	M10X1.5	M8X1.25	E
FD-LS-5751	148.7	-	-	-	M8X1.25	-	D
FD-LS-6620	312	Ch29.7	16	14	M12X1.25	-	E/H
FD-LS-7924	290	-	-	10	M12X1.5	M12X1.5	B
FD-LS-8093	251.5	-	-	10	M10X1.5	M10X1.5	B
FI-LS-0048	275	18 (Ch16)	18 (Ch16)	9	M10X1.25	M12X1.25	A
FI-LS-0441	114	12.2	-	18	M10X1.25	M10X1.5	J
FI-LS-10828	86	8.7	10	8	-	-	F
FI-LS-14979	280.5	10	-	-	M12X1.25	-	B
FI-LS-2111	118	-	-	8	M10X1.25	M10X1.25	A
FI-LS-2371	290	-	-	9	M10X1.5	M10X1.5	A
FI-LS-3830	315	19	19	9	M10X1.25	M12X1.25	A
FI-LS-4548	300	-	-	8	M10X1.5	M10X1.25	A
FI-LS-5159	270	-	-	8	M10X1.25	M10X1.25	A
FI-LS-8086	297	-	-	9	M10X1.25	M10X1.25	B
FI-LS-8783	132	-	-	8	M10X1.25	M10X1.25	A
FI-LS-8794	81	-	-	8	M10X1.25	M10X1.25	A
HO-LS-10098	150	-	-	8	M10X1.25	M10X1.25	A
HO-LS-10099	150	-	-	8	M10X1.25	M10X1.25	A
HO-LS-10517	72	-	-	9	M10X1.25	M10X1.25	A
HO-LS-10518	72	-	-	9	M10X1.25	M10X1.25	A
HO-LS-13433	125	-	-	9	M10X1.25	M10X1.25	A
HO-LS-13697	80	16.5	16.5	10	M10X1.25	M10X1.25	B
HO-LS-13698	80	16.5	16.5	10	M10X1.25	M10X1.25	B
HO-LS-1605	100	-	-	-	-	-	K
HO-LS-1710	56	-	-	8	M10X1.25	M12X1.5	A
HO-LS-1741	83	Ch14	Ch14	9	M10X1.25	M12X1.25	A
HO-LS-1742	83	-	-	9	M10X1.25	M12X1.25	A
HO-LS-1840	117	16	16	8	M10X1.25	M12X1.25	A
HO-LS-1842	117	16	16	8	M10X1.25	M12X1.5	A
HO-LS-2568	56	-	-	8	M10X1.25	M10X1.5	A
HO-LS-2578	300	19.5	19.5	9	M10X1.25	M10X1.5	A
HO-LS-2579	300	19.5	19.5	9	M10X1.25	M10X1.5	A
HO-LS-2587	150	17	17	8	M10X1.25	M10X1.5	A
HO-LS-2588	150	17	17	8	M10X1.25	M10X1.5	A

MOOG	Z	R9	R>	RA	e9	e>	
HO-LS-2594	55	17.5	17.5	9	M10X1.25	M10X1.25	A
HO-LS-2595	55	17.5	17.5	9	M10X1.25	M10X1.25	A
HO-LS-3824	72	-	-	8	M10X1.25	M10X1.25	A
HO-LS-3825	72	-	-	8	M10X1.25	M10X1.25	A
HO-LS-4192	125	-	-	8	M10X1.25	M12X1.5	A
HO-LS-4549	89	-	-	8	M10X1.25	M12X1.5	A
HO-LS-4550	89	-	-	8	M10X1.25	M10X1.25	A
HO-LS-4632	69	-	-	8	M10X1.25	M10X1.5	A
HO-LS-4687	69	-	-	8	M10X1.25	M12X1.5	A
HO-LS-5725	72.5	-	-	9	M10X1.25	M10X1.25	A
HO-LS-5726	72.5	-	-	9	M10X1.25	M10X1.25	A
HO-LS-5727	226	-	-	9	M10X1.5	M10X1.5	A
HO-LS-7899	75	-	10	-	M10X1.25	M10X1.25	A
HO-LS-7900	75	-	-	10	M10X1.25	M10X1.25	A
HO-LS-7941	318	-	-	10	M12X1.25	M12X1.25	B
HO-LS-7942	85	-	-	9	M10X1.5	M10X1.5	A
HO-LS-7943	85	-	-	9	M10X1.5	M10X1.5	A
HO-LS-8967	320	21.5	21.5	9	M10X1.25	M10X1.25	A
HO-LS-8968	320	21.5	21.5	9	M10X1.25	M10X1.25	A
HY-LS-0971	69.5	13	13	13	-	-	F
HY-LS-10519	140	-	-	8	M12X1.25	M12X1.25	-
HY-LS-10588	-	-	-	-	-	-	-
HY-LS-10595	-	-	-	-	-	-	-
HY-LS-10596	-	-	-	-	-	-	-
HY-LS-10597	161	19	-	10	M12X1.25	M10X1.25	E
HY-LS-10809	267	18	18	10	M12X1.25	M12X1.25	B
HY-LS-13297	282.5	17	17	9	M12X1.25	M12X1.25	B
HY-LS-13305	112	-	-	9	M12X1.25	M12X1.25	E
HY-LS-13467	229	-	-	8	M10X1.25	M10X1.5	A
HY-LS-13468	229	-	-	8	M10X1.25	M10X1.5	A
HY-LS-14801	267	10.9	-	10	M12X1.25	-	B
HY-LS-1833	59	16	16	8	M10X1.25	M10X1.5	A
HY-LS-1845	72	Ch14	Ch14	8	M10X1.25	M12X1.5	A
HY-LS-1910	202	Ch14	Ch14	8	M10X1.25	M12X1.5	A
HY-LS-1911	202	Ch14	Ch14	8	M10X1.25	M12X1.5	A
HY-LS-2233	59	Ch14	Ch14	8	M10X1.25	M10X1.5	A
HY-LS-2380	130	15	15	8	M10X1.25	M10X1.25	A
HY-LS-2610	52	-	-	8	M10X1.5	M12X1.75	A
HY-LS-2616	60	15	15	8	M10X1.25	M10X1.5	A
HY-LS-2625	263	-	-	9	M12X1.25	M10X1.25	A
HY-LS-2626	263.5	-	-	9	M12X1.25	M10X1.5	A
HY-LS-2638	61	-	-	8	M12X1.25	M10X1.5	A
HY-LS-2639	61	-	-	8	M12X1.25	M12X1.25	A
HY-LS-2649	52.5	15	15	8	M10X1.25	M10X1.25	A
HY-LS-2652	103	-	-	8	M10X1.25	M10X1.25	E
HY-LS-2667	180	-	-	8	M10X1.25	M10X1.25	A
HY-LS-3937	103	-	-	9.9	M10X1.25	M12X1.25	E
HY-LS-3938	194	-	-	8	M10X1.25	M12X1.25	A
HY-LS-3940	219	-	-	9	M12X1.25	M12X1.25	A
HY-LS-3941	238	-	-	9	M12X1.25	M10X1.25	A
HY-LS-3998	55	-	-	9	M12X1.25	M10X1.25	A
HY-LS-3999	114.5	-	-	10	M10X1.25	M10X1.25	E
HY-LS-4688	117	-	-	8	M10X1.25	M10X1.25	A
HY-LS-4689	117	-	-	8	M10X1.25	M10X1.25	A
HY-LS-4690	285	-	-	11	M10X1.25	M10X1.25	A
HY-LS-4691	285	-	-	11	M10X1.25	M10X1.25	A
HY-LS-4748	150	-	-	12	M12X1.5	M12X1.5	A
HY-LS-4942	341	-	-	10	M12X1.25	M12X1.25	A
HY-LS-4943	341	-	-	10	M12X1.25	M12X1.25	A
HY-LS-4944	99	-	-	10	M12X1.5	M12X1.5	B
HY-LS-7068	133.5	-	-	8	-	M8X1.25	D/K

MOOG	Z	R9	R>	RA	e9	e>	
HY-LS-7081	286	13.8	13.8	12	M10X1.25	M10X1.25	A
HY-LS-7082	286	13.8	13.8	12	M10X1.25	M10X1.25	A
HY-LS-7936	216	-	-	8	M10X1.25	M10X1.25	B
HY-LS-7937	216	-	-	8	M10X1.25	M10X1.25	B
HY-LS-8896	195	-	-	15	M10X1.25	12	E/H
JA-LS-4044	107	-	-	-	M10X1.5	M10X1.5	C
KI-LS-10613	216	-	-	9	M12X1.25	M12X1.25	A
KI-LS-10614	216	-	-	9	M12X1.25	M12X1.25	A
KI-LS-13943	170	22	22	12	-	M8X1.25	K
KI-LS-2384	84.5	Ch14	Ch14	8	M10X1.25	M10X1.25	A
KI-LS-2670	90.5	Ch14	10.1	8	M10X1.25	M10X1.25	E/H
KI-LS-2673	70	15.5	15.5	9	M10X1.25	M10X1.25	A
KI-LS-2674	104	-	-	8	M10X1.25	M10X1.25	A
KI-LS-2676	104	-	-	9	M10X1.25	M10X1.25	A
KI-LS-3899	64	-	9	9	M12X1.25	M12X1.5	A
KI-LS-4422	240	-	-	8	M10X1.25	M12X1.5	A
KI-LS-4423	240	-	-	8	M10X1.25	M10X1.25	A
KI-LS-4694	218	-	-	8	M10X1.25	M10X1.25	A
KI-LS-4695	218	-	-	8	M10X1.25	M10X1.25	A
KI-LS-4883	230	-	-	-	M10X1.5	M10X1.5	A
KI-LS-4884	230	-	-	-	M10X1.5	M10X1.5	A
KI-LS-7090	243	-	-	10	M12X1.25	M12X1.25	B
KI-LS-7099	243	-	-	10	M12X1.25	M12X1.25	B
KI-LS-7129	250	-	-	11	M10X1.25	M10X1.25	B
KI-LS-7130	250	-	-	11	M10X1.25	M10X1.25	B
KI-LS-7131	130	-	-	10	M10X1	M10X1	B
KI-LS-8342	274	-	-	8	M10X1.25	M10X1.25	B
KI-LS-8343	274	-	-	8	M10X1.25	M10X1.25	B
KI-LS-8842	72.5	-	-	8	M10X1.25	M10X1.25	B
KI-LS-8917	-	-	-	-	-	-	-
KI-LS-8918	-	-	-	-	-	-	-
KI-LS-8923	-	-	-	-	-	-	-
KI-LS-8932	-	-	-	-	-	-	-
KI-LS-8933	-	-	-	-	-	-	-
KI-LS-8934	-	-	-	-	-	-	-
LN-LS-13578	100	18	18	9	M10X1.25	M10X1.25	A
LN-LS-2678	100	-	-	8	M10X1.25	M10X1.25	A
LR-LS-10624	120	-	-	8	M12X1.5	M12X1.5	B
LR-LS-13413	320	20.1	20.1	10	M10X1.5	M10X1.5	B
LR-LS-14641	208	31	31	11	M14X2	M14X2	B
LR-LS-14643	190	31	31	12	M14X2	M14X2	A
LR-LS-14644	190	31	31	12	M14X2	M14X2	A
LR-LS-14865	184	-	-	11	M14X2	M14X2	A
LR-LS-14866	184	-	-	11	M14X2	M14X2	A
LR-LS-1866	-	-	-	9	M12X1.5	M10X1.25	C
LR-LS-2681	108	17.5	17.5	20.5	M12X1.75	M10X1.25	E/H
LR-LS-2682	278.8	17.9	17.9	12	M12X1.25	-	C
LR-LS-2683	132.5	-	-	12	M12X1.5	M10X1.25	C
LR-LS-3310	129	-	-	8	M10X1.25	M10X1.25	A
LR-LS-4013	380	-	-	11	M12X1.5	M12X1.25	A
LR-LS-4045	116.5	-	-	8	M12X1.75	M12X1.75	A
LR-LS-4053	120	-	-	8	M12X1.5	M12X1.25	A
LR-LS-4189	301	-	-	10	M12X1.75	M10X1.25	C
LR-LS-7011	344.5	-	-	12	M14X2	M14X2	A
LR-LS-7042	344.5	-	-	12	M14X2	M14X2	A
LR-LS-8087	229	-	-	9	M10X1.5	M10X1.5	B
LR-LS-8088	347.5	-	-	11	M10X1.5	M10X1.5	B
LR-LS-8913	131	-	-	9	M12X1.75	M12X1.75	B
MD-LS-0972	253	16	16	9	M10X1.25	M10X1.5	A
MD-LS-1117	104	18	18	8	M10X1.25	M10X1.5	A
MD-LS-1127	104	18	18	8	M10X1.25	M10X1.5	A

MOOG	Z	R9	R>	RA	e9	e>	
MD-LS-1181	190	16	16	8	M10X1.25	M10X1.5	A
MD-LS-13870	288	-	-	9	M10X1.25	M10X1.25	A
MD-LS-13897	150	-	-	8	M10X1.25	M12X1.75	A
MD-LS-14572	150	-	-	8	M10X1.25	M12X1.75	A
MD-LS-14985	306.5	-	-	9	M10X1.25	-	A
MD-LS-15085	284	19	19	9	M10X1.25	M10X1.25	A
MD-LS-15086	284	19	19	9	M10X1.25	M10X1.25	A
MD-LS-2636	190	-	-	8	M10X1.25	M10X1.5	A
MD-LS-2689	55	-	-	9	M10X1.25	M10X1.5	A
MD-LS-2693	107	10.2	10.2	10	-	-	F
MD-LS-2694	104	-	-	8	M10X1.25	M10X1.5	A
MD-LS-3315	230	-	-	8	-	M10X1.5	A
MD-LS-3627	159	16.8	16.8	8	M10X1.25	M12X1.5	A
MD-LS-3881	265	-	-	8	M10X1.25	M12X1.5	A
MD-LS-3895	177	-	-	16	M16X1.5	M10X1.5	E
MD-LS-3942	149.5	-	-	10	M12X1.5	M10X1.25	C
MD-LS-3981	85	-	-	10	M12X1.25	M10X1.25	A
MD-LS-3982	85	-	-	10	M12X1.25	M10X1.25	A
MD-LS-4026	155	-	-	8	M10X1.25	M12X1.25	A
MD-LS-4395	77	-	-	8	M10X1.25	M12X1.25	E/H
MD-LS-4396	155	-	-	8	M10X1.25	M12X1.25	A
MD-LS-4434	176	-	-	8	M10X1.25	M12X1.25	A
MD-LS-4435	53	-	-	8	M10X1.25	M10X1.5	A
MD-LS-4436	53	-	-	8	M10X1.25	M10X1.25	A
MD-LS-7400	325	-	-	9	M10X1.25	M10X1.25	B
MD-LS-9006	95	-	-	8	M10X1.25	M10X1.25	-
MD-LS-9089	159	-	-	8	M10X1.25	-	A
MD-LS-9090	159	-	16	8	-	M10X1.25	A
ME-LS-0435	250	(ch16)	(Ch16)	9	M10X1.5	M10X1.25	A
ME-LS-0436	105	10.5	10.5	8	-	-	F
ME-LS-0489	220	18 (Ch16)	18 (Ch16)	9	M10X1.5	M12X1.25	A
ME-LS-0725	148.5	12.3	12.3	9	-	-	G
ME-LS-0726	148.5	12.3	12.3	9	-	-	G
ME-LS-10158	227.5	-	-	-	M10X1.5	M10X1.5	A
ME-LS-10471	324	-	-	-	M12X1.5	M12X1.5	B
ME-LS-10529	290	20.3	20.3	10	M12X1.5	M12X1.5	A
ME-LS-10530	290	20.3	20.3	10	M12X1.5	M12X1.5	A
ME-LS-13437	333	20	20	12	M12X1.5	M12X1.5	B
ME-LS-13438	79	10		10	-	M10X1.5	-
ME-LS-13695	335	20.14	11.7	13	M12X1.25	M12X1.5	C
ME-LS-13696	335	20.14	11.7	13	M12X1.25	M12X1.5	C
ME-LS-13911	275	-	-	10	M12X1.5	M12X1.5	A
ME-LS-13912	275	-	-	10	M12X1.5	M12X1.5	A
ME-LS-13975	329	-	12	12	M12X1.5	-	-
ME-LS-13976	329	-	12	12	M12X1.5	-	-
ME-LS-14645	231	M10X1.5	8	-	-	-	G
ME-LS-14646	231	M10X1.5	8	-	-	-	G
ME-LS-14771	252	-	12.1	16	M12X1.5	-	C
ME-LS-14772	252	-	12.1	16	M12X1.5	-	C
ME-LS-15113	141.5	-	14.3	-	M14X1.5	-	G
ME-LS-15114	141.5	-	14.3	-	M14X1.5	-	G
ME-LS-15299	307.5	10.5	20	14	M12X1.5	M12X1.5	A
ME-LS-15300	307.5	10.5	20	14	M12X1.5	M12X1.5	A
ME-LS-15397	285	18.5	18.5	9	M12X1.5	M12X1.5	A
ME-LS-15398	285	18.5	18.5	9	M12X1.5	M12X1.5	A
ME-LS-1654	200	-	-	8	M10X1.5	M10X1.5	E/H
ME-LS-1759	276	-	-	9	M10X1.5	M12X1.5	A
ME-LS-1977	115	-	-	10	-	-	G
ME-LS-1978	115	13	13	10.8	-	-	G
ME-LS-1979	95	12.5	-	-	-	-	G
ME-LS-2060	244	-	-	9	M10X1.5	M12X1.75	A

MOOG	Z	R9	R>	RA	e9	e>	
ME-LS-2062	87	-	-	-	M10X1.5	10.4	E/H
ME-LS-2078	325.5	-	-	9	M10X1.5	M12X1.25	A
ME-LS-2248	105	10.5	10.5	8	-	-	F
ME-LS-2252	230	-	-	9	M10X1.5	M12X1.25	A
ME-LS-2254	230	-	-	9	M10X1.5	M12X1.25	A
ME-LS-2386	72	-	-	8	M10X1.5	M10X1.5	C
ME-LS-2714	230	-	-	-	M10X1.5	M10X1.5	A/B
ME-LS-2726	175	-	-	12	-	-	F
ME-LS-2727	175	-	-	12	-	-	F
ME-LS-2857	148.5	19	-	10	M10X1.5	M10X1.5	A
ME-LS-3316	259.5	-	-	10	M10X1.5	M10X1.5	A
ME-LS-3542	280	-	-	10	M12X1.5	M10X1.5	A
ME-LS-3819	280	-	-	10	M12X1.5	M10X1.5	A
ME-LS-4179	113.5	-	-	-	-	M10X1.5	H
ME-LS-4180	175	-	-	12	-	-	F
ME-LS-4389	223	-	-	24.5	M10X1.5	M10X1.5	B
ME-LS-4698	195	-	-	12	M14X1.5	M10X1.5	A
ME-LS-4699	117	-	-	10	M14X1.5	M10X1.25	A
ME-LS-4700	242.5	-	-	10	M12X1.5	M10X1.5	C
ME-LS-4701	242.5	-	-	10	M12X1.5	M10X1.25	C
ME-LS-4890	138	-	-	10	M12X1.5	M12X1.5	A
ME-LS-4891	138	-	-	10	M12X1.5	M12X1.5	A
ME-LS-5144	207	-	-	9	M10X1.5	M10X1.5	A
ME-LS-5170	241	-	-	8	M10X1.5	M10X1.5	C
ME-LS-5171	241	-	-	8	M10X1.5	M10X1.5	C
ME-LS-5595	205	-	-	12	M14X1.5	M14X1.5	A
ME-LS-5618	212	35	12	12	-	-	-
ME-LS-5628	188	10.2	10.2	7.5	-	-	G
ME-LS-5629	188	10.2	10.2	7.5	-	-	G
ME-LS-5678	306.3	-	-	14	M12X1.5	M12X1.5	B
ME-LS-5679	306.3	-	-	14	M12X1.5	M12X1.5	B
ME-LS-5682	227.5	10	8.5	10	M10X1.5	-	E/H
ME-LS-5683	227.5	8.5	10	10	-	M10X1.5	H/E
ME-LS-7251	222.3	-	-	18	-	M8X1.25	D
ME-LS-7252	132	12	33	-	-	-	F
ME-LS-7253	132	12	33	-	-	-	F
ME-LS-7295	255	-	-	10	M12X1.5	M12X1.5	B
ME-LS-7995	302	12	-	14	-	12	H
ME-LS-8893	229.5	12	-	14	-	12	H
ME-LS-8946	244	-	-	9	M10X1.5	M10X1.5	A
ME-LS-9010	277	-	-	10	M12X1.5	M12X1.5	A
MI-LS-1615	120	-	-	8	M10X1.25	M12X1.5	A
MI-LS-2268	75	15.5	15.5	8	M10X1.25	M10X1.25	A
MI-LS-2451	146	13	13	13	-	M10X1.25	K
MI-LS-2768	60	-	-	8	M10X1.25	M12X1.5	A
MI-LS-2776	89	-	-	-	M12X1.25	M10X1.25	E
MI-LS-3328	113	-	-	10	M10X1.25	M10X1.25	E
MI-LS-4702	78	-	-	8	M12X1.25	M10X1.25	A
MI-LS-4703	78	-	-	8	M12X1.25	M10X1.25	A
MI-LS-5076	115	-	-	10	M12X1.25	M10X1.25	A
MI-LS-5077	115	-	-	10	M12X1.25	M10X1.25	A
MI-LS-7243	79	-	-	9	M12X1.25	12	E/H
MI-LS-7244	79	-	-	9	M12X1.25	12	E/H
MI-LS-7309	130	-	-	14	-	M10X1.25	D
MI-LS-7383	130	-	-	-	M10X1.25	-	E
MI-LS-7403	195	10	10	10	-	M10X1.25	K
MI-LS-8427	150	24.8	28.8	13	M10X1.25	-	K
MI-LS-8959	65	-	-	9	M12X1.25	M12X1.25	A
MI-LS-8960	65	-	-	9	M12X1.25	M12X1.25	A
NI-LS-10160	90	21.5	21.5	8	M10X1.25	M12X1.25	A
NI-LS-10692	284	-	-	11	M12X1.25	M12X1.25	A

MOOG	Z	R9	R>	RA	e9	e>	
NI-LS-1168	85.5	Ch15	-	10	M10X1.25	M10X1.5	E/H
NI-LS-1169	123.5	-	-	12	M10X1.5	M12X1.5	E/J
NI-LS-1674	98	Ch15	-	10	M10X1.25	M12X1.5	E/J
NI-LS-2307	65	-	-	-	M10X1.5	M10X1.5	A
NI-LS-2308	65	-	-	-	M10X1.5	M10X1.5	A
NI-LS-2778	90.5	10.5	-	10	M10X1.25	M10X1.25	E
NI-LS-2779	65	-	-	10	M10X1.5	M10X1.5	A
NI-LS-2798	65	-	-	10	M10X1.25	M12X1.75	A
NI-LS-2804	64	-	-	12	M12X1.25	M10X1.5	A
NI-LS-2805	64	-	-	12	M12X1.25	M10X1.25	A
NI-LS-4067	115	-	-	8	M10X1.25	M10X1.25	A
NI-LS-4887	65	-	-	10	M12X1.25	M12X1.25	A
NI-LS-4888	65	-	-	10	M12X1.25	M12X1.25	A
NI-LS-5735	90.5	20	20	8	M10X1.5	M10X1.5	A
NI-LS-7227	300	-	-	11	M12X1.25	M12X1.25	A
NI-LS-7228	300	-	-	11	M12X1.25	M12X1.25	A
NI-LS-7246	131	18.9	18.9	-	M12X1.5	M12X1.5	A
NI-LS-7247	131	18.9	18.9	-	M12X1.5	M12X1.5	A
NI-LS-7766	143	12.2	12.2	15	-	-	F
NI-LS-7767	143	12.2	12.2	15	-	-	F
NI-LS-8421	64	-	-	10	M12X1.25	M12X1.25	A
NI-LS-8422	64	-	-	10	M12X1.25	M12X1.25	A
NI-LS-8457	255	-	-	9	M10X1.5	M10X1.5	B
NI-LS-9056	282	-	-	8	M10X1.25	M10X1.25	B
OP-LS-0515	300	19 (Ch16)	19 (Ch16)	9	M12X1.5	M12X1.5	A
OP-LS-0993	83.5	18	-	-	-	-	J
OP-LS-10475	330	-	-	9	M10X1.5	M10X1.5	A
OP-LS-10476	106	-	-	9	M10X1.5	-	-
OP-LS-13414	310	-	-	9	M10X1.5	M10X1.5	A
OP-LS-13625	290	11.3	11.3	9	M12X1.75	M12X1.75	A
OP-LS-13626	290	11.3	11.3	9	M12X1.75	M12X1.75	A
OP-LS-13685	286	-	-	10	M12X1.75	M12X1.75	A
OP-LS-13686	286	-	-	10	M12X1.75	M12X1.75	A
OP-LS-15333	306.5	24	-	10	M12X1.75	-	A
OP-LS-15334	306.5	-	24	10	-	M12X1.75	B
OP-LS-15394	304	11.2	-	-	M12X1.75	-	B
OP-LS-1786	150	-	-	8	M10X1.5	M10X1.5	A
OP-LS-1994	113.5	-	-	20	-	-	H
OP-LS-2018	200	30	30	-	-	-	K
OP-LS-2080	354	19	19	9	M12X1.5	M12X1.5	A
OP-LS-2328	180	20	20	12	-	-	C
OP-LS-2329	180	-	-	12	-	-	F
OP-LS-2811	150	19	19	8	M10X1.5	M10X1.5	A
OP-LS-2821	300	Ch17	Ch17	11	M12X1.5	M12X1.5	A
OP-LS-3815	126	10	11.5	17.5	-	-	F
OP-LS-4706	285.5	-	-	10	M12X1.75	M12X1.75	A
OP-LS-4707	285.5	-	-	10	M12X1.75	M12X1.75	A
OP-LS-5575	225	Ch17	Ch17	8	M12X1.5	M12X1.5	A
OP-LS-5582	243.5	-	-	-	M12X1.25	M12X1.25	A
OP-LS-5739	354	-	-	12	M12X1.5	M12X1.5	A
OP-LS-6993	80	10	10	17.3	-	-	F
OP-LS-7224	169.5	-	13	10	M10X1.5	M10X1.5	E/K
OP-LS-7446	304	-	-	9	M12X1.75	M12X1.75	B
OP-LS-8349	304	-	-	-	M12X1.75	M12X1.75	B
OP-LS-8350	70.8	10.2	10.2	12	M10X1.5	-	F
PE-LS-0592	320	-	-	-	M12X1.5	M12X1.5	A
PE-LS-0595	323	18	20	11	M10X1.5	M10X1.5	C
PE-LS-0785	245	18.8	-	13	M12X1.25	-	E/H
PE-LS-1048	122	12.15	-	20	M12X1.25	-	J
PE-LS-1118	195	12.6	12.2	12	-	-	G
PE-LS-1573	335	-	-	-	M10X1.5	M10X1.5	A

MOOG	Z	R9	R>	RA	e9	e>	
PE-LS-3324	200	32.5	32.5	12	M16X1.5	M12X1.75	A
PE-LS-3325	200	32.5	32.5	-	M12X1.75	M16X1.5	A
PE-LS-3326	141	18.5	18.5	8	M10X1.5	M10X1.5	A
PE-LS-3817	335	-	-	11	M10X1.5	M10X1.5	A
PE-LS-3989	330	-	-	-	M10X1.5	M10X1.5	A
PE-LS-3990	330	-	-	-	M10X1.5	M10X1.5	A
PE-LS-5046	300	-	-	10	M10X1.5	M10X1.5	A
PE-LS-7423	80	-	-	8	M10X1.25	M10X1.25	A
PE-LS-7424	80	-	-	8	M10X1.25	M10X1.25	A
PE-LS-7425	265	-	-	8	M10X1.25	M10X1.25	B
RE-LS-10543	-	-	-	-	-	-	-
RE-LS-1058	127	-	-	-	M10X1.5	M10X1.5	A
RE-LS-1059	127	-	-	-	M10X1.5	M10X1.5	A
RE-LS-1072	287	-	-	8	M10X1.5	M10X1.5	A
RE-LS-13461	130	10.3	10.3	10.3	-	-	F
RE-LS-14775	86	19	19	10	M10X1.5	M10X1.5	A
RE-LS-14776	86	19	19	10	M10X1.5	M10X1.5	A
RE-LS-14822	264	19	19	10	M10X1.5	M10X1.5	B
RE-LS-2088	283	18.5	18.5	9	M10X1.5	M10X1.5	A
RE-LS-2095	279	18 (Ch16)	18 (Ch16)	8	M10X1.5	M10X1.5	A
RE-LS-2100	273	-	-	8	M10X1.25	M10X1.25	A
RE-LS-3072	287	-	-	8	M10X1.5	M10X1.5	A
RE-LS-4008	70.5	-	-	27.9	-	-	K
RE-LS-4439	154	-	-	9	M10X1.5	M10X1.5	A
RE-LS-5740	78	-	-	-	-	-	-
RE-LS-7304	295	-	-	9	M10X1.5	M10X1.5	B
RE-LS-7407	266	-	-	8	M10X1.5	M10X1.5	B
RE-LS-7977	257	-	-	-	M10X1.5	M10X1.5	B
RE-LS-7996	154	-	-	8	M12X1.25	M12X1.25	B
RE-LS-7999	274.5	20	20	9	M10X1.5	M10X1.5	B
RO-LS-1831	66	10	10	10	-	-	G
RO-LS-1984	105	15.5	10.1	10	M10X1.5	-	E/H
RO-LS-1985	105	15.5	10.1	10	M10X1.5	-	E/H
RO-LS-1986	285	-	-	10	M10X1.5	M10X1.5	C
SE-LS-2850	75	15	-	16	-	M12X1.75	J
SU-LS-13523	107	15	-	8	M10X1.25	-	C
SU-LS-4118	97	-	-	-	-	-	-
SU-LS-7902	60.5	-	10	-	M10X1.25	M10X1.25	B
SU-LS-7940	70	-	-	9	M10X1.25	M10X1.25	A
SU-LS-7988	90.5	17	17	8	M10X1.25	M10X1.25	A
SU-LS-8902	66	10.4	8.5	14	-	-	F
SZ-LS-5081	300	-	-	8	M10X1.25	M10X1.25	A
SZ-LS-5614	149.5	14.5 (Ch12)	14.5 (Ch12)	8	M12X1.25	M12X1.25	A
SZ-LS-5615	149.5	14.5 (Ch12)	14.5 (Ch12)	8	M12X1.25	M12X1.25	A
SZ-LS-7318	300	-	-	10	M10X1.25	M10X1.25	A
SZ-LS-7944	112	-	-	8	M10X1.25	M8X1.25	C
TO-LS-0376	60.5	-	-	10	M10X1.25	M10X1.25	A
TO-LS-10549	139	-	-	10	M12X1.25	M12X1.25	A
TO-LS-10650	151	14	14	-	-	-	G
TO-LS-10681	252	16.8	16.8	9	M10X1.25	M10X1.25	-
TO-LS-10757	139	-	-	10	M12X1.25	M12X1.25	A
TO-LS-1146	104	16	16	9	M10X1.25	M10X1.25	A
TO-LS-1187	71.5	-	-	8	M10X1.5	M10X1.5	A
TO-LS-1191	71.5	-	-	8	M10X1.5	M10X1.5	A
TO-LS-1663	250	Ch17	Ch17	10	M12X1.5	M12X1.5	A
TO-LS-1676	250	-	-	10	M12X1.5	M12X1.5	A
TO-LS-2976	285	16	16	9	M10X1.25	M10X1.25	A
TO-LS-2980	284	17.5	17.5	9	M12X1.25	M12X1.25	A
TO-LS-2983	280	17.5	17.5	10	M12X1.25	M12X1.25	A
TO-LS-2993	285	-	-	9	M10X1.25	M10X1.25	A
TO-LS-3000	260	-	-	10	M12X1.5	M12X1.5	A

MOOG	Z	R9	R>	RA	e9	e>	
TO-LS-3367	140	-	-	8	M10X1.25	M10X1.25	A
TO-LS-3984	140	-	-	10	M12X1.25	M12X1.25	A
TO-LS-4120	127	-	-	8	M10X1.25	M10X1.25	A
TO-LS-4128	127	-	-	8	M10X1.25	M10X1.25	A
TO-LS-4157	237	-	-	10	M10X1.5	M10X1.5	A
TO-LS-4159	111	-	-	8	M10X1.25	M10X1.25	A
TO-LS-4166	225	-	-	-	M10	M10	A
TO-LS-4167	100	-	-	8	M10X1.25	M10X1.25	A
TO-LS-4168	100	-	-	8	M10X1.25	M10X1.25	A
TO-LS-4291	140	-	-	10	M12X1.25	M12X1.25	A
TO-LS-4709	285	-	-	10	M10X1.25	M10X1.25	A
TO-LS-4710	285	-	-	10	M10X1.25	M10X1.25	A
TO-LS-4733	97	-	-	8.5	-	-	K
TO-LS-4983	177.5	-	-	11.9	M12X1.25	M10X1.25	E
TO-LS-4986	152.5	-	16	10	M12X1.25	M8X1.25	C
TO-LS-4997	173.5	-	-	10	M8X1.25	M12X1.25	E
TO-LS-5090	360	-	-	10	M12X1.25	M12X1.25	A
TO-LS-5141	63.5	-	-	8	M12X1.5	M12X1.5	A
TO-LS-6580	360	-	-	12	M12X1.25	M12X1.25	A
TO-LS-6581	136	-	-	16	M12X1.25	M10X1.25	E
TO-LS-7869	74	10.2	-	10	-	M10X1.25	-
TO-LS-7870	74	10.2	-	10	-	M10X1.25	-
TO-LS-8428	-	-	-	-	M12X1.25	M10X1.25	-
TO-LS-8888	171.5	-	-	10	M12X1.25	M10X1.25	E
TO-LS-8966	93.5	10.2	-	12.7	-	M10X1.25	-
VO-LS-0157	88	-	-	-	M10X1.5	M10X1.5	A
VO-LS-0318	205	-	-	-	M12X1.5	M12X1.5	A
VO-LS-0356	89.7	11	11	-	-	-	F
VO-LS-0357	89.7	11	11	-	-	-	F
VO-LS-0418	95	10	-	12	M10X1.5	-	E/H
VO-LS-0456	336	-	-	11	M12X1.5	M12X1.5	A
VO-LS-0463	75	16	-	10.3	M8X1.25	-	J
VO-LS-0475	105	10.5	-	8	M10X1.5	-	E/H
VO-LS-0494	270	19	19	8	M10X1.5	M10X1.5	A
VO-LS-0584	298	12.2	14.2	-	-	-	F
VO-LS-10912	199	-	-	8	M10X1.5	M12X1.5	A
VO-LS-13587	199	17	17	8	M12X1.5	M10X1.5	A
VO-LS-13724	145	12	12	12	-	-	F
VO-LS-13744	70	-	8.3	-	M10X1.5	-	-
VO-LS-13833	14	12	-	-	-	-	-
VO-LS-13963	335	-	-	-	M12X1.5	M12X1.5	A
VO-LS-1516	77	16.5	-	-	-	-	J
VO-LS-1870	335	Ch17	Ch17	10	M12X1.5	M12X1.5	A
VO-LS-2205	298	12.2	14.2	-	-	-	F
VO-LS-2271	90	-	-	10	-	M10X1.5	E/H
VO-LS-2311	259	-	-	10	M12X1.5	M12X1.5	A
VO-LS-2406	336	-	-	11	M12X1.5	M12X1.5	A
VO-LS-2419	293	-	-	-	M12X1.5	-	E/H
VO-LS-2421	122.5	18 (Ch16)	8.5	8	M10X1.5	M10X1.5	A
VO-LS-2422	58	-	-	8	M10X1.5	-	E/H
VO-LS-3053	197	12.2	12.2	10	-	-	G
VO-LS-3353	94	18.5	-	-	M8X1.25	-	J
VO-LS-3680	175	-	-	8	M10X1.5	-	E/H
VO-LS-3980	241	12.2	-	8	M12X1.5	-	E/H
VO-LS-4397	201	-	-	15	M12X1.5	-	E/H
VO-LS-4398	201	-	-	15	M12X1.5	-	E/H
VO-LS-4916	105	10.5	-	-	M10X1.5	-	E/H
VO-LS-4931	51	-	8.5	-	M10X1.5	-	E/F
VO-LS-6994	79	17.5	-	10.8	-	M12X1.75	J
VO-LS-7327	105	10	10	-	-	-	G
VO-LS-8240	120	-	-	-	M10X1.5	M10X1.5	A

MOOG	Z	R9	R>	RA	e9	e>	
VV-LS-0014	200	15	15	8	M10X1.25	M10X1.25	A
VV-LS-0482	245	-	-	-	M10X1.5	M10X1.5	A
VV-LS-1096	168	-	-	9	M12X1.75	M12X1.75	A
VV-LS-1099	141	12.7	-	10	M10X1.5	-	J
VV-LS-1119	331.25	18 (Ch16)	18 (Ch16)	10	M10X1.5	M12X1.75	A
VV-LS-13272	112.5	20.3	-	-	-	-	J/G
VV-LS-1432	103.5	15	-	-	M10X1.25	M10X1.25	E
VV-LS-2112	267	-	-	9	M10X1.25	M10X1.25	A
VV-LS-4171	63	10.5	10.5	10	-	-	F
VV-LS-6592	143	-	12.3	18	-	-	F
VV-LS-7324	259	-	12.3	18	-	-	F

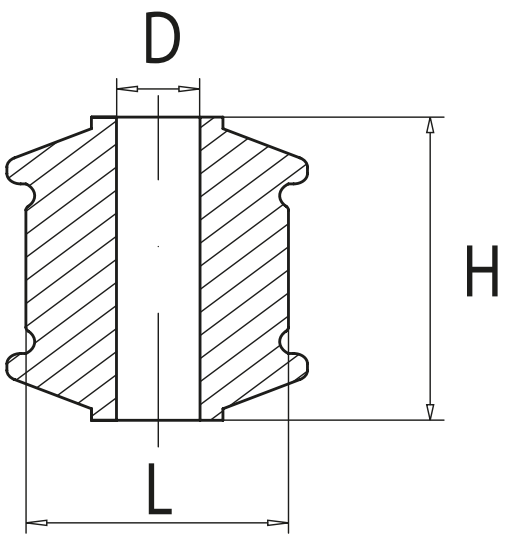

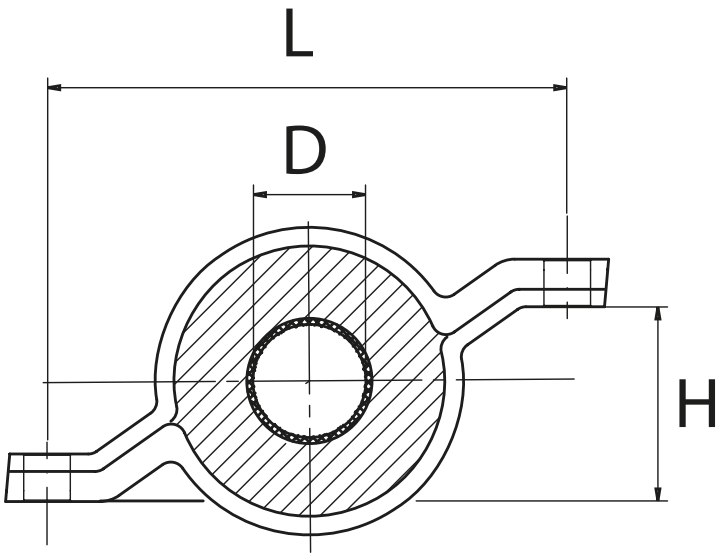

MOOG	Z	R	V
AL-SB-0499	92	21	52
AL-SB-0500	92	21	52
AL-SB-0501	83	21	50
AL-SB-0502	83	21	50
AL-SB-0503	38.5	12.2	30
AL-SB-0527	40.2	12	30
AL-SB-10777	47.8	14.2	67.5
AL-SB-10778	54.8	-	59.85
AL-SB-10834	32.2	12	32
AL-SB-1720	42	12.2	76
AL-SB-1721	40	10.2	38
AL-SB-2391	60	22	41
AL-SB-2396	42	12.1	72
AL-SB-2397	114	20	52
AL-SB-2398	109	-	39
AL-SB-2399	40	10.2	38
AL-SB-2402	47.2	12	50
AL-SB-3170	83	20	30.5
AL-SB-5101	43.2	13	40
AL-SB-5102	41.2	13	40
AL-SB-5103	42.2	14.2	76
AL-SB-5104	120	32	61
AL-SB-5105	120	32	61
AL-SB-5106	42	14	76
AL-SB-6628	-	14	-
AL-SB-6687	38.5	22	-
AL-SB-6688	-	21	-
AL-SB-7338	83	18.9	30.5
AL-SB-7339	83	18.9	30.5
AL-SB-7340	92	20	47.5
AL-SB-7341	92	20	47.5
AU-SB-1037	53	16.2	23
AU-SB-10586	63	12.2	80
AU-SB-10798	52.5	23.5	44.5
AU-SB-1097	54.5	15.1	48
AU-SB-13374	32	16	30
AU-SB-13386	50	26	44
AU-SB-13664	55.5	12.2	55
AU-SB-13742	50	28	44
AU-SB-13832	75	13	80
AU-SB-14731	36	22	30

MOOG	Z	R	V
AU-SB-15103	25.5	10.9	32
AU-SB-1722	62	23	42
AU-SB-3878	52	15.2	48
AU-SB-3879	62.5	18.3	41.5
AU-SB-4455	74	12.8	101
AU-SB-4479	60	12.2	58
AU-SB-4500	55.6	-	25.5
AU-SB-4525	63	12.1	59
AU-SB-4843	65	12.3	79.9
AU-SB-4844	55.3	12.3	59.8
AU-SB-4847	39	21	26.4
AU-SB-5236	44	12.2	60
AU-SB-5635	57.6	12	60
AU-SB-7256	45.3	12.2	54
AU-SB-7331	60	13.5	41
AU-SB-7357	46.4	10.1	40
AU-SB-7436	33	21	34.5
AU-SB-7439	50.2	12	55
AU-SB-7443	-	-	67
AU-SB-7444	80.5	-	73.5
AU-SB-7755	-	-	-
AU-SB-7889	44.4	14.1	40
AU-SB-7890	44.3	12	40
AU-SB-7891	36.2	12.3	30
AU-SB-7912	-	29	44
AU-SB-8039	90	12.3	72.5
AU-SB-8106	40.3	12.4	37
AU-SB-8107	27.5	10.2	34.8
BM-SB-0353	66	19	61.2
BM-SB-10456	-	19	83
BM-SB-10457	-	19	83
BM-SB-10461	49.6	12	44
BM-SB-10462	51.3	14	60.3
BM-SB-10463	50.5	14	60
BM-SB-10467	70.2	14.3	85.6
BM-SB-10728	140	-	-
BM-SB-10783	-	-	-
BM-SB-10915	43	14	55
BM-SB-10916	56.2	15.2	89.5
BM-SB-10958	40	10	32.7
BM-SB-10959	144	12.25	66

MOOG	Z	R	V
BM-SB-10960	113	14.25	37
BM-SB-10961	152	16	65
BM-SB-10983	70	12	95
BM-SB-10992	34.5	12	40
BM-SB-10994	75	17.1	70
BM-SB-10996	50.7	12.1	54
BM-SB-10997	43.5	17	55
BM-SB-1128	60.5	18	33.6
BM-SB-12540	41	21.5	38
BM-SB-12541	32	16	25
BM-SB-13380	65.5	14	84
BM-SB-13382	41	16	38
BM-SB-13383	41	24	38
BM-SB-13384	41	23.5	38
BM-SB-13385	32	18	25
BM-SB-13400	59	21.5	55
BM-SB-13426	46	12	54
BM-SB-13446	70.2	29	70.5
BM-SB-13447	160	21	-
BM-SB-13448	160	21	-
BM-SB-13489	71.5	14.3	60
BM-SB-13490	60	23	55
BM-SB-13491	60	21.5	55
BM-SB-13492	70.2	12.1	66
BM-SB-13494	48	21	46
BM-SB-13495	60	24	55
BM-SB-13508	48	12.5	46
BM-SB-13688	47	12	56
BM-SB-13722	51	14	39
BM-SB-13723	38	12	45
BM-SB-13951	52	12.1	48
BM-SB-13952	46.5	12.1	46
BM-SB-13966	47.2	14	62
BM-SB-14569	70	12	80
BM-SB-14582	48	14	46
BM-SB-14599	60	12	55
BM-SB-14609	42	16.5	46.5
BM-SB-14610	69	14	55.5
BM-SB-14611	57	-	30.5
BM-SB-14613	-	23.5	55
BM-SB-14614	61	12.3	50

MOOG	Z	R	V
BM-SB-14615	-	18	40
BM-SB-14636	44.8	12.2	48
BM-SB-14665	-	19.5	41
BM-SB-14666	-	17.5	41
BM-SB-14873	37.2	12.1	44.2
BM-SB-14878	21	12.2	34.5
BM-SB-14968	45	12	49
BM-SB-14970	39	12	48
BM-SB-14989	45.5	14	65
BM-SB-14999	47	14	48.5
BM-SB-15100	-	12	40
BM-SB-15106	-	17	55
BM-SB-15109	-	15	55
BM-SB-15245	45	11	46
BM-SB-15246	45	13	46
BM-SB-1591	46	12	52
BM-SB-2200	47.1	10.1	40
BM-SB-2201	49	12.1	65
BM-SB-2202	66.2	-	53.75
BM-SB-2213	58	12	68
BM-SB-2232	60.5	18	61
BM-SB-2427	47	12.2	40.1
BM-SB-2429	68	14	76
BM-SB-2433	66.2	14.3	76
BM-SB-2760	66.5	20	61
BM-SB-3614	74	19.1	92.5
BM-SB-3678	-	-	-
BM-SB-3689	70	12.2	76
BM-SB-3694	57	16.3	67.3
BM-SB-3695	47.2	10	41
BM-SB-3724	-	-	-
BM-SB-3734	70	12.2	76.1
BM-SB-3737	46.3	12.1	71
BM-SB-3966	71.5	12.5	60
BM-SB-3978	35.3	12	66.4
BM-SB-4412	66.4	14.3	76.2
BM-SB-4453	59	14.4	84
BM-SB-4477	36	10.2	55
BM-SB-4483	48	12.2	57
BM-SB-4495	35.5	12.2	57
BM-SB-4510	58.5	-	69
BM-SB-4521	70.4	12.4	58.5
BM-SB-4522	58.2	12.5	70.2
BM-SB-4524	71.5	20	61.5
BM-SB-4534	47.5	13.3	47
BM-SB-4842	45.2	12.1	56.8
BM-SB-5013	146	19	33
BM-SB-5014	146	19	33
BM-SB-5608	66.5	20	61
BM-SB-5625	47.3	14.2	54.85
BM-SB-5645	48.5	12	65
BM-SB-6709	53	21	60.5
BM-SB-6738	31	16	40
BM-SB-6752	53	25	61
BM-SB-6753	53	23.5	61
BM-SB-6754	53	24	61
BM-SB-6756	-	16	-
BM-SB-6757	59	24	54.5
BM-SB-6759	58.5	22.5	61
BM-SB-6760	58.5	22	61
BM-SB-6762	30.5	14	39.5

MOOG	Z	R	V
BM-SB-6804	31	17	40
BM-SB-6855	48	10	46
BM-SB-6856	42	12	46
BM-SB-7210	65	28.5	54.5
BM-SB-7216	33	17	25
BM-SB-7217	-	-	-
BM-SB-7391	160	22	81.3
BM-SB-7392	160	22	81.3
BM-SB-7401	43	14.2	55
BM-SB-7402	43	14.2	50
BM-SB-7406	70.2	12.3	90
BM-SB-7445	46.5	12	48
BM-SB-7885	45	12.1	48
BM-SB-7913	31	12	40
BM-SB-7946	89	19.5	96.5
BM-SB-7948	81.5	19.2	92.5
BM-SB-8046	45.2	12.2	56.7
BM-SB-8108	38.5	12	40
BM-SB-8109	-	16	165
BM-SB-8339	61	12.2	50
BM-SB-8753	65	14.1	53.44
BM-SB-8754	54.21	12.25	53.7
BM-SB-8755	86.4	17	77
BM-SB-8776	41.5	10.3	50
BM-SB-8863	66.3	19	61.3
BM-SB-8864	-	-	-
BM-SB-8981	20.5	8.5	23.5
BM-SB-9571	138	14	60
CH-SB-13391	55	16	80
CH-SB-13392	50	16	70
CH-SB-13395	46	12	51
CH-SB-14074	39	14	60
CH-SB-14092	52.4	16.2	72
CH-SB-2446	60	-	62
CH-SB-2448	37.8	14.5	68
CH-SB-2452	62	24.5	63
CH-SB-2453	62	24.5	63
CH-SB-2456	34	14.2	69
CH-SB-2457	54.1	16.2	62
CI-SB-0224	77	18.8	42
CI-SB-0934	56	18.1	48
CI-SB-0935	56.5	18.2	48
CI-SB-10695	72.3	12.2	82.5
CI-SB-10709	50	18.8	50
CI-SB-10710	50	19.8	50
CI-SB-10711	50	20.8	50
CI-SB-10735	69	24	47
CI-SB-10736	69	25	47
CI-SB-10785	60	12	67
CI-SB-10866	47.9	20.17	39.8
CI-SB-12604	55	18	48
CI-SB-1302	36	12.1	48
CI-SB-1307	59.5	18	45.8
CI-SB-1308	37	12.1	38
CI-SB-1309	59.5	18	45.8
CI-SB-1310	63.5	16.8	42
CI-SB-13348	112	20	42
CI-SB-13496	-	20	46.5
CI-SB-13517	70	97	12
CI-SB-13519	68	16.5	70
CI-SB-13678	-	25	42

MOOG	Z	R	V
CI-SB-13679	-	-	49
CI-SB-13680	-	-	49
CI-SB-13993	43.3	14	59
CI-SB-13994	50.3	14	65
CI-SB-14829	-	16.5	37.5
CI-SB-14915	-	20	56
CI-SB-14916	-	21.5	56
CI-SB-2209	40.3	14.2	38
CI-SB-2210	78	18	42
CI-SB-4058	112	-	93
CI-SB-4059	112	-	93
CI-SB-4459	74	-	37.5
CI-SB-4473	46	12	60
CI-SB-4736	46	20	45
CI-SB-4737	47	20.5	49
CI-SB-4960	33	12	53
CI-SB-4961	57.1	19	62
CI-SB-4962	60	12	85
CI-SB-5125	57	18.5	64.5
CI-SB-5126	74.5	19.4	76
CI-SB-6694	-	22	-
CI-SB-6695	-	23	-
CI-SB-6697	42.5	20	54
CI-SB-6698	42.5	18	54
CI-SB-6776	41	23.5	43
CI-SB-6784	47.6	20.3	43
CI-SB-7141	53	25	52
CI-SB-7317	85	22.9	54
CI-SB-7949	-	22	40
CI-SB-7966	37	16	46.5
CI-SB-8991	82.7	12.1	71.9
CI-SB-8992	67.5	12.6	60.8
CI-SB-8993	74.2	12.2	82.7
DE-SB-10656	32	12	110
DE-SB-10657	28	18.2	54
DE-SB-10821	40.3	14.2	57.5
DE-SB-13953	29	16	40
DE-SB-13996	-	22	50.5
DE-SB-14056	35	17	49
DE-SB-14618	-	10	39.5
DE-SB-4848	44.6	12.2	49.3
DE-SB-4849	53	16	49
DE-SB-5775	39.4	12	59
DE-SB-7239	28	12	47
DE-SB-7240	60	12	46
DE-SB-7241	60	12	54
DE-SB-8905	130	18.3	54
DE-SB-8906	130	18.3	54
DI-SB-10503	40	14.1	70
DI-SB-10504	65	14.1	60
FD-SB-0190	43.5	18.6	46
FD-SB-0191	61.5	-	114
FD-SB-0492	77.4	13	77.7
FD-SB-0497	35.1	12	69
FD-SB-10173	67	21	48
FD-SB-10174	41	19.5	46
FD-SB-10176	-	22	48
FD-SB-10177	40	17	48
FD-SB-10178	41	24	36.2
FD-SB-10674	36	12	35
FD-SB-10690	50	14.2	67

MOOG	Z	R	V
FD-SB-10721	27.5	18	28
FD-SB-10726	50	29	51
FD-SB-12511	38	14.2	65
FD-SB-12512	54	22	73
FD-SB-12518	90.3	20.9	185.6
FD-SB-12519	90.3	20.9	185.6
FD-SB-12523	36.4	12	35
FD-SB-12524	-	22	45
FD-SB-12667	44	14	46
FD-SB-12696	37	12	45
FD-SB-13259	36	20	36
FD-SB-13428	32	12	55
FD-SB-13429	36	12	45
FD-SB-1344	54	12.05	46
FD-SB-1345	46	12.1	45.9
FD-SB-1346	46.7	12.2	45.5
FD-SB-1347	60	12.1	45.9
FD-SB-1348	47.4	12.1	45.6
FD-SB-13487	95	12.5	47
FD-SB-1350	37.5	12	62
FD-SB-1351	66	12	50
FD-SB-13516	38	-	64
FD-SB-1352	124	22	33
FD-SB-1353	40	12.1	64.5
FD-SB-13750	51	22	48
FD-SB-13761	43.5	23	48
FD-SB-13777	37	12	54.5
FD-SB-13778	40	12	45
FD-SB-14048	44	16	46
FD-SB-14079	43	20	46
FD-SB-14762	61.5	32	70
FD-SB-14807	-	31.5	53
FD-SB-14991	60	22	73
FD-SB-15215	36	14	38
FD-SB-15216	35.5	12	40
FD-SB-15324	44.8	14.2	45.7
FD-SB-15341	68.5	24	44
FD-SB-15362	45	14.2	39.5
FD-SB-2263	41	12.3	55
FD-SB-2264	97	22	65
FD-SB-2528	66	16.7	72
FD-SB-2529	37	14	67.5
FD-SB-2530	40.6	14.1	65
FD-SB-3161	39.5	15.5	31
FD-SB-3480	66	16.5	54
FD-SB-3501	52	16.5	54
FD-SB-3659	44.5	20	33
FD-SB-4060	70	12	63
FD-SB-4467	64.5	12.2	70
FD-SB-4507	52.5	16.2	52
FD-SB-4509	41	16	91
FD-SB-5114	60	14.1	60
FD-SB-5115	87.5	22	-
FD-SB-5116	87.5	22	-
FD-SB-5644	124	22	32
FD-SB-5753	54	12.1	45.6
FD-SB-6621	-	20	-
FD-SB-6664	40	15	31
FD-SB-6665	-	13	-
FD-SB-6666	-	18	-
FD-SB-6667	-	20	-

MOOG	Z	R	V
FD-SB-6767	33.5	16.5	31.5
FD-SB-6768	-	16	-
FD-SB-6787	-	26	-
FD-SB-6811	36	18	49
FD-SB-6812	44	17	46
FD-SB-6813	43	22	45
FD-SB-7201	-	19	-
FD-SB-7953	39.5	12.2	45
FD-SB-7973	32	21	41
FD-SB-8091	61	-	51.8
FD-SB-8092	32	12.1	53.4
FD-SB-8115	59.8	12.5	69.8
FD-SB-8467	78.4	12.3	70.75
FD-SB-8964	24.5	12.4	26
FD-SB-8971	60	22	73
FI-SB-10506	37	19.5	36
FI-SB-10509	54	12	52
FI-SB-10510	100	12.38	67
FI-SB-10511	54	12	52
FI-SB-10963	132	22.5	44.5
FI-SB-1323	41.5	17	57
FI-SB-1324	32.5	12	55
FI-SB-13283	47	20	35
FI-SB-13284	38	22	39.5
FI-SB-13285	38	18	39.5
FI-SB-13286	43.6	32	52
FI-SB-13373	42	14	67.5
FI-SB-13488	80	12.2	54
FI-SB-13613	33	12	52
FI-SB-13614	60.6	14	51.5
FI-SB-13672	38	21	51
FI-SB-13721	37	20.5	36
FI-SB-1396	92	20	47.5
FI-SB-14544	31	19	41
FI-SB-14965	69.9	12.5	66
FI-SB-1579	91.5	20.7	47.5
FI-SB-1585	82.5	20.7	31
FI-SB-1586	83	21	30.5
FI-SB-1587	91.5	20.7	47.5
FI-SB-1589	54	18.5	58
FI-SB-1590	54	18.7	53.3
FI-SB-1596	82.5	20.7	31
FI-SB-2207	33.5	12.2	52.5
FI-SB-2208	60.7	14.5	52
FI-SB-2505	30.4	12.2	55
FI-SB-2510	42.4	12.5	67.5
FI-SB-2511	60.2	12.5	65
FI-SB-2514	159	19.1	165
FI-SB-2515	159	19.1	165
FI-SB-2520	76	17	51
FI-SB-2521	76	17	51
FI-SB-2522	159	16	175
FI-SB-2523	159	16	175
FI-SB-3829	60.5	14.5	52
FI-SB-4454	73.5	16	30
FI-SB-4465	25.5	14.2	24.3
FI-SB-4538	29	10.2	44
FI-SB-5160	43.5	14.4	64
FI-SB-5161	60	14.4	51
FI-SB-5203	76	19.7	47
FI-SB-5204	76	19.7	47

MOOG	Z	R	V
FI-SB-5435	42.3	12.2	67.5
FI-SB-5439	72.5	12.3	66
FI-SB-5697	32.8	12.1	52.5
FI-SB-5698	60.7	14.4	52
FI-SB-6622	-	21	-
FI-SB-6623	-	22	-
FI-SB-6624	-	18	-
FI-SB-6626	-	10	-
FI-SB-6627	47	22	41.5
FI-SB-6763	-	24	-
FI-SB-7758	82.5	18.7	31
FI-SB-7759	82.5	18.7	31
FI-SB-8782	45.2	12.1	69.1
FI-SB-8790	100	13.15	68.1
FI-SB-8983	42.4	12.3	67.3
FI-SB-8984	71.5	12.3	66
HO-SB-10436	38.2	12.2	56
HO-SB-10786	42	14	52
HO-SB-10787	-	26	-
HO-SB-10788	-	26	-
HO-SB-10956	31.5	12.5	35
HO-SB-10966	72	22	51
HO-SB-10967	114.75	12	64.7
HO-SB-12669	35	26	46
HO-SB-13258	31.1	10.2	39.8
HO-SB-13430	-	15.5	35
HO-SB-13434	31	10.2	84
HO-SB-13588	51	22	47
HO-SB-13591	40.5	16.5	35
HO-SB-1370	33.9	10.2	40
HO-SB-1371	40.05	12.2	50
HO-SB-14064	80	14	66
HO-SB-14648	45	14	45
HO-SB-14743	40	14	61
HO-SB-15232	67	14.2	63
HO-SB-1858	131.5	40	80
HO-SB-2342	37.05	12.2	50
HO-SB-2540	34.3	10.3	47.5
HO-SB-2541	39	12	71
HO-SB-2542	37.1	14.2	49.8
HO-SB-2552	42.2	14.2	63
HO-SB-2553	65.2	14.2	63
HO-SB-2560	35.2	12.2	56
HO-SB-2561	38.4	10.2	47.4
HO-SB-2573	61.5	18.3	60
HO-SB-3979	35.2	12.2	52
HO-SB-4043	80	22	161
HO-SB-6714	32	21	40
HO-SB-6718	33	25	40
HO-SB-6719	24	15	30
HO-SB-6852	-	24	49
HO-SB-6853	-	13.7	36
HO-SB-7945	36	25	46
HO-SB-8479	40	12.1	49.7
HO-SB-8955	38.3	10.1	53.5
HY-SB-10559	51	18	56
HY-SB-10560	51	18	56
HY-SB-10561	35.2	12.1	56.7
HY-SB-10562	47	24	44
HY-SB-10725	59.85	14.3	66.1
HY-SB-10752	-	14	34

MOOG	Z	R	V
HY-SB-10931	39	15	44
HY-SB-10968	64	10.5	45
HY-SB-12668	40	18	41.5
HY-SB-12670	32.5	22.5	41
HY-SB-12671	29	15	44
HY-SB-12674	41	22.7	48
HY-SB-13299	38	12	55
HY-SB-13300	70	14	60
HY-SB-13367	40	12	54
HY-SB-13703	34.5	20	44.5
HY-SB-13704	70.2	12.2	78.5
HY-SB-13705	66	14	60
HY-SB-13759	36	-	48
HY-SB-13760	36	-	48
HY-SB-13785	42	14	70
HY-SB-13786	70	14	60
HY-SB-14667	42.5	22	43.5
HY-SB-14669	60.2	14.2	54.5
HY-SB-14670	36	17.5	44
HY-SB-14672	41	19	43.5
HY-SB-14674	40	16.5	76
HY-SB-14721	70	14.2	60
HY-SB-14732	-	16.5	44
HY-SB-15267	44	25.5	44
HY-SB-15293	39	13	48
HY-SB-15325	39.8	14.2	60
HY-SB-2635	32.5	12.2	54
HY-SB-2636	63.3	14.5	54.8
HY-SB-5646	32	12.1	53.8
HY-SB-5647	59	14.2	55
HY-SB-7087	66.5	14.2	60
HY-SB-7088	33	12.2	54
HY-SB-7323	52.5	12.3	53.5
HY-SB-8067	42.2	14.3	70
HY-SB-8070	60	14.5	66.25
HY-SB-8895	-	22	44
HY-SB-8957	66.3	14.2	60
JA-SB-13289	45	18.2	40.5
JA-SB-13290	45	19.5	40
JA-SB-8110	51	31	53.5
KI-SB-10150	29	10.25	25
KI-SB-10523	42.1	14.2	69.8
KI-SB-10584	38	12.2	55
KI-SB-10603	47	25.5	48
KI-SB-10607	-	21	44
KI-SB-10619	40	25	48
KI-SB-13277	36.5	10	49.5
KI-SB-13352	31	16	32
KI-SB-13355	40	26	48
KI-SB-5148	33	12.3	54
KI-SB-5149	60.3	12.3	54.5
KI-SB-7097	38	12.5	55
KI-SB-7098	38	12.2	55
KI-SB-7447	54.4	18	69
KI-SB-7448	54.6	-	44.5
KI-SB-8914	47.2	12.2	58.5
KI-SB-8921	45	18.3	56
KI-SB-8922	45	18.3	56
LN-SB-4840	33	12.2	52.5
LN-SB-4864	60.5	14.5	52
LN-SB-6691	-	20	-

MOOG	Z	R	V
LR-SB-12552	50	27	63.5
LR-SB-12553	45	22	63.5
LR-SB-12554	30	21	36.5
LR-SB-12555	44	18	48.5
LR-SB-12556	61.4	24	63.5
LR-SB-12557	61.4	23	58.5
LR-SB-12558	56	16.2	55
LR-SB-12563	43	14	50
LR-SB-13387	50	30.5	63.5
LR-SB-13388	45	22	63.5
LR-SB-13763	66	14	76
LR-SB-13967	46	34	65
LR-SB-13971	41	28.5	63.5
LR-SB-14555	60	14	65
LR-SB-14839	46	34	65
LR-SB-14844	42	10.5	53
LR-SB-14851	100.3	14.2	98
LR-SB-14852	47.1	14.2	74
LR-SB-14855	49.9	14.2	65
LR-SB-14860	47.7	14	62
LR-SB-14863	47	16.2	70
LR-SB-14864	55	10.5	53
LR-SB-14869	47	14	74
LR-SB-14951	52.3	14.2	73.5
LR-SB-5031	45.5	14.2	65
LR-SB-5059	45.1	14	53.5
LR-SB-6577	65.8	20.7	80
LR-SB-6578	49.5	14.2	68
LR-SB-7929	53	16.2	77
LR-SB-7930	53	16.2	77
LR-SB-7931	71	16.2	83
LR-SB-8458	53	16	77
LR-SB-8459	71	16	83
LR-SB-8461	46	16	81
LR-SB-8463	76	14	75
LR-SB-8464	70	16	91
MD-SB-10608	27.1	10.3	49
MD-SB-10651	78.4	16.25	70.5
MD-SB-10661	46	17	50
MD-SB-10662	33	22.5	48
MD-SB-10663	128.5	18.5	70
MD-SB-10664	128.5	18.5	70
MD-SB-10687	36	19	42
MD-SB-12575	44	12.2	49
MD-SB-12578	40	10.3	44.5
MD-SB-13356	-	22	33
MD-SB-13838	39	16	47
MD-SB-13900	41.5	16.2	52.8
MD-SB-13903	126.8	26.8	-
MD-SB-13904	126.8	26.8	-
MD-SB-14651	54	19	40
MD-SB-14653	40	12	44
MD-SB-14654	43	12	55
MD-SB-14655	43	12	44
MD-SB-14656	42.5	15.5	40
MD-SB-14659	46	16.5	40
MD-SB-2363	44.2	12.5	49.5
MD-SB-2364	40.2	12.3	57
MD-SB-2365	62.2	12.3	79.3
MD-SB-4859	29	12.3	60.5
MD-SB-4917	48.5	-	48.6

MOOG	Z	R	V
MD-SB-6720	38	22	60
ME-SB-10138	39.5	20	37
ME-SB-10139	41.5	12	38
ME-SB-10142	91	-	86.5
ME-SB-10143	51.3	12.2	78
ME-SB-10145	100	14.3	93.5
ME-SB-10151	40.3	12	33
ME-SB-10152	40.3	12.8	33
ME-SB-10153	52.4	16	82
ME-SB-10154	50.2	14.2	70
ME-SB-10155	38.7	12.2	37.8
ME-SB-10161	46.16	32	-
ME-SB-10162	32	12.1	80
ME-SB-10163	49	12.2	80
ME-SB-10165	37.5	16	80
ME-SB-10166	80	16.15	50
ME-SB-10498	75	-	80
ME-SB-1209	36.2	12.1	38
ME-SB-12500	70	15	80
ME-SB-12537	46.8	20	75
ME-SB-12539	-	18	30
ME-SB-12547	54	15.5	45
ME-SB-12641	39	13	37
ME-SB-12645	67	18.2	51.1
ME-SB-12646	57.5	-	51
ME-SB-1277	60	14.9	97.2
ME-SB-1294	36.2	11.2	56
ME-SB-13486	101	16.5	47
ME-SB-13542	57	14.2	64.5
ME-SB-1356	50.2	19.9	42.4
ME-SB-1357	50.1	20	48
ME-SB-13580	25	12	28.5
ME-SB-13663	15	39.5	37
ME-SB-13689	33.5	26.5	37.5
ME-SB-13798	45	12	50
ME-SB-13799	27.5	12.2	50
ME-SB-13801	45	12	50
ME-SB-13918	36	18.5	44.5
ME-SB-13941	38.5	20	36.5
ME-SB-13978	46	10	45
ME-SB-14542	50.2	16.2	62
ME-SB-14833	-	30	38.2
ME-SB-14834	156.4	30	31.5
ME-SB-14913	28.5	15.6	31.5
ME-SB-14975	31	17	25
ME-SB-15161	60	14.5	70
ME-SB-1593	60	14.2	87
ME-SB-1594	60.5	13	52.5
ME-SB-1595	40.5	12	70
ME-SB-1631	83	26	71
ME-SB-1645	32	12.2	43
ME-SB-1749	48.2	16.2	48.5
ME-SB-2255	41.2	14.1	75
ME-SB-2256	70.3	14.1	70
ME-SB-2275	26	9	24
ME-SB-2323	48.2	16.2	48.5
ME-SB-2336	43.8	14	80
ME-SB-2730	52	14.2	56
ME-SB-2732	70.2	-	80
ME-SB-2733	70	-	80
ME-SB-2758	60.3	13.4	52.5

MOOG	Z	R	V
ME-SB-2759	45	12	70.5
ME-SB-3650	26	12	26
ME-SB-3714	51.5	10	62
ME-SB-3716	38.5	12	37.9
ME-SB-3996	37.8	12.2	60
ME-SB-3997	49.5	14.2	87
ME-SB-4020	39.2	12	36.85
ME-SB-4186	40.2	12	73
ME-SB-4187	67	10.2	80
ME-SB-4188	70.3	10.2	80
ME-SB-4414	41.5	12	38
ME-SB-4457	62.5	12.9	80
ME-SB-4472	47.2	14.3	30
ME-SB-4476	33.2	12	57.7
ME-SB-4487	66.5	-	57.5
ME-SB-4490	71	35	65.5
ME-SB-4494	47.5	10.1	99.6
ME-SB-4541	67	-	56
ME-SB-5153	36	14	60
ME-SB-5154	60	14	54
ME-SB-5169	40	14	48
ME-SB-5176	51.2	10.3	62
ME-SB-5179	60.3	14.2	80
ME-SB-5182	70.2	14.2	80
ME-SB-5619	51	14.2	75
ME-SB-5620	51	14.2	75
ME-SB-5626	70.3	-	80
ME-SB-5627	70	-	80
ME-SB-5677	53.2	14.5	80
ME-SB-5685	46.3	20	42
ME-SB-5686	60.3	14.6	117
ME-SB-6653	-	23	-
ME-SB-6657	38	26.6	44.4
ME-SB-6658	-	18	-
ME-SB-6742	-	24	-
ME-SB-6819	53.5	24	45
ME-SB-6820	53.5	13.5	45
ME-SB-6825	36.7	22.3	39.9
ME-SB-6826	45	24.5	38
ME-SB-7202	38.5	20	43
ME-SB-7206	65.5	26	46.5
ME-SB-7765	30	24	30
ME-SB-7893	52.5	20	45
ME-SB-7894	52	20	47.2
ME-SB-7898	42	27	46
ME-SB-7901	33.5	22	38.5
ME-SB-7961	92	-	102
ME-SB-7965	66.2	14.4	31.8
ME-SB-7986	65	27	46
ME-SB-8827	77	18	77.5
ME-SB-8829	50	15.1	74
MI-SB-10756	39.5	22	44
MI-SB-10870	50.7	16.5	66
MI-SB-10886	34	26	36
MI-SB-10891	49	27	44
MI-SB-10893	59.5	26	43.5
MI-SB-10969	104	12.25	33
MI-SB-12549	43	25	40
MI-SB-13333	35	20	38.8
MI-SB-13781	-	12	49.5
MI-SB-14632	36	19.5	83.7

MOOG	Z	R	V
MI-SB-14633	36	12	45
MI-SB-14735	44	27	41
MI-SB-3945	56.4	25	105.5
MI-SB-6722	-	17.2	35.2
MI-SB-8113	36.2	12.3	44.6
MI-SB-8114	36.2	19.5	83.7
MI-SB-8434	46	24	54.5
NI-SB-10628	50	14.2	49
NI-SB-10702	44	22.5	33.5
NI-SB-10707	34.5	12.15	52.97
NI-SB-10708	54.2	12.4	45
NI-SB-10841	-	21.5	40
NI-SB-10897	38	20	36
NI-SB-12581	44	18	34
NI-SB-12591	31.5	18	39
NI-SB-13622	42	18	38
NI-SB-13699	68.5	21	34
NI-SB-1372	38	18	50
NI-SB-14049	-	19	40
NI-SB-14559	44.5	12	45
NI-SB-14560	53	19	50
NI-SB-14591	51.5	17	38.5
NI-SB-14767	74	22	24
NI-SB-15132	-	14.2	50
NI-SB-1826	36.2	14.2	60
NI-SB-1948	114.5	24	71
NI-SB-1950	114.5	24	71
NI-SB-2784	116	21	44.5
NI-SB-2786	32.2	14.2	55
NI-SB-2793	35.8	12	55
NI-SB-2794	58.3	12.2	53
NI-SB-2799	38.1	18.1	52.5
NI-SB-2800	136	20.7	54
NI-SB-2807	38.9	14.2	55
NI-SB-3212	42	17.5	48
NI-SB-4692	34	12.6	56
NI-SB-4693	34	12.5	41
NI-SB-6791	30	19	34
NI-SB-8454	43	14.1	54.5
NI-SB-8455	43	14.1	73.5
NI-SB-8909	32.2	-	115
NI-SB-8910	58	12.1	53
OP-SB-0067	38.2	14	35.4
OP-SB-0203	69.5	12.2	67
OP-SB-0443	60.3	12.5	46
OP-SB-10094	64.1	12.65	70.65
OP-SB-10167	30	8.5	20
OP-SB-10168	38.5	14	35
OP-SB-10171	70	12.4	71.6
OP-SB-10445	48.5	25	40
OP-SB-10538	39.3	12	52
OP-SB-10539	42	24.5	38
OP-SB-10540	39.6	14.4	53.7
OP-SB-10570	19.5	22.5	57
OP-SB-10666	-	14.1	-
OP-SB-10673	-	14.1	-
OP-SB-10793	35	19	38
OP-SB-10794	42	26	38
OP-SB-10842	67	12	90
OP-SB-10964	144	10.25	50
OP-SB-10965	144	10.25	50

MOOG	Z	R	V
OP-SB-13282	67	12	100
OP-SB-13378	35	12	52
OP-SB-13451	70	17	30
OP-SB-13630	35	25	39
OP-SB-13644	44	20	31
OP-SB-1375	39	14.1	59
OP-SB-1376	39	12	60
OP-SB-1377	60	16.2	58
OP-SB-1378	38	10.3	52
OP-SB-1380	58	14.2	56
OP-SB-1382	48.5	14.2	45.6
OP-SB-1383	47.3	12.2	60
OP-SB-1384	36	12	60
OP-SB-1385	47.3	12	60
OP-SB-1386	28	10	52
OP-SB-13923	34.5	22	41.5
OP-SB-14711	37.3	12	68.5
OP-SB-14712	64	12	70
OP-SB-1624	59	12.2	74.5
OP-SB-1644	61.5	19	53
OP-SB-2812	70	19.2	61
OP-SB-2824	46.5	12.1	59.6
OP-SB-3621	45.15	12	52
OP-SB-3770	60	12.2	90.4
OP-SB-3779	49.5	12.1	71
OP-SB-3811	53	10	65
OP-SB-3813	43.5	12.1	71
OP-SB-3816	60	13.5	55
OP-SB-3818	55	18.5	49.5
OP-SB-3822	38.8	23	4.6
OP-SB-3823	38	22	40
OP-SB-4068	48	12.2	75
OP-SB-4069	45.3	12.2	52
OP-SB-4083	80	14	59.5
OP-SB-4088	64.5	14	60
OP-SB-4089	32	16	38
OP-SB-4090	30	16.5	37
OP-SB-4094	34.5	14.5	37
OP-SB-4451	97	-	79.5
OP-SB-4456	35.2	12.1	89
OP-SB-4511	28	14.2	28.5
OP-SB-4545	37.2	14.2	40
OP-SB-6642	-	17.5	-
OP-SB-6676	31	21	39
OP-SB-6680	34	19	39
OP-SB-6681	30.5	16	39.5
OP-SB-6734	-	23	-
OP-SB-6806	31.5	16	39
OP-SB-6808	32	17	40
OP-SB-6809	32	15	40
OP-SB-6810	32.5	19	40
OP-SB-6846	32	17	38
OP-SB-6992	70	12.5	65
OP-SB-7215	47	25	50
OP-SB-7416	-	16.2	30
OP-SB-7934	41	20	40
OP-SB-7935	30	18	38
OP-SB-7957	60	16.2	58
OP-SB-7968	23.5	13	28
OP-SB-8083	39.5	23	38.5
OP-SB-8420	40.4	12.1	59.7

MOOG	Z	R	V
OP-SB-8742	69.3	13.3	90
OP-SB-8744	57.6	14.1	36
OP-SB-8745	59	10.1	65
OP-SB-8748	86	22	60
OP-SB-8779	38.2	14.1	60
OP-SB-8780	64	19.4	54.5
OP-SB-8962	35	21	39.5
OP-SB-8963	35	22	39.5
OP-SB-8982	30	12	24
OP-SB-8986	80.5	22.4	60
PE-SB-0225	55.3	14.2	56
PE-SB-0998	45.3	14.2	56.8
PE-SB-10108	65	17.2	48.6
PE-SB-10110	60.9	16.9	48.2
PE-SB-10500	-	-	-
PE-SB-10717	59	15.25	74.8
PE-SB-10738	47.9	20	38
PE-SB-10741	47.9	21	38
PE-SB-10743	34.2	12.2	45
PE-SB-10744	60	12.06	40.1
PE-SB-10745	44.85	12.3	36.25
PE-SB-10852	50	22	37.5
PE-SB-10925	111	10	43
PE-SB-10926	111	11	44
PE-SB-10927	111	10	43
PE-SB-1137	120	34	35.5
PE-SB-1138	47	19	55
PE-SB-12590	-	23	38
PE-SB-1295	50	21	60
PE-SB-1301	63.8	16.7	55
PE-SB-1303	33.2	12	30.9
PE-SB-1304	75	18.8	38
PE-SB-1310	34	12	48
PE-SB-1311	96	-	-
PE-SB-1312	82	23	53.5
PE-SB-1313	93	23	73.5
PE-SB-1314	28	10.1	34
PE-SB-1315	36	12	25
PE-SB-1316	51	18	45
PE-SB-1317	33	12.1	38
PE-SB-1318	83.2	20	30
PE-SB-1319	37.15	14	38
PE-SB-1320	55.4	14.2	48.8
PE-SB-13457	111.7	19.85	41.5
PE-SB-13632	39	20	50.5
PE-SB-13633	39.5	19	50.5
PE-SB-13682	-	-	49
PE-SB-13683	-	-	50
PE-SB-14764	-	20.5	55
PE-SB-1632	50	22	60
PE-SB-2229	55	14	65
PE-SB-2344	55.2	14	50.2
PE-SB-2826	54	14.1	27.5
PE-SB-3218	50	20	60
PE-SB-3492	56.2	14.2	50
PE-SB-3513	88	20	33.5
PE-SB-3866	45	14	57
PE-SB-3947	55.3	14	50.2
PE-SB-4516	27.2	12.2	40.5
PE-SB-4528	30	13	34
PE-SB-4532	40.3	12.1	27.5

MOOG	Z	R	V
PE-SB-4546	33.4	12.3	47
PE-SB-4743	56.5	14.2	48
PE-SB-4744	56.5	14.2	48
PE-SB-4963	55.5	14.2	50
PE-SB-6649	-	22	55
PE-SB-6650	32.3	23	55
PE-SB-6703	45	22	50.5
PE-SB-6704	50.2	23.4	47
PE-SB-6729	-	19	-
PE-SB-6730	72	20	-
PE-SB-6750	39.5	17	50.5
PE-SB-6773	51	17	45
PE-SB-6774	45	18	45
PE-SB-6777	45	16	45
PE-SB-6778	-	16	-
PE-SB-6779	47	18	51
PE-SB-6780	50.3	21	50
PE-SB-6781	50.1	22.1	50
PE-SB-6782	-	21	-
PE-SB-6783	-	21.5	40
PE-SB-7417	51	-	81
PE-SB-7429	37	14.2	59.5
PE-SB-7430	60	14.1	54
PE-SB-7772	33	20	55
PE-SB-7962	32	12	60
PE-SB-7963	60.05	12.3	32.25
PE-SB-8468	33	12.2	82
PE-SB-8469	31.6	10.2	34
PE-SB-8472	111.2	20	45.5
PE-SB-8484	85	22.7	54
PE-SB-8839	78.5	14.3	79
PE-SB-8840	46.5	12.1	27.5
RE-SB-0296	36	22	43
RE-SB-0540	54.5	19	-
RE-SB-10172	72	32	73
RE-SB-10477	37.1	14.1	45
RE-SB-10481	34.8	18.5	36
RE-SB-10541	35	23	42
RE-SB-10542	41	24.5	41.5
RE-SB-10801	80.2	13	70.2
RE-SB-10802	69.5	12	90
RE-SB-10803	69.5	12	89
RE-SB-10843	37	20	46.5
RE-SB-10929	55.5	19	37
RE-SB-1166	35	20	42
RE-SB-1167	15.6	8	80
RE-SB-12644	40	25	38
RE-SB-13315	43.4	19	68
RE-SB-1332	32	14	46
RE-SB-1333	32.2	12	46
RE-SB-1334	45	12.1	46
RE-SB-1335	40	12	46
RE-SB-1336	40	12.1	46
RE-SB-1337	38	12	46
RE-SB-1338	36	12	46
RE-SB-1339	58.2	12.1	53.5
RE-SB-1340	55	18	55
RE-SB-1341	58	12.5	50
RE-SB-1342	55	18.2	46
RE-SB-1343	45.3	12	46
RE-SB-13481	41	17	81.6

MOOG	Z	R	V
RE-SB-13600	37	12	46
RE-SB-13812	54	17	79
RE-SB-13831	58	14	65
RE-SB-14598	34	14	40
RE-SB-15261	67	22	38
RE-SB-15328	69.8	14.5	65
RE-SB-1694	-	22	-
RE-SB-1719	34	20	63
RE-SB-2199	34	24	93
RE-SB-2211	35.5	22.5	42
RE-SB-2238	41	23	-
RE-SB-2830	55	18.2	50
RE-SB-2834	47	20	42
RE-SB-2835	33	18	60
RE-SB-2836	58	15	54
RE-SB-3746	37	12	46
RE-SB-3758	35	23.5	-
RE-SB-3820	33.2	12.2	48
RE-SB-3821	58	12.2	53
RE-SB-3845	55.2	28	79
RE-SB-3846	55.2	28	74
RE-SB-4095	78	-	73.25
RE-SB-4108	78	12.5	73.25
RE-SB-4191	67	12	90
RE-SB-4713	58.2	12.3	55
RE-SB-6670	-	22	-
RE-SB-6672	-	16	-
RE-SB-6847	28.5	20	63.5
RE-SB-6849	39.5	18	62.5
RE-SB-6850	30	19	40
RE-SB-7205	40	16	31
RE-SB-7354	40	16	70
RE-SB-7433	32.2	12	48
RE-SB-7434	57.8	12	53
RE-SB-7975	45.3	10.5	73
RE-SB-8013	55	18.2	50.5
RE-SB-8017	58	14.1	65
RE-SB-8332	55	18.4	50.5
RE-SB-8333	58	14.3	65
RE-SB-9030	70	12.3	90
RO-SB-12584	45	23	34
RO-SB-12585	30	18	36.5
RO-SB-2840	32	10.2	50
RO-SB-2841	41.5	12.2	53
RO-SB-2842	32	12.2	57
RO-SB-4251	91	10.2	40.5
RO-SB-5737	78.5	-	-
RO-SB-5738	78.5	-	-
SA-SB-10551	58.3	12.3	58
SA-SB-13376	50.4	16	56.5
SA-SB-6661	-	18	-
SE-SB-0100	32.5	12.2	54
SE-SB-0104	64	18.6	52
SK-SB-14592	30.5	11	35
SK-SB-2852	99	18	22.5
SK-SB-4031	32	12.1	61
SK-SB-4034	99	18	22.5
SU-SB-14671	-	18.5	40
SU-SB-14935	145	31.5	28
SU-SB-14936	145	31.5	28
SZ-SB-0458	58.5	18.5	48

MOOG	Z	R	V
SZ-SB-2960	27.5	10.2	52
SZ-SB-5085	42.5	14.5	64
SZ-SB-5086	60.2	14.2	51
SZ-SB-6726	28.4	17.4	-
SZ-SB-7351	65.3	14.3	60
TO-SB-10097	31	15	36
TO-SB-10127	51.5	23	58.5
TO-SB-10128	34.5	14.2	52.7
TO-SB-10129	60	21.1	62.1
TO-SB-10548	56	14.6	89
TO-SB-10620	46.2	15	61.8
TO-SB-10696	-	-	-
TO-SB-10932	-	19	37.5
TO-SB-10973	120	14	57
TO-SB-10975	120	14	57
TO-SB-13265	-	29	48
TO-SB-13711	55	12.2	80
TO-SB-13791	31.5	22	39.5
TO-SB-13851	51	21	59
TO-SB-13852	47	15	59
TO-SB-13910	6	16.4	59.5
TO-SB-13916	40	16.2	65.5
TO-SB-13917	69	16.2	59.6
TO-SB-13969	47	22	59.5
TO-SB-13970	47	22	59.5
TO-SB-14047	33.5	21	40
TO-SB-14052	51.5	23	58.5
TO-SB-14952	26	18	28.6
TO-SB-1938	65	20	70
TO-SB-1939	52.5	20.2	61
TO-SB-2961	35	14.3	59.5
TO-SB-2966	68.2	14.6	60
TO-SB-4993	51.8	14.2	66
TO-SB-4994	48	18.1	84
TO-SB-4995	48.3	18.1	90
TO-SB-5137	35.15	14.3	59.5
TO-SB-6586	41	16	65.5
TO-SB-6587	68	16	60
TO-SB-7257	38.8	14.1	59.5
TO-SB-7258	60	22.5	54
TO-SB-7380	122	34	36
VO-RK-4858	40	10	43
VO-SB-0042	72.5	12.1	90
VO-SB-0428	48.5	12.3	53
VO-SB-0430	108	18	50
VO-SB-10130	55.6	16.3	51.45
VO-SB-10131	71.5	12.2	59.8
VO-SB-10149	26	10.1	32
VO-SB-10179	44	12.2	50
VO-SB-10550	34.5	22	52
VO-SB-10574	63.9	12.2	60.25
VO-SB-10877	38.5	21	44
VO-SB-10878	38.5	23	44
VO-SB-10957	72.5	12	39
VO-SB-10977	110	10	65
VO-SB-1189	72.5	12.2	90
VO-SB-1195	61	18.2	50
VO-SB-1212	35	14.2	60
VO-SB-12647	72	14.2	60
VO-SB-13288	37	26.5	43.5
VO-SB-1329	32.5	12	54

MOOG	Z	R	V
VO-SB-13463	34	23	35
VO-SB-13464	37	22.5	28.5
VO-SB-13466	40	10	47
VO-SB-13484	44	12.2	46
VO-SB-13485	44	12.8	50
VO-SB-13502	80.65	19	74
VO-SB-13505	36.5	12	50
VO-SB-13506	36	12	30
VO-SB-1358	60	17	41
VO-SB-13583	48.5	24	51
VO-SB-1362	46.4	10.1	40
VO-SB-1363	62.9	12	55
VO-SB-13631	40	16	30
VO-SB-1364	65	12	80
VO-SB-1365	50.3	12.2	60
VO-SB-13656	65	13	50
VO-SB-1366	40.2	12.2	50
VO-SB-1367	27.5	10	47
VO-SB-1368	60	17	46
VO-SB-1369	60	13	41
VO-SB-13717	60	14	75
VO-SB-13719	60	14	64
VO-SB-13731	-	27	52
VO-SB-13734	40.5	14	60
VO-SB-13735	62.2	14	64
VO-SB-13736	46.5	14	84
VO-SB-13737	40.5	10	60
VO-SB-13743	40	12	54
VO-SB-13843	-	13	40
VO-SB-14577	41	12	60
VO-SB-14578	41	12	45
VO-SB-14628	29	14.5	23
VO-SB-14676	-	17.5	30
VO-SB-14966	36	11	30
VO-SB-15105	26.2	10.1	35
VO-SB-2318	40	14.1	60
VO-SB-2319	60	14.1	64
VO-SB-2320	35	20.5	52.5
VO-SB-2337	108	21	50
VO-SB-3073	41.8	14.1	74
VO-SB-4169	56	12	90
VO-SB-4445	56.5	12.2	50
VO-SB-4482	58	10.2	58
VO-SB-4523	51	19.22	30.9
VO-SB-4857	69.5	13	89.5
VO-SB-4861	129.4	14.3	56.6
VO-SB-4930	60.2	12.2	64
VO-SB-5010	62	19	50
VO-SB-5623	40	14.2	59.8
VO-SB-5624	60.3	14.2	60
VO-SB-6725	34	16.5	32
VO-SB-6748	-	25	-
VO-SB-6749	46.5	27	44
VO-SB-6788	-	19	-
VO-SB-6796	36	21	25
VO-SB-6814	-	20	-
VO-SB-6815	34	20	28.5
VO-SB-6818	36.5	17	25.5
VO-SB-7147	-	18	-
VO-SB-7161	30	20	35
VO-SB-7171	-	40	-

MOOG	Z	R	V
VO-SB-7199	-	20.5	-
VO-SB-7418	17.2	15.8	50
VO-SB-7419	-	18	35
VO-SB-7422	33	20	33.5
VO-SB-7880	37.8	12.1	49.8
VO-SB-7892	44	19	50
VO-SB-7895	-	17	35
VO-SB-7896	-	16	35
VO-SB-7914	40	12	60
VO-SB-7916	42	12	60
VO-SB-7958	39	12.5	15.2
VO-SB-7978	71.75	10.2	79.7
VO-SB-8444	39.87	17.8	-
VO-SB-8447	70	18	88
VO-SB-8448	70	18	92
VO-SB-8810	79.7	20.6	97.2
VO-SB-8811	-	-	-
VO-SB-8812	39	14	45
VV-SB-0423	53.2	14.2	50
VV-SB-0424	48.5	24	99
VV-SB-10720	42	17	36
VV-SB-13273	36.5	20	33.5
VV-SB-13375	38.5	12	59.6
VV-SB-13377	54	14.2	50
VV-SB-13507	71.6	25.5	55.6
VV-SB-13509	65	-	-
VV-SB-13510	61	22	52
VV-SB-13513	61.3	23.5	71.9
VV-SB-13514	74	25.5	55
VV-SB-13845	44	20.5	48.5
VV-SB-13887	74	18.6	81.5
VV-SB-13888	74	18.6	81.5
VV-SB-13954	28	13	41.5
VV-SB-13955	28	16	41.5
VV-SB-15121	-	12.3	35
VV-SB-2321	32	12.1	45.8
VV-SB-2351	47	14.1	67.5
VV-SB-2352	31.7	17.8	27.2
VV-SB-3086	32	-	95
VV-SB-3630	116	20.5	54.5
VV-SB-3632	116	20.5	54.5
VV-SB-3633	37.5	12	60
VV-SB-3647	40.3	14.2	64.6
VV-SB-3648	60	22	65
VV-SB-4415	53.5	14.6	50
VV-SB-4416	58.5	-	99
VV-SB-4519	37.5	18.1	26.5
VV-SB-4529	40.2	20	40
VV-SB-4530	40.2	20	40
VV-SB-7208	48.35	20.25	42.35
VV-SB-7234	-	12.3	88
VV-SB-7235	-	12.3	88
VV-SB-7954	72.2	12.3	45.3
VV-SB-7955	36	12	-

ALFA ROMEO	MOOG
00060501394	AL-SB-1288
0009945565	AL-AX-1647
0060588845	AL-WP-1612
0060588846	AL-WP-1621
0060630757	AL-LS-1754
05960254	FI-SB-9666
07520850	FI-SB-8793
07775940	FI-SB-9678
102962	K150003
1497407080	CI-TC-7299
1497408080	CI-TC-7298
1603456	OP-AX-4160
1603543	OP-AX-4160
1609456	OP-AX-4160
164002101900	FI-BJ-3157
164002103800	AL-WP-1621
164002103801	FI-WP-4686
164002103900	AL-WP-1612
164002103901	FI-WP-4685
164002302801	AL-AX-1647
164102101900	AL-BJ-7521
193583600001	AL-ES-0034
193583600002	AL-ES-0034
35066 (-)	AL-SB-0503
35067 (-)	AL-SB-0527
352067	OP-BJ-4870
352087	OP-BJ-4870
352095	FI-WP-0109
352096	FI-WP-0111
3520C5	FI-TC-8871
3520N3	FI-WP-3840
352164	FI-TC-8872
352165	FI-WP-0108
352166	FI-WP-0110
3521J3	FI-WP-0118
352380	FI-SB-5435
36020064	K150071
36020065	K150071
36020066	K150071
36020066	K150137
36020076	K150100
36025748	AL-ES-0050
36025749	AL-ES-0051
364017	FI-BJ-4077
364032	FI-BJ-7530
364033	FI-BJ-7531
364054	FI-BJ-0513
364055	FI-BJ-0512
364067	FI-BJ-4958
400624	FI-AX-7528
4018H4	FI-ES-7529
4097451	FI-BJ-0262
4102138	FI-ES-0248
4150178	FI-BJ-3116
4219839	FI-AX-3113
4226335	FI-TC-0255

...ALFA ROMEO	MOOG
4242581	FI-ES-0254
4254519	FI-ES-0252
4264175	FI-ES-3121
4322913	FI-AX-3105
4331968	FI-SB-3171
4332457	FI-TC-0253
4343760	FI-ES-0260
4343762	FI-ES-0261
4402277	FI-ES-3119
4402360	FI-TC-4063
4402672	FI-TC-4674
4553505010	K150173
46402825	AL-SB-10834
46409095	FI-WP-0948
46409096	FI-WP-0947
46413122	FI-LS-0048
46414183	FI-SB-9693
46414184	FI-SB-9694
46414734	LN-WP-4405
46414735	LN-WP-4406
46420429	FI-ES-2507
46420430	FI-ES-2508
46421522	FI-SB-2505
46423823	FI-WP-7503
46423824	AL-TC-8867
46423824	AL-WP-7527
46423825	AL-TC-8868
46423825	AL-WP-7526
46429834	FI-TC-6564
46429835	FI-TC-6565
46430002	FI-WP-7525
46430003	FI-WP-7524
46437959	FI-BJ-0049
46452741	AL-SB-9692
46454595	FI-WP-2519
46454595 (-)	FI-SB-2520
46454595 (-)	FI-SB-2521
46454596	FI-WP-2509
46454596 (-)	FI-SB-2520
46454596 (-)	FI-SB-2521
46454597	FI-WP-0239
46454597 (-)	FI-SB-2522
46454597 (-)	FI-SB-2523
46454598	FI-WP-0240
46454598 (-)	FI-SB-2522
46454598 (-)	FI-SB-2523
46459719	FI-WP-0948
46459720	FI-WP-0947
46459723	FI-RK-3827
46462049	LN-LS-2678
46474556	AL-TC-8867
46474556	AL-TC-8868
46474556	AL-WP-7526
46474556	AL-WP-7527
46474557	AL-TC-8868
46474557	AL-WP-7526

...ALFA ROMEO	MOOG
46476755	FI-SB-4454
46519894	FI-WP-0948
46519898	FI-WP-0947
46522142	FI-WP-1462
46525407	FI-WP-1463
46543045	FI-BJ-0936
46545660	FI-WP-0461
46545660 (-)	FI-SB-2207
46545661	FI-WP-0462
46545661 (-)	FI-SB-2208
46545749	LN-LS-13578
46555183	AL-SB-6628
46736463 (-)	LN-SB-6691
46741920	FI-SB-10509
46745364	FI-ES-0242
46745365	FI-ES-0241
46748578	FI-SB-2514
46748579	FI-SB-2515
46764746 (-)	FI-SB-7758
46764746 (-)	FI-SB-7759
46764747 (-)	FI-SB-7758
46764747 (-)	FI-SB-7759
46767262	FI-SB-14544
46767267	FI-LS-2111
46779293	FI-BJ-4174
46802682	AL-TC-3624
46841498	AL-LS-0052
46843389	AL-LS-0052
4883079J00	FI-AX-10883
4883079J10	FI-AX-5156
50006262	FI-ES-0446
50509339	AL-TC-0057
50509339	AL-TC-8080
50509339S1	AL-SB-1720
50509340	AL-TC-0056
50509340	AL-TC-8079
50510134	FI-SB-13488
50511650	FI-WP-3958
50513442	AL-WP-10780
50513442 (-)	AL-BJ-10774
50513442 (-)	AL-SB-10777
50513442 (-)	AL-SB-10778
50513444	AL-WP-10779
50513444 (-)	AL-BJ-10774
50513444 (-)	AL-SB-10777
50513444 (-)	AL-SB-10778
50515274	AL-LS-10443
50515275	AL-LS-10444
50515276	FI-LS-4548
50519427 (-)	AL-AX-10998
50520352	AL-ES-10781
50520353	AL-ES-10782
50521045	AL-WP-10780
50521046	AL-WP-10779
50521707	FI-SB-13488
50531823	FI-LS-4548

...ALFA ROMEO	MOOG
50700443	FI-SB-2510
50700464	FI-LS-2371
50700778	FI-SB-2511
50700779	FI-TC-8874
50700779	FI-WP-0938
50700797	FI-TC-8873
50700797	FI-WP-0939
50701178	FI-SB-10506
50701813	LN-LS-13578
50703128	FI-TC-1964
50703128 (-)	FI-SB-3829
50703129	FI-TC-1963
50703129 (-)	FI-SB-3829
50703231	LN-TC-4835
50703231 (-)	LN-SB-4840
50703231 (-)	LN-SB-4864
50703232	LN-TC-4800
50703232 (-)	LN-SB-4840
50703232 (-)	LN-SB-4864
50703271	FI-SB-10511
50703296	FI-LS-3830
50704306	AL-TC-5099
50704306 (-)	AL-SB-5103
50704306 (-)	AL-SB-5106
50704307	AL-TC-5100
50704307 (-)	AL-SB-5103
50704307 (-)	AL-SB-5106
50704361	AL-LS-5094
50704362	AL-LS-5093
50704680	AL-LS-5095
50704947	AL-TC-5097
50704947	AL-TC-8105
50704947 (-)	AL-SB-5101
50704947 (-)	AL-SB-5102
50704948	AL-TC-5098
50704948	AL-TC-8104
50704948 (-)	AL-SB-5101
50704948 (-)	AL-SB-5102
50705083	FI-TC-9057
50705083	FI-WP-5692
50705084	FI-TC-9058
50705084	FI-WP-5693
50705311	AL-LS-5095
50705464	FI-WP-7420
50705464 (-)	FI-BJ-5414
50705465	FI-WP-7421
50705465 (-)	FI-BJ-5414
50705702	AL-LS-5095
50705944	FI-SB-13721
50706004	AL-LS-5095
50706595	AL-LS-5096
50706598	AL-LS-5096
50706858	AL-TC-5099
50706859	AL-TC-5100
50706954	AL-SB-5104
50706955	AL-SB-5105

...ALFA ROMEO	MOOG
50706990	AL-LS-5094
50706991	AL-LS-5093
50707029	AL-TC-5099
50707030	AL-TC-5100
50707316	AL-TC-5099
50707317	AL-TC-5100
50707480	AL-TC-5098
50707480	AL-TC-8104
50707481	AL-TC-5097
50707481	AL-TC-8105
50708721	AL-SB-5104
50708722	AL-SB-5105
50708823	FI-TC-7412
50708823 (-)	FI-SB-5697
50708823 (-)	FI-SB-5698
50708824	FI-TC-7413
50708824 (-)	FI-SB-5697
50708824 (-)	FI-SB-5698
50709579	FI-TC-7412
50709580	FI-TC-7413
50710620	FI-TC-7413
50710621	FI-TC-7412
510615	AL-ES-0034
510986	AL-ES-0034
51717001	FI-LS-8783
51727863	FI-WP-5202
51727863 (-)	FI-SB-5204
51727865	FI-WP-5201
51727865 (-)	FI-SB-5203
51749713	AL-TC-3623
51754198	AL-SB-6687
51776326	AL-TC-10670
51776327	AL-TC-10669
51777717	AL-TC-7983
51777718	AL-TC-7984
51783056	FI-WP-3958
51783057	FI-WP-3959
51783623	FI-SB-8790
51787336	AL-TC-5098
51787336	AL-TC-8104
51787337	AL-TC-5097
51787337	AL-TC-8105
51795446	AL-TC-5100
51795447	AL-TC-5099
51795454	AL-LS-5094
51795455	AL-LS-5093
51795703	AL-LS-5095
51795704	AL-LS-5096
51795705	AL-LS-5095
51795706	AL-LS-5096
51796664	FI-SB-10511
51805471	AL-TC-5099
51805472	AL-TC-5100
51805870	FI-LS-4548
51810124	FI-LS-10828
51810664	FI-WP-8476

...ALFA ROMEO	MOOG
51810664 (-)	FI-BJ-8357
51810664 (-)	FI-SB-8983
51810664 (-)	FI-SB-8984
51810665	FI-WP-8475
51810665 (-)	FI-BJ-8357
51810665 (-)	FI-SB-8983
51810665 (-)	FI-SB-8984
51817623	AL-TC-5097
51817623	AL-TC-8105
51817624	AL-TC-5098
51817624	AL-TC-8104
51828660	AL-TC-8104
51828661	AL-TC-8105
51834093	AL-TC-10669
51834094	AL-TC-10670
51835397	AL-TC-8105
51835398	AL-TC-8104
51840600	FI-SB-8781
51842924	AL-TC-5100
51842925	AL-TC-5099
51848645	FI-LS-8086
51856870	FI-SB-13721
51856959	FI-LS-8794
51857021	FI-TC-7412
51857022	FI-TC-7413
51875887	FI-AX-5694
51892272	FI-WP-3959
51892273	FI-WP-3958
51895366	FI-WP-3958
51895367	FI-WP-3959
542920	AL-BJ-3931
542921	AL-BJ-3931
545068	AL-BJ-3931
545069	AL-BJ-3931
545088	AL-BJ-3931
545089	AL-BJ-3931
55700695	FI-SB-10510
55700751	FI-SB-5439
55700753	FI-LS-4548
55703232	FI-SB-5435
55703627	FI-WP-3958
55703629	FI-WP-3959
5939683	FI-WP-4671
5939685	FI-WP-4672
5958244	FI-AX-3120
5958246	FI-ES-4079
5960036	FI-ES-4082
5960321	FI-AX-4080
5960834	FI-ES-4085
5962654	FI-ES-4084
5966980	LN-ES-3159
5995503	FI-TC-4673
60501394	AL-SB-1288
60501398	AL-BJ-3931
60501539	AL-ES-0034
60501540	AL-ES-0034

...ALFA ROMEO	MOOG
60502781	K150003
60506725	K150099
60507910	AL-AX-1647
60507918	FI-ES-3156
60510360	AL-BJ-7521
60510361	AL-SB-1293
60510362	AL-WP-1621
60510363	AL-WP-1612
60511622	FI-AX-1856
60511622	FI-ES-3156
60535946	AL-ES-0034
60536914	AL-BJ-3931
60556032	FI-BJ-3157
60565705	FI-ES-4676
60565706	FI-ES-4675
60566661	FI-BJ-3157
60570365	AL-LS-1619
60570627	FI-LS-0441
60570731	AL-SB-9688
60570732	AL-SB-9686
60586771	AL-TC-8867
60586771	AL-TC-8868
60586771	AL-WP-7526
60586771	AL-WP-7527
60586772	AL-TC-8868
60586772	AL-WP-7526
60608979	AL-ES-0265
60608980	AL-DS-7511
60608980	AL-ES-7513
60612294	FI-BJ-7517
60612317	FI-BJ-7517
60612435	AL-LS-0263
60612435	AL-LS-0266
60612436	AL-LS-0263
60612436	AL-LS-0266
60613575	AL-LS-7542
60614514	AL-LS-0043
60620565	AL-SB-0500
60620565	AL-SB-7338
60620566	AL-SB-0499
60620566	AL-SB-7339
60622623	AL-TC-7983
60622624	AL-TC-7984
60625029	AL-LS-0052
60627290	AL-SB-2398
60627290	AL-TC-8865
60627290	AL-WP-1437
60627291	AL-TC-8866
60627291	AL-WP-1436
60628255	AL-LS-3296
60628255	AL-LS-3297
60628284	AL-LS-3296
60628284	AL-LS-3297
60628294	AL-LS-7410
60628295	AL-LS-7411
60628303	AL-WP-2394

...ALFA ROMEO	MOOG
60628303 (-)	AL-SB-2402
60628307	AL-WP-2395
60628307 (-)	AL-SB-2402
60629903	AL-TC-3624
60630757	AL-LS-1754
60642465	AL-TC-0056
60642465	AL-TC-8079
60651934	AL-TC-7984
60651935	AL-TC-7983
60651939	AL-TC-10669
60651940	AL-TC-10670
60652167	AL-TC-3623
60652465	AL-SB-0501
60652465	AL-TC-0056
60652465	AL-TC-8079
60652466	AL-SB-0502
60652466	AL-SB-7340
60652466	AL-TC-0057
60652466	AL-TC-8080
60653551	AL-TC-10671
60653552	AL-TC-10671
60653552	AL-TC-10672
60657245	AL-TC-10669
606572456 (-)	AL-SB-1721
60657246	AL-TC-10670
60665804	AL-TC-8865
60665804	AL-WP-1437
60665805	AL-TC-8866
60665805	AL-WP-1436
60666020	AL-TC-10672
60666021	AL-SB-2399
60666021	AL-SB-6688
60666021	AL-TC-10671
60678134	AL-TC-0056
60678134	AL-TC-8079
60678135	AL-TC-0057
60678135	AL-TC-8080
60682636	AL-SB-10834
60686891	AL-TC-0056
60686891	AL-TC-8079
60686891 (-)	AL-SB-7341
60686892	AL-TC-0057
60686892	AL-TC-8080
60686892 (-)	AL-SB-7341
60695895	AL-SB-2396
60695895	AL-SB-2397
60695895	AL-TC-8865
60695895	AL-WP-1437
60695895S1	AL-SB-2396
60695895S3	AL-SB-2397
60695896	AL-TC-8866
60695896	AL-WP-1436
60699021	AL-LS-7542
607060026	K150026
60709447	K150003
60710237	AL-DS-7512

...ALFA ROMEO MOOG

60801425	FI-BJ-3157
60801528	FI-WP-4685
60801528 (-)	FI-BJ-3157
60801529	FI-WP-4686
60806398	AL-SB-9686
60806398	FI-SB-9693
60806408	AL-SB-1233
60807583	FI-LS-0441
60808557	AL-SB-2391
60808557	FI-SB-6627
60809752	FI-SB-9693
60809753	FI-SB-9694
60809813	AL-TC-8867
60809813	AL-TC-8868
60809813	AL-WP-7526
60809813	AL-WP-7527
60809814	AL-TC-8868
60809814	AL-WP-7526
60811372	FI-SB-9693
60811373	FI-SB-9694
60812796	AL-TC-8867
60812796	AL-WP-7527
60812797	AL-TC-8868
60812797	AL-WP-7526
60813013	AL-TC-8867
60813013	AL-TC-8868
60813013	AL-WP-7526
60813013	AL-WP-7527
60813014	AL-TC-8868
60813014	AL-WP-7526
60813043	AL-TC-8867
60813043	AL-TC-8868
60813043	AL-WP-7526
60813043	AL-WP-7527
60813044	AL-TC-8868
60813044	AL-WP-7526
60815431	FI-WP-0947
60815432	FI-WP-0948
60922803	RE-SB-10801
6407373	FI-WP-7501
68141058AA	FI-ES-10933
7076231	FI-AX-3853
7077206	FI-AX-4868
7079382	FI-AX-1751
7079388	FI-AX-2518
7081842	FI-AX-4197
7081851	FI-AX-4198
71738285	FI-WP-7504
71742688	FI-LS-5159
71742731	FI-WP-5158
71742731 (-)	FI-SB-5161
71742732	FI-WP-5157
71742732 (-)	FI-SB-5161
71742733	FI-SB-5160
71742770	FI-ES-5155
71746512	AL-TC-5097

...ALFA ROMEO MOOG

71746513	AL-TC-5098
71746513	AL-TC-8104
71749327	AL-TC-5099
71749328	AL-TC-5100
7536271	FI-TC-1620
7543028	FI-ES-0444
7543760	FI-TC-4666
7544738	FI-SB-4465
7591215	FI-ES-4676
7591216	FI-ES-4675
7592476	LN-SB-6684
7601057	FI-WP-7502
7601064	FI-SB-1585
7601064	FI-SB-1596
7601065	FI-SB-1587
7601068	FI-SB-1579
7601502	AL-SB-9686
7601502	FI-SB-9693
7601502	FI-SB-9694
7601642	AL-SB-1233
7601646	FI-SB-6627
7635775	FI-SB-9670
7636995	FI-TC-7523
7636996	FI-TC-7522
7658273	FI-AX-7508
7673581	FI-SB-1324
7673582	FI-SB-1323
7674701	FI-SB-4538
7678717	FI-ES-4676
7678718	AL-ES-0265
7678718	FI-ES-4675
7683363	FI-SB-9693
7683364	FI-SB-9694
7701491	FI-AX-0087
7719062	FI-RK-3591
77362380	LN-AX-4758
77362381	LN-ES-4771
77362502	FI-AX-5092
77362503	FI-ES-5091
77362506	FI-AX-3826
77362507	FI-ES-2516
77362508	FI-ES-2517
77363706	AL-ES-5417
77363707	AL-ES-5418
77363829	OP-ES-4921
77363830	OP-ES-4922
77364750	AL-AX-5416
77364750	AL-RK-15075
7736514	FI-TC-2042
7736515	FI-TC-2045
77365223	FI-ES-8785
77365224	FI-ES-8786
77365591	AL-ES-10782
77365592	AL-ES-10781
77365815	FI-ES-12625
7747956	FI-SB-8782

...ALFA ROMEO MOOG

7750982	FI-SB-6622
7750983	FI-SB-6623
7750990	FI-SB-6626
7752285	FI-ES-4684
7755671	FI-SB-8801
7756218	FI-SB-8800
7757874	FI-SB-8787
7760424	FI-SB-6627
7760426	FI-SB-6763
7769900	FI-TC-2052
7769901	FI-TC-2053
7775343	FI-SB-1589
7775344	FI-SB-1590
7780450	FI-SB-6624
7820040638	K150173
82346006	LN-BJ-3153
82351945	LN-ES-3154
82398170	FI-BJ-3157
82406867	FI-WP-4685
82406867 (-)	FI-BJ-3157
82406868	FI-WP-4686
824068867	FI-WP-4685
824068868	FI-WP-4686
82463956	LN-BJ-4677
82480099	LN-BJ-0220
82480099	LN-ES-1770
9050452	AL-AX-1681
93189022	OP-AX-4160
93300662	FI-ES-4070
93501180 (-)	AL-SB-3170
93501180 (-)	FI-SB-1396
93511181 (-)	AL-SB-3170
93802209	FI-ES-4071
93802242	FI-BJ-4072
93807641	FI-SB-13286
9750079980	FI-ES-4078
98845024	FI-AX-2504
98845026	FI-AX-3974
98845030	FI-ES-2512
98845878	FI-AX-10827
9938779	K150026
9938779R	K150026
9941625	FI-AX-1232
9943835	K150071
9944452	AL-AX-1681
9944454	K150100
9945562	FI-AX-0086
9945565	AL-AX-1647
9946815	LN-AX-3904
9946816	K150166
9947361	AL-AX-1681
9947435	FI-ES-4675
9947436	FI-ES-4676
9947437	AL-ES-0265
9947437	FI-ES-4675
9947438	AL-ES-7513

...ALFA ROMEO MOOG

9947438	FI-ES-4676
9947713	FI-AX-1461
9947718	AL-AX-1699
9947719	FI-ES-2512
9947720	FI-ES-3525
9947838	FI-ES-4676
9947919	AL-ES-0050
9947920	AL-ES-0051
9947921	K150181
9947923	AL-AX-1223
9947926	FI-ES-3525
9948292	FI-AX-4431
9948296	LN-AX-2677
9948297	AL-AX-1435
9948343	FI-AX-1839
9949217	FI-AX-2503
9949218	FI-ES-0937
9950650	K150167
9950671	FI-ES-4675
9950672	FI-ES-4676
9950775	FI-ES-3525
9951288	AL-ES-0050
9951289	AL-ES-0051
9983325	FI-AX-1558
SE141140104A	FI-BJ-13405
SE141140104A	FI-BJ-7510

AUDI MOOG

1001398	VO-AX-0358
1001398	VO-RK-15009
1001713	VO-SB-6814
1007602	VO-WP-0451
1009591	VO-LS-0318
1009649	VO-SB-6815
1012632	VO-WP-0450
1044571	VO-SB-1195
1058378	VO-ES-8258
1058380	VO-ES-8259
113407361E	VO-BJ-0625
113415811C	VO-ES-0615
113415812C	VO-ES-0617
113415813D	VO-ES-9023
1233552	VO-DS-8257
1233553	VO-DS-8256
131405361E	VO-BJ-0609
131405371G	VO-BJ-0610
131415812	VO-ES-0594
131415813D	VO-ES-0618
131415821A	VO-ES-0614
133407361	VO-BJ-3222
170419804A	VO-DS-3224
171407153D	VO-WP-5088
171407153D	VO-WP-5089
171407181A	VO-SB-1325
171407182D	VO-SB-1326
171407365C	VO-BJ-3227

...AUDI	MOOG
171407365F	VO-BJ-3254
171419811	VO-ES-3226
171419821	VO-AX-3225
171513333	VO-SB-10061
191407151A (-)	VO-WP-8209
191407151B	VO-WP-8210
191407181D	VO-SB-1358
191407182	VO-SB-1329
191407190A	VO-SB-7418
191407365A	VO-BJ-7108
191411314	VO-SB-6725
191411315B	VO-LS-1516
191411329	VO-SB-7958
191412329	VO-SB-4861
191419803A	VO-DS-7142
191419804A	VO-DS-7105
191419811	VO-ES-7139
191419812	VO-ES-7106
191419821	VO-AX-7107
191422803A	VO-DS-7137
191422804	VO-DS-7140
191422821A	VO-AX-7138
191501541	VO-SB-1189
191512119	VO-SB-10057
191512333	VO-SB-10061
191512335	VO-SB-10061
191512339	VO-SB-10061
191512340	VO-SB-10061
1H0407151	VO-WP-8221
1H0407151	VO-WP-8254
1H0407151A	VO-WP-0530
1H0407152	VO-WP-0529
1H0407365	VO-BJ-7184
1H0411314	VO-SB-6788
1H0412365A	VO-SB-10053
1H0419803A	VO-DS-7180
1H0419804A	VO-DS-7182
1H0419821	VO-AX-7181
1H0422803 (-)	VO-AX-8286
1H0422803 A (-)	VO-AX-7183
1H0422803A	VO-DS-7190
1H0422803B	VO-DS-8204
1H0422803B (-)	VO-AX-0383
1H0422804 (-)	VO-AX-8286
1H0422804A	VO-DS-7191
1H0422804B	VO-DS-8205
1H0501541A	VO-SB-4169
1H9501541	VO-SB-4445
1J0199429	VO-SB-4523
1J0407151A	VO-WP-1552
1J0407151A	VO-WP-1553
1J0407151B	VO-WP-1552
1J0407151B	VO-WP-1553
1J0407151C	VO-WP-1552
1J0407151C	VO-WP-1553
1J0407181	VO-SB-1369

...AUDI	MOOG
1J0407181A	VO-SB-1369
1J0407365A	VO-BJ-8287
1J0407365B	VO-BJ-8287
1J0407365C	VO-BJ-8287
1J0407365D	VO-BJ-8287
1J0407365H	VO-BJ-8287
1J0407365J	VO-BJ-8287
1J0407366A	VO-BJ-8288
1J0407366B	VO-BJ-8288
1J0407366C	VO-BJ-8288
1J0407366D	VO-BJ-8288
1J0407366H	VO-BJ-8288
1J0411314	VO-SB-6818
1J0411314C	AU-SB-4847
1J0411314G	VO-SB-6796
1J0411314P	VO-SB-7422
1J0411314R	VO-SB-13250
1J0411314S	VO-SB-6818
1J0411314T	VO-SB-6796
1J0411315	VO-LS-0475
1J0411315	VO-LS-4916
1J0411315B	VO-LS-0475
1J0411315B	VO-LS-4916
1J0411315C	VO-LS-0475
1J0411315C	VO-LS-4916
1J0411315D	VO-LS-2406
1J0411315E	VO-LS-0475
1J0411315G	VO-LS-0475
1J0411315H	VO-LS-7327
1J0411315J	VO-LS-0475
1J0411315J	VO-LS-4916
1J0411316D	VO-LS-0456
1J0411327	VO-SB-14628
1J0412249	VO-SB-10052
1J0412249	VO-SB-10053
1J0412249	VO-SB-10067
1J0412331B	VO-SB-10053
1J0412331C	VO-SB-10053
1J0422803	VO-DS-8281
1J0422803A	VO-DS-1549
1J0422803A	VO-DS-8281
1J0422803B	VO-AX-13741
1J0422803B	VO-DS-1549
1J0422803B	VO-RK-15029
1J0422803B	VO-RK-15052
1J0422803B	VO-RK-15061
1J0422803C	VO-DS-8281
1J0422803E	VO-DS-1549
1J0422803H	VO-DS-1549
1J0422804	VO-DS-8284
1J0422804A	VO-DS-1548
1J0422804A	VO-DS-8284
1J0422804B	VO-AX-13741
1J0422804B	VO-DS-1548
1J0422804C	VO-DS-8284
1J0422804E	VO-DS-1548

...AUDI	MOOG
1J0422804H	VO-DS-1548
1J0422807	VO-AX-8286
1J0422807A	VO-AX-8286
1J0422807B	VO-RK-15029
1J0422807B	VO-RK-15052
1J0422807B	VO-RK-15061
1J0422811	VO-ES-8283
1J0422811A	VO-ES-8283
1J0422811B	VO-ES-1507
1J0422812	VO-ES-8285
1J0422812A	VO-ES-8285
1J0422812B	VO-ES-1506
1J0422812B	VO-ES-8285
1J0422821B	VO-AX-13741
1J0422821B	VO-RK-15029
1J0422821B	VO-RK-15052
1J0422821B	VO-RK-15061
1J0422831	K150182
1J0422831B	K150182
1J0501541C	VO-SB-0042
1J0501541D	VO-SB-4857
1J0505145A	VO-SB-10130
1J0505145B	VO-SB-10130
1J0505171B	VO-SB-10131
1J0505203	VO-SB-10179
1J0505365D	VO-SB-10179
1J0505365K	VO-SB-10179
1J0505365L	VO-SB-10179
1J0505365N	VO-SB-10179
1J0505466B	VO-LS-3680
1J0505466C	AU-LS-4193
1J0513353B	VO-SB-10063
1J0513353C	VO-SB-10063
1J0513353D	VO-SB-10063
1J0513353G	VO-SB-10063
1K0199231G	VO-SB-0430
1K0199231J	VO-SB-0430
1K0199232G	VO-SB-2337
1K0199232J	VO-SB-2337
1K0407151AA	VO-WP-1862
1K0407151AB	VO-WP-1862
1K0407151AC	VO-WP-1865
1K0407151AD	VO-WP-1865
1K0407151AH	VO-WP-1862
1K0407151BB	VO-WP-13307
1K0407151BC	VO-WP-1862
1K0407151BE	VO-WP-13307
1K0407151BG	VO-WP-13307
1K0407151M	VO-WP-1865
1K0407151P	VO-WP-1862
1K0407151Q	VO-WP-1862
1K0407151R	VO-WP-1865
1K0407152AA	VO-WP-1861
1K0407152AB	VO-WP-1861
1K0407152AC	VO-WP-1864
1K0407152AD	VO-WP-1864

...AUDI	MOOG
1K0407152AH	VO-WP-1861
1K0407152AK	VO-WP-1864
1K0407152BB	VO-WP-13308
1K0407152BC	VO-WP-1861
1K0407152BE	VO-WP-13308
1K0407152BG	VO-WP-13308
1K0407152M	VO-WP-1864
1K0407152P	VO-WP-1861
1K0407152Q	VO-WP-1861
1K0407152R	VO-WP-1864
1K0407182	VO-SB-0428
1K0407182A	VO-SB-0428
1K0407183M	VO-SB-10844
1K0407183P	VO-SB-10844
1K0407365B	VO-BJ-1860
1K0407365C	VO-BJ-1860
1K0407365E	VO-BJ-1860
1K0407366B	VO-BJ-1859
1K0407366C	VO-BJ-1859
1K0407366E	VO-BJ-1859
1K0411315B	VO-LS-1870
1K0411315J	VO-LS-1870
1K0411315K	VO-LS-1870
1K0411315P	VO-LS-1870
1K0411315R	VO-LS-1870
1K0423810A	VO-AX-1867
1K0423810A	VO-RK-15071
1K0423811A	VO-ES-1868
1K0423811B	VO-ES-1868
1K0423811C	VO-ES-10703
1K0423811C	VO-ES-1868
1K0423811D	VO-ES-10703
1K0423811E	VO-ES-10703
1K0423811E	VO-ES-1868
1K0423811F	VO-ES-1868
1K0423811G	VO-ES-10703
1K0423811G	VO-ES-1868
1K0423811J	VO-ES-10703
1K0423811J	VO-ES-1868
1K0423811K	VO-ES-10703
1K0423811K	VO-ES-1868
1K0423812A	VO-ES-1869
1K0423812B	VO-ES-1869
1K0423812C	VO-ES-10704
1K0423812C	VO-ES-1869
1K0423812D	VO-ES-10704
1K0423812E	VO-ES-10704
1K0423812E	VO-ES-1869
1K0423812F	VO-ES-1869
1K0423812G	VO-ES-10704
1K0423812G	VO-ES-1869
1K0423812J	VO-ES-10704
1K0423812J	VO-ES-1869
1K0423812K	VO-ES-10704
1K0423812K	VO-ES-1869
1K0426811E	VO-ES-1868

...AUDI	MOOG	...AUDI	MOOG	...AUDI	MOOG	...AUDI	MOOG
1K0501529E	VO-LS-0584	1S0423810A	VO-AX-12501	333512143A	VO-SB-10059	443419811D	AU-ES-7149
1K0501529F	VO-LS-0584	1S0423811A	VO-ES-13341	357407151	VO-WP-0232	443419812B	AU-ES-7150
1K0501529H	VO-LS-0584	1S0423812A	VO-ES-13342	357407182	VO-SB-1329	443419812D	AU-ES-7150
1K0501529J	VO-LS-0584	1T0505223F	VO-TC-14579	357407182F	VO-SB-1329	443505351P	AU-TC-7207
1K0501530B	VO-LS-2205	1T0505224F	VO-TC-14580	357407365	VO-BJ-7154	443505352P	AU-TC-7219
1K0501530C	VO-LS-2205	251407077	VO-SB-3223	357411313A	VO-SB-6798	443511247D	AU-SB-4488
1K0501541C	VO-SB-7914	251407175	VO-SB-4471	357411314A	VO-SB-6735	443511523B	AU-SB-4479
1K0505145E	VO-SB-8447	251407179	VO-SB-4466	357411315A	VO-LS-1165	443512331	AU-SB-9328
1K0505145F	VO-SB-8448	251407183	VO-SB-4475	357411315C	VO-LS-1088	4A0399415	AU-SB-4525
1K0505145G	VO-SB-8447	251407187B	VO-BJ-3269	357412249	VO-SB-10067	4A0399415B	AU-SB-4525
1K0505145H	VO-SB-8448	251407361	VO-BJ-3270	357412319B	VO-SB-10067	4A0407151	AU-TC-8200
1K0505145J	VO-SB-8447	251419081	VO-SB-4515	357412329	VO-SB-10056	4A0407152	AU-TC-8201
1K0505145K	VO-SB-8448	251419803	VO-DS-3266	357412331A	VO-SB-10067	4A0407181	AU-SB-1037
1K0505171C	VO-SB-7916	251419803 (-)	VO-AX-3268	357419803	VO-DS-7155	4A0407181A	AU-SB-1037
1K0505173C	VO-SB-7916	281407077	VO-SB-3076	357419803 A (-)	VO-AX-7157	4A0407183C	AU-SB-1097
1K0505203A	VO-SB-8812	281407179	VO-SB-3081	357419804	VO-DS-7156	4A0407183D	AU-SB-1097
1K0505223E	VO-TC-10775	281407180	VO-SB-3044	357422803	VO-DS-8266	4A0411327	AU-SB-1722
1K0505223H	VO-TC-10775	281407187	VO-BJ-3245	357422803 (-)	VO-AX-7159	4A0411327F	AU-SB-3200
1K0505223K	VO-TC-10775	281407361B	VO-BJ-3246	357501541A	VO-SB-3052	4A0412377CS	AU-SB-8995
1K0505224E	VO-TC-10776	281411045	VO-SB-4535	357512333	VO-SB-10057	4A0419801A	AU-DS-8231
1K0505224H	VO-TC-10776	281415303B	VO-DS-3233	357512333C	VO-SB-10059	4A0419802A	AU-DS-8232
1K0505224K	VO-TC-10776	281415701	VO-ES-3241	357512335B	VO-SB-10059	4A0419811A	AU-ES-8206
1K0505279A	VO-SB-8811	281415711A	VO-ES-3242	3A0422803C	VO-DS-8264	4A0419812A	AU-ES-8207
1K0505311AA	VO-TC-8737	281415801	VO-DS-0796	3A0422803E	VO-DS-0771	4A0505389	VO-LS-2421
1K0505311AB	VO-TC-8737	281415801D (-)	VO-ES-1835	3A0422804C	VO-DS-8265	4A0511247	AU-SB-4484
1K0505311J	VO-TC-8737	281415802	VO-DL-3253	3B0513353	VO-SB-10064	4A0511247B	AU-SB-4508
1K0505311R	VO-TC-8737	281415811	VO-ES-3239	3B7412377A	VO-SB-10065	4A0511249	AU-SB-4500
1K0505311S	VO-TC-8737	281415812	VO-ES-3240	3C0199231A	VO-SB-5010	4B0407515	VO-SB-1362
1K0505311T	VO-TC-8737	291415711D	VO-ES-7125	3C0199231B	VO-SB-5010	4B0419801B	VO-DS-8226
1K0505323H	VO-TC-0586	2D0511413B	ME-SB-7898	3C0199231D	VO-SB-5010	4B0419801E	VO-DS-8226
1K0505323N	VO-TC-0586	2E0411041C	ME-SB-7893	3C0199231E	VO-SB-5010	4B0419801M	VO-DS-8226
1K0505465AA	VO-LS-0418	2H0407021B	VO-WP-13729	3C0407151A	VO-WP-5008	4B0419811B	VO-ES-8227
1K0505465C	VO-LS-0418	2H0407021B (-)	VO-BJ-13732	3C0407151A	VO-WP-5009	4B0419811C	VO-ES-8227
1K0505465C (-)	VO-SB-15105	2H0407022B	VO-WP-13730	3C0407151B	VO-WP-5008	4B0419811E	VO-ES-8227
1K0505465J	VO-LS-0418	2H0407022B (-)	VO-BJ-13732	3C0407151B	VO-WP-5009	4B0419811F	VO-ES-8227
1K0505465J (-)	VO-SB-15105	2H0407077A	VO-SB-13737	3C0407151E	VO-WP-5008	4B0419811G	AU-ES-3839
1K0505465K	VO-LS-0418	2H0407151A	VO-BJ-13732	3C0407151E	VO-WP-5009	4B0501521E	VO-SB-8445
1K0505465K (-)	VO-SB-15105	2H0407151A	VO-BJ-13733	3C0407151G	VO-WP-5008	4B0501522E	VO-SB-8446
1K0505541C	VO-SB-4930	2H0407151A	VO-WP-13727	3C0407151G	VO-WP-5009	4B0511327	AU-SB-13374
1K0505541D	VO-SB-4930	2H0407152A	VO-BJ-13732	3C0407365A	VO-BJ-5011	4B3407151A	AU-TC-0723
1K0505543A	VO-SB-7915	2H0407152A	VO-BJ-13733	3C0407365B	VO-BJ-5011	4B3407151C	AU-TC-0723
1K0505553	VO-SB-12548	2H0407152A	VO-WP-13728	3C0407366A	VO-BJ-5012	4B3407151E	AU-TC-0723
1K0505553	VO-SB-7880	2H0407182A	VO-SB-13735	3C0407366B	VO-BJ-5012	4B3407151F	AU-TC-0723
1K0505553A	VO-SB-12548	2H0407183A	VO-SB-13734	3C0505223C	VO-TC-14977	4B3407151K	AU-TC-0723
1K0505553A	VO-SB-7880	2H0411317	VO-LS-13724	3C0505223E	VO-TC-14977	4B3498998	VO-RK-7925
1K0511327AQ	VO-SB-8444	2H0412333A	VO-SB-13736	3C0505224C	VO-TC-14978	4D0407151A	VO-TC-8228
1K0511327AR	VO-SB-7199	2K0505465B	VO-LS-3980	3C0505224E	VO-TC-14978	4D0407151B	VO-TC-8228
1K0511327AS	VO-SB-7897	2K0511413A	VO-SB-7892	3C0505541	VO-SB-10574	4D0407151C	VO-SB-1363
1K0511327BA	VO-SB-13843	2K0511413C	VO-SB-7892	3C0513353	VO-SB-10089	4D0407151D	VO-TC-8228
1K0511439E	VO-SB-7171	2K0511413D	VO-SB-7892	3C0513353C	VO-SB-10091	4D0407151E	VO-TC-8228
1K0513353G	VO-SB-10089	321419811	VO-ES-3026	3R0505323	VO-TC-13241	4D0407151G	VO-TC-8228
1K0513353H	VO-SB-10090	321419811A	VO-ES-3026	3R0505324	VO-TC-13242	4D0407151H	VO-TC-8228
1K0513353J	VO-SB-10091	321501541	VO-SB-4478	431419831	K150021	4D0407151J	VO-TC-8228
1K0513353R	VO-SB-10091	321512117	VO-SB-10057	433419811D	AU-ES-7149	4D0407151K	VO-TC-8228
1S0407151	VO-WP-13471	321512117	VO-SB-10059	433419812D	AU-ES-7150	4D0407151P	VO-TC-8228
1S0407152	VO-WP-13472	321512335	VO-SB-10057	443419811B	AU-ES-7149	4D0407181F	VO-SB-1366

...AUDI	MOOG
4D0407181H	VO-SB-1366
4D0407182E	VO-SB-1365
4D0407182G	VO-SB-1365
4D0407183AB	VO-SB-1364
4D0407183AC	VO-SB-1364
4D0407183M	VO-SB-1364
4D0407183N	VO-SB-1364
4D0407183P	VO-SB-1364
4D0407183Q	VO-SB-1364
4D0407505B	AU-TC-8239
4D0407505D	AU-TC-8239
4D0407505F	AU-TC-8239
4D0407505H	AU-TC-8239
4D0407509J	AU-TC-0674
4D0407509K	AU-TC-0674
4D0407510J	AU-TC-0678
4D0407510K	AU-TC-0678
4D0407515C	VO-SB-1362
4D0407516C	VO-SB-1363
4D0407693AC	VO-TC-8229
4D0407693AD	VO-TC-8229
4D0407693E	VO-TC-8229
4D0407693H	VO-TC-8229
4D0407693K	VO-TC-8229
4D0407693M	VO-TC-8229
4D0407693N	VO-TC-8229
4D0407694AC	VO-TC-8229
4D0407694AC	VO-TC-8230
4D0407694AD	VO-TC-8230
4D0407694E	VO-TC-8230
4D0407694H	VO-TC-8230
4D0407694K	VO-TC-8230
4D0407694M	VO-TC-8230
4D0407694N	VO-TC-8230
4D0411317D	VO-LS-0157
4D0411317G	VO-LS-0157
4D0411317J	VO-LS-0157
4D0411317K	AU-LS-14840
4D0411317K	VO-LS-0157
4D0411327E	VO-SB-6748
4D0411327F	VO-SB-6749
4D0411327G	VO-SB-6748
4D0411327H	VO-SB-6749
4D0411327J	AU-SB-7912
4D0412369A	AU-SB-9515
4D0412377F	VO-SB-10060
4D0419801B	VO-DS-8226
4D0419801B (-)	VO-AX-8291
4D0419801B (-)	VO-RK-15046
4D0419801B (-)	VO-RK-15049
4D0419801B (-)	VO-RK-15050
4D0419801B (-)	VO-RK-15064
4D0419801B (-)	VO-RK-15065
4D0419801C	VO-DS-8226
4D0419801C (-)	VO-AX-8291
4D0419801C (-)	VO-RK-15046

...AUDI	MOOG
4D0419801C (-)	VO-RK-15049
4D0419801C (-)	VO-RK-15050
4D0419801C (-)	VO-RK-15064
4D0419801C (-)	VO-RK-15065
4D0419801D	VO-DS-8226
4D0419801E	VO-DS-8226
4D0419801G	VO-DS-8226
4D0419801L	VO-DS-8226
4D0419811A	VO-ES-8227
4D0419811B	VO-ES-8227
4D0419811G	VO-ES-8227
4D0419811H	VO-ES-8227
4D0419811J	AU-ES-3839
4D0419831A	K150140
4D0419831B	K150082
4D0419831B	K150139
4D0419831B	K150140
4D0419831D	K150082
4D0419831D	K150139
4D0419831D	K150140
4D0419831E	K150082
4D0419831E	K150139
4D0419831E	K150140
4D0419831E	K150232
4D0419831K	K150139
4D0419831K	K150142
4D0419831K	K150232
4D0422821	VO-AX-8291
4D0422821	VO-RK-15046
4D0422821	VO-RK-15049
4D0422821	VO-RK-15050
4D0422821	VO-RK-15064
4D0422821	VO-RK-15065
4D0422821A	VO-AX-8291
4D0422821A	VO-RK-15046
4D0422821A	VO-RK-15049
4D0422821A	VO-RK-15050
4D0422821A	VO-RK-15064
4D0422821A	VO-RK-15065
4D0501529A	VO-LS-2419
4D0501529E	VO-LS-2419
4D0501529F	VO-LS-2419
4D0505465D	VO-LS-8240
4D0505547C	AU-LS-8241
4D0505548C	AU-LS-8242
4D0511523A	AU-SB-4479
4D0511523C	AU-SB-4479
4E0407151G	AU-TC-5062
4E0407151L	AU-TC-5062
4E0407182C	AU-SB-4844
4E0407505B	VO-TC-4932
4E0407505E	VO-TC-4932
4E0407506B	VO-TC-4933
4E0407506E	VO-TC-4933
4E0407509B	VO-TC-4935
4E0407509E	VO-TC-4935

...AUDI	MOOG
4E0407509G	VO-TC-4935
4E0407509K	VO-TC-4935
4E0407510B	VO-TC-4936
4E0407510E	VO-TC-4936
4E0407510G	VO-TC-4936
4E0407510K	VO-TC-4936
4E0407693C	AU-TC-5063
4E0407693F	AU-TC-5063
4E0407693M	AU-TC-5063
4E0407693N	AU-TC-5063
4E0407694C	AU-TC-5064
4E0407694F	AU-TC-5064
4E0407694N	AU-TC-5064
4E0411317E	AU-LS-4934
4E0419801C	AU-DS-5061
4E0419811B	AU-ES-4918
4E0419811C	AU-ES-4918
4E0419811D	AU-ES-4918
4E0419811E	AU-ES-4918
4E0419821	AU-AX-4428
4E0419831	K150233
4E0501529C	AU-TC-5065
4E0501529D	AU-TC-5065
4E0505203B	VO-SB-13485
4E0505203D	VO-SB-13484
4E0505465G	AU-LS-3898
4E0505547A	AU-LS-5067
4E0505548A	AU-LS-5068
4F0 505 145	AU-SB-7443
4F0407151	AU-TC-4937
4F0407151A	AU-TC-4937
4F0407183A	AU-SB-4843
4F0407183C	AU-SB-10586
4F0407183E	AU-SB-10586
4F0407183E	AU-SB-4843
4F0407693	AU-TC-4945
4F0407693B	AU-TC-4945
4F0407693C	AU-TC-4945
4F0407693G	AU-TC-4945
4F0407693H	AU-TC-4945
4F0407694	AU-TC-4946
4F0407694B	AU-TC-4946
4F0407694C	AU-TC-4946
4F0407694G	AU-TC-4946
4F0407694H	AU-TC-4946
4F0419811C	AU-ES-3839
4F0419811D	AU-ES-3839
4F0419811E	VO-ES-8227
4F0422821	AU-AX-4712
4F0422821D	AU-AX-4712
4F0498811	VO-ES-8227
4F0498811A	AU-ES-3839
4F0501529C	AU-TC-5479
4F0501529E	AU-TC-5479
4F0505145A	AU-SB-7444
4F0505465N	AU-LS-5421

...AUDI	MOOG
4F0505465P	AU-LS-5475
4F0505465Q	AU-LS-5421
4F0-513-353A	VO-SB-10977
4F0-513-353B	VO-SB-10977
4F0-513-353C	VO-SB-10977
4F0-513-353D	VO-SB-10977
4G0 407 693 D	AU-TC-13665
4G0 407 693 H	AU-TC-13665
4G0 407 693 J	AU-TC-13665
4G0 407 694 D	AU-TC-13666
4G0 407 694 H	AU-TC-13666
4G0 407 694 J	AU-TC-13666
4G0407689A	AU-BJ-13260
4G0407689C	AU-BJ-13260
4G0423810	AU-AX-12545
4G0423810A	AU-AX-12545
4G0423811A	AU-ES-10907
4G0423812A	AU-ES-10908
4G0423812A	AU-ES-7378
4H0407151A	AU-TC-14553
4H0407151B	AU-TC-14553
4H0407152A	AU-TC-14554
4H0407152B	AU-TC-14554
4H0407182B	AU-SB-13664
4H0407514A	AU-SB-10693
4H0407515	AU-SB-10693
4H0407515A	AU-SB-10693
4H0407515B	AU-SB-10693
4H0407689	AU-BJ-13655
4H0407689A	AU-BJ-13655
4H0407693C	AU-TC-13653
4H0407693D	AU-TC-13653
4H0407693E	AU-TC-13653
4H0407693F	AU-TC-13653
4H0407694C	AU-TC-13654
4H0407694D	AU-TC-13654
4H0407694E	AU-TC-13654
4H0407694F	AU-TC-13654
4H0411317A	AU-LS-8351
4H0411317C	AU-LS-10678
4H0411317C	AU-LS-8351
4H0422810	AU-AX-5193
4H0422810A	AU-AX-5193
4H0422817A	AU-ES-13647
4H0422818A	AU-ES-13648
4J042281	K150022
4M0411317	AU-LS-10678
4Z7698507	VO-SB-10060
5104065AA	ME-SB-7982
535411315	VO-DS-7187
561407151A	VO-WP-13657
561407151C	VO-WP-13657
561407152A	VO-WP-13658
561407152C	VO-WP-13658
561423810	VO-AX-13381
5C0407151A	VO-WP-10817

...AUDI	MOOG
5C0407151B	VO-WP-10817
5C0407152A	VO-WP-10818
5C0407152B	VO-WP-10818
5C0407183A	VO-SB-10844
5Q0 501 529 B (-)	VO-SB-14577
5Q0 501 529 C (-)	VO-SB-14577
5Q0407151J	VO-WP-13839
5Q0407151J+	VO-WP-13841
5Q0407151L	VO-WP-13839
5Q0407151L+	VO-WP-13841
5Q0407151M	VO-WP-13839
5Q0407151M+	VO-WP-13841
5Q0407151R	VO-WP-13839
5Q0407151R+	VO-WP-13841
5Q0407152J	VO-WP-13840
5Q0407152J+	VO-WP-13842
5Q0407152L	VO-WP-13840
5Q0407152L+	VO-WP-13842
5Q0407152M+	VO-WP-13842
5Q0407152R	VO-WP-13840
5Q0407152R+	VO-WP-13842
5Q0407182	VO-SB-13743
5Q0407182A	VO-SB-13743
5Q0407182F	VO-SB-13656
5Q0407183E	VO-SB-13656
5Q0407365A	VO-BJ-13581
5Q0407366A	VO-BJ-13582
5Q0411315B	VO-LS-13963
5Q0501529C (-)	VO-SB-14578
5Q0505323C	VO-TC-0586
5Q0505465C	VO-LS-13744
5Q0505541A	VO-SB-4930
5Q0505543B	VO-SB-14578
5U0407365A	VO-BJ-7927
5U0407366A	VO-BJ-7926
5U0422811A	AU-ES-3721
6C0423810A	VO-AX-14746
6C0423810B	VO-AX-14746
6C0423810C	VO-AX-14746
6C0423811A	VO-ES-14747
6C0423812A	VO-ES-14748
6E0411315	VO-LS-4931
6E0419831	K150083
6E0419831	K150139
6E0419831	K150142
6E0419831	K150187
6E0419831	K150232
6K0411315	VO-LS-6994
6K0422803A (-)	VO-AX-7107
6K0422803B	VO-AX-7138
6K0422803D	VO-DS-1511
6K0422803E	VO-DS-7333
6K0422804D	VO-DS-1512
6K0422804E	VO-DS-7334
6K0501541A	VO-SB-7978
6N0407151	VO-WP-0235

...AUDI	MOOG
6N0407151	VO-WP-0236
6N0407151A	VO-WP-1520
6N0407181	VO-SB-1368
6N0407182	VO-SB-1367
6N0407365	VO-BJ-8249
6N0407365A	VO-BJ-8248
6N0411315	VO-LS-0463
6N0411315A	VO-LS-3353
6N0411811	VO-ES-8247
6N0411812	VO-ES-8246
6N0412249C	VO-SB-10066
6N0412331	VO-SB-10052
6N0412331A	VO-SB-10052
6N0412331E	VO-SB-10068
6N0419803	VO-DS-8245
6N0419803 (-)	VO-AX-1282
6N0419804	VO-DS-8244
6N0422803 (-)	VO-AX-8275
6N0422803A	VO-DS-3535
6N0422804A	VO-DS-3536
6N0422831	K150083
6N0501541D	VO-SB-4482
6Q0407151D	VO-WP-1116
6Q0407151D	VO-WP-1989
6Q0411314E	VO-SB-7419
6Q0411314F	VO-SB-7161
6Q0411314J	VO-SB-7896
6Q0411314L	VO-SB-7896
6Q0411314M	VO-SB-7895
6Q0411314N	VO-SB-7419
6Q0411314P	VO-SB-7896
6Q0411314Q	VO-SB-7895
6Q0411314R	VO-SB-7419
6Q0411315A	VO-LS-0494
6Q0411315B	VO-LS-0494
6Q0411315C	VO-LS-0494
6Q0411315D	VO-LS-0494
6Q0411315E	VO-LS-0494
6Q0411315F	VO-LS-0494
6Q0411315G	VO-LS-0494
6Q0411315J	VO-LS-0494
6Q0411315N	VO-LS-0494
6Q0422804P	SK-DS-0416
6Q0423803B	SK-DS-0415
6Q0423803B (-)	SE-AX-0091
6Q0423803B (-)	VO-RK-15053
6Q0423803B (-)	VO-RK-15062
6Q0423803E	SK-DS-0415
6Q0423804B	SK-DS-0416
6Q0423804C	SK-DS-3993
6Q0423804E	SK-DS-0416
6Q0423804G	SK-DS-3993
6Q0423810C	VO-AX-12550
6Q0423811	AU-ES-3721
6Q0423811C	AU-ES-3721
6Q0423812	AU-ES-3723

...AUDI	MOOG
6Q0423812C	AU-ES-3723
6Q0423821B	SE-AX-0091
6Q0423821B	VO-RK-15053
6Q0423821B	VO-RK-15062
6Q0423831D	K150235
6Q04238810C	SK-DS-3993
6Q04238812C	SK-DS-3993
6R0407151	VO-WP-8837
6R0407151A	VO-WP-8853
6R0407151B	VO-WP-8853
6R0407151C	VO-WP-8853
6R0407151E	VO-WP-8837
6R0407151F	VO-WP-8853
6R0407152	VO-WP-8838
6R0407152A	VO-WP-8854
6R0407152B	VO-WP-8854
6R0407152C	VO-WP-8854
6R0407152E	VO-WP-8838
6R0407152F	VO-WP-8854
6R0407181B	AU-SB-7331
6R0407365	VO-BJ-7927
6R0407365A	VO-BJ-7927
6R0407365B	VO-BJ-7927
6R0407366	VO-BJ-7926
6R0407366A	VO-BJ-7926
6R0407366B	VO-BJ-7926
6R0411315	VO-LS-0494
6R0411315A	VO-LS-0494
6R0423803C	VO-AX-8759
6R0423803D	VO-AX-8759
6R0423804C	VO-AX-8759
6R0423804D	VO-AX-8759
6R0423810	VO-AX-8759
6R0423810A	VO-AX-8759
6R0423811A	AU-ES-3721
6RD423810	VO-AX-14749
6RU423810	VO-AX-14749
6U0422831	K150083
6X0407151A	VO-WP-1519
6X0411313	VO-SB-7147
6X0411313A	VO-SB-8813
6X0419803 A (-)	VO-AX-1812
6X0422803 A (-)	VO-AX-1715
6X0422811	VO-ES-0511
6X0422812	VO-ES-0510
701407077	VO-SB-4493
701407087	VO-SB-4492
701407151A	VO-TC-5117
701407152A	VO-TC-5118
701407183	VO-SB-4463
701407187	VO-BJ-7192
701407361	VO-BJ-7193
701411041	VO-SB-7200
701411049	VO-LS-1087
701411049B	VO-LS-1089
701419803 C (-)	VO-AX-8016

...AUDI	MOOG
701419803 C (-)	VO-RK-15030
701419803 C (-)	VO-RK-15035
701419803C	VO-DS-8211
701419803D	VO-DS-2183
701419804C	VO-DS-8213
701419804D	VO-DS-1622
701419804F	VO-DS-0719
701419811A	VO-ES-8215
701419811B	VO-ES-8216
701419811C	VO-ES-8255
701419811E	VO-ES-0368
701419812	VO-ES-8217
701419812A	VO-ES-8218
701419812B	VO-ES-8000
701419812D	VO-ES-0369
702419803 A (-)	VO-AX-8015
702419803D	VO-DS-0720
7200946	VO-BJ-0319
7820040635	K150140
7820040701	K150139
7820040701	K150142
7820040701	K150232
7D0407140	VO-SB-4449
7D0407151A	VO-TC-10815
7D0407152A	VO-TC-10816
7D0407183	VO-SB-4452
7D0407361	VO-BJ-0370
7D0411045	VO-SB-4446
7E0407361	VO-BJ-1990
7E0412319	VO-SB-10087
7H0407151E	VO-WP-2316
7H0407152E	VO-WP-2317
7H0407182	VO-SB-13719
7H0407182A	VO-SB-2319
7H0407183	VO-SB-2318
7H0411313	VO-SB-2320
7H0411317	VO-LS-2311
7H0412249A	VO-SB-10087
7H0419803 C (-)	VO-AX-2313
7H0422817B	VO-ES-2314
7H0422818B	VO-ES-2315
7H0501132A	VO-SB-13717
7H0511414	VO-SB-10877
7H5411313A	VO-SB-10550
7H5411313B	VO-SB-13583
7H5511414	VO-SB-10878
7H5511414A	VO-SB-13288
7H8407361	VO-BJ-7050
7L0407021	VO-WP-3071
7L0407021A	VO-WP-3071
7L0407021B	VO-WP-3071
7L0407077	VO-RK-4858
7L0407151C	VO-WP-3060
7L0407151E	VO-WP-3060
7L0407151H	VO-WP-3060
7L0407152C	VO-WP-3061

...AUDI	MOOG
7L0407152E	VO-WP-3061
7L0407152H	VO-WP-3061
7L0407182C	VO-SB-5624
7L0407182E	VO-SB-5624
7L0407182F	VO-SB-12647
7L0407182G	VO-SB-12647
7L0407182V	VO-SB-12647
7L0407183A	VO-SB-5623
7L0411317	VO-LS-3053
7L0411317 (-)	AU-SB-7891
7L0412333A	VO-SB-3073
7L0422817B	VO-ES-3058
7L0422817C	VO-ES-3058
7L0422817D	VO-ES-3058
7L0422818B	VO-ES-3059
7L0422818C	VO-ES-3059
7L0422818D	VO-ES-3059
7L0422821	VO-AX-3054
7L0501529C	AU-TC-14871
7L0501529D	AU-TC-14871
7L0505323A	AU-TC-7888
7L0505323A (-)	AU-SB-7889
7L0505323A (-)	AU-SB-7890
7L0505397	AU-TC-8985
7L0505397 (-)	VO-SB-12546
7L0505398	AU-TC-10622
7L0505398 (-)	VO-SB-12546
7L0505465C	VO-LS-4397
7L0505465D	VO-LS-4397
7L0505466C	VO-LS-4398
7L0505466D	VO-LS-4398
7L8407021	VO-TC-13968
7L8407151D	AU-TC-8355
7L8407151E	AU-TC-8355
7L8407151F	AU-TC-7887
7L8407151K	AU-TC-7887
7L8407152D	AU-TC-8356
7L8407152E	AU-TC-8356
7L8407152F	AU-TC-7886
7L8407152K	AU-TC-7886
7L8407183	VO-SB-5623
7L8501529A	AU-TC-14871
7L8505465B	VO-LS-4397
7M0407181A	VO-SB-1195
7M0501541	VO-SB-1212
7M0505222B	VO-SB-8810
7M0511414C	VO-SB-13464
7M3498317	VO-RK-1210
7P0407021	VO-TC-13465
7P0407077	VO-SB-13466
7P0407151C	AU-TC-7887
7P0407152C	AU-TC-7886
811199415A	AU-SB-4458
811199419B	AU-SB-4461
811199419C	AU-SB-4461
811407147B	VO-WP-0737

...AUDI	MOOG
811407181	VO-SB-1359
811407181A	VO-SB-1359
811411313A	AU-SB-1602
811411327A	AU-SB-4470
811411327B	AU-SB-1602
811412323	AU-SB-9520
811412323C	AU-SB-9520
811412323D	AU-SB-9520
811412331	VO-SB-10056
811412365	AU-SB-9520
811419801C	VO-DS-3924
811419801E	VO-DS-3924
811419802J	VO-DS-3925
811419812	VO-ES-3026
811419812A	AU-ES-3916
811419812B	AU-ES-3916
811419831B	K150022
811511247	AU-SB-1136
823199415B	AU-SB-4458
823407181	AU-SB-1153
823407365E	VO-BJ-3030
823411313A	AU-SB-1602
823412355	VO-SB-10058
823419811	VO-ES-3026
823419831	K150021
823512097	VO-SB-10059
855407365A	VO-BJ-3917
855407365B	VO-BJ-3917
855407366A	VO-BJ-3918
855407366B	VO-BJ-3918
857407147A	VO-WP-0132
857407148A	VO-WP-0131
857407181	VO-SB-1361
857407474	VO-SB-1360
861407151A	VO-TC-7162
861407151B	AU-TC-3035
861407183	VO-SB-1177
861411313	VO-SB-6633
861412323A	AU-SB-9519
861419801C	VO-DS-3028
861419801D	VO-DS-3028
861419802	VO-ES-3026
861419812	VO-ES-3026
861511271	VO-SB-4468
861719812	VO-ES-3026
862419802	VO-DS-7122
867411313	VO-SB-6633
871412323A	AU-SB-9519
871412323B	AU-SB-9519
871419801A	VO-DS-7121
871419802	VO-DS-7123
871511423	VO-SB-13631
893199415	AU-SB-4458
893199419	AU-SB-4461
893407147C	VO-WP-0132
893407147E	VO-SB-1361

...AUDI	MOOG
893407147G	VO-WP-0737
893407148C	VO-WP-0131
893407148E	VO-SB-1361
893407365B	AU-BJ-7175
893407365D	AU-BJ-7175
893407365F	AU-BJ-7170
893407366	AU-BJ-7174
893407366B	AU-BJ-7177
893407366D	AU-BJ-7177
893407366F	AU-BJ-7174
893407465	AU-LS-7179
893407465A	AU-LS-7179
893411327E	AU-SB-6651
893419802	AU-DS-7197
895407147A	AU-WP-0154
895407147A + Ball Joint	AU-WP-0154
895407147A + Ball Joint	AU-WP-0155
895407148A	AU-WP-0155
895407148A	VO-SB-1361
895407365	AU-BJ-7175
895407366	AU-BJ-7177
895505389	AU-LS-3944
8A0199415B	AU-SB-4506
8A0199415C	AU-SB-4506
8A0199419	AU-SB-4469
8A0407181	VO-SB-1361
8A0407365	AU-BJ-7175
8A0407366	AU-BJ-7177
8A0407465	AU-LS-7179
8A0407465B	AU-LS-7179
8A0407465C	AU-LS-7179
8A0412323D	AU-SB-9520
8A0419812	AU-ES-3916
8A0501530B	AU-TC-1789
8A0501530C	AU-TC-1789
8A0501541	AU-SB-4448
8A0505465C	AU-LS-8295
8A0505466C	AU-LS-8296
8A0511247B	AU-SB-4489
8A0512333	AU-SB-9522
8A0512335	AU-SB-9522
8D0407151E	VO-TC-8228
8D0407505A	VO-TC-4000
8D0407505B	VO-TC-4000
8D0407505F	VO-TC-4000
8D0407505H	VO-TC-4000
8D0407505K	VO-TC-4000
8D0407506A	VO-TC-4001
8D0407506B	VO-TC-4001
8D0407506F	VO-TC-4001
8D0407506H	VO-TC-4001
8D0407506K	VO-TC-4001
8D0407507E	VO-TC-4000
8D0407509A	AU-TC-0674
8D0407509C	AU-TC-0674
8D0407509E	AU-TC-0674

...AUDI	MOOG
8D0407509F	AU-TC-0674
8D0407510A	AU-TC-0678
8D0407510C	AU-TC-0678
8D0407510E	AU-TC-0678
8D0407510F	AU-TC-0678
8D0407515A	VO-SB-1362
8D0407515B	VO-SB-1362
8D0407515C	VO-SB-1362
8D0411317D	VO-LS-0157
8D0411317D	VO-LS-0357
8D0411317D (-)	VO-SB-10149
8D0411318D	VO-LS-0356
8D0419831D	K150082
8D0419831D	K150139
8D0419831D	K150140
8D0419831J	K150139
8D0419831J	K150142
8D0419831J	K150232
8D0419831K	K150139
8D0419831K	K150142
8D0419831K	K150232
8D0498998	VO-RK-5000
8D0498998S1	VO-RK-5001
8D0501530	AU-DS-8294
8D0501541D	AU-SB-4455
8D0505465	AU-LS-8295
8D0505466	AU-LS-8296
8D0511327C	VO-SB-14966
8D0407505K	VO-TC-4000
8E0 513 353 D	VO-SB-10977
8E0407151E	VO-TC-0892
8E0407151K	VO-TC-0892
8E0407151L	VO-TC-0892
8E0407151M	VO-TC-0892
8E0407151N	VO-TC-0892
8E0407151R	VO-TC-0892
8E0407151RS2	VO-RK-5002
8E0407181B	AU-SB-8106
8E0407181C	AU-SB-8106
8E0407505A	AU-TC-6995
8E0407505A	VO-TC-4000
8E0407505C	AU-TC-6995
8E0407505C	VO-TC-4000
8E0407505E	AU-TC-6995
8E0407505P	AU-TC-6995
8E0407505P	VO-TC-4000
8E0407505Q	AU-TC-6995
8E0407506A	AU-TC-6996
8E0407506A	VO-TC-4001
8E0407506C	AU-TC-6996
8E0407506C	VO-TC-4001
8E0407506E	AU-TC-6996
8E0407506P	AU-TC-6996
8E0407506P	VO-TC-4001
8E0407506Q	AU-TC-6996
8E0407509A	AU-TC-0674

...AUDI	MOOG
8E0407509A	AU-TC-6997
8E0407509C	AU-TC-0674
8E0407509C	AU-TC-6997
8E0407509E	AU-TC-6997
8E0407509P	AU-TC-0674
8E0407509P	AU-TC-6997
8E0407509Q	AU-TC-6997
8E0407510A	AU-TC-0678
8E0407510A	AU-TC-6998
8E0407510C	AU-TC-0678
8E0407510C	AU-TC-6998
8E0407510E	AU-TC-6998
8E0407510P	AU-TC-0678
8E0407510P	AU-TC-6998
8E0407510Q	AU-TC-6998
8E0407693	VO-TC-8229
8E0407693AA	AU-TC-4696
8E0407693AC	AU-TC-4696
8E0407693AC	VO-TC-8229
8E0407693AD	AU-TC-4696
8E0407693AG	VO-TC-8229
8E0407693AJ	AU-TC-4696
8E0407693AJ	VO-TC-8229
8E0407693AK	AU-TC-4696
8E0407693AK	VO-TC-8229
8E0407693AL	AU-TC-4696
8E0407693AM	AU-TC-4696
8E0407693AM	VO-TC-8229
8E0407693E	VO-TC-8229
8E0407693H	VO-TC-8229
8E0407693K	VO-TC-8229
8E0407693N	AU-TC-4696
8E0407693N	VO-TC-8229
8E0407693P	VO-TC-8229
8E0407693Q	VO-TC-8229
8E0407693T	AU-TC-4696
8E0407693T	VO-TC-8229
8E0407694	VO-TC-8230
8E0407694AA	AU-TC-4697
8E0407694AC	AU-TC-4697
8E0407694AC	VO-TC-8229
8E0407694AD	AU-TC-4697
8E0407694AG	VO-TC-8230
8E0407694AJ	AU-TC-4697
8E0407694AJ	VO-TC-8229
8E0407694AK	AU-TC-4697
8E0407694AK	VO-TC-8229
8E0407694AL	AU-TC-4697
8E0407694AL	VO-TC-8229
8E0407694AM	AU-TC-4697
8E0407694AM	VO-TC-8229
8E0407694E	VO-TC-8230
8E0407694H	VO-TC-8230
8E0407694K	VO-TC-8230
8E0407694N	AU-TC-4697
8E0407694N	VO-TC-8229

...AUDI	MOOG
8E0407694P	VO-TC-8230
8E0407694Q	VO-TC-8230
8E0407694T	AU-TC-4697
8E0407694T	VO-TC-8229
8E0411317	AU-LS-3717
8E0411317 (-)	AU-SB-15103
8E0411318	AU-LS-3718
8E0411318 (-)	AU-SB-15103
8E0412377	AU-SB-9515
8E0419801B (-)	VO-AX-8291
8E0419801B (-)	VO-RK-15046
8E0419801B (-)	VO-RK-15049
8E0419801B (-)	VO-RK-15050
8E0419801B (-)	VO-RK-15064
8E0419801B (-)	VO-RK-15065
8E0419811	AU-ES-3839
8E0419811B	VO-ES-8227
8E0419831	K150139
8E0419831	K150142
8E0419831	K150232
8E0419831A	K150242
8E0422821	VO-AX-8291
8E0422821	VO-RK-15046
8E0422821	VO-RK-15049
8E0422821	VO-RK-15050
8E0422821	VO-RK-15064
8E0422821	VO-RK-15065
8E0422821C	VO-AX-8291
8E0422821C	VO-RK-15046
8E0422821C	VO-RK-15049
8E0422821C	VO-RK-15050
8E0422821C	VO-RK-15064
8E0422821C	VO-RK-15065
8E0501529G	AU-TC-7917
8E0501529K	AU-TC-7917
8E0501529P	AU-TC-7917
8E0501537M	AU-SB-5481
8E0501538F	AU-SB-5485
8E0505145AP	AU-SB-9037
8E0505145AR	AU-SB-9031
8E0505145F	VO-SB-13502
8E0505145M	VO-SB-13502
8E0505172A	VO-SB-13506
8E0505185C	VO-SB-13505
8E0505203D	AU-SB-5236
8E0505323M	VO-TC-13241
8E0505324M	VO-TC-13242
8E0505465AC	VO-LS-2271
8E0505465AF	VO-LS-2271
8E0505465C	AU-ES-3890
8E0505465D	AU-ES-3890
8E0505465E	AU-LS-3898
8E0505465G	AU-LS-3898
8E0505465K	VO-LS-2271
8E0505465T	VO-LS-2271
8E0511327A	VO-SB-14676

...AUDI	MOOG
8E0511327D	AU-SB-14731
8E0599257K	AU-SB-5635
8E0513353B	VO-SB-10062
8E0513353D	VO-SB-10062
8J0199231	AU-SB-7755
8J0407151D + Ball Joint	AU-TC-5196
8J0407151D + Ball Joint	AU-TC-5197
8J0407365	AU-BJ-5194
8J0407366	AU-BJ-5195
8J0423810	AU-AX-5193
8J0423811	AU-ES-5191
8J0423812	AU-ES-5192
8K0407151B	AU-TC-7437
8K0407151C	AU-TC-7437
8K0407151D	AU-TC-7437
8K0407151F	AU-TC-12623
8K0407151G	AU-TC-12623
8K0407152B	AU-TC-7438
8K0407152C	AU-TC-7438
8K0407152D	AU-TC-7438
8K0407152F	AU-TC-12624
8K0407152G	AU-TC-12624
8K0407182A	AU-SB-7439
8K0407182B	AU-SB-7439
8K0407183A	AU-SB-7441
8K0407183B	AU-SB-7441
8K0407183D	AU-SB-13832
8K0407505A	AU-TC-7352
8K0407505B	AU-TC-7881
8K0407505M	AU-TC-7881
8K0407505N	AU-TC-7352
8K0407506A	AU-TC-7353
8K0407506B	AU-TC-7882
8K0407506M	AU-TC-7882
8K0407506N	AU-TC-7353
8K0407509A	AU-TC-7355
8K0407509B	AU-TC-7883
8K0407509N	AU-TC-7355
8K0407510A	AU-TC-7356
8K0407510B	AU-TC-7884
8K0407510N	AU-TC-7356
8K0407515	AU-SB-7357
8K0407689D	AU-BJ-7440
8K0407689E	AU-BJ-7440
8K0407689F	AU-BJ-7440
8K0407689G	AU-BJ-7440
8K0407693F	AU-TC-8081
8K0407693K	AU-TC-8081
8K0407693N	AU-TC-8081
8K0407693S	AU-TC-10799
8K0407693T	AU-TC-10799
8K0407694F	AU-TC-8082
8K0407694K	AU-TC-8082
8K0407694N	AU-TC-8082
8K0407694S	AU-TC-10800
8K0407694T	AU-TC-10800

...AUDI	MOOG
8K0411317A	AU-LS-10678
8K0411317B	AU-LS-8044
8K0411317C	AU-LS-10678
8K0411317C	AU-LS-8351
8K0411317D	AU-LS-10678
8K0411317D	AU-LS-8351
8K0411317E	AU-LS-10678
8K0411317E	AU-LS-8351
8K0411327A	AU-SB-10798
8K0411327B	AU-SB-13386
8K0411327C	AU-SB-13742
8K0422817A	AU-ES-10907
8K0422817A	AU-ES-7377
8K0422817B	AU-ES-10907
8K0422817B	AU-ES-7377
8K0422818A	AU-ES-7378
8K0422818B	AU-ES-7378
8K0501529K	AU-TC-7373
8K0501529K (-)	AU-SB-12596
8K0501529N	AU-TC-7373
8K0501530K	AU-TC-7374
8K0501530K (-)	AU-SB-12596
8K0501530N	AU-TC-7374
8K0501541	AU-SB-12570
8K0505323D	AU-TC-7369
8K0505323F	AU-TC-7369
8K0505323F (-)	AU-SB-12570
8K0505323H	AU-TC-7369
8K0505323H (-)	AU-SB-12570
8K0505324D	AU-TC-7372
8K0505324F	AU-TC-7372
8K0505324F (-)	AU-SB-12570
8K0505324H	AU-TC-7372
8K0505324H (-)	AU-SB-12570
8K0505465E	AU-LS-7376
8K0505465E (-)	AU-SB-8107
8K0505465G	AU-LS-7376
8N0407151A	AU-TC-8869
8N0407151A	AU-WP-3948
8N0407151D	AU-TC-8869
8N0407151D	AU-WP-3948
8N0407152A	AU-TC-8870
8N0407152A	AU-WP-3949
8N0407152D	AU-TC-8870
8N0407152D	AU-WP-3949
8N0407181B	AU-SB-7331
8N0407182A	AU-SB-7256
8N0407365A	VO-BJ-2410
8N0407365B	VO-BJ-2410
8N0407365C	VO-BJ-2410
8N0422803A	AU-DS-0718
8N0422803A (-)	VO-AX-2409
8N0422803C	AU-DS-0718
8N0422804A	AU-DS-0717
8N0422804A (-)	VO-AX-2409
8N0422804C	AU-DS-0717

...AUDI	MOOG
8N0422807	VO-AX-2409
8N0422807D	AU-AX-6982
8N0422811A	VO-ES-2405
8N0422812	VO-ES-2404
8N0422812A	VO-ES-2404
8N0422831	K150182
8S0423810A	AU-AX-15387
8Z0407151J	VO-WP-2411
8Z0407152J	VO-WP-2412
8Z0407153L	VO-WP-2413
8Z0407153L	VO-WP-2414
8Z0407182B	AU-SB-3878
8Z0407182C	AU-SB-3878
8Z0407183A	AU-SB-3879
8Z0407365A	SK-BJ-0413
8Z0407366A	SK-BJ-0414
8Z0411314B	AU-SB-7436
8Z0411315B	VO-LS-2422
8Z0411315C	VO-LS-2422
8Z0411315D	VO-LS-0494
8Z0423803C (-)	VO-AX-2408
8Z0423804C (-)	VO-AX-2408
8Z0423811A	AU-ES-10890
8Z0423812A	AU-ES-10889
8Z0501541	AU-SB-8039
95533104530	AU-TC-14871
95533104532	AU-TC-14871
95VW3A262BA	VO-SB-1195
985407147A	VO-SB-1361
995533104531	AU-TC-14871
99634306903	VO-LS-13587
99634307002	VO-LS-10912
N10218708	SK-DS-3993
N90113701	VO-SB-10057

BMW	MOOG
1094933	K150090
1094933	K150092
2347982	BM-TC-14988
31100363476	BM-BJ-8826
31100363477	BM-TC-3862
31100363478	BM-TC-3863
31102348046	BM-TC-3687
31102348047	BM-TC-3686
31103363476	BM-BJ-8826
31103412135	BM-TC-3855
31103412136	BM-TC-3856
31103412137	BM-TC-3862
31103412138	BM-TC-3863
31103412726	BM-BJ-3861
31103415027	BM-TC-3855
31103415028	BM-TC-3856
31103418337	BM-TC-3855
31103418338	BM-TC-3856
31103418341	BM-BJ-3861
31103426433	BM-TC-3855

...BMW	MOOG
31103426434	BM-TC-3856
31103438623	BM-BJ-8826
31103443127	BM-TC-3862
31103443128	BM-TC-3863
31103451881	BM-TC-3855
31103451882	BM-TC-3856
31104026719	BM-TC-3686
31104026720	BM-TC-3687
31106770689	BM-TC-14987
31106770690	BM-TC-14988
31106771194	BM-SB-7402
31106771897	BM-SB-7401
31106778015	BM-SB-7406
31106786951	BM-SB-13380
31106786959	BM-SB-13426
31106787665	BM-BJ-13837
31106787673	BM-TC-13421
31106787674	BM-TC-13422
31106799960 (-)	BM-AX-10978
31109803662	BM-BJ-13445
31111096982	BM-SB-2232
31120006482	BM-SB-2433
31120302754	BM-SB-8773
31120304308	BM-SB-8773
31120305612	BM-SB-3689
31120307882	BM-SB-4412
31120360275	BM-TC-3855
31120393540	BM-SB-3734
31120398350	BM-SB-3734
31120410791	BM-SB-13492
31121092010	BM-SB-2213
31121092023	BM-TC-0477
31121092024	BM-TC-0476
31121092609	BM-WP-2430
31121092610	BM-WP-2431
31121092819	BM-WP-2430
31121092820	BM-WP-2431
31121093449	BM-TC-4357
31121093450	BM-TC-4356
31121094233	BM-TC-4357
31121094234	BM-TC-4356
31121094275	BM-TC-4369
31121094276	BM-TC-4368
31121094465	BM-WP-4738
31121094465	BM-WP-8861
31121094466	BM-WP-4739
31121094466	BM-WP-8862
31121096169	BM-TC-0920
31121096170	BM-TC-0918
31121096315	BM-TC-0898
31121096316	BM-TC-0897
31121096372	BM-SB-2429
31121096425	BM-BJ-0899
31121096685	BM-BJ-4346
31121096985	BM-WP-4738
31121096986	BM-WP-4739

...BMW	MOOG
31121113711	BM-DS-4332
31121124401	BM-TC-4217
31121124402	BM-TC-4218
31121124622	BM-SB-1591
31121124622	BM-SB-3688
31121124954	BM-TC-4223
31121124955	BM-TC-4224
31121125428	BM-SB-1775
31121125549	BM-TC-4223
31121125550	BM-TC-4224
31121125551	BM-TC-4223
31121125552	BM-TC-4224
31121126253	BM-BJ-4306
31121126254	BM-BJ-4307
31121126255	BM-SB-4381
31121126256	BM-SB-4382
31121126302	BM-SB-1775
31121127141	BM-TC-4223
31121127142	BM-TC-4224
31121127725	BM-TC-4367
31121127726	BM-TC-4366
31121129245	BM-TC-4223
31121129246	BM-TC-4224
31121130089	BM-TC-4317
31121130090	BM-TC-4318
31121130123	BM-SB-1135
31121130140	BM-SB-1135
31121130597	BM-TC-4317
31121130598	BM-TC-4318
31121131582	BM-TC-4218
31121131587	BM-TC-4217
31121131588	BM-TC-4218
31121132159	BM-DS-4332
31121132160	BM-DS-4333
31121132345	BM-TC-4223
31121132346	BM-TC-4224
31121132353	BM-TC-4223
31121132354	BM-TC-4224
31121133236	BM-SB-3688
31121133237	BM-TC-4371
31121133238	BM-TC-4370
31121133490	BM-TC-4318
31121133711	BM-DS-4332
31121133712	BM-DS-4333
31121135351	BM-SB-1128
31121135352	BM-SB-1128
31121136529	BM-TC-4369
31121136530	BM-TC-4368
31121136531	BM-SB-5013
31121136532	BM-SB-5014
31121136605	BM-SB-1122
31121136607	BM-SB-1133
31121137712	BM-DS-4333
31121139131	BM-BJ-4345
31121139987	BM-TC-4371
31121139988	BM-TC-4370

...BMW	MOOG
31121139991	BM-TC-4217
31121139992	BM-TC-4218
31121139999	BM-TC-4317
31121140000	BM-TC-4318
31121140398	BM-BJ-4346
31121140399	BM-TC-4369
31121140400	BM-TC-4368
31121140957	BM-TC-4369
31121140958	BM-TC-4368
31121141097	BM-DS-4332
31121141098	BM-DS-4333
31121141717	BM-TC-0477
31121141718	BM-TC-0476
31121141721	BM-TC-4362
31121141721	BM-TC-4363
31121141722	BM-TC-4362
31121141722	BM-TC-4363
31121141723	BM-TC-4363
31121141752	BM-SB-2433
31121141961	BM-TC-0924
31121141962	BM-TC-0923
31121142087	BM-TC-4361
31121142088	BM-TC-4360
3112141724	BM-TC-4362
31121701077	BM-BJ-4328
31122226581	BM-DS-4332
31122226582	BM-DS-4333
31122282121	BM-TC-5164
31122282122	BM-TC-5165
31122341828	BM-TC-5165
31122343352	BM-WP-4739
31122343352	BM-WP-8862
31122343353	BM-WP-4738
31122343353	BM-WP-8861
31122343358	BM-WP-4739
31122343358	BM-WP-8862
31122343359	BM-WP-4738
31122343359	BM-WP-8861
31122347963	BM-TC-3684
31122347965	BM-TC-3685
31122347981	BM-TC-14987
31122405860	BM-TC-3739
31124015707	BM-WP-1885
31124015708	BM-WP-1883
31124026453	BM-WP-2443
31124026454	BM-WP-2444
31124028607	BM-TC-3684
31124028608	BM-TC-3685
31124036269	BM-TC-3732
31124036270	BM-TC-3733
31124046437	BM-TC-3686
31124046438	BM-TC-3687
31124046439	BM-TC-5631
31124046440	BM-TC-5632
31124046441	BM-WP-2443
31124046441	BM-WP-2444

...BMW	MOOG
31124046442	BM-WP-2444
31124048627	BM-WP-5606
31124048628	BM-WP-5607
31124048628 (-)	BM-AX-5603
31124048629 (-)	BM-AX-5603
31124083309	BM-TC-13957
31124083310	BM-TC-13958
31124083311	BM-TC-12649
31124083312	BM-TC-12650
31126750223	BM-WP-4738
31126750224	BM-WP-4739
31126750519	BM-WP-2443
31126751317	BM-WP-4738
31126751318	BM-WP-4739
31126751318	BM-WP-8862
31126752317	BM-WP-4738
31126752317	BM-WP-8861
31126752318	BM-WP-4739
31126752318	BM-WP-8862
31126752717	BM-WP-4738
31126752717	BM-WP-8861
31126752718	BM-WP-4739
31126752718	BM-WP-8862
31126753989	BM-WP-1885
31126753990	BM-WP-1883
31126753991	BM-BJ-1881
31126753992	BM-BJ-1880
31126754899	BM-SB-13431
31126754899	BM-SB-2202
31126754899	BM-SB-8864
31126754900	BM-SB-13432
31126755835	BM-WP-2437
31126755836	BM-WP-2438
31126756101	BM-WP-2443
31126756102	BM-WP-2444
31126756309	BM-BJ-1882
31126756491	BM-BJ-0899
31126756695	BM-BJ-15221
31126756696	BM-BJ-15222
31126756989	BM-WP-1885
31126757511	BM-SB-2760
31126757561	BM-SB-7391
31126757562	BM-SB-7392
31126757623	BM-SB-2202
31126757623	BM-SB-8864
31126757623 (-)	BM-SB-0353
31126757623 (-)	BM-SB-8863
31126758220	BM-WP-4738
31126758220	BM-WP-8861
31126758510	BM-BJ-4346
31126758513	BM-TC-4369
31126758514	BM-TC-4368
31126758514	BM-TC-4369
31126758515	BM-TC-4369
31126758516	BM-TC-4368
31126758516	BM-TC-4369

...BMW	MOOG
31126758519	BM-WP-4738
31126758519	BM-WP-8861
31126758520	BM-WP-4739
31126758520	BM-WP-8862
31126760181	BM-TC-3684
31126760182	BM-TC-3685
31126760183	BM-TC-3686
31126760184	BM-TC-3687
31126760275	BM-TC-0898
31126760276	BM-TC-0897
31126760519	BM-WP-2443
31126760520	BM-WP-2444
31126761409	BM-WP-1885
31126761410	BM-WP-1883
31126763699	BM-TC-3738
31126763699 (-)	BM-SB-3737
31126763700	BM-TC-3739
31126763700 (-)	BM-SB-3737
31126763703	BM-TC-3732
31126763704	BM-TC-3733
31126763707	BM-TC-3732
31126763708	BM-TC-3733
31126763719	BM-SB-3734
31126765597	BM-SB-3737
31126765992	BM-SB-3689
31126765993	BM-WP-2443
31126765994	BM-WP-2444
31126765995	BM-TC-3686
31126765996	BM-TC-3687
31126765997	BM-TC-5631
31126765998	BM-TC-5632
31126767530	BM-SB-5608
31126767651	BM-SB-10783
31126768297	BM-TC-3684
31126768298	BM-TC-3685
31126768818	BM-SB-13492
31126768983	BM-TC-14531
31126768984	BM-TC-14532
31126768989	BM-TC-13687
31126768989 (-)	BM-SB-13688
31126769715	BM-SB-2429
31126769717	BM-TC-0920
31126769718	BM-TC-0918
31126769793	BM-TC-3738
31126769794	BM-TC-3739
31126769797	BM-TC-3732
31126769798	BM-TC-3733
31126769801	BM-TC-3732
31126769802	BM-TC-3733
31126770121	BM-WP-2437
31126770122	BM-WP-2438
31126770247	BM-WP-4738
31126770247	BM-WP-8861
31126770248	BM-WP-4739
31126770248	BM-WP-8862
31126770771	BM-WP-2437

...BMW	MOOG
31126770772	BM-WP-2438
31126770837	BM-WP-2437
31126770838	BM-WP-2438
31126770849	BM-TC-3738
31126770850	BM-TC-3739
31126771893	BM-TC-7389
31126771894	BM-TC-7390
31126772235	BM-SB-12600
31126772236	BM-SB-12599
31126772301	BM-WP-5606
31126772302	BM-WP-5607
31126772303	BM-BJ-5604
31126772304	BM-BJ-5605
31126772305	BM-BJ-10485
31126773949	BM-TC-7398
31126773950	BM-TC-7399
31126774819	BM-WP-4738
31126774819	BM-WP-8861
31126774820	BM-WP-4739
31126774820	BM-WP-8862
31126774825	BM-TC-3686
31126774826	BM-TC-3687
31126774827	BM-TC-14987
31126774828	BM-TC-14988
31126774829	BM-TC-5631
31126774830	BM-TC-5632
31126774831	BM-WP-2443
31126774831	BM-WP-2444
31126774832	BM-WP-2444
31126775959	BM-TC-12649
31126775960	BM-TC-12650
31126775963	BM-TC-13539
31126775964	BM-TC-13540
31126775967	BM-TC-13427
31126775967 (-)	BM-SB-13252
31126775971	BM-TC-10913
31126775971 (-)	BM-SB-10467
31126775972	BM-TC-10914
31126775972 (-)	BM-SB-10467
31126775979 (-)	BM-SB-10467
31126776417	BM-TC-8843
31126776417 (-)	BM-SB-8776
31126776418	BM-TC-8844
31126776418 (-)	BM-SB-8776
31126777733	BM-TC-13957
31126777734	BM-TC-13958
31126777743	BM-TC-14583
31126777744	BM-TC-14584
31126777753	BM-BJ-12620
31126777850	BM-SB-2202
31126777850	BM-SB-8864
31126777851	BM-WP-4738
31126777851	BM-WP-8861
31126777852	BM-WP-4739
31126777852	BM-WP-8862
31126777937	BM-WP-2437

...BMW	MOOG
31126777938	BM-WP-2438
31126777939	BM-WP-2437
31126777940	BM-WP-2438
31126779871	BM-TC-13459
31126779871 (-)	BM-SB-13252
31126779908	BM-TC-13458
31126783376	BM-SB-2202
31126783376	BM-SB-8864
31126787669	BM-TC-13339
31126787670	BM-TC-13340
31126791455	BM-SB-10916
31126794203	BM-TC-10917
31126794203 (-)	BM-SB-10915
31126794203 (-)	BM-SB-10916
31126794204	BM-TC-10918
31126794204 (-)	BM-SB-10915
31126794204 (-)	BM-SB-10916
31126798107	BM-TC-13539
31126798108	BM-TC-13540
31126850397 (-)	BM-SB-14878
31126850398 (-)	BM-SB-14878
31126850605	BM-TC-14583
31126850606	BM-TC-14584
31126851255	BM-SB-10983
31126851259	BM-TC-10921
31126852991	BM-TC-10923
31126852991 (-)	BM-SB-10984
31126852992	BM-TC-10924
31126852992 (-)	BM-SB-10984
31126854727	BM-TC-14067
31126854728	BM-TC-14068
31126854729	BM-SB-14569
31126855509	BM-SB-7401
31126855741	BM-TC-10921
31126855742	BM-TC-10922
31126855743	BM-SB-10983
31126864821	BM-TC-14899
31126864822	BM-TC-14900
31129058816	BM-SB-1775
31129058818	BM-SB-1775
31129058819	BM-SB-1775
31129058931	BM-SB-1135
31129059288	BM-SB-1128
31129068734	BM-SB-2433
31129068753	BM-SB-2213
31129069829	BM-SB-2433
31129071085	BM-SB-2433
31129803497	BM-SB-13447
31129803498	BM-SB-13448
31129803662	BM-SB-13446
31129803788	BM-SB-13446
31303404065	BM-SB-13400
31303413201	BM-LS-3859
31303413202	BM-LS-3860
31303414299	BM-LS-3859
31303414300	BM-LS-3860

...BMW	MOOG	...BMW	MOOG	...BMW	MOOG	...BMW	MOOG
31306758309	BM-SB-10960	31351126774	BM-SB-6707	31356778070	BM-LS-2434	32106858737 (-)	BM-AX-14892
31306781541	BM-LS-4429	31351127194	BM-LS-4322	31356780847	BM-LS-0434	32106858738	BM-ES-14894
31306781542	BM-LS-4430	31351127414	BM-SB-6707	31356857623	BM-LS-7343	32106863858	BM-ES-14893
31306781545	BM-LS-2435	31351127689	BM-LS-4311	31356857624	BM-LS-7344	32106863860	BM-ES-14894
31306781546	BM-LS-2434	31351128050	BM-LS-4322	31356859651	BM-LS-7343	32109805551	BM-ES-14905
31306781547	BM-LS-3675	31351128737	BM-LS-4311	31356859652	BM-LS-7344	32109805552	BM-ES-14906
31306781548	BM-LS-3676	31351130075	BM-LS-4322	31359806351	BM-LS-13597	32109808839	BM-ES-13441
31306781549	BM-LS-8769	31351131621	BM-SB-6765	31359806352	BM-LS-13598	32109808840	BM-ES-13442
31306781550	BM-LS-8768	31351132786	BM-SB-6765	32 10 6 774 318	BM-AX-15218	32111091767	BM-DS-4355
31306787163	BM-LS-13423	31351133738	BM-SB-6758	32 10 6 774 319	BM-AX-15218	32111091768	BM-DS-4354
31306787164	BM-LS-13424	31351134582	BM-LS-4322	32 10 6 867 404 (-)	BM-AX-14877	32111091769	BM-ES-4270
31306792211	BM-LS-10981	31351135805	BM-SB-6709	32 10 6 867 405 (-)	BM-AX-14877	32111091770	BM-ES-4279
31306792212	BM-LS-10982	3135128050	BM-LS-4322	32106765089	BM-ES-3728	32111093769	BM-DS-4355
31306862863	BM-LS-14782	31351507989	BM-LS-1886	32106765090	BM-ES-3729	32111093770	BM-DS-4354
31306862864	BM-LS-14876	31351701066	BM-DS-4329	32106765235	BM-AX-3731	32111093771	BM-ES-4375
31331090467	BM-SB-9556	31352227203	BM-LS-5198	32106765236	BM-AX-3731	32111094673	BM-DS-4355
31331090611	BM-SB-9550	31354014531	BM-LS-3675	32106765782	K150237	32111094673 (-)	BM-AX-1843
31331090612	BM-SB-9550	31354014532	BM-LS-3676	32106767781	BM-ES-3728	32111094673 (-)	BM-RK-15011
31331090612	BM-SB-9554	31354014575	BM-LS-4429	32106767782	BM-ES-3729	32111094674	BM-DS-4354
31331091708	BM-SB-9573	31354014576	BM-LS-4430	32106769073	BM-ES-8883	32111094674 (-)	BM-AX-1843
31331091709	BM-SB-9571	31356750703	BM-LS-2115	32106769074	BM-ES-8884	32111094674 (-)	BM-RK-15011
31331092885	BM-SB-9556	31356750704	BM-LS-2116	32106774220	BM-ES-0491	32111096897	BM-DS-3583
31331094616	BM-SB-9571	31356751079	BM-LS-4195	32106774221	BM-ES-0490	32111109673	BM-DS-4355
31331096311	BM-SB-9554	31356751080	BM-LS-4196	32106774222	BM-DS-3583	32111109674	BM-DS-4354
31331124508	BM-SB-9560	31356753767	BM-LS-2435	32106774223	BM-DS-1788	32111116068	K150027
31331135582	BM-SB-9556	31356753768	BM-LS-2434	32106774321	BM-ES-15220	32111117426	K150027
31331139452	BM-SB-9560	31356753928	BM-SB-3678	32106774335	BM-ES-4876	32111125186	BM-DS-4301
31332227897	BM-SB-9566	31356757069	BM-SB-13382	32106774336	BM-DS-2114	32111125187	BM-DS-4304
31332227898	BM-SB-9565	31356757146	BM-SB-7217	32106774361	BM-ES-2439	32111126620	BM-AX-4305
31336752735	BM-SB-9571	31356758302	BM-SB-13383	32106776946	BM-ES-2439	32111126757	BM-ES-4302
31336753966	BM-SB-9548	31356759537	BM-LS-1887	32106777268	BM-AX-2436	32111127104	K150027
31336759498	BM-SB-9531	31356760985	BM-LS-3675	32106777479	BM-AX-3683	32111127124	BM-AX-4303
31336779612	BM-SB-10961	31356760986	BM-LS-3676	32106777503	BM-DS-3583	32111130449	BM-AX-4303
3135095694	BM-LS-0434	31356761591	BM-SB-3678	32106777504	BM-DS-1788	32111130451	BM-AX-4305
31351090186	BM-SB-6752	31356762511	BM-LS-4429	32106778437	BM-ES-5601	32111139313	BM-ES-4341
31351090263	BM-SB-6754	31356762512	BM-LS-4430	32106778438	BM-ES-5602	32111139314	BM-ES-4344
31351090860	BM-SB-6753	31356763267	BM-SB-3678	32106780984	BM-ES-5621	32111139315	BM-DS-4339
31351091228	BM-SB-6753	31356764113	BM-SB-3678	32106784716	BM-AX-8789	32111139316	BM-DS-4340
31351091496	BM-DS-4364	31356765574	BM-SB-3724	32106784719	BM-AX-8789	32111139317	BM-DS-4339
31351091764	BM-LS-4311	31356765933	BM-LS-3725	32106784790	BM-ES-10441	32111139318	BM-DS-4343
31351091855	BM-DS-4359	31356765934	BM-LS-3727	32106784796	BM-ES-10442	32111139318 (-)	BM-AX-0359
31351091856	BM-DS-4358	31356766509	BM-SB-3678	32106787472 (-)	BM-AX-13425	32111191767 (-)	BM-AX-1843
31351092304	BM-LS-0420	31356768083	BM-LS-8769	32106792029 (-)	BM-AX-13875	32111191767 (-)	BM-RK-15011
31351093108	BM-SB-6759	31356768084	BM-LS-8768	32106792030 (-)	BM-AX-13875	32111191768 (-)	BM-AX-1843
31351094145	BM-SB-6760	31356768771	BM-LS-14585	32106792674	BM-ES-13420	32111191768 (-)	BM-RK-15011
31351094554	BM-SB-13491	31356768772	BM-LS-14586	32106793497	BM-ES-5621	321167545634 (-)	BM-AX-1877
31351094556	BM-SB-13495	31356769499	BM-LS-3675	32106793621 (-)	BM-AX-8885	32116761560	BM-ES-6986
31351095271	BM-SB-6757	31356769500	BM-LS-3676	32106793623	BM-ES-8883	32130396405	K150252
31351095661	BM-DS-4359	31356769663	BM-LS-4429	32106793624	BM-ES-8884	32131092876	K150090
31351095662	BM-DS-4358	31356769664	BM-LS-4430	32106797617	BM-ES-14065	32131092876	K150091
31351095664	BM-LS-0420	31356772843	BM-SB-12540	32106797618	BM-ES-14066	32131096465	K150158
31351095694	BM-LS-0434	31356772844	BM-SB-13384	32106799966	BM-ES-10979	32131096910	K150090
31351095695	BM-DS-4364	31356773023	BM-LS-7343	32106799967	BM-ES-10980	32131096910	K150092
31351097021	BM-SB-7210	31356773024	BM-LS-7344	32106854734	BM-ES-14787	32131096910	K150163
31351097179	BM-SB-13490	31356777319	BM-LS-8806	32106858735 (-)	BM-AX-14892	32136751026	K150252
31351124380	BM-LS-4322	31356778069	BM-LS-2435	32106858736	BM-ES-14893	32136752478	K150162

...BMW	MOOG
32136753546	K150223
32136761559	BM-ES-6983
32211091723	BM-ES-4375
32211091724	BM-ES-4374
32211091913	BM-DS-4349
32211091917	BM-DS-4349
32211093433	BM-DS-4349
32211094673	BM-DS-4355
32211094674	BM-DS-4354
32211095955	BM-AX-4342
32211095955	BM-RK-15012
32211095956	BM-DS-1788
32211095957	BM-ES-0491
32211095958	BM-ES-0490
32211096057	BM-DS-4349
32211096327	BM-ES-2113
32211096898	BM-DS-1788
32211114842	ME-ES-0212
32211123881	BM-TC-7991
32211124231	BM-DS-4214
32211124232	BM-DS-4226
32211124906	BM-DS-4226
32211127136	BM-DS-4226
32211127272	BM-DS-4226
32211127917	BM-ES-4215
32211127918	BM-ES-4216
32211129014	BM-DS-4226
32211129020	BM-DS-4214
32211129051	BM-TC-7991
32211129807	BM-SB-4477
32211129978	BM-TC-7991
32211130001	BM-ES-4216
32211130004	BM-ES-4215
32211130655	BM-DS-4315
32211130658	BM-DS-4316
32211130661	BM-DS-4331
32211131067	BM-TC-7991
32211133525	BM-DS-4315
32211133528	BM-DS-4316
32211133615	BM-DS-4331
32211133698	BM-SB-4477
32211133699	BM-TC-7991
32211135666	BM-DS-4214
32211135819	BM-ES-4216
32211135820	BM-ES-4215
32211136450	BM-TC-7991
32211136452	BM-SB-4477
32211136681	BM-DS-4315
32211136682	BM-DS-4316
32211136683	BM-DS-4334
32211136685	BM-DS-4331
32211138850	BM-DS-4315
32211138851	BM-DS-4316
32211138852	BM-DS-4334
32211138854	BM-DS-4331
32211138864	BM-DS-4331

...BMW	MOOG
32211139786	K150090
32211139786	K150092
32211141345	BM-ES-4350
32211141346	BM-ES-4351
32211701038	BM-ES-4326
32216751277	BM-DS-2114
32216751277 (-)	BM-AX-2426
32216754565	BM-ES-1874
32216754566	BM-ES-1871
32216756368 (-)	BM-AX-2436
32216756369	BM-ES-2439
32216760354	BM-ES-2113
32216760354	BM-ES-4876
32216760470	BM-DS-2114
32216762243	BM-AX-3730
32216762243	BM-RK-15072
32216762403	BM-AX-3683
32216767860	BM-ES-6593
32216773739	BM-ES-5621
32216773741 (-)	BM-AX-5622
32221096897	BM-DS-3583
32303418202	BM-ES-3857
32413413476	BM-ES-3857
33111093772	BM-ES-4374
33171093008	BM-SB-4510
33171093175	BM-SB-4534
33171096207	BM-SB-14610
33171124373	BM-SB-4499
33171128586	BM-SB-4499
33171130874	BM-SB-1750
33171131245	BM-SB-2425
33171131903	BM-SB-1750
33171135242	BM-SB-4499
33176760287	BM-SB-8754
33176760288	BM-SB-13489
33176770456	BM-SB-14610
33176770788	BM-SB-4534
33176770866	BM-SB-13489
33303411651	BM-TC-3936
33306773941	BM-TC-3692
33306773942	BM-TC-3693
33306786980	BM-SB-14636
33306786991	BM-TC-14660
33306786991 (-)	BM-SB-14999
33306786994	BM-SB-14999
33311090946	BM-SB-4453
33311090956	BM-SB-3614
33311091422	BM-SB-7948
33311092515	BM-SB-4521
33311092516	BM-SB-4522
33311092517	BM-SB-4524
33311093662	BM-SB-7946
33311094036	BM-SB-10728
33311127533	BM-SB-4480
33311128670	BM-SB-4194
33311129760	BM-SB-4194

...BMW	MOOG
33311130488	BM-SB-4480
33313418342	BM-SB-8046
33316757393	BM-SB-4521
33316757394	BM-SB-4522
33316758260	BM-SB-8755
33316770454	BM-SB-7946
33316770781	BM-SB-4524
33316770783	BM-SB-4521
33316770784	BM-SB-4522
33316775780	BM-SB-10457
33316775792	BM-SB-10456
33316790573	BM-SB-10457
33316792509	BM-SB-10994
33316792513	BM-SB-10996
33316793864	BM-SB-10456
33319059300	BM-SB-3966
33319059301	BM-SB-8757
33320300946	BM-TC-3691
33320398361	BM-TC-3691
33320403294	BM-TC-3691
33320414345	BM-TC-3691
33320421750	BM-TC-3691
33321090030	BM-TC-0928
33321090102	BM-SB-2200
33321090504	BM-SB-3694
33321090745	BM-TC-0486
33321090815	BM-TC-0449
33321090816	BM-TC-0448
33321090905	BM-TC-1752
33321090906	BM-TC-3152
33321091620	BM-TC-0928
33321091620 (-)	BM-SB-8108
33321091620 (-)	BM-SB-8109
33321092237	BM-TC-3936
33321092247	BM-SB-3978
33321092248	BM-SB-4495
33321094209	BM-SB-2201
33321095411	BM-TC-2122
33321095412	BM-TC-2125
33321095414	BM-TC-2118
33321095631	BM-SB-3694
33321096 (-)	BM-SB-3695
33321096797	BM-TC-3691
33321097 (-)	BM-SB-3695
33321097009	BM-SB-8339
33321097264	BM-TC-0486
33321110115	BM-SB-5344
33321117259	BM-SB-5344
33321123463	BM-DS-4225
33321123774	BM-SB-5344
33321125665	BM-DS-4225
33321126476	BM-DS-4225
33321136311	BM-SB-4483
33321137564	BM-SB-5344
33321137571	BM-SB-3978
33321137806	BM-SB-8339

...BMW	MOOG
33321138380	BM-TC-3936
33321138383	BM-SB-4495
33321138722	BM-SB-4842
33321140345	BM-SB-4842
33321490085 (-)	BM-SB-12543
33322228153	BM-SB-14614
33322282065	BM-TC-3691
33324046917	BM-TC-10489
33324046918	BM-TC-10490
33324069283	BM-TC-10465
33324069283 (-)	BM-SB-10462
33324069283 (-)	BM-SB-10463
33324069284	BM-TC-10466
33324069284 (-)	BM-SB-10462
33324069284 (-)	BM-SB-10463
33324069469	BM-TC-13584
33326750371	BM-SB-3694
33326756249	BM-SB-5625
33326757885	BM-SB-14614
33326760054 (-)	BM-SB-12543
33326760675	BM-TC-3936
33326763092	BM-SB-7445
33326763093	BM-SB-8753
33326763324	BM-TC-3691
33326763471	BM-TC-3742
33326763473	BM-TC-3741
33326765425	BM-TC-3740
33326765425S1	BM-RK-8974
33326765534	BM-SB-7885
33326765535	BM-SB-8752
33326767206 (-)	BM-SB-12543
33326767748	BM-SB-3694
33326767753	BM-TC-3692
33326767754	BM-TC-3693
33326767831	BM-TC-0449
33326767832	BM-TC-0448
33326767967	BM-TC-3692
33326767968	BM-TC-3693
33326768268	BM-TC-3691
33326768269	BM-TC-2118
33326768273	BM-TC-2122
33326768274	BM-TC-2125
33326768726 (-)	BM-SB-12543
33326768789	BM-TC-3692
33326768789 (-)	BM-SB-5645
33326768790	BM-TC-3693
33326768790 (-)	BM-SB-5645
33326768791	BM-TC-0486
33326769020 (-)	BM-SB-12543
33326769023 (-)	BM-SB-12543
33326770059	BM-TC-1752
33326770060	BM-TC-3152
33326770742	BM-TC-2118
33326770747	BM-TC-2122
33326770748	BM-TC-2125
33326770749	BM-TC-0928

...BMW	MOOG
33326770753	BM-TC-3691
33326770786	BM-SB-8339
33326770813	BM-TC-3936
33326770817	BM-SB-14614
33326770824	BM-SB-4495
33326770829	BM-SB-8753
33326770859	BM-TC-2122
33326770860	BM-TC-2125
33326770963	BM-TC-10489
33326770964	BM-TC-10490
33326770969	BM-TC-10487
33326770969 (-)	BM-SB-13951
33326770970	BM-TC-10488
33326770970 (-)	BM-SB-13951
33326770985	BM-BJ-8777
33326771828	BM-SB-4483
33326774476	BM-TC-10491
33326774795	BM-TC-3691
33326774796	BM-TC-2118
33326774796 (-)	BM-SB-2427
33326775551	BM-SB-4842
33326775552	BM-SB-5625
33326775683	BM-TC-10460
33326775683 (-)	BM-SB-13722
33326775683 (-)	BM-SB-13723
33326775902	BM-TC-10464
33326775902 (-)	BM-SB-10461
333267763471 (-)	BM-SB-7445
33326777424	BM-TC-3691
33326777425	BM-TC-3692
33326777426	BM-TC-3693
33326777980	BM-TC-3741
33326777980S1	BM-RK-8974
33326779387	BM-TC-10489
33326779387 (-)	BM-SB-13952
33326779388	BM-TC-10490
33326779388 (-)	BM-SB-13952
33326779847	BM-TC-13585
33326779848	BM-TC-13586
33326779851	BM-TC-13584
33326780438	BM-BJ-10455
33326782135	BM-TC-10465
33326782136	BM-TC-10466
33326782168	BM-TC-13747
33326786978	BM-TC-14635
33326790493	BM-SB-13966
33326792533 (-)	BM-SB-14873
33326792539	BM-TC-10985
33326792539 (-)	BM-SB-14970
33326792540	BM-TC-10986
33326792540 (-)	BM-SB-14970
33326792541 (-)	BM-SB-14989
33326792543	BM-TC-10987
33326792543 (-)	BM-SB-14968
33326792544	BM-TC-10988
33326792544 (-)	BM-SB-14968

...BMW	MOOG
33326795812	BM-TC-14634
33329058821	BM-SB-5344
33329061945	BM-SB-5344
33356792196	BM-SB-10992
33356792197	BM-SB-15100
33503404616	BM-SB-14609
33503413197	BM-LS-3858
33503414297	BM-LS-3858
33506768493	BM-LS-13493
33506772789	BM-LS-5609
33506781537	BM-LS-13493
33506781538	BM-LS-8774
33506781539	BM-LS-3967
33506781540	BM-LS-3690
33506785607	BM-LS-10919
33506785608	BM-LS-10920
33506862865	BM-LS-14888
33509803515	BM-LS-13449
33509803516	BM-LS-13450
33521091238	BM-SB-9525
33521091710	BM-SB-9529
33521092362	BM-SB-9562
33521094091	BM-SB-9525
33521097272	BM-SB-9546
33521128734	BM-SB-9562
33521128819	BM-SB-9564
33521132104	BM-SB-9564
33521132270	BM-SB-9557
33521137972	BM-SB-9564
33526754096	BM-SB-9562
33526754123	BM-SB-9533
33536765584	BM-SB-6855
33551091497	BM-DS-4365
33551092292	BM-LS-0485
33551093663	BM-SB-7913
33551094551	BM-SB-14615
33551094619	BM-LS-0433
33551095532	BM-LS-0485
33551095535	BM-LS-0485
33551095696	BM-DS-4365
33551096735	BM-LS-2117
33551096893	BM-SB-13494
33551124375	BM-LS-1151
33551126932	BM-LS-1151
33551129700	BM-SB-6756
33551131131	BM-LS-1787
33551131155	BM-SB-6762
33551135307	BM-LS-1787
33551136491	BM-SB-6738
33551138104	BM-SB-6804
33551507999	BM-LS-1890
33551526932	BM-LS-1151
33552282182	BM-LS-8778
33552283743	BM-LS-8778
33556751269	BM-SB-14613
33556753770	BM-LS-3967

...BMW	MOOG
33556754823	BM-SB-12541
33556756151	BM-SB-7216
33556757460	BM-LS-8774
33556761000	BM-LS-3690
33556761001	BM-SB-15245
33556761002	BM-SB-6856
33556761360	BM-SB-14582
33556761492	BM-LS-13493
33556761568	BM-SB-15246
33556764428	BM-LS-3743
33556764428 (-)	BM-SB-8981
33556766510	BM-SB-13508
33556771937	BM-LS-7313
33556772082	BM-SB-14611
33556772788	BM-SB-13385
33556777635	BM-LS-8845
33556786429	BM-LS-10438
33556788058	BM-SB-14666
33556788063	BM-SB-14665
33556788630	BM-SB-15109
33556788861	BM-SB-14599
33556790324	BM-LS-13956
33556797888	BM-SB-15106
33556857626	BM-LS-7313
34526778469	BM-TC-3741
37106775189	BM-LS-8846
37116771929	BM-LS-7314
37116771930	BM-LS-7315
37116857627	BM-LS-7314
37116857628	BM-LS-7315
37116859653	BM-LS-7314
37116859654	BM-LS-7315

CHEVROLET	MOOG
13219090	OP-SB-8420
13219141	OP-LS-8349
13258052	OP-LS-7446
13272605	OP-TC-10115
13272606	OP-TC-10116
13278358	OP-AX-10486
13278359	OP-ES-7415
13286686	OP-ES-7415
13286687	OP-AX-8848
13286688	OP-AX-13452
13313749	OP-TC-10115
13313750	OP-TC-10116
13321342	OP-SB-8420
13334021	OP-SB-10570
13334022	OP-TC-10115
13334023	OP-TC-10116
13396771	OP-ES-7415
13398595	OP-AX-13452
15293924	OP-BJ-4745
1603148	OP-LS-2018
1609026	OP-ES-7415
1609203	OP-ES-13924

...CHEVROLET	MOOG
22744118	OP-LS-4707
22744119	OP-LS-4706
242000	OP-SB-9716
350617	OP-LS-8349
350618	OP-LS-7446
352108	OP-SB-10570
352110	OP-TC-10115
352115	OP-TC-10116
352338	OP-SB-1292
352492	OP-TC-10115
352493	OP-TC-10116
352494	OP-SB-10570
352523 (-)	OP-SB-14711
352523 (-)	OP-SB-14712
352524 (-)	OP-SB-14711
352524 (-)	OP-SB-14712
352866	OP-SB-8420
4443003011	DE-BJ-2863
4450505001	DE-BJ-2865
4475005001	DE-LS-2862
4520083E00	OP-TC-3619
45200A70B00	DE-TC-0125
45200A70B000	DE-TC-0125
4666005501	DE-ES-2861
4803429	OP-ES-4746
4804642	OP-LS-7224
4806300	OP-WP-7222
4806300 (-)	OP-BJ-4745
4806301	OP-WP-7223
4806304	OP-LS-4707
4806305	OP-LS-4706
4810831	OP-WP-7222
4812870	OP-WP-7223
4817777	OP-WP-7222
48810A78B00	DE-ES-0126
48810A78B00000	DE-ES-0639
48830A78B00	DE-DS-0127
5104075AA	AMGK7455
520672	DE-AX-5636
520738	K150171
520808	DE-AX-2479
520838	DE-AX-1821
520838	DE-AX-5636
520898	DE-AX-2479
521136	DE-ES-0126
521136	DE-ES-0639
521255	DE-AX-1822
521257	DE-AX-1773
521564	DE-AX-2470
576242000	OP-SB-9716
7848281	OP-DS-5376
90184755	OP-SB-9716
90184756	OP-SB-9716
90235040	OP-SB-1644
90289557	OP-SB-9716
920007	OP-AX-10486

...CHEVROLET	MOOG
920011	OP-ES-13924
92119830	DE-BJ-5422
9223176	OP-SB-8962
93740621	DE-AX-2470
93740622	DE-ES-2475
93740622	DE-ES-3893
93740623	DE-ES-2476
93740623	DE-ES-3894
93740701	DE-AX-8886
93740710	DE-ES-0634
93740710	DE-ES-7242
93740722	DE-ES-2475
93740722	DE-ES-3893
93740723	DE-ES-2476
93740723	DE-ES-3894
93741077	DE-ES-0126
94540668	OP-WP-14709
94540669	OP-WP-14710
95025705	OP-WP-14710
95025706	OP-WP-14709
95032440	DE-WP-10653
95032441	DE-WP-10654
95479763	DE-SB-7240
95488870	OP-LS-4707
95488871	OP-LS-4706
95914910	OP-ES-13924
95915222	OP-ES-13924
95942519	OP-LS-13685
95942520	OP-LS-13686
95947829	DE-LS-10623
95952782	DE-WP-10653
95952782 (-)	DE-BJ-10655
95952782 (-)	DE-SB-10656
95952782 (-)	DE-SB-10657
95952783	DE-WP-10654
95952783 (-)	DE-BJ-10655
95952783 (-)	DE-SB-10656
95952783 (-)	DE-SB-10657
95952929	OP-AX-13418
95952930	DE-AX-5752
95954754 (-)	OP-AX-7221
95967285	DE-ES-10621
95967294	DE-AX-10652
95994977	DE-LS-2299
96129753	DE-ES-0634
961316765	DE-TC-0125
96207628	DE-LS-8809
96213119	DE-BJ-0636
96225858	DE-LS-5136
96225859	DE-LS-5135
96261099	DE-WP-5637
96261100	DE-WP-5638
96261108	DE-BJ-2473
96261378	DE-ES-2471
96261379	DE-ES-2472
96268438	DE-WP-0631

...CHEVROLET	MOOG
96268438 (-)	DE-SB-4848
96268438 (-)	DE-SB-4849
96268439	DE-WP-0630
96268439 (-)	DE-SB-4848
96268439 (-)	DE-SB-4849
96268454	OP-WP-0836
96268455	OP-WP-0833
96275018	OP-ES-5377
96300048	DE-BJ-0633
96300222	DE-LS-3271
96316765	DE-TC-0125
96322618	DE-SB-13996
96328434	DE-SB-10821
96328437	DE-BJ-5422
96378346	DE-SB-5775
96378347	DE-WP-5637
96378348	DE-WP-5638
96380586	SZ-SB-2960
96380613	OP-SB-1386
96388640	DE-SB-8905
96388641	DE-SB-8906
96391850	DE-WP-4419
96391851	DE-WP-4420
96391856	DE-SB-7241
96391875	DE-LS-2299
96391875	OP-DS-0750
96391876	OP-DS-0750
96394930	DE-SB-14703
96403099	DE-LS-3897
96403100	DE-LS-3896
96407485	DE-ES-3968
96407486	DE-ES-3969
96407755	DE-SB-14618
96415063	DE-WP-4419
96415064	DE-WP-4420
96423220	DE-WP-5637
96423324	DE-WP-5638
96434540	DE-SB-14056
96434543	DE-SB-14618
96435292	DE-SB-13953
96435295	DE-SB-13953
96445783	DE-BJ-5422
96454146	DE-SB-14703
96456713	DE-SB-9726
96456715	DE-SB-9726
96474040	DE-SB-14056
96474043	DE-SB-14618
96475985	DE-SB-14703
96490218	DE-BJ-3970
96535010	DE-SB-9724
96535011	DE-SB-9724
96535081	DE-WP-2477
96535081 (-)	DE-SB-7239
96535081 (-)	DE-SB-7240
96535082	DE-WP-2478
96535082 (-)	DE-SB-7239

...CHEVROLET	MOOG
96535082 (-)	DE-SB-7240
96535087	DE-SB-7239
96535088	DE-SB-7240
96535089	DE-BJ-2469
96535095	DE-SB-13953
96535166	DE-SB-9726
96535300	DE-AX-2474
96549923	DE-SB-14056
96561754	DE-LS-3971
96611265	DE-TC-0125
96626150	OP-LS-7224
96626235	OP-WP-7222
96626236	OP-WP-7223
96626247	OP-LS-4707
96626248	OP-LS-4706
96626667	OP-ES-4746
96639904	DE-LS-8903
96639905	DE-LS-8904
96639910	DE-LS-10435
96653351	DE-SB-13953
96653381	DE-SB-7240
96804650	DE-SB-13953
96810751	OP-SB-10445
96810753	OP-WP-7222
96810754	OP-WP-7223
96815893	DE-WP-2477
96815893D	DE-WP-2477
96815894	DE-WP-2478
96819161	OP-WP-7222
96819161 (-)	OP-SB-8779
96819161 (-)	OP-SB-8780
96819162	OP-WP-7223
96819162 (-)	OP-SB-8779
96819162 (-)	OP-SB-8780
96839848	DE-SB-14056
96852964	OP-BJ-4745
96859498	DE-SB-14703
96870461	DE-SB-13953
96870465	DE-WP-2477
96870466	DE-WP-2478
96933805	DE-SB-14618
96941966	DE-SB-14618
96970074	DE-SB-8905
96970075	DE-SB-8906
96996450	OP-LS-4707
96996451	OP-LS-4706
96996460	OP-LS-7224
KBJ029	DE-ES-0452
KBJR45	DE-AX-0447
KRSL18	K150052

CHRYSLER	MOOG
04656932AA	CH-SB-10807
04694760C	CH-WP-2447
0487487AB	AMGEV362
05104075AA	AMGK7455

...CHRYSLER	MOOG
05133904AA	K150127
05139559AA	AMGK7455
05183761AD	FI-ES-10933
05272526AA	CH-SB-10808
175422831	K150029
4322620	CH-SB-9576
4333450	AMGEV128
4404976	CH-SB-9576
4449553	CH-BJ-0315
4509774	CH-WP-3299
4509775	CH-WP-3298
4656010	AMGK7147
4656010AD	AMGK7147
4656010AE	AMGK7147
4656012AB	CH-SB-2457
4656012AC	CH-SB-2457
4656012AD	CH-SB-2457
4656012AF	CH-SB-2457
4656013	CH-SB-2456
4656730AD	CH-WP-2459
4656730AH	CH-WP-2459
4656730AL	CH-WP-2459
4656730AN	CH-WP-2459
4656731AH	CH-WP-2458
4656731AL	CH-WP-2458
4656731AN	CH-WP-2458
4656932AA	CH-SB-10807
4656934AB	CH-LS-10579
4684005	CH-SB-9576
4684006	CH-SB-9576
4684120	AMGK7286
4684129	CH-SB-9583
4684418	CH-SB-9583
4684548	CH-SB-2446
4684643	CH-SB-9576
4684678	CH-SB-9576
4694760	CH-WP-2447
4694761	CH-WP-2445
4694761C	CH-WP-2445
4694855	CH-LS-10691
4694870	CH-SB-9583
47430044AA	AMGK7374
4743021AA	CH-LS-10691
4743094AA	CH-SB-2453
4743095AA	CH-SB-2452
4743142AD	AMGEV405
4743376AA	CH-BJ-15434
4743454AB	CH-LS-10691
4743454AC	CH-LS-10691
4743669AA	CH-LS-10691
4743669AB	CH-LS-10691
4743669AC	CH-LS-10691
4762861	CH-ES-0313
4762861AA	CH-ES-0313
4766116AA	AMGK7374
476616AA	AMGK7374

...CHRYSLER	MOOG
4766542AA	CH-WP-2450
4766543AA	CH-WP-2449
4797706	CH-ES-15604
5098996AA	ME-DS-4175
5099237AA	ME-BJ-6331
5133904AA	K150127
5139559AA	AMGK7455
5168158AA (-)	CH-SB-14092
5168159AA (-)	CH-SB-14092
5183761AB	FI-ES-10933
5183761AD	FI-ES-10933
52001090	AMGK3160
52001145	AMGK3160
52005741	CH-ES-7921
52006289	AMGK3160
52037649	CH-AX-0314
52088319AB	CH-LS-13707
52090206AI	CH-TC-13394
52090206AI (-)	CH-SB-13395
5272084	CH-SB-2448
5272084	CH-SB-2454
5272098	CH-SB-2455
5272190	AMGK7301
5272226	AMGK7375
5272226	AMGK7457
5272227	AMGK7457
5272324AB	AMGK7348
5272500AE	AMGEV404
5273731AB	CH-SB-14074
68012176AA	ME-SB-5620
68022614AA	CH-SB-14092
68033171AA	CH-ES-10748
68033171AB	CH-ES-10748
68141058AA	FI-ES-10933
MB242358	MI-SB-9934
MB338620	MI-SB-9934

CITROËN	MOOG
12613956K6578	PE-SB-1300
1300473080	FI-BJ-7531
1302368080	FI-BJ-7530
1304641080	CI-SB-7967
1305551080	PE-SB-1311
1305552080	PE-SB-1313
1308600080	FI-WP-0109
1308601080	FI-WP-0108
1308759080	FI-WP-0111
1308760080	FI-WP-0110
1313084080	FI-TC-8872
1316735080	FI-TC-8871
1316736080	FI-TC-8872
1317389080	FI-TC-8871
1317390080	FI-TC-8872
1317425080S	PE-LS-1048
1331640080	FI-BJ-0512
1331641080	FI-BJ-0513

...CITROËN	MOOG
1357572080	CI-LS-7321
1479759080	CI-SB-4473
1607301380	CI-WP-3877
1607301480	CI-WP-3876
1607502480	MI-ES-10840
1607510680	PE-TC-8483
1607510780	PE-TC-8482
1608025180	PE-ES-12631
1608025280	PE-ES-12632
1608025380	PE-AX-12630
1608388580	CI-SB-14829
1608532180	PE-AX-13279
1608652180	CI-AX-13643
1608652280	CI-ES-13641
1608652380	CI-ES-13642
1609910680	PE-SB-7430
1609948280	CI-ES-8465
1609948380	CI-ES-8466
1610817680	CI-AX-14830
1610817780	CI-ES-13989
1610817880	CI-ES-13990
1610976380	CI-ES-5120
1610976480	CI-ES-5119
1611242380	PE-AX-14704
1614439280	PE-BJ-3356
1614447180	PE-WP-13404
322054	PE-TC-5034
3250N3	FI-WP-0109
350438	CI-SB-10866
352010	CI-TC-3341
352020	CI-TC-3342
352049	PE-TC-3198
352050	PE-TC-3198
352051	OP-TC-1955
352054	PE-TC-5034
352060	PE-TC-3197
352064	PE-WP-0577
352065	PE-TC-0076
352067	OP-BJ-4870
352068	PE-TC-0076
352070	PE-TC-1035
352071	PE-TC-1036
352076	PE-TC-5038
352077	PE-TC-5040
352078	PE-WP-6980
352079	PE-WP-6979
352080	PE-WP-0626
352081	PE-WP-0627
352086	CI-TC-0160
352087	OP-BJ-4870
352092	PE-WP-0626
352093	PE-WP-0627
352094	FI-TC-8871
352095	FI-WP-0109
352096	FI-WP-0111
3520A1	CI-WP-13401

...CITROËN	MOOG
3520A2	CI-WP-13401
3520A3	CI-WP-13401
3520A4	CI-WP-13401
3520A5	CI-WP-13401
3520A6	PE-TC-0078
3520C0	PE-TC-0218
3520C0	PE-TC-8875
3520C1	CI-TC-0160
3520C2	CI-TC-0160
3520C3	FI-TC-8871
3520C5	FI-TC-8871
3520C5 (-)	PE-SB-1311
3520F7	CI-WP-13401
3520F8	CI-WP-13401
3520G8	PE-TC-1572
3520G9	FI-TC-8871
3520H3	PE-WP-13403
3520H3	PE-WP-13407
3520H4	CI-WP-0601
3520H5	CI-WP-0601
3520H5	CI-WP-13401
3520H6	CI-WP-0601
3520H7	PE-TC-1033
3520H8	CI-WP-0601
3520H9	CI-WP-0713
3520J3	CI-WP-0713
3520J4	CI-WP-0713
3520J9	CI-WP-0713
3520K3	CI-TC-2056
3520K6	PE-TC-1035
3520K8	PE-TC-1032
3520K9	CI-WP-0713
3520L0	FI-WP-0109
3520L0	FI-WP-3840
3520L1	CI-WP-3876
3520L1	FI-WP-0111
3520L3	CI-TC-0933
3520L4	CI-TC-0933
3520L4	CI-WP-12503
3520L7	PE-TC-3538
3520L8	PE-TC-3882
3520L9	CI-TC-0933
3520L9	CI-WP-12503
3520N1	CI-TC-0933
3520N3	FI-WP-3840
3520N4	CI-WP-3876
3520N4	FI-WP-0111
3520N6	PE-WP-3320
3520N7	PE-TC-5754
3520P0	CI-TC-2056
3520P2	PE-TC-1033
3520P3	PE-TC-1032
3520P4	FI-TC-8871
3520P6	CI-WP-2464
3520P8	FI-TC-8871
3520P9	CI-TC-0933

...CITROËN	MOOG
3520Q0	CI-TC-0933
3520Q1	PE-WP-3320
3520Q2	PE-WP-4027
3520Q2 (-)	CI-SB-4960
3520Q2 (-)	CI-SB-4961
3520Q3	CI-WP-0713
3520Q4	CI-WP-0713
3520Q5	CI-WP-0713
3520R0	CI-TC-0933
3520R0	CI-WP-12503
3520R1	CI-TC-0933
3520R2	CI-TC-0933
3520R2	CI-WP-12503
3520R3	CI-TC-0933
3520R4	CI-TC-0933
3520R4	CI-WP-12503
3520R5	CI-TC-0933
3520R7	PE-WP-4741
3520R8	CI-TC-7298
3520R8	CI-TC-8419
3520R8 (-)	CI-SB-7317
3520S0 (-)	CI-SB-5125
3520S0 (-)	CI-SB-5126
3520S1 (-)	CI-SB-5125
3520S1 (-)	CI-SB-5126
3520S2	PE-TC-1032
3520S5	PE-TC-8483
3520S6	CI-TC-10887
3520S8	PE-TC-5754
3520S9	PE-TC-5754
3520T2	CI-WP-12503
3520T5	CI-WP-12503
3520T6	CI-WP-12503
3520T7	CI-WP-12503
3520T8	CI-WP-12503
3520T9	CI-WP-12503
3520V0	PE-SB-7429
3520V0	PE-SB-7430
3520V0	PE-WP-7427
3520V1	CI-TC-0933
3520V2	PE-TC-7382
3520V3	CI-WP-0713
3520V8	CI-TC-7298
3520V8	CI-TC-8419
3520W1	CI-TC-15533
3520W1 (-)	CI-SB-15532
3520W2	CI-TC-15535
3520W2 (-)	CI-SB-15532
3520W3	FI-WP-3959
3520W4	PE-TC-8483
3520W5	PE-WP-4741
3520W7	CI-WP-8761
3520X0	PE-TC-8483
3520X0 (-)	PE-SB-8484
3520X6	CI-TC-12665
3520X6 (-)	CI-SB-13348

...CITROËN	MOOG
3520X7 (-)	PE-SB-8472
3520X9	PE-SB-7429
3520X9	PE-SB-7430
3520X9	PE-WP-7427
3520Y0	PE-TC-13455
3520Y0 (-)	PE-SB-13457
3520Y4	FI-WP-3959
352100	CI-WP-0600
352131	PE-TC-3199
352133	PE-TC-3199
352134	PE-TC-3199
352137	PE-TC-5033
352141	PE-TC-3196
352145	PE-WP-0578
352146	PE-TC-0077
352149	PE-TC-0077
352152	PE-TC-5037
352153	PE-TC-5039
352158	CI-TC-0161
352164	FI-TC-8872
352164 (-)	PE-SB-1313
352165	FI-WP-0108
352166	FI-WP-0110
352171	CI-WP-13402
352172	CI-WP-13402
352173	CI-WP-13402
352174	CI-WP-13402
352175	CI-WP-13402
352176	PE-TC-0079
352180	PE-TC-0219
352180	PE-TC-8876
352181	CI-TC-0161
352182	CI-TC-0161
352183	FI-TC-8872
352185	FI-TC-8872
352190	CI-WP-13402
3521A7	CI-WP-13402
3521A8	CI-WP-13402
3521C8	PE-TC-1571
3521C9	FI-TC-8872
3521E3	PE-WP-13404
3521E3	PE-WP-13408
3521E4	CI-WP-0600
3521E5	CI-WP-0600
3521E5	CI-WP-13402
3521E6	CI-WP-0600
3521E6	CI-WP-13402
3521E7	PE-TC-1034
3521E9	CI-WP-0714
3521F3	CI-WP-0714
3521F4	CI-WP-0714
3521F9	CI-WP-0714
3521G3	CI-TC-2055
3521G6	PE-TC-1036
3521G9	CI-WP-0714
3521H0	CI-WP-2464

...CITROËN	MOOG
3521H0	PE-SB-1312
3521H1	CI-WP-2465
3521H1	PE-SB-1312
3521H2	FI-WP-0108
3521H2	FI-WP-0118
3521H3	CI-WP-3877
3521H3	FI-WP-0110
3521H5	CI-TC-0932
3521H6	CI-TC-0932
3521H9	PE-TC-3539
3521J0	PE-TC-3883
3521J1	CI-TC-0932
3521J2	CI-TC-0932
3521J3	FI-WP-0118
3521J4	CI-WP-3877
3521J4	FI-WP-0110
3521J6	PE-SB-3513
3521J6	PE-WP-3321
3521J7	PE-TC-5755
3521K0	CI-TC-2055
3521K3	PE-TC-0999
3521K4	FI-TC-8872
3521K6	CI-WP-2465
3521K8	CI-TC-0932
3521L0	FI-TC-8872
3521L1	CI-TC-0932
3521L2	PE-WP-3321
3521L3	PE-WP-4028
3521L3 (-)	CI-SB-4960
3521L3 (-)	CI-SB-4961
3521L4	CI-WP-0714
3521L5	CI-WP-0714
3521L6	CI-WP-0714
3521N1	CI-TC-0932
3521N2	CI-TC-0932
3521N3	CI-TC-0932
3521N4	CI-TC-0932
3521N5	CI-TC-0932
3521N6	CI-TC-0932
3521N8	PE-WP-4742
3521N9	CI-TC-7299
3521N9	CI-TC-8418
3521N9 (-)	CI-SB-7317
3521P1 (-)	CI-SB-5125
3521P1 (-)	CI-SB-5126
3521P2 (-)	CI-SB-5125
3521P2 (-)	CI-SB-5126
3521P3	PE-TC-0999
3521P6	PE-TC-8482
3521P7	CI-TC-10888
3521P9	PE-TC-5755
3521Q0	PE-TC-5755
3521Q3	CI-WP-12504
3521R (-)	CI-BJ-10658
3521R1	PE-SB-7429
3521R1	PE-SB-7430

...CITROËN	MOOG
3521R1	PE-WP-7428
3521R2	CI-TC-0932
3521R3	PE-TC-7381
3521R4	CI-WP-0714
3521S0	CI-TC-7299
3521S0	CI-TC-8418
3521S4	CI-TC-15534
3521S4 (-)	CI-SB-15532
3521S5	CI-TC-15536
3521S5 (-)	CI-SB-15532
3521S6	FI-WP-3958
3521S7	PE-TC-8482
3521S8	PE-WP-4742
3521S9	CI-WP-8760
3521T2	PE-TC-8482
3521T2 (-)	PE-SB-8484
3521T7	CI-TC-12666
3521T7 (-)	CI-SB-13348
3521T8 (-)	PE-SB-8472
3521V0	PE-SB-7429
3521V0	PE-SB-7430
3521V0	PE-WP-7428
3521V1	PE-TC-13456
3521V1 (-)	PE-SB-13457
3521V5	FI-WP-3958
352314	PE-SB-1828
352320	OP-SB-0443
352320	PE-SB-1314
352323	PE-SB-1321
352331	CI-SB-1262
352340	PE-SB-1317
352343	PE-SB-2826
352349	PE-SB-1315
352350	PE-SB-1310
352351	PE-SB-1301
352352	CI-SB-1302
352353	CI-SB-1310
352360	PE-SB-1319
352361	PE-SB-1318
352362	PE-SB-1304
352364	CI-SB-1302
352375	PE-SB-1304
352376	PE-SB-2344
352377	PE-SB-1320
352379	PE-SB-3947
352380	FI-SB-5435
352380	PE-SB-4963
352381	CI-SB-1307
352382	CI-SB-1309
352383	CI-SB-0224
352384	CI-SB-2209
352389	PE-SB-1316
352391	PE-SB-0225
352392	PE-SB-1320
352393	PE-SB-1138
352394	PE-SB-1137

...CITROËN	MOOG
352395	CI-SB-2210
352398	CI-SB-0934
352399	CI-SB-0935
3523AA	CI-SB-0935
3523AL	PE-SB-8468
3523AP	PE-SB-1137
3523AQ	PE-SB-3492
3523AR	CI-SB-2210
3523AT	CI-SB-0935
3523AW	PE-SB-8468
3523AZ	PE-SB-8468
3523CA	PE-SB-8469
3523CC	PE-SB-4744
3523CE	PE-SB-4743
3523CS	PE-SB-7430
3523CZ	CI-SB-10999
3523EA	CI-SB-10999
3523EC	CI-SB-12604
3523EE	CI-SB-12604
352V0 (-)	CI-BJ-10658
356108	PE-SB-6835
364017	FI-BJ-4077
364018	FI-BJ-4077
364021	PE-BJ-4249
364026	PE-BJ-4087
364028	PE-BJ-3347
364032	FI-BJ-7530
364033	FI-BJ-7531
364034	PE-BJ-3347
364035	PE-SB-3866
364036	PE-BJ-3356
364038	CI-BJ-3355
364039	CI-BJ-3355
364041	PE-SB-0998
364042	CI-BJ-3355
364043	CI-BJ-3355
364044	PE-BJ-6909
364048	PE-BJ-0409
364050	CI-BJ-0523
364051	CI-BJ-0523
364052	CI-BJ-0523
364053	PE-BJ-0837
364054	FI-BJ-0513
364055	FI-BJ-0512
364056	CI-BJ-0868
364056	PE-BJ-3847
364057	PE-BJ-3323
364058	PE-BJ-3322
364059	PE-BJ-4501
364060	PE-BJ-0837
364061	CI-BJ-0868
364061	PE-BJ-3847
364062	CI-BJ-0868
364062	PE-BJ-3847
364065	CI-BJ-0868
364065	PE-BJ-3847

...CITROËN	MOOG
364066	PE-BJ-4501
364067	FI-BJ-4958
364068	PE-BJ-0837
364069	PE-BJ-13251
364070	PE-BJ-0837
364071	PE-BJ-3347
364072	PE-BJ-3322
364073	PE-BJ-0837
364074	PE-BJ-3323
364076	FI-BJ-4958
364077	CI-BJ-8795
364078	PE-BJ-15315
364083	PE-BJ-12663
381200	CI-AX-2467
3812000	PE-AX-3327
38120000	CI-AX-1707
38120000	CI-RK-15007
381225 (-)	PE-AX-5704
381232	PE-AX-5746
381232	PE-DS-6294
381247 (-)	PE-AX-5747
381252	PE-DS-6924
381272	PE-DS-6902
381273	PE-DS-6903
381280	CI-DS-5022
381281	CI-DS-5023
381285	PE-DS-6974
381286	PE-DS-6973
381287	PE-DS-6976
381288	PE-DS-6975
381292	PE-AX-6907
381292	PE-DS-6923
381293	PE-AX-6906
381299	PE-AX-6901
3812A0	CI-LS-1727
3812A4	CI-RK-15010
3812A4	FI-AX-1461
3812A4	PE-AX-5047
3812A6	PE-AX-3915
3812A9	PE-AX-0645
3812C0	CI-AX-3361
3812C0	CI-DS-3366
3812C0	CI-RK-15001
3812C0	CI-RK-15003
3812C0	CI-RK-15018
3812C0	CI-RK-15019
3812C4	PE-AX-0847
3812C5	PE-AX-1570
3812C5	PE-RK-15047
3812C5	PE-RK-15048
3812C6	CI-AX-1707
3812C6	CI-RK-15007
3812C7	PE-AX-0862
3812C8	CI-AX-0863
3812E0	PE-AX-0860
3812E1	CI-RK-15059

...CITROËN	MOOG
3812E1	PE-AX-2059
3812E2	CI-AX-2467
3812E5	CI-AX-3991
3812E6	PE-AX-13634
3812E7	PE-AX-3327
3812E8	PE-AX-4740
3812E9	CI-AX-5690
3812F0	CI-AX-5169
3812F1	PE-AX-7426
3812F2	PE-AX-7067
3812F3	CI-AX-8762
3812F4	PE-AX-7969
3812F6	CI-AX-8851
3812F7	PE-AX-12654
3812G3	PE-AX-12660
381709 (-)	PE-ES-5703
381710 (-)	PE-ES-5703
381711	FI-ES-4078
381718	PE-ES-5703
381718 (-)	PE-ES-5703
381721	PE-ES-5721
381722	PE-ES-5722
381730	PE-ES-5723
381731	PE-ES-5724
381732	PE-ES-0780
381733	PE-ES-0664
381734	CI-AX-0537
381735	CI-ES-1782
381736	CI-ES-0011
381737	PE-ES-1668
381738	PE-ES-1656
381739	PE-ES-0088
381740	PE-ES-0089
381741	PE-ES-5723
381742	PE-ES-5724
381743	PE-ES-1668
381744	PE-ES-1656
381747	CI-ES-3848
381750	PE-ES-5703
381753	CI-ES-0931
381754	CI-ES-0930
381755	CI-ES-0865
381756	CI-ES-0864
381757	PE-ES-3330
381758	PE-ES-3331
381759	CI-ES-0931
381760	CI-ES-0930
381761	CI-ES-14932
381762	CI-ES-14931
381763	CI-ES-3965
381764	CI-ES-3964
381765	PE-ES-8473
381766	PE-ES-8474
381767	PE-ES-4163
381768	PE-ES-4164
381769	CI-ES-5119

...CITROËN	MOOG
381770	CI-ES-5120
381771	CI-ES-7237
381772	CI-ES-7238
381773	CI-ES-7316
381774	PE-ES-7414
381775	PE-ES-7066
381776	PE-ES-7065
381777	CI-ES-5119
381780	CI-ES-8465
381781	CI-ES-8466
381784	CI-ES-8975
381785	CI-ES-8976
381786	CI-ES-8975
381786	OP-ES-4921
381787	CI-ES-8976
381787	OP-ES-4922
381788	PE-ES-7066
381789	PE-ES-7065
381791	CI-ES-8328
381792	CI-ES-8329
381794	PE-ES-12655
3817A1	PE-ES-12661
3817A2	PE-ES-12662
3817A5	CI-ES-7316
400133	CI-AX-5060
400177	CI-AX-7879
4001E4	CI-AX-7320
4001E4S1	CI-AX-7320
4001K6	CI-AX-7879
4001NZ	CI-AX-7879
4001PA	CI-AX-7879
400622	K150119
400622	K150120
400624	FI-AX-7528
401815	K150119
4018A3	FI-ES-7529
4018A4	FI-AX-7528
4018A6	K150123
4018E0	CI-ES-2460
4018H4	FI-ES-7529
405909	PE-ES-5042
405912	CI-ES-2466
406615	K150005
406616	K150125
406616	K150126
406618	K150047
406619	K150047
406621	K150043
406621	K150122
406621	K150266
406622	K150125
406622	K150126
406629	K150043
406630	K150043
406630	K150122
406632	K150059

...CITROËN	MOOG
406632	K150075
406634	K150059
406634	K150075
406635	K150119
406635	K150120
406636	K150123
406637	K150043
406641	K150087
406642	K150122
406643	K150124
406643	K150126
406643	K150266
406644	K150124
406644	K150125
406646	K150150
406648	K150152
406649	K150151
406650	K150129
406652	K150125
406652	K150126
406653	K150125
406653	K150126
406662	K150266
406664	K150225
406669	K150226
406670	K150227
406673	K150128
4241428	FI-TC-8872
4330859035	TO-BJ-2274
4331968	FI-SB-3171
4388159	FI-BJ-4077
4391814	PE-TC-5036
4403661	PE-ES-5703
4806859035 (-)	TO-BJ-2274
4806959035 (-)	TO-BJ-2274
503178	CI-SB-10082
503179	CI-SB-10083
503180	CI-SB-10070
503518	PE-SB-9974
503523	PE-SB-9975
503523	PE-SB-9976
503523	PE-SB-9981
503527	PE-SB-9975
503527	PE-SB-9981
503529	CI-SB-9696
503529	CI-SB-9698
503538	CI-SB-9696
503538	CI-SB-9698
503557	TO-SB-10085
503726	PE-SB-9972
503808	PE-SB-9971
503815	PE-SB-9970
503816	CI-SB-9698
503817	CI-SB-9696
503818	CI-SB-9684
503819	CI-SB-9682

...CITROËN	MOOG
503821	PE-SB-9975
503822	PE-SB-9976
503825	PE-SB-9986
503835	PE-SB-9984
503835S	PE-LS-1048
503839	PE-SB-9981
503841	CI-SB-9684
503842	CI-SB-9682
503846	PE-SB-9985
503868	CI-SB-10082
5038E4	PE-SB-10926
5038E5	PE-SB-10927
5038E6	PE-SB-10925
5081P3	CI-SB-14915
5081Q3 (-)	CI-SB-13678
508723	PE-DS-5707
508727	PE-LS-1118
508730	CI-DS-3348
508731	CI-DS-3348
508732	PE-AX-5704
508732	PE-DS-5707
508733	PE-LS-1626
508734	PE-LS-5046
508735	PE-LS-1048
508737	CI-LS-3267
508738	PE-DS-6970
508739	PE-LS-5046
508740	PE-DS-5041
508741	CI-DS-3348
508742	PE-DS-6970
508743	PE-LS-0592
508745	PE-LS-1573
508746	PE-LS-5046
508748	PE-LS-0592
508749	CI-DS-3348
508750	PE-LS-3817
508751	CI-LS-2468
508752	PE-LS-3324
508753	PE-LS-3325
508756	CI-LS-7259
508757	PE-LS-3817
508758	PE-LS-7425
508759	PE-LS-1573
508760	PE-LS-0592
508761	PE-LS-5046
508762	PE-LS-3817
508764	PE-LS-3817
508765	CI-LS-7297
508766	PE-LS-1573
508768	PE-LS-3989
508769	PE-LS-3990
508770	CI-LS-7297
508774	PE-LS-1573
508776	PE-LS-12664
508777	PE-LS-3817
508778	PE-LS-3817

...CITROËN	MOOG
508779	CI-LS-7297
509110	CI-LS-4959
509315	PE-SB-8784
509434	PE-SB-1632
509435	PE-SB-3218
509436	PE-SB-7772
509437	PE-SB-6649
509440	PE-SB-6650
509453	PE-SB-1295
509456	CI-SB-6698
509457	CI-SB-6697
509459	PE-SB-6729
509460	PE-SB-6730
509463	PE-SB-6777
509464	PE-SB-6773
509465	CI-SB-4737
509466	PE-SB-6774
509469	CI-SB-7141
509474	PE-SB-6703
509475	PE-SB-6704
509476	PE-SB-6778
509477	CI-SB-4736
509480	PE-SB-6779
509481	PE-SB-6750
509482	PE-SB-13633
509483	CI-SB-6776
509487	PE-SB-6780
509488	PE-SB-6781
509491	CI-SB-6784
509494	PE-SB-13683
509495	PE-SB-13632
509496	CI-SB-13496
509498	PE-SB-12652
509499	CI-SB-10735
5094A0	PE-SB-12653
5094A1	CI-SB-10736
5094A2	PE-SB-13682
5094A6	CI-SB-13680
5094A8	CI-SB-7949
5094A9	CI-SB-13679
5094C1	PE-SB-10738
5094C2	PE-SB-10741
5094C3	PE-SB-10852
5094C4	PE-SB-12589
5094C5	PE-SB-12590
5094C6	CI-SB-7938
5094E2	PE-SB-12589
5094E3	CI-SB-10709
5094E4	CI-SB-10710
5094E5	PE-SB-10500
5094E6	PE-SB-12544
5094E7	CI-SB-10711
5094F3	PE-SB-12652
5131 C9	CI-SB-4962
513143	PE-SB-4528
513147	PE-SB-8840

...CITROËN	MOOG
513153	PE-SB-7964
513154	PE-SB-10745
513156	PE-SB-7963
513163	PE-SB-4546
513169	CI-SB-4058
513170	CI-SB-4059
513171	CI-SB-4459
513172	CI-SB-7966
513173	CI-SB-7967
513176	PE-SB-10744
513178	PE-SB-4516
513179	PE-SB-2229
513180	PE-SB-7962
513194	PE-SB-10108
513199	PE-SB-2229
5131A0	PE-SB-10717
5131A4	CI-SB-8993
5131A5	PE-SB-10431
5131A7	PE-SB-10717
5131A9	PE-SB-10110
5131C1	CI-SB-8992
5131C6	CI-SB-10785
5131C7	PE-SB-10717
5131E9	CI-SB-8991
5131F0	CI-SB-8991
5131F2	PE-SB-8839
5131F4	CI-SB-13519
5131F9	CI-SB-8991
5131G1	MI-SB-13781
5131G4	CI-SB-10695
5131G8	FI-SB-8790
5131H1	PE-SB-10746
5131H5	CI-SB-13517
515110	PE-SB-7417
515124	PE-SB-7757
515259	PE-SB-4532
515261	CI-SB-4473
515262	CI-SB-7974
5170F5	CI-LS-7322
5170F6	CI-LS-7322
517242	PE-SB-6782
517243	PE-SB-6783
517258	CI-SB-7939
5175CF	PE-TC-8470
517830	PE-DS-6904
517831	PE-DS-6905
517835	CI-LS-0445
517839	PE-LS-0785
517846	PE-LS-3326
517848	PE-LS-7423
517849	PE-LS-7424
517852	PE-LS-3326
55700751	FI-SB-5439
55703232	FI-SB-5435
75472408	CI-RK-3569
7567284	PE-BJ-4087

...CITROËN	MOOG
7695186	PE-TC-5040
77362280	CI-AX-2467
77364568	CI-ES-8975
77364569	CI-ES-8976
7910030073	K150005
85048214	CI-AX-3361
85048214	CI-RK-15001
85048214	CI-RK-15003
85048214	CI-RK-15018
85048214	CI-RK-15019
91504248	PE-BJ-3189
91504354	CI-TC-3342
91504355	CI-TC-3341
91504358	CI-TC-3342
91504359	CI-TC-3341
91510864	K150045
91510913	K150005
91510923	K150005
91510923	K150045
91515653	PE-SB-1315
91516336	PE-TC-3198
91516337	PE-TC-3199
91519408	PE-TC-5033
91519409	PE-TC-5034
91539592	CI-SB-6644
9156337	PE-TC-3199
91595941	K150005
9404059080	PE-ES-5042
9451076780	K150048
9451076780	K150123
9451076780	K150129
9451076780	K150150
9451076780	K150151
9451076780	K150152
9451076880	K150048
9451083480	K150048
9451135680	PE-WP-0627
9455305059	PE-TC-3198
9455305060	PE-TC-3199
9458084180	PE-ES-5723
9458084280	PE-ES-5724
9471000565	PE-ES-5723
9471000665	PE-ES-5724
9471000965	CI-DS-3366
9471000965	PE-ES-5703
9471003465	PE-ES-5703
9471007465	PE-ES-5723
9471007565	PE-ES-5724
9471009465	PE-ES-0664
95028039	PE-BJ-3347
95069129	CI-LS-1727
95493208	PE-ES-5703
95494204	PE-BJ-4249
95494205	PE-BJ-4249
95494820	CI-DS-4250
95494821	CI-DS-4250

...CITROËN	MOOG
95495439	CI-AX-4246
95495439	CI-DS-4244
95495440	CI-AX-4246
95495440	CI-DS-4247
95495914	K150017
95495914	K150020
954960045	CI-ES-4248
95496044	CI-ES-4245
95496045	CI-ES-4248
95496072	K150020
954960879	CI-ES-4245
95510864	K150045
95560858	PE-AX-5704
95563797	CI-SB-1305
95563798	CI-SB-1306
95590802	PE-ES-5703
95597955	CI-DS-4250
95603308	PE-SB-1310
95603309	PE-BJ-3357
95607224	PE-BJ-4249
95608843	PE-BJ-3357
95609129	CI-LS-1727
95614999	CI-WP-5028
95615000	CI-WP-5027
95637690	CI-SB-1305
95639171	K150043
95639173	K150043
95658882	CI-WP-13401
95658883	CI-WP-13402
95658884	CI-WP-13401
95658885	CI-WP-13402
95658978	PE-WP-6980
95658979	PE-WP-6979
95668510	CI-WP-13401
95668511	CI-WP-13402
9566950880	CI-RK-15010
9566950880	PE-AX-5047
96025445	CI-BJ-3355
96032460	PE-AX-6901
96041652	PE-BJ-4249
96048214	CI-DS-3366
96050338	CI-SB-1310
96070064	CI-SB-1306
96080894	CI-DS-3348
96080921	CI-DS-3348
96080924	CI-DS-3348
96083570	CI-SB-1308
96087507	CI-BJ-3355
96089104	CI-SB-6694
96089106	CI-SB-6695
96093233	PE-BJ-3356
96103814	PE-DS-5707
96106474	PE-SB-1301
96110483	PE-SB-1303
96111480	CI-LS-1728
96113432	CI-SB-1302

...CITROËN	MOOG
96127397	K150049
96133255	PE-SB-1300
96133608	CI-WP-5028
961336089	CI-WP-5027
96133609	CI-WP-5027
96136394	CI-RK-15006
96136394	CI-RK-15008
96136394	CI-RK-15017
96136394	CI-RK-15045
96136394	PE-AX-5749
96145457	PE-LS-0595
9614545780	PE-LS-0595
96147478	CI-SB-4058
96147479	CI-SB-4059
96147514	PE-LS-1626
96148480	CI-SB-1310
9615230080	PE-DS-5043
96158745	PE-SB-6773
96177836	PE-DS-5041
9617783680	PE-DS-5041
96233739	PE-BJ-3347
96288787	PE-LS-1573
9628878780	PE-LS-1573
96324274	PE-LS-0592
9632427480	PE-LS-0592
9670771480	PE-WP-13660
9670772080	PE-WP-13659
9672192480	PE-BJ-14684
9674746280 (-)	PE-SB-14764
967476380	CI-SB-14916
9675028880	CI-WP-13640
9675031880	CI-WP-13639
9676032180	CI-SB-13993
9676035280	CI-SB-13994
9678311280	CI-WP-13992
9678311380	CI-WP-13991
9680302580	CI-SB-8991
9681897280	CI-SB-8991
9750000280	K150047
9750000380	K150047
9750001180	PE-AX-3696
9750079980	FI-ES-4078
9800596580	CI-TC-14934
9800596580	PE-TC-14688
9800596680	CI-TC-14933
9800596680	PE-TC-14687
9803434080	CI-BJ-13988
9804947480	PE-LS-3817
9805607380	CI-TC-14828
9805607480	CI-TC-14827
9807130080	PE-LS-3326
9807914180	PE-WP-14686
9807914280	PE-WP-14685
9808868280	PE-LS-1573

DACIA	MOOG
401600004R	RE-BJ-7212

...DACIA	MOOG
401602308R	RE-BJ-10478
401604793R	RE-BJ-2832
401609060R	RE-BJ-8336
4417177	RE-WP-7761
4417178	RE-WP-7760
485200001R	RE-ES-7301
485200002R	RE-ES-7302
485200368R	RE-ES-13645
485200410R	RE-ES-3756
485201502R	RE-ES-13319
485202710R	RE-ES-7861
485202733R	RE-ES-13320
485202867R	RE-ES-3755
485204680R	RE-ES-7856
485208355R	RE-ES-13646
485210001R	RE-AX-7303
485211071R	RE-AX-13416
485213172R	RE-AX-13417
5442300QAA	RE-SB-3845
545000002R	RE-WP-8330
545000008R	RE-WP-12598
545000008R (-)	RE-BJ-12595
545000138R	RE-TC-10480
545001535R	RE-TC-10480
545003037R	RE-WP-2090
545004269R	RE-WP-3745
545004529R	RE-WP-13608
545004529R (-)	RE-BJ-13609
545004529R (-)	RE-SB-13600
545004529RZZ	RE-SB-13600
545006542R	RE-TC-10480
545006542R (-)	RE-SB-10477
545007106R	RE-WP-13608
545009207R	RE-WP-8334
545009207R (-)	RE-SB-8013
545009207R (-)	RE-SB-8017
545010009R	RE-WP-8331
545010010R	RE-WP-12597
545010010R (-)	RE-BJ-12595
545010011R (-)	RE-SB-8332
545010011R (-)	RE-SB-8333
545010012R (-)	RE-SB-8332
545010012R (-)	RE-SB-8333
545010294R	RE-WP-13607
545011362R	RE-WP-3744
545011697R	RE-TC-10479
545011727R	RE-WP-13607
545011727R (-)	RE-BJ-13609
545011727R (-)	RE-SB-13600
545011727RZZ	RE-SB-13600
545014055R	RE-WP-8335
545014055R (-)	RE-SB-8013
545014055R (-)	RE-SB-8017
545016746R	RE-TC-10479
545016746R (-)	RE-SB-10477
545019294R	RE-WP-3744

...DACIA	MOOG
545019969R	RE-TC-10479
545046817R	RE-WP-13710
545050510R	RE-WP-13709
5457000QAA	RE-SB-3846
546120007R	RE-SB-13315
546130003R	RE-SB-10542
546180001R	RE-LS-7304
546180002R	RE-LS-7999
550445344R	RE-SB-10803
551209341R	RE-TC-14597
562300111R	SK-SB-14592
6000022714	RE-ES-7023
6000022715	RE-ES-7024
6000022720	RE-ES-1563
6000022721	RE-ES-1562
6000022730	RE-ES-7026
6000022731	RE-ES-7027
6000022736	RE-ES-7060
6000022737	RE-ES-7061
6000022752	RE-ES-7053
6000022753	RE-ES-7054
6000022762	RE-ES-0426
6000030047	RE-ES-7014
6000030048	RE-ES-7015
6000030064	RE-ES-4288
6000030065	RE-ES-4287
6001021454	RE-TC-4011
6001021455	RE-TC-4012
6001547138	RE-LS-5740
6001547140	RE-SB-3758
6001547519	RE-WP-3745
6001547520	RE-WP-3744
6001547606	RE-AX-3760
6001547606	RE-RK-15023
6001547610	RE-ES-3755
6001547611	RE-ES-3756
6001549181	RE-WP-3744
6001549182	RE-WP-3745
6001549988	RE-SB-4191
6001549989	RE-SB-4191
6001550441	RE-AX-3760
6001550441	RE-RK-15023
6001550442	RE-ES-3755
6001550443	RE-ES-3756
6001550446	RE-WP-3744
6001550447	RE-WP-3745
6001550909	RE-WP-3744
6001550910	RE-WP-3745
6001550911	RE-WP-3744
6001550912	RE-WP-3745
6025305572	RE-WP-1062
6025305573	RE-WP-1063
6025306471	RE-SB-4713
6025308155	RE-BJ-0471
6025370230	RE-ES-0427
6025370493	RE-DS-2827

...DACIA	MOOG
6025370493 (-)	RE-AX-2374
6025370494	RE-DS-2828
6040002105	RE-BJ-2302
6040002245	RE-SB-3746
6640096299	RE-SB-13600
7320351	RE-SB-10172
7700301255	RE-SB-7985
7700301720	RE-SB-7985
7700302118	RE-WP-1052
7700302119	RE-WP-1053
7700302278	RE-SB-10929
7700309070	RE-LS-1058
7700309071	RE-LS-1059
7700312851	RE-BJ-2098
7700312852	RE-BJ-1040
7700314855	RE-SB-6847
7700413493	RE-WP-0226
7700421804	RE-BJ-7025
7700424459	RE-SB-1343
7700425227	RE-WP-0339
7700425228	RE-WP-0338
7700428738	RE-SB-2211
7700430765	RE-WP-2037
7700430766	RE-WP-2038
7700437136	RE-LS-7977
7700465689	RE-BJ-4281
7700469580	RE-BJ-4266
7700571172	RE-ES-4289
7700571173	RE-ES-4290
7700654178	RE-SB-1592
7700656272	RE-AX-4278
7700667186	RE-SB-6647
7700676325	RE-WP-0227
7700695673	RE-WP-7041
7700695674	RE-WP-7040
7700706628	RE-BJ-4295
7700708438	RE-BJ-4260
7700708439	RE-BJ-4261
7700710206	RE-AX-4272
7700710209	RE-AX-7008
7700757324	RE-SB-9989
7700759418	RE-DS-7022
7700760264	RE-SB-0540
7700781441	RE-SB-7325
7700781463	RE-SB-4486
7700783455	RE-WP-7036
7700783456	RE-WP-7037
7700784170	RE-SB-1719
7700784171	RE-SB-2835
7700785788	RE-SB-1166
7700789412	RE-SB-6672
7700794386	RE-WP-7030
7700794387	RE-WP-7031
7700797821	RE-SB-6670
7700798053	RE-SB-1694
7700799064	RE-SB-1335

...DACIA	MOOG
7700799065	RE-SB-1336
7700799404	RE-SB-1167
7700802343	RE-WP-4928
7700802344	RE-WP-4929
7700805494	RE-DS-7057
7700806238	RE-SB-1342
7700806239	RE-SB-1341
7700807580	RE-WP-0340
7700807581	RE-WP-0341
7700818051	RE-WP-7033
7700818052	RE-WP-7032
7700819928	RE-SB-1337
7700819929	RE-SB-1338
7700820028	RE-WP-0228
7700820029	RE-WP-0229
7700821167	RE-SB-7354
7700822503	RE-SB-1340
7700824042	RE-SB-1339
7700827178	RE-DS-13249
7700827435	RE-SB-9987
7700827436	RE-SB-9988
7700829529	RE-SB-9992
7700835254	RE-SB-9991
7700835929	RE-SB-2834
7700840741	RE-SB-1334
7700846916	RE-SB-9997
7700847382	RE-LS-4008
7700847383	RE-SB-2238
7701047415	RE-ES-0672
7701047416	RE-ES-0673
7701049282	RE-ES-0853
7701049283	RE-ES-0852
7701056678	RE-SB-6849
7701056970	RE-BJ-7906
7701069131	RE-SB-10843
7701070154	RE-BJ-7905
7701209534	RE-RK-7332
7701209534	RE-SB-4095
7701450904	RE-BJ-0526
7701460875 (-)	RE-AX-4253
7701460885	RE-BJ-0532
7701460886	RE-BJ-0531
7701460955	RE-ES-4252
7701461010	RE-DS-4299
7701461141	RE-ES-4256
7701461331	RE-BJ-4267
7701461667	RE-BJ-4271
7701461770	RE-ES-4273
7701462170	RE-AX-4265
7701462182	RE-BJ-4264
7701462387	RE-AX-4280
7701462427	RE-ES-4277
7701462692	RE-BJ-4276
7701462693	RE-BJ-4275
7701462987	RE-AX-7020
7701463025 (-)	RE-DS-7009

...DACIA	MOOG
7701463346 (-)	RE-AX-2039
7701466799 (-)	RE-AX-0380
7701466799 (-)	RE-RK-15021
7701466799 (-)	RE-RK-15022
7701466799 (-)	RE-RK-15027
7701466799 (-)	RE-RK-15028
7701467218	RE-DS-7045
7701467218 (-)	RE-AX-7046
7701467219	RE-DS-7044
7701467271	RE-DS-7002
7701467271 (-)	RE-AX-0602
7701467271 (-)	RE-RK-15015
7701467272	RE-DS-7003
7701467501	RE-DS-7059
7701467501 (-)	RE-AX-7056
7701467501 (-)	RE-RK-15016
7701467502	RE-DS-7058
7701467859	RE-DS-1071
7701468272	RE-DS-1066
7701468411	RE-BJ-0811
7701468883	RE-BJ-4264
7701468952	RE-DS-0856
7701468953	RE-DS-0857
7701469229	RE-DS-7017
7701469280	RE-AX-0676
7701469464	RE-BJ-10718
7701469502	RE-AX-0675
7701469777	RE-AX-7001
7701470362	RE-AX-2097
7701470363	RE-ES-0809
7701470364	RE-ES-0810
7701470763	RE-AX-2087
7701470764	RE-AX-1616
7701471124	RE-AX-0854
7701471125	RE-AX-1564
7701471143	RE-AX-0855
7701471844	RE-AX-0859
7701471844	RE-RK-15013
7701471885	RE-AX-7756
7701472087	RE-AX-0858
7701472087	RE-RK-15014
7701472113	RE-AX-3851
7701472113	RE-RK-15025
7701472113	RE-RK-15026
7701472120	RE-AX-0589
7701472120	RE-RK-15024
7701472734	RE-AX-4014
7701472734	RE-RK-15033
7701472734	RE-RK-15248
7701472766	RE-AX-1060
7701472766	RE-RK-15067
7701473498	RE-AX-5087
7701473498	RE-RK-15002
7701473498	RE-RK-15005
7701473656	RE-AX-10820
7701474076	RE-AX-2831

...DACIA	MOOG
7701474076	RE-RK-15068
7701474448 (-)	RE-AX-2091
7701474448 (-)	RE-RK-15000
7701474795	RE-ES-2092
7701474796	RE-ES-2093
7701475841	RE-AX-2103
7701475841	RE-RK-15066
7701477385	RE-BJ-7762
7701477878	RE-AX-8103
7701478406	RE-AX-7300
7701478406	RE-RK-15039
7701478406	RE-RK-15040
7701478407	RE-ES-7306
7701478408	RE-ES-7307
7702111568	RE-SB-1643
7702144561	RE-SB-6836
7702145337	RE-AX-4298
7704000681	RE-SB-1333
7704001371	RE-SB-1332
8200001857	RE-LS-4439
8200002869	RE-SB-2836
8200002870	RE-LS-2095
8200020402	RE-SB-10801
8200024373	RE-SB-7205
8200040618	RE-LS-3072
8200041166	RE-SB-3821
8200042594	RE-SB-7975
8200050191	RE-LS-1072
8200127308	RE-LS-2100
8200150759	RE-SB-2199
8200166159	RE-LS-2088
8200166160	RE-LS-7407
8200216376	RE-WP-3744
8200216377	RE-WP-3745
8200222463	RE-SB-9996
8200242025	RE-SB-3820
8200255760	RE-WP-3489
8200255761	RE-WP-3490
8200265217	RE-LS-7996
8200272592	RE-SB-12644
8200272594	RE-SB-6850
8200277960	RE-LS-5740
8200287912	RE-SB-4191
8200298454	RE-WP-2089
8200298455	RE-WP-2090
8200298455S	RE-BJ-2832
8200298760	RE-BJ-2094
8200346941	RE-WP-2101
8200346942	RE-WP-2102
8200380965	RE-SB-9030
8200389135 (-)	RE-SB-2830
8200389716	RE-WP-2300
8200427869	RE-SB-4108
8200452715	RE-WP-2301
8200586561	RE-WP-7903
8200586561 (-)	RE-BJ-7431

...DACIA	MOOG
8200586561 (-)	RE-SB-7433
8200586561 (-)	RE-SB-7434
8200586567	RE-WP-7904
8200586567 (-)	RE-BJ-7432
8200586567 (-)	RE-SB-7433
8200586567 (-)	RE-SB-7434
8200688871	RE-TC-10093
8200688875	RE-TC-10092
8200691425	RE-SB-10541
8200763290	RE-WP-8102
8200763290 (-)	RE-BJ-8100
8200763294	RE-WP-8101
8200763294 (-)	RE-BJ-8100
8200792639	RE-WP-3744
8200792640	RE-WP-3745
8200814411	RE-LS-7304
8200820918	RE-WP-3745
8200820930	RE-WP-3744
8200839119	RE-TC-14596
8200839121	RE-SB-14598
8200839124	RE-TC-14595
8200852550	RE-SB-10481
8200891487	RE-LS-10543
8200910716	RE-WP-3744
8200910717	RE-WP-3745
8201108332	RE-ES-8764
8201108339	RE-ES-8763
8201108350	RE-AX-8765

DAEWOO	MOOG
07846485	OP-ES-5380
07846495	OP-ES-5377
07846696	OP-AX-0659
07848282	OP-ES-5380
13219090	OP-SB-8420
13258052	OP-LS-7446
13278358	OP-AX-10486
15293924	OP-BJ-4745
1603148	OP-LS-2018
1609026	OP-ES-7415
242000	OP-SB-9716
26001806	OP-ES-5380
26001807	OP-ES-5377
26021070	K150064
322125	OP-DS-5376
322126	OP-DS-3812
350617	OP-LS-8349
350618	OP-LS-7446
352108	OP-SB-10570
352110	OP-TC-10115
352115	OP-TC-10116
352123	OP-WP-5570
352124	OP-WP-5571
352127	OP-WP-5571
352128	OP-WP-5570
352169	OP-WP-5570

...DAEWOO	MOOG
352172	OP-WP-5571
352330	OP-SB-1375
352492	OP-TC-10115
352493	OP-TC-10116
352494	OP-SB-10570
352866	OP-SB-8420
4443003010	DE-BJ-2863
4443003011	DE-BJ-2863
4450505001	DE-BJ-2865
4475005000	DE-LS-2862
4475005001	DE-LS-2862
4520083E00	OP-TC-3619
45200A70B00	DE-TC-0125
45200A70B000	DE-TC-0125
4666005500	DE-ES-2861
4666005501	DE-ES-2861
4666005502	DE-ES-2861
4705172	OP-SB-1386
4705742	OP-TC-3619
4706665	OP-TC-3619
4707280	OP-TC-3619
4803429	OP-ES-4746
4804642	OP-LS-7224
4806300	OP-WP-7222
4806300 (-)	OP-BJ-4745
4806301	OP-WP-7223
4806304	OP-LS-4707
4806305	OP-LS-4706
4810831	OP-WP-7222
4812870	OP-WP-7223
4817777	OP-WP-7222
48810A78B00	DE-ES-0126
48810A78B00000	DE-ES-0639
48830A78B00	DE-DS-0127
520262	DE-ES-0634
520262	DE-ES-7242
520540	K150057
520672	DE-AX-1821
520672	DE-AX-5636
520738	K150171
520808	DE-AX-2479
520838	DE-AX-1821
520838	DE-AX-5636
520898	DE-AX-2479
521136	DE-ES-0126
521136	DE-ES-0452
521136	DE-ES-0639
521255	DE-AX-1822
521257	DE-AX-1773
521564	DE-AX-2470
576242000	OP-SB-9716
7848281	OP-DS-5376
7848282	OP-DS-3812
90125567	OP-DS-5376
90184755	OP-SB-9716
90184756	OP-SB-9716

...DAEWOO	MOOG
90189050	OP-SB-4068
90235040	OP-SB-1644
90289557	OP-SB-9716
90375505	OP-BJ-5375
90375506	OP-WP-5571
920007	OP-AX-10486
9210270	OP-TC-3619
92119830	DE-BJ-5422
9212530	OP-TC-3619
9214826	OP-TC-3619
93740621	DE-AX-2470
93740622	DE-ES-2475
93740623	DE-ES-2476
93740701	DE-AX-8886
93740710	DE-ES-0634
93740710	DE-ES-7242
93740722	DE-ES-2475
93740722	DE-ES-3893
93740723	DE-ES-2476
93740723	DE-ES-3894
93741074	DE-AX-1822
93741091	DE-ES-0639
94788122	OP-BJ-5375
95032440	DE-WP-10653
95032441	DE-WP-10654
95947829	DE-LS-10623
95952782	DE-WP-10653
95952782 (-)	DE-BJ-10655
95952782 (-)	DE-SB-10656
95952782 (-)	DE-SB-10657
95952783	DE-WP-10654
95952783 (-)	DE-BJ-10655
95952783 (-)	DE-SB-10656
95952783 (-)	DE-SB-10657
95952930	DE-AX-5752
95954754 (-)	OP-AX-7221
95967285	DE-ES-10621
95967294	DE-AX-10652
96129753	DE-ES-0634
961316765	DE-TC-0125
96185969	OP-WP-5570
96185970	OP-WP-5571
96205808	DE-ES-0634
96205809	DE-ES-0634
96205809	DE-ES-7242
96207628	DE-LS-8809
96213119	DE-BJ-0636
96218397	OP-WP-5570
96218398	OP-WP-5571
96225858	DE-LS-5136
96225859	DE-LS-5135
96261099	DE-WP-5637
96261100	DE-WP-5638
96261108	DE-BJ-2473
96261378	DE-ES-2471
96261379	DE-ES-2472

...DAEWOO	MOOG
96268438	DE-WP-0631
96268438 (-)	DE-SB-4848
96268438 (-)	DE-SB-4849
96268439	DE-WP-0631
96268439 (-)	DE-SB-4848
96268439 (-)	DE-SB-4849
96268440	DE-WP-0630
96268440	DE-WP-0631
96268454	OP-WP-0836
96268455	OP-WP-0833
96275014	DE-WP-0630
96275015	DE-WP-0630
96275018	OP-ES-5377
96275019	OP-ES-5380
96275798	DE-LS-2299
96275798	OP-DS-0750
96300222	DE-LS-3271
96300627	OP-DS-0750
96300648	DE-BJ-0633
96305974	DE-WP-0631
96305975	DE-WP-0630
96305975	DE-WP-0631
96316765	DE-TC-0125
96322618	DE-SB-13996
96328434	DE-SB-10821
96328437	DE-BJ-5422
96378346	DE-SB-5775
96378347	DE-WP-5637
96378348	DE-WP-5638
96380586	OP-SB-1386
96380586	SZ-SB-2960
96380613	OP-SB-1386
96388640	DE-SB-8905
96388641	DE-SB-8906
96391850	DE-WP-4419
96391851	DE-WP-4420
96391856	DE-SB-7241
96391875	DE-LS-2299
96391875	OP-DS-0750
96391876	DE-LS-3271
96391876	OP-DS-0750
96394930	DE-SB-14703
96403099	DE-LS-3897
96403100	DE-LS-3896
96407485	DE-ES-3968
96407486	DE-ES-3969
96407755	DE-SB-14618
96415063	DE-WP-4419
96415064	DE-WP-4420
96423220	DE-WP-5637
96423324	DE-WP-5638
96434540	DE-SB-14056
96434543	DE-SB-14618
96435292	DE-SB-13953
96435295	DE-SB-13953
96445783	DE-BJ-5422

...DAEWOO

	MOOG
96446586	DE-ES-0634
96446586	DE-ES-7242
96454146	DE-SB-14703
96456713	DE-SB-9726
96456715	DE-SB-9726
96474040	DE-SB-14056
96474043	DE-SB-14618
96475985	DE-SB-14703
96490218	DE-BJ-3970
96535010	DE-SB-9724
96535011	DE-SB-9724
96535081	DE-WP-2477
96535081 (-)	DE-SB-7239
96535081 (-)	DE-SB-7240
96535082	DE-WP-2478
96535082 (-)	DE-SB-7239
96535082 (-)	DE-SB-7240
96535087	DE-SB-7239
96535088	DE-SB-7240
96535089	DE-BJ-2469
96535095	DE-SB-13953
96535166	DE-SB-9726
96535300	DE-AX-2474
96549923	DE-SB-14056
96561754	DE-LS-3971
96611265	DE-TC-0125
96626150	OP-LS-7224
96626247	OP-LS-4707
96626248	OP-LS-4706
96639904	DE-LS-8903
96639905	DE-LS-8904
96639910	DE-LS-10435
96653351	DE-SB-13953
96804650	DE-SB-13953
96819161 (-)	OP-SB-8779
96819161 (-)	OP-SB-8780
96819162 (-)	OP-SB-8779
96819162 (-)	OP-SB-8780
96839848	DE-SB-14056
96859498	DE-SB-14703
96870461	DE-SB-13953
96870465	DE-WP-2477
96870466	DE-WP-2478
96933805	DE-SB-14618
96941966	DE-SB-14618
96970074	DE-SB-8905
96970075	DE-SB-8906
KBJ029	DE-ES-0452
KBJR45	DE-AX-0447
KRSL18	K150052

DAIHATSU

	MOOG
271700	K150201
4504687282	DI-ES-2619
4504687283	DI-ES-2619
4504687285	DI-ES-2619

...DAIHATSU

	MOOG
4504687401	DI-ES-2502
4504687402	DI-ES-2502
4504687780	DI-ES-2619
4504687781	MI-ES-1629
4504687782	MI-ES-1629
4504687783	MI-ES-1629
4504687784	MI-ES-1629
4504697203	DI-ES-2619
45046B9080	DI-ES-10507
45046B9220	DI-ES-2619
45046B9320	DI-ES-10507
4504787280	DI-ES-2620
4504787281	DI-ES-2620
4504787282	DI-ES-2620
4504787780	DI-ES-2620
4504787781	DI-ES-1606
4504787782	DI-ES-1606
4504787783	DI-ES-1606
4504787784	DI-ES-1606
4504797203	DI-ES-2620
45047B9010	DI-ES-1606
45047B9070	DI-ES-10508
45047B9160	DI-ES-2620
45047B9270	DI-ES-10508
4546087401	DI-AX-2501
4546087401000	DI-AX-2501
4550387111	DI-AX-2295
4550387215	DI-AX-2481
4550387708	DI-AX-2295
4550397203	DI-AX-2480
4550397204	DI-AX-2482
4553510060	K150199
4553516030	K150199
4553526020	K150189
4553526030	K150189
4553587205	K150102
4553587401	K150201
4553587505	K150050
4553587506	K150050
4553587704	K150102
4553587705	K150206
4553587706	K150102
4553587707	K150202
4553587708	K150202
4553587709	K150199
4553587710	K150199
4553597202	K150189
45535G7202	K150189
4553687703	K150102
4553687706	K150102
4553687707	K150102
4806887706	DI-TC-1642
4806897202	DI-TC-2498
4806897203	DI-TC-2498
4806897203000	DI-TC-2498
48068B4010	DI-WP-10502

...DAIHATSU

	MOOG
48068B4010 (-)	DI-SB-10503
48068B4010 (-)	DI-SB-10504
48068B4011	DI-WP-10502
4806997202	DI-TC-2497
4806997203	DI-TC-2497
48069B4010	DI-WP-10501
48069B4010 (-)	DI-SB-10503
48069B4010 (-)	DI-SB-10504
48069B4011	DI-WP-10501
4860997203000	DI-TC-2497
4869387703	HY-SB-9770
4882297503	DI-LS-10505
4906897202	DI-TC-2498
4906997202	DI-TC-2497
5531122000	HY-SB-9770
5652802000	K150199

DODGE

	MOOG
05104075AA	AMGK7455
05133904AA	K150127
05139559AA	AMGK7455
05183761AD	FI-ES-10933
4684129	CH-SB-9583
4684418	CH-SB-9583
4694870	CH-SB-9583
47430044AA	AMGK7374
4766116AA	AMGK7374
476616AA	AMGK7374
5104073AA	ME-SB-7901
5104075AA	AMGK7455
5133904AA	K150127
5139559AA	AMGK7455
5272226	AMGK7375
68012176AA	ME-SB-5620
68141058AA	FI-ES-10933

FIAT

	MOOG
0344665	OP-SB-10084
05183761AD	FI-ES-10933
05960254	FI-SB-9666
07775940	FI-SB-9678
114509822	K150001
114509823	K150001
12756395	OP-SB-6992
12795024	OP-SB-6992
1300473080	FI-BJ-0513
1300473080	FI-BJ-7531
1300716080	CI-LS-3267
1302368080	FI-BJ-7530
1304641080	CI-SB-7967
1305551080	PE-SB-1311
1305552080	PE-SB-1313
1305782080	CI-SB-7141
1306003080	PE-ES-5042
1306716080	FI-ES-7529
1308600080	FI-WP-0109

...FIAT

	MOOG
1308601080	FI-WP-0108
1308664080	PE-LS-1048
1308694080	PE-SB-1137
1308759080	FI-WP-0111
1308760080	FI-WP-0110
1313056080	PE-SB-8784
1313083080	FI-TC-8871
1313084080	FI-TC-8872
1316735080	FI-TC-8871
1316736080	FI-TC-8872
1317238080	FI-WP-0111
1317239080	FI-WP-0110
1317240080	FI-WP-0109
1317241080	FI-WP-0108
1317389080	FI-TC-8871
1317390080	FI-TC-8872
1317425080	PE-LS-1048
13188763	OP-SB-10084
1320755080	CI-WP-3876
1320755080	FI-WP-0111
1320756080	CI-WP-3877
1320756080	FI-WP-0110
1320786080	FI-WP-0109
1320786080	FI-WP-3840
1320787080	FI-WP-0108
1320787080	FI-WP-0118
1322663080	FI-TC-8871
1322664080	FI-TC-8872
13239683	OP-SB-10084
13270705	OP-SB-10084
1331209080	CI-LS-2468
1331640080	FI-BJ-0512
1331641080	FI-BJ-0513
1331937080	CI-WP-3876
1331937080	FI-WP-0111
1331938080	FI-WP-0109
1331938080	FI-WP-3840
1331939080	CI-WP-3877
1331939080	FI-WP-0110
1331940080	FI-WP-0108
1331940080	FI-WP-0118
1333754080	FI-TC-8871
1333755080	FI-TC-8872
1338373080	PE-SB-1137
1339464080	CI-WP-3876
1339464080	FI-WP-0111
1339465080	FI-WP-3840
1339466080	CI-WP-3877
1339466080	FI-WP-0110
1339467080	FI-WP-0118
1346384080	CI-WP-2464
1346385080	CI-WP-2465
1351398080	PE-TC-8483
1351399080	PE-TC-8482
1352225080 (-)	CI-SB-5125
1352225080 (-)	CI-SB-5126

...FIAT	MOOG
1352226080 (-)	CI-SB-5125
1352226080 (-)	CI-SB-5126
1352227080 (-)	CI-SB-5125
1352227080 (-)	CI-SB-5126
1352228080 (-)	CI-SB-5125
1352228080 (-)	CI-SB-5126
1355449080	CI-LS-7322
1356060080	PE-TC-8483
1356061080	PE-TC-8482
1356065080	CI-TC-10887
1356066080	CI-TC-10888
1363095080	PE-TC-8483
1363096080	PE-TC-8482
1368628080	PE-TC-8483
1368629080	PE-TC-8482
1369943080	CI-AX-7320
1369943080S1	CI-AX-7320
1372870080	CI-AX-7320
1372870080S1	CI-AX-7320
1376345080	CI-ES-5120
1376346080	CI-ES-5119
138162131A	K150001
1400099680	CI-LS-7259
1400171280	CI-SB-13519
1401239480	CI-TC-7299
1401239480	CI-TC-8418
1401239580	CI-TC-7298
1401239580	CI-TC-8419
1440123280 (-)	CI-SB-13678
1440177280 (-)	CI-SB-13678
1471654080	FI-AX-7528
1479759080	CI-SB-4473
1497407080	CI-TC-7299
1497407080	CI-TC-8418
1497407080 (-)	CI-SB-7317
1497408080	CI-TC-7298
1497408080	CI-TC-8419
1497408080 (-)	CI-SB-7317
1541354	FI-AX-5694
1541355	FI-AX-5694
1603229	OP-AX-2083
1603229	OP-RK-15074
1603456	OP-AX-4160
1603543	OP-AX-4160
1607301380	CI-WP-3877
1607301480	CI-WP-3876
1609456	OP-AX-4160
164002103801	FI-WP-4686
164002103901	FI-WP-4685
164102101900	AL-BJ-7521
1903652	FI-ES-4070
193583600002	AL-ES-0034
24428002	OP-SB-3823
24457386	OP-SB-7935
24469643	OP-SB-4069
344537	OP-SB-10084

...FIAT	MOOG
350145	OP-SB-3822
350146	OP-SB-3823
350148	OP-SB-3823
350159	OP-SB-3823
350160	OP-SB-3822
352067	OP-BJ-4870
352087	OP-BJ-4870
352094	FI-TC-8871
3520C5	FI-TC-8871
3520C5 (-)	PE-SB-1311
3520H6	CI-WP-0601
3520X0 (-)	PE-SB-8484
352100	CI-WP-0600
352164	FI-TC-8872
352164 (-)	PE-SB-1313
352183	FI-TC-8872
352185	FI-TC-8872
3521C9	FI-TC-8872
3521H0	PE-SB-1312
3521H1	PE-SB-1312
3521T2 (-)	PE-SB-8484
352357	OP-SB-1384
352364	OP-SB-1384
352380	FI-SB-5435
352393	PE-SB-1138
36020064	K150071
36020065	K150071
36020066	K150071
36020108	K150067
3812C0	CI-DS-3366
3812F0	CI-AX-5169
381784	CI-ES-8975
381785	CI-ES-8976
381786	CI-ES-8975
381787	CI-ES-8976
405909	PE-ES-5042
406618	K150018
406619	K150018
406670	K150227
4097451	FI-BJ-0262
4102138	FI-ES-0248
4104085	FI-ES-0248
4104861	FI-BJ-0262
4109626	FI-ES-0260
4140985	FI-BJ-0262
4150178	FI-BJ-3116
4168857	FI-DS-0259
4193224	FI-ES-0261
4219839	FI-AX-3113
4226335	FI-TC-0255
423319	OP-SB-6992
423320	OP-SB-4069
4239458	K150001
4239459	K150001
4241428	FI-TC-8872
4242581	FI-ES-0254

...FIAT	MOOG
4254278	FI-ES-0254
4254519	FI-ES-0252
4254520	FI-ES-0252
4254523	FI-ES-0254
4257019	FI-ES-0254
4257066	FI-ES-0252
4264175	FI-ES-3121
4264735	FI-ES-3121
4289458	K150001
4311667	FI-AX-3113
4318655	FI-AX-3113
4322913	FI-AX-3105
4327141	FI-DS-0259
4327142	FI-ES-0261
4327143	FI-ES-0261
4327144	FI-ES-0260
4331968	FI-SB-3171
4332457	FI-TC-0253
4336779	FI-ES-4078
4337760	FI-TC-0255
4338056	FI-TC-0253
4339248	PE-SB-6835
4343760	FI-ES-0260
4343762	FI-ES-0261
4361667	FI-ES-0252
4361669	FI-ES-0252
4362467	FI-TC-0253
4362470	FI-TC-0253
4364092	FI-TC-0255
4364095	FI-TC-0253
4365569	FI-BJ-3116
4371155	K150001
4371156	K150001
4388159	FI-BJ-4077
4391813	PE-TC-5036
4402277	FI-ES-3119
4402360	FI-TC-4063
4402361	FI-TC-4063
4402649	FI-BJ-13405
4402649	FI-BJ-3118
4402672	FI-TC-4674
4408138	FI-TC-4673
444160	OP-SB-6846
444161	OP-SB-7935
4443201	FI-ES-0254
4553505010	K150173
4640268	FI-WP-7525
46402681	FI-WP-7525
46402682	FI-WP-7524
46402683	FI-WP-7525
46402684	FI-WP-7524
46402825	AL-SB-10834
46407372	FI-WP-7502
46407373	FI-WP-7501
46409095	FI-WP-0948
46409096	FI-WP-0947

...FIAT	MOOG
46413122	FI-LS-0048
46414183	FI-SB-9693
46414184	FI-SB-9694
46414734	LN-WP-4405
46414735	LN-WP-4406
46420429	FI-ES-2507
46420430	FI-ES-2508
46421522	FI-SB-2505
46423822	FI-WP-7504
46423823	FI-WP-7503
46429834	FI-TC-6564
46429834	FI-WP-7525
46429835	FI-TC-6565
46429835	FI-WP-7524
464300003	FI-WP-7524
46430002	FI-TC-6564
46430002	FI-WP-7525
46430003	FI-TC-6565
46430003	FI-WP-7524
46437959	FI-BJ-0049
46452741	AL-SB-9692
46454595	FI-WP-2519
46454595 (-)	FI-SB-2520
46454595 (-)	FI-SB-2521
46454596	FI-WP-2509
46454596 (-)	FI-SB-2520
46454596 (-)	FI-SB-2521
46454597	FI-WP-0239
46454597 (-)	FI-SB-2522
46454597 (-)	FI-SB-2523
46454598	FI-WP-0240
46454598 (-)	FI-SB-2522
46454598 (-)	FI-SB-2523
46454599	FI-BJ-0049
46456189	FI-ES-0241
46456660	FI-ES-0242
46459719	FI-WP-0948
46459720	FI-WP-0947
46459723	FI-RK-3827
46462049	LN-LS-2678
46462626	AL-TC-8867
46462626	AL-WP-7527
46462627	AL-TC-8868
46462627	AL-WP-7526
46474556	AL-TC-8867
46474556	AL-TC-8868
46474556	AL-WP-7526
46474556	AL-WP-7527
46474557	AL-TC-8868
46474557	AL-WP-7526
46476755	FI-SB-4454
46519893	FI-WP-0948
46519894	FI-WP-0948
46519898	FI-WP-0947
46522142	FI-WP-1462
46525407	FI-WP-1463

...FIAT	MOOG
46527567	FI-ES-2512
46539000	FI-WP-4173
46539001	FI-WP-4172
46539278	FI-WP-0239
46539279	FI-WP-0240
46543045	FI-BJ-0936
46545660	FI-WP-0461
46545660 (-)	FI-SB-2207
46545661	FI-SB-2208
46545661	FI-WP-0462
46545743	FI-LS-0048
46545749	LN-LS-13578
46546774	FI-WP-2509
46546775	FI-WP-2519
46546776	FI-WP-0240
46546777	FI-WP-0239
46551732	FI-WP-0461
46551790	FI-WP-0462
46555183	AL-SB-6628
46736463 (-)	LN-SB-6691
46738807	FI-SB-13672
46741920	FI-SB-10509
46745364	FI-ES-0242
46745365	FI-ES-0241
46746544	FI-SB-10963
46748578	FI-SB-2514
46748579	FI-SB-2515
46748580	FI-WP-4173
46748581	FI-WP-4172
46761279	FI-SB-10509
46764746	FI-WP-1463
46764746 (-)	FI-SB-7758
46764746 (-)	FI-SB-7759
46764747	FI-WP-1462
46764747 (-)	FI-SB-7758
46764747 (-)	FI-SB-7759
46767262	FI-SB-14544
46767267	FI-LS-2111
46767267	FI-LS-8783
46777741	FI-WP-4173
46777742	FI-WP-4172
46779293	FI-BJ-0936
46779293	FI-BJ-4174
46790552	FI-SB-13672
46794065	FI-WP-4173
46794066	FI-WP-4172
46799278	FI-LS-2111
46799278	FI-LS-8783
46813841	FI-WP-4173
46813842	FI-WP-4172
46842581	FI-BJ-0936
46842581	FI-BJ-4174
4883079J00	FI-AX-10883
4883079J10	FI-AX-5156
50006261	FI-ES-0446
50006262	FI-ES-0446

...FIAT	MOOG
500310933	FI-ES-4071
503178	CI-SB-10082
503179	CI-SB-10083
503529	CI-SB-9696
503529	CI-SB-9698
503538	CI-SB-9696
503538	CI-SB-9698
503816	CI-SB-9698
503817	CI-SB-9696
503818	CI-SB-9684
503819	CI-SB-9682
503841	CI-SB-9684
503842	CI-SB-9682
503868	CI-SB-10082
50509339S1	AL-SB-1720
50510134	FI-SB-13488
50513442	AL-WP-10780
50513442 (-)	AL-BJ-10774
50513442 (-)	AL-SB-10777
50513442 (-)	AL-SB-10778
50513444	AL-WP-10779
50513444 (-)	AL-BJ-10774
50513444 (-)	AL-SB-10777
50513444 (-)	AL-SB-10778
50515274	AL-LS-10443
50515275	AL-LS-10444
50515276	FI-LS-4548
50519427 (-)	AL-AX-10998
50520352	AL-ES-10781
50520353	AL-ES-10782
50521045	AL-WP-10780
50521046	AL-WP-10779
50521707	FI-SB-13488
50531823	FI-LS-4548
50700443	FI-SB-2510
50700464	FI-LS-2371
50700778	FI-SB-2511
50700779	FI-TC-8874
50700779	FI-WP-0938
50700797	FI-TC-8873
50700797	FI-WP-0939
507007979	FI-TC-8874
507007979	FI-WP-0938
50700941	FI-LS-2371
50701178	FI-SB-10506
50701813	LN-LS-13578
50703128	FI-TC-1964
50703128 (-)	FI-SB-3829
50703129	FI-TC-1963
50703129 (-)	FI-SB-3829
50703231	LN-TC-4835
50703231 (-)	LN-SB-4840
50703231 (-)	LN-SB-4864
50703232	LN-TC-4800
50703232 (-)	LN-SB-4840
50703232 (-)	LN-SB-4864

...FIAT	MOOG
50703271	FI-SB-10511
50703296	FI-LS-3830
50704306	AL-TC-5099
50704306 (-)	AL-SB-5103
50704306 (-)	AL-SB-5106
50704307	AL-TC-5100
50704307 (-)	AL-SB-5103
50704307 (-)	AL-SB-5106
50704361	AL-LS-5094
50704362	AL-LS-5093
50704671	FI-LS-8794
50704947	AL-TC-5097
50704947 (-)	AL-SB-5101
50704947 (-)	AL-SB-5102
50704948	AL-TC-5098
50704948 (-)	AL-SB-5101
50704948 (-)	AL-SB-5102
50705083	FI-TC-9057
50705083	FI-WP-5692
50705083 (-)	FI-SB-13373
50705084	FI-TC-9058
50705084	FI-WP-5693
50705084 (-)	FI-SB-13373
50705464	FI-TC-9057
50705464	FI-WP-5692
50705464	FI-WP-7420
50705464 (-)	FI-BJ-5414
50705465	FI-TC-9058
50705465	FI-WP-5693
50705465	FI-WP-7421
507054665 (-)	FI-BJ-5414
50705629	FI-BJ-4958
50705702	AL-LS-5095
50705943	FI-SB-10506
50705944	FI-SB-13721
50706598	AL-LS-5096
50706954	AL-SB-5104
50706955	AL-SB-5105
50706990	AL-LS-5094
50706991	AL-LS-5093
50708823	FI-TC-7412
50708823 (-)	FI-SB-5697
50708823 (-)	FI-SB-5698
50708824	FI-TC-7413
50708824 (-)	FI-SB-5697
50708824 (-)	FI-SB-5698
50709579	FI-TC-7412
50709580	FI-TC-7413
50710620	FI-TC-7413
50710621	FI-TC-7412
5081L1 (-)	CI-LS-7321
5081N9 (-)	CI-LS-7321
508738	PE-DS-6970
513172	CI-SB-7966
513173	CI-SB-7967
515261	CI-SB-4473

...FIAT	MOOG
515262	CI-SB-7974
51701045	FI-LS-0048
51704008	CI-LS-7297
51712407	FI-WP-4173
51712408	FI-WP-4172
51717000	FI-LS-2111
51717001	FI-LS-2111
51717001	FI-LS-8783
51727863	FI-WP-5202
51727863 (-)	FI-SB-5204
51727865	FI-WP-5201
51727865 (-)	FI-SB-5203
51741130	OP-LS-2080
51747323	FI-WP-4173
51747324	FI-WP-4172
51748652	OP-TC-1956
51748653	OP-TC-1955
51748740	OP-TC-4081
51748740 (-)	OP-SB-13378
51749713 (-)	AL-SB-0503
51754198	AL-SB-6687
51755681	OP-TC-13621
51755681 (-)	FI-SB-15440
51755681 (-)	FI-SB-15441
51755688	OP-SB-10084
51755689	OP-SB-10084
51764470	FI-WP-4173
51764471	FI-WP-4172
51769073	FI-WP-4173
51769074	FI-WP-4172
51772988	FI-WP-2110
51772989	FI-WP-2110
51772992	FI-WP-2109
51772993	FI-WP-2109
51783009	OP-TC-4081
51783009 (-)	OP-SB-10094
51783009 (-)	OP-SB-13378
51783056	FI-WP-3958
51783057	FI-WP-3959
51783623	FI-SB-8790
51785488	PE-SB-10500
51786814	FI-AX-5694
51786815	FI-AX-5694
51795260	FI-WP-7420
51795269	FI-LS-2371
51795454	AL-LS-5094
51795455	AL-LS-5093
51796664	FI-SB-10511
51801136	FI-LS-2371
51803162	OP-TC-4081
51803183	OP-LS-2080
51804551	FI-SB-10510
51805870	FI-LS-4548
51810124	FI-LS-10828
51810664	FI-WP-8476
51810664 (-)	FI-BJ-8357

...FIAT	MOOG
51810664 (-)	FI-SB-8983
51810664 (-)	FI-SB-8984
51810665	FI-WP-8475
51810665 (-)	FI-SB-8983
51810665 (-)	FI-SB-8984
51815479	CI-LS-7297
51815480	CI-LS-7297
51817623	AL-TC-8105
51817624	AL-TC-8104
51827736	FI-WP-7420
51827736 (-)	FI-SB-13373
51827737	FI-WP-7421
51827737 (-)	FI-SB-13373
51832937	FI-WP-1463
51832938	FI-WP-1462
51834094	AL-TC-10670
51839039	FI-WP-3958
51839040	FI-WP-3959
51839218	LN-TC-4835
51839219	LN-TC-4800
51840600	FI-SB-8781
51842192	FI-WP-0461
51842193	FI-WP-0462
51848645	FI-LS-8086
51849600	FI-WP-13612
51849602	FI-WP-13611
51856869	FI-SB-10506
51856870	FI-SB-13721
51856872	FI-LS-3830
51856959	FI-LS-8794
51857021	FI-TC-7412
51857022	FI-TC-7413
51857133	FI-TC-1964
51857134	FI-TC-1963
51866700	FI-WP-4173
51866701	FI-WP-4172
51874461	FI-WP-3958
51874462	FI-WP-3959
51875886	FI-AX-5694
51875887	FI-AX-5694
51885660	FI-TC-14076
51885660 (-)	FI-SB-14965
51885735	FI-SB-14965
51885737	FI-TC-14075
51885737 (-)	FI-SB-14965
51892272	FI-WP-3959
51892273	FI-WP-3958
51895366	FI-WP-3958
51895367	FI-WP-3959
51898527	FI-LS-8086
51928527	FI-WP-13612
51928527 (-)	FI-BJ-13610
51928536	FI-WP-13611
51928536 (-)	FI-BJ-13610
51928536/527 (-)	FI-SB-13613
51928536/527 (-)	FI-SB-13614

...FIAT	MOOG
51932035	FI-WP-8475
51932036	FI-WP-8476
51935875	FI-LS-8086
51939753 (-)	FI-SB-15400
51939754 (-)	FI-SB-15403
51939949	FI-LS-14979
51959820 (-)	FI-SB-15400
51959820 (-)	FI-SB-15403
51961341 (-)	FI-SB-15400
51961341 (-)	FI-SB-15403
542920	AL-BJ-3931
55700695	FI-SB-10510
55700751	FI-SB-5439
55700753	FI-LS-4548
55703232	FI-SB-5435
55703232	PE-SB-4963
55703627	FI-WP-3958
55703629	FI-WP-3959
5880794	FI-BJ-0262
5882282	FI-TC-0255
5892196	AL-SB-2391
5927293	FI-SB-1323
5939683	FI-BJ-13405
5939683	FI-BJ-3118
5939683	FI-WP-4671
5939685	FI-BJ-13405
5939685	FI-BJ-3118
5939685	FI-WP-4672
5958244	FI-AX-3120
5958246	FI-ES-4079
5958247	FI-ES-4079
5960036	FI-ES-4082
5960037	FI-ES-4082
5960321	FI-AX-4080
5960834	FI-ES-4085
5960835	FI-ES-4085
5962654	FI-ES-4084
5962655	FI-ES-4084
5962774	FI-ES-4084
5962775	FI-ES-4084
5966980	LN-ES-3159
5969335	FI-BJ-0262
5983404	FI-ES-4079
5983406	FI-ES-4079
5995267	FI-ES-0260
5995268	FI-ES-0261
5995503	FI-BJ-13405
5995503	FI-TC-4673
60501394	AL-SB-1288
60507910	AL-AX-1647
60510362	AL-WP-1621
60510363	AL-WP-1612
60511622	FI-AX-1856
60570365	AL-LS-1619
60570627	FI-LS-0441
60570731	AL-SB-9688

...FIAT	MOOG
60570732	AL-SB-9686
60588843	FI-WP-4685
60588844	FI-WP-4686
60608979	AL-ES-0265
60608980	AL-DS-7511
60608980	AL-ES-7513
60612317 (-)	FI-BJ-7517
60612435	AL-LS-0266
60612436	AL-LS-0263
60613575	AL-LS-7542
60614514	AL-LS-0043
60620565	AL-SB-0500
60620565	AL-SB-7338
60620566	AL-SB-0499
60620566	AL-SB-7339
60622623	AL-TC-7983
60622624	AL-TC-7984
60625029	AL-LS-0052
60627290	AL-SB-2398
60627290	AL-TC-8865
60627290	AL-WP-1437
60627291	AL-TC-8866
60627291	AL-WP-1436
60628255	AL-LS-3297
60628284	AL-LS-3296
60628294	AL-LS-7410
60628295	AL-LS-7411
60628303	AL-WP-2394
60628303 (-)	AL-SB-2402
60628307	AL-WP-2395
60628307 (-)	AL-SB-2402
60629903	AL-TC-3624
60629903 (-)	AL-SB-0527
60630757	AL-LS-1754
60642465	AL-TC-0056
60642465	AL-TC-8079
60651934	AL-TC-7984
60651935	AL-TC-7983
60652167	AL-TC-3623
60652465	AL-SB-0501
60652466	AL-SB-0502
60652466	AL-SB-7340
60652466	AL-TC-0057
60652466	AL-TC-8080
60657245	AL-TC-10669
606572456 (-)	AL-SB-1721
60657246	AL-TC-10670
60666020	AL-TC-10672
60666021	AL-SB-2399
60666021	AL-SB-6688
60666021	AL-TC-10671
60682636	AL-SB-10834
60686891 (-)	AL-SB-7341
60686892 (-)	AL-SB-7341
60695895	AL-SB-2396
60695895	AL-SB-2397

...FIAT	MOOG
60695895S1	AL-SB-2396
60695895S3	AL-SB-2397
607060026	K150026
60710237	AL-DS-7512
60801528	FI-WP-4685
60801528	FI-WP-4686
60801528 (-)	FI-BJ-3157
60801529	FI-WP-4685
60801529	FI-WP-4686
60806398	AL-SB-9686
60806398	FI-SB-9693
60806408	AL-SB-1233
60807583	FI-LS-0441
60808557	FI-SB-6627
60809242	FI-LS-0441
60809494	FI-ES-4676
60809752	FI-SB-9693
60809753	FI-SB-9694
60809813	AL-TC-8867
60809813	AL-WP-7527
60809814	AL-TC-8868
60809814	AL-WP-7526
60811372	FI-SB-9693
60811373	FI-SB-9694
60812796	AL-TC-8867
60812796	AL-WP-7527
60812797	AL-TC-8868
60812797	AL-WP-7526
60815431	FI-WP-0947
60815432	FI-WP-0948
6407373	FI-WP-7501
68141058AA	FI-ES-10933
7076231	FI-AX-3853
7077206	FI-AX-4868
7079340	K150067
7079382	FI-AX-1751
7079388	FI-AX-2518
7081835	FI-BJ-0936
7081835	FI-BJ-4174
7081842	FI-AX-4197
7081851	FI-AX-4198
7082812	FI-BJ-0936
7082812	FI-BJ-4174
71737047	FI-TC-8871
71737048	FI-TC-8872
71740107	OP-SB-2812
71740112	OP-LS-3815
71740113	OP-SB-7935
71742688	FI-LS-5159
71742731	FI-WP-5158
71742731 (-)	FI-SB-5161
71742732	FI-WP-5157
71742732 (-)	FI-SB-5161
71742733	FI-SB-5160
71742770	FI-ES-5155
71747915	FI-WP-7504

...FIAT	MOOG	...FIAT	MOOG	...FIAT	MOOG	...FIAT	MOOG
71747916	FI-WP-7503	7669756	FI-ES-4079	77366166	FI-ES-14640	93501180	FI-WP-7502
71750067	FI-ES-5155	7669756	FI-ES-4082	77366698	FI-ES-15163	93501180 (-)	AL-SB-3170
71750149	FI-WP-5158	7673581	FI-SB-1324	77366699	FI-ES-15164	93501180 (-)	FI-SB-1396
71750211	FI-WP-5157	7673582	FI-SB-1323	77367001	FI-ES-2516	93501181	FI-WP-7501
71768151	FI-WP-5157	7674701	FI-SB-4538	77367002	FI-ES-2517	93501485	FI-TC-8873
7520850	FI-SB-8793	7674825	FI-TC-1620	7747956	FI-SB-8782	93501485	FI-WP-0939
7536271	FI-TC-1620	7674825	FI-TC-4666	7750977	FI-WP-7525	93501486	FI-TC-8874
7543028	FI-ES-0444	7678717	FI-ES-4676	7750978	FI-WP-7524	93501486	FI-WP-0938
754376	FI-TC-4666	7683363	FI-SB-9693	7750982	FI-SB-6622	93501487	CI-WP-2464
7543760	FI-TC-4666	7683364	FI-SB-9694	7750983	FI-SB-6623	93501488	CI-WP-2465
7544738	FI-SB-4465	7690960	FI-ES-0446	77509870	FI-WP-7524	93501837	FI-BJ-4958
7545583	FI-ES-4676	7695185	PE-TC-5037	7750990	FI-SB-6626	93511181 (-)	AL-SB-3170
7558962	FI-TC-4063	7695185	PE-TC-5039	7752285	FI-ES-4684	93800662	FI-ES-4070
7560331	FI-ES-4079	7695186	PE-TC-5038	7755671	FI-SB-8801	93801624	FI-SB-13284
756437	FI-TC-4666	7695186	PE-TC-5040	7756218	FI-SB-8800	93802209	FI-ES-4071
75643760	FI-TC-4666	7695190	PE-TC-5037	7757874	FI-SB-8787	93802242	FI-BJ-4072
7567282	PE-TC-5037	7695190	PE-TC-5039	7760424	FI-SB-6627	93802248	FI-SB-13283
7567282	PE-TC-5039	7695191	PE-TC-5038	7760426	FI-SB-6763	93804059	FI-ES-4070
7567283	PE-TC-5040	7695191	PE-TC-5040	7769900	FI-TC-2052	93804060	FI-ES-4071
7567284	PE-BJ-4087	7700064	K150046	7769901	FI-TC-2053	93807545	FI-BJ-4072
7576731	PE-TC-5037	7701491	FI-AX-0087	7775343	FI-SB-1589	93807641	FI-SB-13286
7576731	PE-TC-5039	7705615	FI-WP-4671	7775344	FI-SB-1590	9403817738	CI-ES-7316
7576732	PE-TC-5038	7705616	FI-WP-4672	7777239	FI-WP-7504	9404059080	PE-ES-5042
7576732	PE-TC-5040	7719062	FI-RK-3591	7777240	FI-WP-7503	9404059098	PE-ES-5042
7583242	K150001	77362278	CI-ES-2460	7780450	FI-SB-6624	9404059580	PE-ES-5042
7583243	K150001	77362279	CI-ES-2466	7820040638	K150173	9404066418	K150087
7584628	FI-ES-0444	77362280	CI-AX-2467	82275011	FI-BJ-3116	9471000965	CI-DS-3366
7591215	FI-ES-4676	77362380	LN-AX-4758	82315790	FI-ES-0261	9566950880	CI-RK-15010
7591216	FI-ES-4675	77362381	LN-ES-4771	82346006	LN-BJ-3153	9566950880	PE-AX-5047
7591277	FI-TC-4666	77362502	FI-AX-5092	82351945	LN-ES-3154	96048214	CI-DS-3366
7592476	LN-SB-6684	77362503	FI-ES-5091	82368166	K150001	9750000280	K150018
7595190	PE-TC-5037	77362506	FI-AX-3826	82387676	FI-AX-1856	9750000380	K150018
7601057	FI-WP-7502	77362507	FI-ES-2516	82387676	FI-ES-3156	9750001180	PE-AX-3696
7601062	FI-WP-7501	77362508	FI-ES-2517	82388433	AL-SB-1293	9750079980	FI-ES-4078
7601064	FI-SB-1585	77363706	AL-ES-5417	82398170	FI-BJ-3157	9790002680	PE-AX-3696
7601064	FI-SB-1586	77363707	AL-ES-5418	82406867	FI-WP-4685	98810140	FI-WP-5201
7601064	FI-SB-1596	77363712	OP-ES-2082	82406867 (-)	FI-BJ-3157	98845024	FI-AX-2504
7601065	FI-SB-1587	77363713	OP-ES-2081	82406868	FI-WP-4686	98845025	FI-AX-2504
7601068	FI-SB-1396	77363829	CI-ES-8975	824068867	FI-WP-4685	98845026	FI-AX-3974
7601068	FI-SB-1579	77363829	OP-ES-4921	824068868	FI-WP-4686	98845030	FI-ES-2512
7601261	FI-TC-4674	77363830	CI-ES-8976	82446499	FI-BJ-3157	98845031	FI-ES-0242
7601502	AL-SB-9686	77363830	OP-ES-4922	82461081	FI-WP-7504	98845032	FI-ES-0241
7601502	FI-SB-9693	77364009	CI-ES-5120	82461082	FI-WP-7503	98845034	K150216
7601502	FI-SB-9694	77364253	CI-ES-5119	82463956	LN-BJ-4677	98845878	FI-AX-10827
7601642	AL-SB-1233	77364568	CI-ES-8975	82480099	LN-BJ-0220	9915564	K150067
7601646	FI-SB-6627	77364568	OP-ES-4921	82480099	LN-ES-1770	9938779	K150026
7601647	FI-LS-0441	77364569	CI-ES-8976	9050452	AL-AX-1681	9938779R	K150026
7625714	AL-SB-2391	77364569	OP-ES-4922	9191181	OP-SB-10084	9939555	K150028
7633721	FI-AX-3120	77364750	AL-AX-5416	9191188	OP-SB-3822	9939574	K150001
7635775	FI-SB-9670	77364750	AL-RK-15075	93189022	OP-AX-4160	9939675	FI-AX-1232
7636995	FI-TC-7523	7736514	FI-TC-2042	93191295	OP-SB-10084	9940260	FI-AX-1856
7636996	FI-TC-7522	7736515	FI-TC-2045	93300662	FI-ES-4070	9941077	K150041
7645160	K150165	77365223	FI-ES-8785	93500972	FI-TC-8871	9941186	FI-AX-1856
7658273	FI-AX-7508	77365224	FI-ES-8786	93500973	FI-TC-8872	9941625	FI-AX-1232
7663114	FI-RK-4006	77365815	FI-ES-12625	93501144	AL-TC-8867	9943623	K150041
7663115	FI-RK-4006	77366165	FI-ES-14639	93501144	AL-WP-7527	9943835	K150071

...FIAT	MOOG
9944452	AL-AX-1681
9945562	FI-AX-0086
9945564	K150067
9945836	FI-AX-7528
9945837	K150119
9945837	K150120
9946815	LN-AX-3904
9946816	K150166
9946947	K150165
9946948	FI-AX-0087
9946949	FI-ES-4684
9946982	K150118
9947361	AL-AX-1681
9947368	AL-AX-1681
9947369	K150166
9947435	FI-ES-4675
9947436	FI-ES-4676
9947437	FI-ES-4675
9947438	AL-ES-7513
9947438	FI-ES-4676
9947440	FI-ES-2507
9947441	FI-ES-2508
9947713	CI-RK-15010
9947713	FI-AX-1461
9947713	PE-AX-5047
9947714	FI-ES-2512
9947718	AL-AX-1699
9947720	FI-ES-3525
9947838	FI-ES-4676
9947919	AL-ES-0050
9947920	AL-ES-0051
9947923	AL-AX-1223
9947926	FI-ES-3525
9948288	FI-ES-4079
9948288	FI-ES-4082
9948292	FI-AX-4431
9948293	FI-ES-2512
9948296	LN-AX-2677
9948297	AL-AX-1435
9948343	FI-AX-1839
9948344	K150165
9949216	K150217
9949217	FI-AX-2503
9949218	FI-ES-0937
9950452	AL-AX-1681
9950672	FI-ES-4676
9950775	FI-ES-3525
9951290	K150166
9983325	FI-AX-1558
HB16213101	K150001
HB16213200	K150001
K05183761AD	FI-ES-10933
K68141058AA	FI-ES-10933
SE022162406A	FI-ES-4082
SE127156110A	FI-TC-0253
SE127162449A	FI-AX-4080

...FIAT	MOOG
SE141140104A	FI-BJ-7510
SE141162449A	FI-AX-4080

FORD	MOOG
1 683 481	FD-SB-13761
1 810 326	FD-SB-13761
1000445	FD-SB-1344
1000445	FD-SB-1345
1001395	VO-DS-8256
1001396	VO-DS-8256
1001397	VO-DS-8257
1001398	VO-AX-0358
1001398	VO-RK-15009
1001713	VO-SB-6814
1002513	FD-SB-9605
1003609	FD-SB-6664
1004011	FD-SB-1351
1004018	FD-LS-0090
1007602	VO-WP-0450
1007602	VO-WP-0451
1009591	VO-LS-0318
1009596	FD-WP-4149
1009649	VO-SB-6815
1010037	FD-SB-1350
1011665	K150172
1011857	FD-DS-4152
1011857	FD-ES-4148
1011857+104401	FD-DS-4152
1011858	FD-DS-4151
1011858	FD-ES-4147
1011858+101440	FD-DS-4151
1012632	VO-WP-0450
1012632	VO-WP-0451
1012814	K150144
1013794	FD-SB-9605
10144014	FD-DS-4151
1014654	FD-SB-1351
1015260	FD-WP-4150
1015263	FD-WP-4141
1015264	FD-WP-4149
1015264	FD-WP-4150
1015265	FD-WP-4142
1015546	FD-ES-4105
1015546	FD-ES-4106
1015547	FD-ES-4105
1015547	FD-ES-4106
1016439	FD-SB-4060
1020174	FD-ES-4148
1020174 (-)	FD-AX-4153
1020175	FD-ES-4147
1020175 (-)	FD-AX-4153
1020214	FD-WP-4141
1020220	FD-WP-4142
1020496	VO-DS-8256
1020497	VO-DS-8257
1021219	FD-WP-4150

...FORD	MOOG
1021220	FD-WP-4149
1021220	FD-WP-4150
1022358	FD-LS-2016
1023026	FD-WP-4144
1023028	FD-WP-4136
1023058	FD-SB-1347
1023149	FD-LS-5751
1023256	FD-LS-5751
1023265	FD-LS-5751
1023587	FD-SB-9617
1024130	FD-AX-0007
1028438	FD-WP-0163
1028443	FD-WP-0162
1029836	FD-AX-2382
1030025	FD-BJ-4134
1030027	FD-BJ-4133
1030277	FD-WP-4143
1030277	FD-WP-4144
1030277 (-)	FD-BJ-4115
1030278	FD-WP-4143
1030278	FD-WP-4144
1030278 (-)	FD-BJ-4115
1032099	FD-WP-0163
1032100	FD-WP-4139
1032101	FD-WP-0162
1032102	FD-WP-0722
1032102	FD-WP-4139
1032102	FD-WP-4140
1032567	FD-ES-4125
1032689	FD-ES-4125
1033616	FD-BJ-4122
1034417	FD-ES-4125
1035515	FD-SB-6665
1035690	FD-ES-4156
1035691	FD-ES-4155
1035911	FD-LS-2016
1035929	FD-SB-1344
1035929	FD-SB-1345
1039001	FD-SB-9636
1039103	FD-ES-4107
1039511	FD-LS-2016
1039806	FD-WP-0722
1041979	FD-SB-4467
1043158	FD-WP-4143
1043158	FD-WP-4144
1043158 (-)	FD-BJ-4115
1043159	FD-WP-4143
1043159	FD-WP-4144
1043159 (-)	FD-BJ-4115
1044014	FD-AX-4153
1044571	VO-SB-1195
1045413	FD-LS-2368
1045655	FD-WP-4150
1045656	FD-WP-4149
1045656	FD-WP-4150
1046038	FD-WP-0843

...FORD	MOOG
1046039	FD-WP-4141
1046072	FD-WP-0844
1046073	FD-WP-4142
1046278	FD-WP-4141
1046279	FD-WP-4142
1046433	FD-SB-12696
104644	FD-WP-4139
1046444	FD-WP-0163
1046445	FD-WP-4139
104645	FD-WP-4139
1046455	FD-WP-0162
1046458	FD-WP-4140
1046461	FD-WP-0722
1046501	FD-WP-0163
1046502	FD-WP-0162
1047145	FD-ES-4107
1047797	FD-BJ-4134
1047798	FD-BJ-4133
1047852	FD-BJ-4133
1047853	FD-BJ-4122
1054209	FD-LS-2016
1054980	FD-WP-4135
1054980 (-)	FD-WP-4135
1054981	FD-WP-4136
1054982	FD-WP-4139
1054983	FD-WP-4140
1054984	FD-WP-0587
1054985	FD-WP-0588
1054986	FD-WP-0564
1054987	FD-WP-0565
1054988	FD-BJ-4122
1054988	FD-WP-4132
1054989	FD-BJ-4134
1055191	FD-SB-1350
1055194	FD-BJ-4130
1058279	FD-WP-4126
1058280	FD-WP-4127
1058377	VO-ES-8258
1058378	VO-ES-8258
1058380	VO-ES-8259
1061570	FD-SB-1353
1061631	FD-BJ-0425
1061631	FD-LS-0090
1061631	FD-LS-0950
1061659	FD-TC-0951
1061659 (-)	FD-SB-10674
1061660	FD-TC-10175
1061666	FD-TC-7260
1061668	FD-TC-0952
1061668 (-)	FD-SB-10853
1061670	FD-SB-0191
1061702	FD-LS-0122
1063223	FD-WP-0843
1063226	FD-SB-1351
1063226	FD-WP-4141
1063236	FD-WP-4150

...FORD	MOOG
1063246	FD-WP-0844
1063248	FD-SB-1351
1063248	FD-WP-4142
1063255	FD-WP-4149
1063255	FD-WP-4150
1063372	FD-SB-1351
1063985	FD-WP-0163
1063986	FD-WP-0162
1063987	FD-WP-0721
1063987	FD-WP-4139
1063988	FD-WP-0722
1063988	FD-WP-4140
1064128	FD-TC-7260
1064128 (-)	FD-SB-13428
1064128 (-)	FD-SB-13429
1067818	FD-LS-0090
1067819	FD-SB-1352
1067918	FD-SB-1352
1070337	FD-WP-4135
1070338	FD-WP-4136
1070339	FD-WP-4139
1070340	FD-WP-4140
1071336	FD-LS-0090
1071683	FD-WP-4141
1071690	FD-SB-1351
1071690	FD-WP-0843
1071694	FD-WP-4150
1071701	FD-WP-4142
1071702	FD-SB-1351
1071702	FD-WP-0844
1072279	FD-WP-4149
1072279	FD-WP-4150
1072435	FD-LS-5751
1072446	FD-LS-5751
1072446S1	FD-LS-5751
1072447	FD-LS-5751
1072453	FD-TC-7992
1073214	FD-WP-0403
1073215	FD-WP-0404
1073217	FD-SB-0190
1073249	FD-SB-3659
1074282	FD-SB-1347
1074282	FD-SB-1348
1074305	FD-ES-1535
1074306	FD-ES-1536
1085517	K150193
1085520	FD-AX-1537
1085520	FD-RK-15055
1085520	FD-RK-15069
1087177	FD-SB-9652
1090730	FD-WP-0403
1090738	FD-WP-0404
1092376	VO-DS-8256
1092377	VO-ES-8258
1092380	VO-ES-8259
1092382	VO-DS-8257

...FORD	MOOG
1093986	FD-SB-1345
1093988	FD-SB-1345
1097316	FD-ES-4156
1097323	FD-ES-4155
1097918	FD-SB-1352
1102948	FD-WP-4143
1102948	FD-WP-4144
1102949	FD-WP-4143
1102949	FD-WP-4144
1102950	FD-SB-5753
1105233	FD-SB-15694
1105524	FD-TC-0952
1106269	FD-LS-0950
1106269	FD-LS-4114
1107013	FD-ES-1535
1107015	FD-ES-1536
1107068	FD-LS-0090
1107068	FD-LS-0950
1107069	FD-LS-0090
1107069	FD-LS-0950
1111156	VO-BJ-0319
1111410	FD-WP-0721
1111411	FD-WP-4132
1111412	FD-WP-0722
1111413	FD-WP-4131
1111769	FD-LS-0090
1111769	FD-LS-0950
1116578	FD-WP-0716
1116579	FD-WP-0715
1116602	FD-SB-7201
1116608	FD-TC-13360
1117698	FD-LS-0808
1117698	FD-LS-3286
1117800	FD-LS-0469
1117801	FD-LS-3274
1117859	FD-LS-5446
1118695	FD-SB-7201
1118920	FD-LS-5444
1118921	FD-LS-5446
1121508	VO-DS-8256
1121509	VO-AX-0358
1121509	VO-DS-8257
1121509	VO-RK-15009
1122566	FD-TC-15369
1124418	FD-SB-7973
1127646	FD-LS-0808
1127648	FD-LS-0469
1128483	FD-WP-0716
1128725	FD-SB-6621
1130273	FD-LS-0090
1130452	FD-LS-3274
1131386	FD-WP-0716
1135077	FD-LS-0090
1135077	FD-LS-0950
1136072	FD-TC-0951
1136073	FD-TC-10175

...FORD	MOOG
1138160	FD-WP-0403
1138161	FD-WP-0404
1138275	FD-ES-0957
1138313	FD-ES-0841
1138314	FD-ES-0841
1139926	FD-WP-0716
1139928	FD-WP-0715
1141293	FD-WP-4143
1141293	FD-WP-4144
1141294	FD-WP-4143
1141294	FD-WP-4144
1141774	VO-LS-0318
1144424	FD-LS-2368
1145271	FD-SB-15694
1145272	FD-SB-3161
1146130	FD-WP-0738
1146130 (-)	FD-SB-2263
1146130 (-)	FD-SB-2264
1146131	FD-WP-0739
1146131 (-)	FD-SB-2263
1146131 (-)	FD-SB-2264
1146150	FD-LS-2259
1146160	FD-SB-8115
1149802	FD-WP-0716
1149803	FD-WP-0715
1149932	FD-WP-0738
1149932 (-)	FD-SB-2263
1149932 (-)	FD-SB-2264
1149933	FD-WP-0739
1149933 (-)	FD-SB-2263
1149933 (-)	FD-SB-2264
1150353	FD-TC-7260
11516078	AMGK7275
1152852	FD-SB-6811
1202213	FD-WP-0738
1202214	FD-WP-0739
1202548	FD-ES-2262
1202549	FD-ES-2261
1203093	FD-LS-0122
1203923	FD-WP-0716
1203923 (-)	FD-BJ-0474
1203924	FD-WP-0715
1203924 (-)	FD-BJ-0474
1206474	FD-LS-5445
1207447	FD-WP-0738
1207448	FD-WP-0739
1207973	FD-WP-0403
1207974	FD-WP-0404
1208511	FD-WP-0738
1209035	FD-LS-0090
1209035	FD-LS-0950
1209076	FD-WP-0738
1209077	FD-WP-0739
1211756	FD-WP-0738
1212807	FD-WP-0738
12128078 (-)	FD-BJ-2260

...FORD	MOOG
1212808	FD-WP-0739
1212809	FD-WP-0403
1212810	FD-WP-0404
1214290	FD-TC-15369
1214290 (-)	FD-SB-12520
1214911	FD-WP-0738
1214912	FD-WP-0739
1217036	FD-LS-2368
1219697	FD-LS-0808
1219697	FD-LS-3286
1220005	FD-TC-12698
1220005 (-)	FD-SB-12523
1223792	FD-LS-3667
1223897	FD-TC-0951
1223923	FD-LS-3662
1230909	FD-LS-3667
1231452	FD-LS-3662
1232756	VO-LS-0318
1233552	VO-DS-8257
1233553	VO-DS-8256
1234258	VO-ES-8258
1234259	VO-ES-8259
1234371	VV-WP-3645
1234375	VV-WP-3640
1234375	VV-WP-4871
1234382	VV-BJ-3653
1251937	FD-AX-3957
1253969	FD-LS-3662
1254310	VV-WP-3645
1254311	VV-WP-3640
1254311	VV-WP-4871
1304120	FD-LS-3662
1304124	FD-SB-0191
1305341	VV-WP-3645
1305342	VV-WP-3640
1305342	VV-WP-4871
1305960	FD-SB-6812
1307891	FD-SB-7201
1309148	VV-WP-3645
1309149	VV-WP-3640
1309149	VV-WP-4871
1309644	VV-WP-3645
1309645	VV-WP-3640
1309645	VV-WP-4871
1310333	FD-LS-3662
1310518	FD-SB-15694
1311416	FD-SB-0492
1311416	FD-SB-0497
1311416	FD-WP-0716
1311416S1	FD-SB-0497
1311416S2	FD-SB-0492
1311417	FD-WP-0715
1315074	FD-ES-3665
1315074	FD-ES-3891
1315083	FD-ES-3665
1315083	FD-ES-3891

...FORD	MOOG
1317446	FD-ES-3665
1317446	FD-ES-3891
1317447	FD-ES-3665
1317447	FD-ES-3891
1317453	FD-AX-4851
1317609	FD-TC-0951
1320619	FD-TC-12698
1325326	FD-SB-12523
1325326	FD-TC-13360
1328380	VV-WP-3645
1328381	VV-WP-3640
1328381	VV-WP-4871
1328670	VV-WP-3645
1328671	VV-WP-3640
1328671	VV-WP-4871
1328877	FD-ES-3665
1328877	FD-ES-3891
1328881	FD-ES-3665
1328881	FD-ES-3891
1329730	FD-TC-0951
1329730 (-)	FD-SB-10674
1330219	FD-WP-4141
1330235	FD-WP-4142
1330236	FD-WP-0843
1330237	FD-WP-0844
1330238	FD-WP-4150
1330239	FD-WP-4149
1330239	FD-WP-4150
1332074	VV-WP-3645
1332075	VV-WP-3640
1332075	VV-WP-4871
1332453	FD-LS-2049
1332454	FD-WP-2047
1332455	FD-WP-2048
1332463	FD-LS-2051
1335548	FD-LS-3662
1337964	FD-SB-12667
1337965	FD-SB-12667
1344966	FD-WP-0403
1344968	FD-WP-0404
1345913	FD-SB-12667
1345913	FD-SB-14048
1348191	VV-WP-3645
1348192	VV-WP-3640
1348192	VV-WP-4871
1348231	FD-SB-10174
1353188	VO-LS-0318
1355048	FD-WP-2047
1355050	FD-WP-2048
1355149	VV-WP-3645
1355151	VV-WP-3640
1355151	VV-WP-4871
1355548	FD-LS-3662
1361653	VO-LS-0318
1362650	VV-WP-3645
1362651	VV-WP-3640

...FORD	MOOG
1362651	VV-WP-4871
1370709	FD-AX-2527
1370710	FD-AX-2526
1370741	FD-ES-0957
1371748	FD-SB-12667
1377416	FD-LS-5699
1377447	FD-TC-12515
1377447 (-)	FD-SB-13777
1377447 (-)	FD-SB-13778
1377449	FD-TC-5741
1377655	FD-AX-4851
1377848	FD-WP-5112
1377849	FD-LS-5111
1377973	FD-SB-13487
1381442	FD-TC-12515
1381442 (-)	FD-SB-13777
1381442 (-)	FD-SB-13778
1381443	FD-TC-5741
1385594	FD-WP-5112
1387624	FD-SB-10177
1387627	FD-TC-12515
1387627 (-)	FD-SB-13777
1387627 (-)	FD-SB-13778
1387628	FD-TC-5741
1388549	FD-ES-3665
1388549	FD-ES-3891
1403410	FD-WP-5112
1404785	FD-ES-3665
1404785	FD-ES-3891
1404976	FD-SB-3480
1404977	FD-SB-3501
1405523	FD-SB-10177
1417351	FD-BJ-8945
1417352	FD-BJ-0814
1419815	FD-WP-5112
1420795	VV-WP-4872
1420858	VV-WP-4871
1421954	FD-TC-12515
1421954 (-)	FD-SB-13777
1421954 (-)	FD-SB-13778
1425853	FD-LS-5699
1426770	FD-TC-5741
1426770 (-)	FD-SB-12514
1426876	FD-WP-5112
1433271	FD-AX-5110
1433271	FD-RK-15038
1433273	FD-ES-5109
1433274	FD-ES-5108
1433294	FD-LS-5111
1435747	FD-WP-5112
1436095	FD-WP-0739
1436097	FD-WP-0738
1436097	FD-WP-0739
1436169	FD-WP-0738
1436170	FD-WP-0739
1437192	FD-SB-14762

...FORD	MOOG
1438315	FD-WP-2524
1438315	FD-WP-2525
1438316	FD-WP-2524
1438316	FD-WP-2525
1438318	FD-WP-2524
1438318	FD-WP-2525
1438350	FD-WP-2524
1438350	FD-WP-2525
1447222	FD-ES-0331
1448127	FD-TC-10175
1448621	FD-WP-0163
1448622	FD-WP-0162
1451914	FD-BJ-0814
1451917	FD-BJ-8945
1457609	FD-TC-5742
1457609 (-)	FD-SB-12513
1458773	FD-WP-5113
1460693	FD-WP-5112
1466186	FD-WP-5113
1466186 (-)	FD-BJ-7296
1466186 (-)	FD-SB-5114
1466186 (-)	FD-SB-5115
1466186 (-)	FD-SB-5116
1466188	FD-WP-5112
1466188 (-)	FD-BJ-7296
1466188 (-)	FD-SB-5114
1466188 (-)	FD-SB-5115
1466188 (-)	FD-SB-5116
1469024	FD-WP-5113
1469026	FD-WP-5112
1469125	FD-TC-12515
1469125 (-)	FD-SB-13777
1469125 (-)	FD-SB-13778
1469208	FD-LS-3662
1469212	FD-LS-2259
1470387	VV-BJ-4873
1471446	FD-LS-0090
1471446	FD-LS-0950
1477858	FD-SB-14991
1477858	VV-WP-3645
1477860	VV-WP-3640
1477860	VV-WP-4871
1478582	FD-SB-10176
1484033	FD-TC-0951
1487402	FD-LS-0122
1488110	VV-WP-4872
1488111	VV-WP-4871
1488960	FD-SB-13487
1490759	FD-ES-0957
1495666	FD-WP-2524
1495666	FD-WP-2525
1495667	FD-WP-2524
1495667	FD-WP-2525
1495685	FD-LS-7924
1495717	FD-SB-2528
1500682	FD-LS-10437

...FORD	MOOG
1501583	FD-ES-8338
1501853	FD-ES-8338
1501855	FD-ES-8337
1502084	FD-SB-8971
1502086	FD-WP-8950
1502086 (-)	FD-BJ-8340
1502087	FD-WP-8949
1502087 (-)	FD-BJ-8341
1502681	FD-LS-10512
1502729	FD-TC-14098
1507181	FD-WP-5113
1507182	FD-WP-5112
1510270	FD-AX-3957
1513343	FD-LS-14891
1513343	FD-LS-8093
1517403	FD-TC-0951
1518904	FD-WP-7998
1520778	FD-WP-7998
1521773	FD-WP-7997
1522081	FD-WP-0716
1522130	FD-WP-0715
1524422	FD-TC-0951
1528314	FD-SB-10173
1532421	FD-WP-7998
1532433	FD-WP-7997
1533836	FD-SB-12519
1535296	FD-SB-8467
1540244	FD-TC-8849
1540244 (-)	FD-SB-8852
1540246	FD-TC-8850
1540246 (-)	FD-SB-8852
1540281	FI-LS-2371
1540724	FD-WP-7998
1540724 (-)	FD-BJ-8090
1540725	FD-WP-7997
1540725 (-)	FD-BJ-8090
1540725 (-)	FD-SB-8091
1540725 (-)	FD-SB-8092
1541354	FI-AX-5694
1541355	FI-AX-5694
1541485	FD-ES-8338
1541488	FD-ES-8337
1541652	FD-ES-3891
1541811	FD-ES-3665
1541811	FD-ES-3891
1545338	FD-ES-7387
1545339	FD-ES-7386
1545457	FD-AX-7388
1546259	FI-ES-2516
1546260	FI-ES-2517
1553246	FD-WP-2524
1553246	FD-WP-2525
1553251	FD-WP-2524
1553251	FD-WP-2525
1566810	FD-SB-12519
1566829	FD-SB-12519

...FORD	MOOG
1566835	FD-SB-12519
1566837	FD-SB-12518
1566838	FD-SB-12518
1566839	FD-SB-12518
1566841	FD-SB-12518
1566841	FD-SB-12519
1570284	VV-WP-4872
1570285	VV-WP-4871
1570678	VV-WP-3640
1570750	VV-WP-3645
1571221	FD-ES-0331
1580514	FD-TC-8849
1580515	FD-TC-8850
1580517	FI-LS-2371
1591585	FD-SB-1130
1595905	FD-SB-1130
1596574	FD-AX-5110
1596574	FD-RK-15038
1610365	K150015
1613106	FD-AX-3140
1619061	K150019
1630154	FD-TC-3378
1630155	FD-TC-3377
1630507	FD-SB-3625
1632679	FD-SB-2378
1632766	FD-TC-3378
1632767	FD-TC-3377
1634900	FD-SB-3160
1637182	FD-TC-3381
1637183	FD-TC-3381
1637184	FD-TC-3380
16371845	FD-TC-3380
1637185	FD-TC-3380
1639574	FD-TC-8849
1639575	FD-TC-8850
1640853	FD-TC-3378
1640854	FD-TC-3377
1652910	FD-SB-1130
1652936	FD-SB-6693
1656748	FD-TC-3378
1656749	FD-TC-3377
1656752	FD-SB-1113
1659374	FD-AX-4137
1659591	FD-SB-6673
1661237	FD-LS-0090
1662210	K150175
1679376	FD-BJ-0474
1679384	VV-BJ-3653
1679388	VV-BJ-4873
1679398	FD-BJ-4134
1679401	FD-BJ-0425
1683463	FD-TC-13347
1686183	FD-SB-13750
1686587	FD-TC-13515
1686594	FD-LS-3667
1686705	FD-TC-13762

...FORD	MOOG
1691815	FD-LS-10901
1692849	FD-SB-13516
1694569	FD-TC-13762
1700809	FD-WP-7998
1700810	FD-WP-7997
1701466	FD-LS-10901
1702970	FD-WP-12508
1702983	FD-WP-12507
1703145	FD-TC-13515
1706970	FD-WP-0738
1706971	FD-WP-0739
1708222	FD-WP-7998
1708226	FD-WP-7997
1709423	FD-TC-13606
1709457	FD-WP-12508
1709457 (-)	FD-BJ-12510
1709457 (-)	FD-SB-12511
1709457 (-)	FD-SB-12512
1709466	FD-WP-12507
1709466 (-)	FD-BJ-12509
1709466 (-)	FD-SB-12511
1709466 (-)	FD-SB-12512
1709468	FD-TC-13605
1710796	FD-WP-4149
17114891	FD-LS-10901
1712237	FD-TC-13515
1712696	FD-WP-7998
1712697	FD-WP-7997
1714484	FD-AX-3957
1714484	FD-AX-8855
1714576	FD-ES-9000
1714700	FD-ES-8999
1714891	FD-LS-10901
171513333	VO-SB-10061
1715414	FD-AX-8855
1719006	FD-TC-13762
1719542	FD-LS-10437
1723323	FD-WP-8950
1723324	FD-WP-8949
1730933	FD-ES-3665
1730933	FD-ES-3891
1730934	FD-ES-3665
1730934	FD-ES-3891
1734686	FD-LS-3662
1735889	FD-WP-2524
1735889	FD-WP-2525
1735890	FD-WP-2524
1735890	FD-WP-2525
1736669	FD-ES-0957
1737305	FD-WP-7997
1737309	FD-WP-7998
1742266	FD-WP-12507
1743642	FD-ES-0957
1744421	FD-TC-13762
1745924	FD-LS-14891
1745924	FD-LS-8093

...FORD	MOOG
1748237	FD-ES-9000
1748239	FD-ES-8999
1748361	FD-SB-13259
1749593	FD-TC-13606
1749992	FD-TC-13605
1751952	FD-WP-13616
1751955	FD-WP-13615
1754076	FD-AX-12605
1761200	FD-LS-2259
1762149	FD-LS-3667
1763714	FD-LS-7924
1763991	FD-AX-13617
1767896	FD-LS-10901
1776806	FD-SB-15341
1780102	FD-ES-9000
1780103	FD-ES-8999
1780104	FD-AX-8855
1783320	FD-LS-10512
1785667	FD-TC-13762
1790310	FD-LS-14891
1790310	FD-LS-8093
1801446 (-)	FD-SB-15216
1801446 (-)	FD-SB-15324
1802974	FD-ES-14912
1802977	FD-ES-14911
1805815	FD-SB-8467
1810736	FD-SB-14807
1814315	FD-LS-10901
1826501	FD-ES-9000
1826505	FD-ES-8999
1836649	FD-AX-12605
1851900	FD-LS-3667
1865033	FD-SB-12518
1865034	FD-SB-12519
1894049	FD-TC-13762
1899978	FD-AX-12605
1905043	FD-LS-8093
191512333	VO-SB-10061
191512335	VO-SB-10061
191512339	VO-SB-10061
191512340	VO-SB-10061
1954430	NI-BJ-10389
1954431	NI-BJ-10423
1954757	NI-SB-3212
1954778	MI-LS-2776
1954821	FD-LS-4064
1955337	NI-BJ-10930
1959337	NI-BJ-10930
1961668	NI-ES-3002
1961668	NI-ES-3051
1961669	NI-ES-3051
1E0132125	K150144
1E0232125	K150144
1J0412249	VO-SB-10067
1M215489AA	VO-LS-0318
1M215489AB	VO-LS-0318

...FORD	MOOG
1M515500AA	FD-TC-0951
1M515500AB	FD-TC-0951
1M515500AC	FD-TC-0951
1M515500BA	FD-TC-10175
1S613B438AA	FD-LS-0090
1S713042AH	FD-WP-0716
1S713042AK	FD-WP-0716
1S713042AL	FD-WP-0716
1S713042AM	FD-WP-0716
1S713042AN	FD-WP-0716
1S713051AE	FD-WP-0715
1S713051AK	FD-WP-0715
1S713051AL	FD-WP-0715
1S713051AM	FD-WP-0715
1S713051AN	FD-WP-0715
1S713395AE	FD-BJ-0474
1S7138438AB	FD-LS-0808
1S7138438BA	FD-LS-0808
1S7138438BA	FD-LS-3286
1S713B438AB	FD-LS-0808
1S713B438AC	FD-LS-0808
1S713B438BA	FD-LS-0808
1S713B438BA	FD-LS-3286
1S714A037DC	FD-SB-7973
1S715484AC	FD-SB-7201
1S715484AD	FD-SB-7201
1S715500AA	FD-TC-13360
1S715500AC	FD-TC-13360
1S71-5500-AC	FD-SB-12523
1S715C486AC	FD-LS-0469
1S715C486AD	FD-LS-0469
1S715C486BC	FD-LS-3274
1S715C486BD	FD-LS-3274
1S715C486BE	FD-LS-3274
1S715K652AC	FD-LS-5444
1S715K652BC	FD-TC-15369
1S715K652CA	FD-TC-15369
1S715K743AB	FD-LS-5446
1S715K743AC	FD-LS-5446
1S715K743CA	FD-TC-12698
1S71-5K743-CA	FD-SB-12523
1S715K898AF	FD-LS-5445
1S715K898AG	FD-LS-5445
1S7C3280BB	FD-AX-0470
1S7C3290AB	FD-ES-0841
1S7C3290BB	FD-ES-0841
1S7C3K661AB	K150218
1S7J3290AB	FD-ES-0841
1S7J3290BB	FD-ES-0841
1S7Z18198A	FD-SB-9656
1X43-5K653-AA	FD-SB-12523
2104602300	K150088
2104630798	K150088
274500	FD-ES-3665
274501	FD-ES-3891
2L2Z5K483BA	AMGK7275

...FORD	MOOG	...FORD	MOOG	...FORD	MOOG	...FORD	MOOG
2M513042BA	FD-WP-0403	30681546	VV-SB-9882	3C115484CA	FD-SB-13259	4097484	FD-AX-0470
2M513042BC	FD-WP-0403	30714126	VV-WP-3640	3M213280AA	VO-ES-8258	4111327	FD-AX-0470
2M513042BD	FD-WP-0403	30714127	VV-WP-3645	3M213281AA	VO-ES-8259	4115050	FD-AX-0007
2M513042BE	FD-WP-0403	30714128	VV-SB-3647	3M215489AA	VO-LS-0318	4118933	FD-ES-0841
2M513051BA	FD-WP-0404	30730829	VV-WP-4871	3M215489AB	VO-LS-0318	4118934	FD-ES-0841
2M513051BC	FD-WP-0404	30736864	FD-TC-5741	3M513289AC	FD-ES-3665	4119193	K150218
2M513051BD	FD-WP-0404	30760069	FD-TC-5741	3M513289AC	FD-ES-3891	4120734	FD-BJ-0814
2M515E494AB	FD-LS-0122	30760236	FD-LS-10437	3M513290AC	FD-ES-3665	4131788	FD-SB-2529
2N113042AE	FD-WP-0738	30760237	FD-LS-10437	3M513A423AG	VV-WP-3645	4140393	FD-WP-2524
2N113042AH	FD-WP-0738	30760238	FD-LS-10437	3M513A423AH	VV-WP-3645	4140393	FD-WP-2525
2N113051AE	FD-WP-0739	30760921	FD-SB-14762	3M513A423AJ	VV-WP-3645	4140394	FD-WP-2524
2S613042AD	FD-WP-0738	31201180	VV-WP-4872	3M513A424AG	VV-WP-3640	4140394	FD-WP-2525
2S613042AF	FD-WP-0738	31201181	VV-WP-4871	3M513A424AH	VV-WP-3640	4164518	FD-WP-2524
2S613042AH	FD-WP-0738	31262037	VV-WP-4872	3M513A424AJ	VV-WP-3640	4164518	FD-WP-2525
2S613042AJ	FD-WP-0738	31262039	VV-WP-4871	3M513B438AA	FD-LS-3667	4164521	FD-WP-2524
2S613042DA	FD-WP-0738	31262127	FD-TC-5741	3M513B438AB	FD-LS-3667	4164521	FD-WP-2525
2S613051AH	FD-WP-0739	31262930	FD-TC-5741	3M513C367AB	FD-ES-3665	4173761	FD-BJ-0814
2S613051AJ	FD-WP-0739	31277462	VV-WP-4872	3M513C367AB	FD-ES-3891	4330628	K150219
2S613051DA	FD-WP-0739	31277463	VV-WP-4871	3M513C437AA	FD-ES-3891	4342539	FD-AX-2258
2S613B438AC	FD-LS-2259	3250825	FD-AX-2483	3M513C437AB	FD-ES-3665	4342539	FD-RK-15057
2S613B438AD	FD-LS-2259	3252249	FD-BJ-10065	3M513K209AA	VV-BJ-3653	4346344	FD-LS-5613
2S615484DA	FD-SB-6811	3252250	FD-BJ-10066	3M513K209BA	VV-BJ-4873	4346344	FD-LS-6620
2S6C3280KA	FD-AX-2258	3345796	K150153	3M513L519AA	FD-AX-3957	4366973	FD-WP-2047
2S6C3280KA	FD-RK-15057	3405915	MD-ES-0621	3M513L519AB	FD-AX-3957	4366973 (-)	FD-SB-5644
2S6C3280KB	FD-AX-2258	3410591	MD-LS-1127	3M515484CA	FD-SB-6812	4366974	FD-WP-2048
2S6C3280KB	FD-RK-15057	3410592	KI-LS-2674	3M515500BA	FD-TC-0951	4366974 (-)	FD-SB-5644
2S6C3K661JB	K150219	3410592	MD-LS-1117	3M515C486BC	FD-LS-3662	4366976	FD-SB-2530
2S6J3289AC	FD-ES-2262	3516496	VV-SB-7235	3M515C486BD	FD-LS-3662	4367012	FD-LS-2049
2S6J3290AC	FD-ES-2261	3530202	VV-SB-7234	3M515C486BE	FD-LS-3662	4367058	FD-SB-12524
2S715484AA	FD-SB-7201	357412249	VO-SB-10067	3N615484AA	FD-SB-10174	4367076	FD-LS-2051
2T143042BF	FD-WP-2047	357412319B	VO-SB-10067	4 134 805	AMGK7275	4372130	FD-WP-2524
2T143042BH	FD-WP-2047	357412331A	VO-SB-10067	4 180 663	AMGK7275	4372130	FD-WP-2525
2T143042BJ	FD-WP-2047	36020095A	K150087	4041450	FD-SB-2529	4372131	FD-WP-2524
2T143051BF	FD-WP-2048	36020095A	K150088	4041489	FD-SB-10178	4372131	FD-WP-2525
2T143051BH	FD-WP-2048	36020096A	K150088	4041490	FD-SB-10726	4372132	FD-SB-2528
2T143289AA	FD-ES-2050	36020096A	K150109	4041521	FD-SB-10690	4379900	FD-SB-6813
2T143B438BA	FD-LS-2049	36020096A	K150120	4042022	FD-WP-2524	4381840	FD-ES-2050
2T143B438BB	FD-LS-2049	36020096A	K150174	4042022	FD-WP-2525	4381841	K150264
2T143K661AA	K150264	3665732	MD-BJ-10688	4042023	FD-WP-2524	4381927	FD-BJ-0814
2T144A037AB	FD-SB-6813	3702281	FD-AX-2197	4042023	FD-WP-2525	4382950	FD-SB-12524
2T144A037AC	FD-SB-6813	3703128	FD-WP-0558	4042024	FD-SB-2528	4385316	FD-SB-6787
2T144A037DC	FD-SB-12524	3703149	FD-WP-0557	4042068	FD-LS-6620	4386426	FD-SB-9623
2T145484BC	FD-SB-6787	3707333	FD-AX-1537	4045250	K150260	4386870	FD-BJ-0814
2T145484BD	FD-SB-6787	3707333	FD-RK-15055	4047091	FD-ES-0957	4414780	FD-LS-2051
2T145C486AE	FD-LS-2051	3707333	FD-RK-15069	4048739	FD-AX-0270	4419557	FD-SB-6813
2T145C486AG	FD-LS-2051	3707533	FD-AX-1537	4048739	FD-AX-4137	4419558	FD-SB-12524
3 252 473	AMGK7275	3707533	FD-RK-15055	4059921	K150087	4419559	FD-SB-6787
3 252 478	AMGK7275	3707533	FD-RK-15069	4059921	K150088	4420546	FD-LS-2051
3 665 949	AMGK7275	3736028	FD-LS-5736	4059921	K150174	4436609	FD-LS-2051
3 665 965	AMGK7275	3799085	MD-LS-2017	4059922	K150088	4440885	FD-LS-5613
3 754 149	AMGK7275	3903147	FD-AX-4145	4059922	K150109	4472940	FD-AX-2258
3 951 303	AMGK7275	3903147	FD-AX-4146	4059922	K150120	4472940	FD-RK-15057
3043575	K150144	3903148	FD-AX-2197	4059922	K150174	4519467	FD-LS-7924
30666821	FD-SB-0191	3903149	FD-AX-2197	4059923	FD-AX-2527	4531299	FD-LS-5613
30678440	FD-SB-14991	3904122	K150070	4059924	FD-AX-2526	4531299	FD-LS-6620
30678440	VV-SB-3648	3C113B438AC	FD-LS-7924	406641	K150088	4539871	FD-WP-2047

...FORD	MOOG
4540774	FD-WP-2524
4540774	FD-WP-2525
4540775	FD-WP-2524
4540775	FD-WP-2525
4540787	FD-SB-2528
4568245	K150088
4568245	K150109
4568245	K150120
4568245	K150174
4577976	FD-AX-2526
4583286	FD-SB-14079
4602028	FD-AX-2527
4616978	FD-BJ-0814
4630551	FD-BJ-0814
4671720	FD-SB-13259
4775683	K150218
4851031G25	NI-DS-2386
485107F000	NI-DS-2386
485207F000	NI-ES-3002
4857061G25	NI-ES-1757
4863031G25	NI-DS-2386
4964975	FD-SB-14079
4M513289AB	FD-ES-3665
4M513289AC	FD-ES-3665
4M513289AD	FD-ES-3891
4M513290AB	FD-ES-3665
4M513290AB	FD-ES-3891
4M513290AC	FD-ES-3665
4M513290AC	FD-ES-3891
4M513A423AA	VV-WP-3645
4M513A423AB	VV-WP-3645
4M513A423AC	VV-WP-3645
4M513A423AD	VV-WP-4872
4M513A423BA	VV-WP-3645
4M513A423BB	VV-WP-3645
4M513A424AA	VV-WP-3640
4M513A424AB	VV-WP-3640
4M513A424AC	VV-WP-3640
4M513A424BA	VV-WP-3640
4M513L519AA	FD-AX-4851
4M513L519AB	FD-AX-4851
4S613042AA	FD-WP-4141
4S613042BA	FD-WP-0843
4S613042CA	FD-WP-4150
4S613051AA	FD-WP-4142
4S613051BA	FD-WP-0844
4S613051CA	FD-WP-4149
4T163042AA	FD-WP-2047
4T163051AA	FD-WP-2048
4T165484AA	FD-SB-14079
5021410	FD-ES-0331
5021413	FD-ES-3369
5021414	FD-ES-3368
5021415	FD-ES-3379
5021426	FD-BJ-3372
5021458	FD-TC-3381

...FORD	MOOG
5021459	FD-TC-3380
5021461	FD-TC-3370
5021462	FD-TC-3378
5021463	FD-TC-3377
5021464	FD-TC-3376
5021465	FD-TC-3375
502162	FD-TC-3378
502163	FD-TC-3377
5021661	FD-SB-1130
5021729	FD-SB-1113
5024332	FD-ES-4105
5024333	FD-ES-4106
5025676	FD-BJ-4130
5027451	FD-ES-4113
5027452	FD-ES-4112
5030221	FD-ES-0604
5030221	FD-ES-0605
5030222	FD-ES-0604
5030222	FD-ES-0605
50708823 (-)	FI-SB-5697
50708823 (-)	FI-SB-5698
50708824 (-)	FI-SB-5697
50708824 (-)	FI-SB-5698
5106995	FD-LS-0950
5106995	FD-LS-4114
51786814	FI-AX-5694
51786815	FI-AX-5694
5182780	FD-LS-15239
5182818	FD-LS-14945
51875886	FI-AX-5694
51875887	FI-AX-5694
5288317	FD-TC-15363
5288317 (-)	FD-SB-15215
5288317 (-)	FD-SB-15362
54506B9500	NI-SB-3212
547607365	FD-BJ-4122
549407365	FD-BJ-4122
562600F001	FD-LS-4064
5S7C3K661AA	K150218
6069772	FD-SB-1130
6081391	FD-ES-0331
6087914	FD-SB-1130
6103590	K150080
6107025	FD-SB-1130
6114117	FD-TC-3370
6114615	FD-TC-3370
6114617	FD-TC-3370
6120231	FD-ES-3369
6120232	FD-ES-3368
6127716	FD-ES-3379
6127726	FD-AX-4138
6127932	FD-SB-9610
6128255	FD-AX-4119
6128736	K150015
6128814	FD-ES-0331
6130558	FD-BJ-3372

...FORD	MOOG
6130559	FD-BJ-3372
6130560	FD-BJ-3372
6131083	FD-AX-3140
6133284	FD-TC-3370
6133850	FD-TC-0958
6135185	FD-SB-1130
6141919	FD-SB-4464
6143189	FD-SB-4862
6144628	FD-SB-1113
6149369	FD-TC-3370
6149940	FD-TC-3370
6150276	FD-SB-9601
6150277	FD-SB-9601
6150970	FD-LS-0962
6150971	FD-LS-0963
6152415	FD-SB-4862
6154287	FD-TC-3376
6154288	FD-TC-3375
6154289	FD-TC-3376
6154290	FD-TC-3375
6156463	FD-AX-3388
6160988	FD-ES-3379
617346	K150015
617347	K150015
6180350	FD-AX-0007
6180393	FD-AX-0007
6180922	FD-AX-0026
6182818	K150193
6185334	FD-AX-4138
6185335	FD-AX-4129
6185336	FD-AX-3140
6185338	FD-AX-4154
6185809	FD-SB-3161
6186082	FD-LS-0090
6186194	FD-AX-4119
6188004	FD-LS-0090
6192705	FD-SB-2378
6193085	FD-BJ-4122
6193085	FD-WP-4132
6193086	FD-BJ-4134
6194368	FD-TC-3376
6194369	FD-TC-3370
6194370	FD-TC-3375
6197238	FD-AX-0026
6197402	FD-AX-3388
6198621	FD-LS-0090
630155	FD-TC-3377
63BB3051BC	FD-WP-4143
6517356	FD-SB-4509
6517364	FD-ES-4107
6521811	FD-SB-6666
6521812	FD-SB-6667
6525743	FD-WP-4126
6525843	FD-WP-4126
6525844	FD-WP-4127
6555473	FD-WP-0587

...FORD	MOOG
6555474	FD-WP-0588
6555936	FD-ES-4105
6555938	FD-ES-4106
6608818	FD-SB-4507
6608830	FD-WP-3313
6608832	FD-WP-3314
6615742	FD-WP-4126
6615743	FD-WP-4127
6639188	FD-AX-0270
6639188	FD-AX-4137
6645154	FD-WP-4132
6645155	FD-WP-0587
6645156	FD-WP-4131
6645157	FD-WP-0588
6650261	FD-BJ-4130
6687191	FD-ES-4107
6705519	FD-WP-0564
6705520	FD-WP-0565
6710265	FD-TC-7992
6710541	FD-LS-4114
6714195	FD-SB-6621
6720387	FD-SB-9601
6732630	FD-WP-4126
6732631	FD-WP-4127
6737692	FD-AX-4145
6758090	K150172
6770224	FD-WP-4126
6770225	FD-WP-4127
6772173	K150070
6790115	FD-SB-1348
6790700	FD-AX-0270
6790700	FD-AX-4137
6829045	FD-SB-7951
6829046	FD-SB-7952
6829050	FD-SB-7953
6829061	FD-TC-7992
6832049	FD-AX-4146
6867577	FD-TC-0954
6869951	FD-AX-3388
6870549	FD-SB-1346
6901534	FD-SB-7953
6915411	FD-SB-8964
6924365	FD-BJ-4130
6935233	K150085
6949548	FD-TC-7992
6954470	FD-WP-4144
6954471	FD-WP-4143
6954471 (-)	FD-BJ-4115
6960036	FD-LS-0950
6960036	FD-LS-4114
6969517	FD-ES-4125
6969518	FD-ES-4125
69AB3289AA	FD-ES-0331
6C113289AA	FD-ES-0957
6C113289AB	FD-ES-0957
6C113289AC	FD-ES-0957

...FORD	MOOG
6C113A052EA	FD-WP-2524
6C113A053EA	FD-WP-2525
6C113L519AA	FD-AX-2527
6C113L519BA	FD-AX-2526
6C163A262AA	FD-SB-2528
6C1J3289AA	FD-ES-0957
6G913280AA	FD-AX-5110
6G913280AA	FD-RK-15038
6G913280AB	FD-AX-5110
6G913280AB	FD-RK-15038
6G913289AA	FD-ES-5109
6G913290AA	FD-ES-5108
6G915C486XAA	FD-LS-5699
6G915C486XAB	FD-LS-5699
6G915K652XAE	FD-TC-12515
6G915K652XAE (-)	FD-SB-13777
6G915K652XAE (-)	FD-SB-13778
6G915K743XAD	FD-TC-5741
6G9N3A052DG	FD-WP-5113
6G9N3A052DH	FD-WP-5113
6G9N3A053DH	FD-WP-5112
6G9N3B438BA	FD-LS-5111
6M515500BA	FD-TC-10175
6S4Z3A197A	FD-SB-10069
7014210	FD-LS-2269
7078614	FD-ES-0604
7078615	FD-ES-0605
7102392	FD-SB-3161
7102644	FD-WP-4126
7102645	FD-WP-4127
7138554	K150144
7144202	FD-SB-10721
7144204	FD-SB-6768
7152269	FD-WP-4135
7152269 (-)	FD-WP-4135
7152270	FD-WP-4139
7152271	FD-WP-4136
7152272	FD-WP-4140
7152276	FD-WP-0587
7152277	FD-WP-0564
7152278	FD-WP-4132
7152278 (-)	FD-WP-4135
7152279	FD-WP-0588
7152280	FD-WP-0565
7152281	FD-WP-4131
7200944	VO-DS-8256
7200946	VO-BJ-0319
7200957	FD-SB-6767
7200959	VO-LS-0318
7201688	VO-SB-10067
7201717	VO-SB-1212
7201723	VO-SB-8810
7201848	VO-SB-10067
7230373	FD-LS-2016
7234730	FD-SB-9622
7243564	FD-ES-4106

...FORD	MOOG
7243565	FD-ES-4105
7260111	FD-LS-2368
7292944	FD-ES-0604
7292945	FD-ES-0605
7292960	FD-AX-2382
7294415	FD-AX-4145
7294415	FD-AX-4146
7294416	FD-AX-4146
7320351	RE-SB-10172
7350847	FD-SB-9620
7351747	FD-WP-4126
7351748	FD-WP-4127
7365613	FD-LS-2016
7371059	FD-SB-4467
7396830	VO-SB-1195
7398676	VO-DS-8256
7398680	K150084
7G9N3A052BA	FD-WP-5113
7G9N3A052BB	FD-WP-5113
7G9N3A053BA	FD-WP-5112
7G9N3A053BB	FD-WP-5112
7M0407151B	VO-WP-0451
7M0407152B	VO-WP-0450
7M0407181A	VO-SB-1195
7M3498317	VO-RK-1210
7T1Z3A197A	FD-SB-9656
81AB3289AA	FD-ES-0331
81AB5K897AB	FD-SB-1130
81AB5K897BA	FD-SB-1130
81AB5K897BB	FD-SB-1130
823512332	VO-SB-10061
823512333	VO-SB-10061
83BB3079BA	FD-TC-3370
83BB3289AB	FD-ES-3369
83BB3290AB	FD-ES-3368
83BB3A053BB	FD-TC-3370
83BB3A053BC	FD-TC-3370
83BB3A053BD	FD-TC-3370
83BB3K661BD	K150019
83BB3L519EA	FD-AX-3140
84AB3289AA	FD-ES-0331
84FB3079AB	FD-TC-0958
84FB3395A1A	FD-BJ-3372
84FB3395A3A	FD-BJ-3372
84FB3L519DA	FD-AX-4119
85BB3078AB	FD-TC-3376
85BB3078AC	FD-TC-3376
85BB3079AB	FD-TC-3375
85BB3079AC	FD-TC-3375
85BB3K132AA	FD-SB-9601
85BG3A052AD	FD-TC-3376
85BG3A052AE	FD-TC-3376
85GB3063AC	FD-SB-2378
85GB3289AA	FD-ES-3379
85GB3289AB	FD-ES-3379
85GB3A053AD	FD-TC-3375

...FORD	MOOG
85GB3A053AE	FD-TC-3375
85GB5484CA	FD-SB-4862
85GB5484EA	FD-SB-4862
85GB5493AB	FD-SB-1113
8623576	FD-LS-3667
86AB3078A2A	FD-TC-3381
86VB3B438AA	FD-LS-0962
86VB3B439AA	FD-LS-0963
86VB3BA438AA	FD-LS-0962
86VB3L519AD	FD-AX-3388
87AB3L519BA	FD-AX-4138
87BB3K661AA	K150193
87BB3L519EA	FD-AX-3140
87GB3L519BA	FD-AX-4154
880X3270AA	FD-ES-0331
880X3270DA	FD-ES-3369
880X3270EA	FD-ES-3368
880X3B376EA	FD-TC-3378
880X3B376FA	FD-TC-3376
880X3B377DA	FD-TC-3370
880X3B377EA	FD-TC-3377
880X3B77FA	FD-TC-3375
88GB5493AA	FD-SB-1113
880X3270FA	FD-ES-3379
89FB3042AF	FD-BJ-4122
89FB3042AF	FD-WP-4132
89FB3063AD	FD-SB-1345
89FB3395AB	FD-BJ-4122
89FB3B438A1E	FD-LS-0090
89FB3B438A1F	FD-LS-0090
89FB3L555AB	FD-AX-4137
89FB3L555BA	FD-AX-4137
89FB3L555BB	FD-AX-4137
8AG432280	MD-ES-0621
8M515500AB	FD-TC-0951
8S4Z18198A	FD-SB-10069
8V413A423AB	FD-WP-8950
8V413A424AB	FD-WP-8949
8V413C367AA	FD-ES-8338
8V413C437AA	FD-ES-8337
8V415C486AA	FD-LS-10512
8V415K652AA	FD-TC-14098
8V513042BA	FD-WP-7998
8V513042BD	FD-WP-7998
8V513042BG	FD-WP-7998
8V513051BB	FD-WP-7997
8V513051BD	FD-WP-7997
8V513051BG	FD-WP-7997
8V513051BH	FD-WP-7997
8V513B438AB	FD-LS-8093
8V513B438BB	FD-LS-8093
8V513C367AA	FD-ES-7387
8V513C437AA	FD-ES-7386
8V513L519AA	FD-AX-7388
8V515484AB	FD-SB-10173
8V515K653AA	FD-SB-8467

...FORD	MOOG
8V515K653BA	FD-SB-8467
91AB3051AD	FD-WP-4127
91AB3290A2C	FD-ES-4106
91AB3A262AA	FD-SB-1344
91AB3L519AA	FD-AX-0007
91AB3L519BA	FD-AX-0007
91AB3L519CB	FD-AX-0026
91AX3270AA	FD-ES-4105
91AX3270BA	FD-ES-4106
924B5484AA	FD-SB-6666
92AB3042BA	FD-WP-4126
92AB3051BA	FD-WP-4127
92AB3K661AA	K150085
92FB3L519AA	FD-AX-0270
92VB3069AA	FD-SB-4509
92VB3289AA	FD-ES-4107
92VB3395A2D	FD-BJ-4130
92VB3432AA	FD-SB-4507
92VB3A052AC	FD-WP-3313
92VB3A053AC	FD-WP-3314
92VB3K155AD	FD-SB-9612
92VB3L519AA	FD-AX-3388
92VB3L519AB	FD-AX-3388
92VB5484BA	FD-SB-6667
92VX3270AA	FD-ES-4107
92VX3K209AA	FD-BJ-4130
93BB3042BC	FD-WP-4144
93BB3051BC	FD-WP-4143
93BB3063AA	FD-SB-1348
93BB3395AC	FD-BJ-4115
93BB3A262BA	FD-SB-1346
93BB3B438CA	FD-LS-4114
93BB4A037AC	FD-SB-10721
93BB4A037EA	FD-SB-6768
93BB5C493AC	FD-SB-8964
93BB5K566AG	FD-LS-2016
93BB5K566AH	FD-LS-2016
93BB5K652AC	FD-TC-0954
93BB5K652CG	FD-TC-7992
93BB5K66AH	FD-LS-2016
93BB-5K896-AB	FD-SB-7953
93BB-5K896-AC	FD-SB-7953
93BX3270AA	FD-ES-4113
93BX3270BA	FD-ES-4112
93BX3289AA	FD-ES-4156
9404066418	K150088
94AB5484AA	FD-SB-3161
94AB5484AB	FD-SB-3161
94FB3042AB	FD-WP-4135
94FB3042AB (-)	FD-WP-4135
94FB3042AD	FD-WP-4135
94FB3042BA	FD-WP-4139
94FB3042BC	FD-WP-4139
94FB3042EA	FD-BJ-4122
94FB3042EA	FD-WP-4132
94FB3042EB	FD-WP-4132

...FORD	MOOG
94FB3051AB	FD-WP-4136
94FB3051AD	FD-WP-4136
94FB3051BA	FD-WP-4140
94FB3051BC	FD-WP-4140
94FB3051DA	FD-WP-4131
94FB3051EA	FD-WP-4131
94FB3051EB	FD-WP-4131
94FB3289A2A	FD-ES-4125
94FB3395A1B	FD-BJ-4134
94FB3395A2B	FD-BJ-4134
94FB3395BA	FD-BJ-4134
94FB3K661A2C	K150144
94FB3K661AC	K150144
94FX3042BC	FD-WP-4139
94FX3051BC	FD-WP-4140
95AB3042AB	FD-WP-4126
95AB3042AE	FD-WP-4126
95AB3051AB	FD-WP-4127
95AB3051AE	FD-WP-4127
95AB3289AA	FD-ES-4105
95AB3290AA	FD-ES-4106
95AB5K653CA	FD-SB-4467
95AX3270AA	FD-ES-4105
95AX3270BA	FD-ES-4105
95AX3270BA	FD-ES-4106
95BG3A262AA	FD-SB-1347
95BG3A262BA	FD-SB-1347
95GB3289AB	FD-ES-0604
95GB3290AB	FD-ES-0605
95GB3B438AC	FD-LS-2368
95GB3B438AD	FD-LS-2368
95GB3B438AE	FD-LS-2368
95GB3B438AF	FD-LS-2368
95GB3L519BA	FD-AX-2382
95GB3L519BB	FD-AX-2382
95GG3K661AA	K150172
95GX3270AA	FD-ES-0604
95GX3270AA	FD-ES-0605
95GX3270BA	FD-ES-0604
95GX3270BA	FD-ES-0605
95VW3078AC	VO-WP-0450
95VW3079AC	VO-WP-0451
95VW3280AG	VO-DS-8256
95VW3280BB	VO-ES-8258
95VW3280BC	VO-ES-8258
95VW3281AG	VO-AX-0358
95VW3281AG	VO-RK-15009
95VW3281AH	VO-AX-0358
95VW3281AH	VO-RK-15009
95VW3281BB	VO-ES-8259
95VW3281BC	VO-ES-8259
95VW3395AA	VO-BJ-0319
95VW3A262BA	VO-SB-1195
95VW3K661AC	K150084
95VW5484AB	FD-SB-6767
95VW5489AB	VO-LS-0318

...FORD	MOOG
95VW5489AC	VO-LS-0318
96FB3051CC	FD-WP-4142
96FB3063AB	FD-SB-1350
96FB3289AD	FD-ES-4148
96FB3290AC	FD-ES-4147
96FB3290AD	FD-ES-4147
96FB3395AB	FD-BJ-0425
96FB3A262AA	FD-SB-1351
96FB3A262AD	FD-SB-1351
96FB3B376AA	FD-BJ-4122
96FB3B438AB	FD-LS-0090
96FB3L519BA	FD-AX-4153
96FB5484CA	FD-SB-6664
96FB5K653CA	FD-SB-4060
96FX3289AA	FD-ES-4148
96FX3290AA	FD-ES-4147
97BG3042AA	FD-WP-4144
97BG3042CA	FD-WP-4144
97BG3051AA	FD-WP-4143
97BG3051CA	FD-WP-4143
97BG5495AC	FD-LS-5751
97BG5776AC	FD-LS-5751
97BG5C491AC	FD-LS-5751
97BX3289AA	FD-ES-4156
97BX3290AA	FD-ES-4155
97FB3289A1A	FD-ES-4125
97KB3042AD	FD-WP-0163
97KB3042BC	FD-WP-0721
97KB3042EB	FD-WP-0163
97KB3042EC	FD-WP-0163
97KB3042FB	FD-WP-0721
97KB3051AC	FD-WP-0162
97KB3051AD	FD-WP-0162
97KB3051BC	FD-WP-0722
97KB3051BD	FD-WP-0722
97KB3051DB	FD-WP-0722
97KB3051DC	FD-WP-0722
97KB3051EB	FD-WP-0162
97KB3051EC	FD-WP-0162
97KB3051FB	FD-WP-0722
97KB3051FB	FD-WP-4140
97KB3289BA	FD-ES-4125
97KB5484AA	FD-SB-6665
97KX3270AA	FD-ES-4125
97VB3289AA	FD-ES-4107
97VX3270AA	FD-ES-4107
97VX3K209AA	FD-BJ-4130
98AG3042AJ	FD-WP-0403
98AG3042AK	FD-WP-0403
98AG3051AJ	FD-WP-0404
98AG3051AK	FD-WP-0404
98AG3063AE	FD-SB-1353
98AG3289AA	FD-ES-1535
98AG3290AA	FD-ES-1536
98AG3B438AB	FD-LS-0090
98AG3K661AA	K150193

...FORD	MOOG
98AG3L519AA	FD-AX-1537
98AG3L519AA	FD-RK-15055
98AG3L519AA	FD-RK-15069
98AG4A037BA	FD-SB-3659
98AG5484DA	FD-SB-0190
98AG5495AB	FD-LS-0122
98AG5500AG	FD-TC-0951
98AG5500AG (-)	FD-SB-10674
98AG5500BF	FD-TC-10175
98AG5K652AK	FD-TC-7260
98AG5K743AF	FD-TC-0952
98AG5K896AB	FD-SB-0191
98AX3270AA	FD-ES-1535
98AX3270BA	FD-ES-1536
98FB3042AC	FD-WP-4141
98FB3042AD	FD-WP-4141
98FB3042BC	FD-WP-0843
98FB3042BD	FD-WP-0843
98FB3042CD	FD-WP-4150
98FB3051AC	FD-WP-4142
98FB3051AD	FD-WP-4142
98FB3051BD	FD-WP-0844
98FB3051CC	FD-WP-4149
98FB3051CD	FD-WP-4149
98FB3063AA	FD-SB-1350
98FB3A262AA	FD-SB-1351
9945837	K150088
9945837	K150109
9945837	K150174
9S513078AA	FD-TC-8849
9S513078AC	FD-TC-8849
9S513078BA	FD-TC-8850
9S513078BC	FD-TC-8850
9S513270AA	FI-ES-2516
9S513270BA	FI-ES-2517
9S515K484AA	FI-LS-2371
9S515K484AB	FI-LS-2371
AV613A423LB	FD-WP-12508
AV613A423MA	FD-TC-13606
AV613A423PA	FD-TC-13606
AV613A424LB	FD-WP-12507
AV613A424MA	FD-TC-13605
AV613A424PA	FD-TC-13605
AV613B438AA	FD-LS-3667
AV615484AA	FD-SB-13750
AV615484BA	FD-SB-13761
AV615500AB	FD-TC-13347
AV61-5K743-BA	FD-TC-13515
AV6C3C367AA	FD-ES-9000
AV6C3C437AA	FD-ES-8999
AV6C3L519AA	FD-AX-8855
AV6C3L519BA	FD-AX-8855
AY113042AA	FD-WP-13616
AY113051AA	FD-WP-13615
AY115484AC	FD-SB-15341
B37F28910B	FD-SB-10076

...FORD	MOOG
B37F28910C	FD-SB-10076
B37F28910D	FD-SB-10076
BK213L519AA	FD-AX-13617
BR5S28910C	FD-SB-10076
BR5V28910C	FD-SB-10076
BV613A423AAB	FD-WP-12508
BV613L519AA	FD-AX-12605
BV615C486BAA	FD-LS-10901
BV615K652AD	FD-TC-13762
BV61-5K743-AA	FD-TC-13515
BV6C3C367AA	FD-ES-9000
BV6C3C367BA	FD-ES-9000
BV6C3C367BB	FD-ES-9000
BV6C3C437AA	FD-ES-8999
BV6C3C437BA	FD-ES-8999
BV6C3C437BB	FD-ES-8999
C2S10234	JA-SB-13289
C2S4585	JA-LS-4044
C2S51264	JA-SB-13289
DG9C3289CA	FD-ES-14912
DG9C3290CA	FD-ES-14911
DG9C5500BXA (-)	FD-SB-15216
DG9C5500BXA (-)	FD-SB-15324
DG9C5A972AXD	FD-TC-15363
DG9C5C486AXC	FD-LS-14945
F32Z18192A	FD-SB-9662
F32Z18192B	FD-SB-9660
F32Z18192C	FD-SB-9662
F32Z18192D	FD-SB-9660
F32Z18198BA	FD-SB-9912
F32Z18A161AA	FD-SB-9912
F4BZ18A179B	FD-SB-9642
F57A3069CB	AMGK8705
F57A3A188AA	AMGK8704
F57Z3050BB	AMGK8695T
F5RC3280BA	FD-AX-4145
F5RC3280BA	FD-AX-4146
F5RC3280DA	FD-AX-4146
F5RC3280EA	FD-AX-2197
F5TZ3078A	AMGK8695T
F5TZ3082A	AMGK8710T
F65A5K483CC	FD-LS-5736
GA2A28380A	FD-SB-9662
GA2A28390A	FD-SB-9660
GA2A32280A	MD-ES-0621
GA2A34380	FD-SB-9912
GA2A3438XA	FD-SB-9912
GA5R34380	FD-SB-9912
GD7A28380	FD-SB-9662
GD7A28390	FD-SB-9660
KT2T143468AA	FD-BJ-0814
KT6C113K209AA	FD-BJ-8945
KTYC153468AC	FD-BJ-0814
KTYC153468AD	FD-BJ-0814
KTYC153468AE	FD-BJ-0814
MD10728775	FD-SB-9642

...FORD	MOOG
MD10728776	FD-SB-9642
NC1028340C	FD-SB-9642
NC1028775	FD-SB-9642
NC1028776	FD-SB-9642
OK2A134380A	FD-SB-9912
V85GB3078AB	FD-TC-3378
V85GB3079AB	FD-TC-3377
X1059G01	K150087
X1059G01	K150088
X1248A01	K150088
X1248A01	K150109
X1248A01	K150120
X1248A01	K150174
X4SC3290AB	FD-ES-4125
XS4C3K661BA	K150144
XS4C3K661BA	K150260
XS5C3L519AA	FD-AX-0270
XS5C3L519AA	FD-AX-4137
XS6C3K661AA	K150144
XS6C3K661AA	K150260
XS7J3289AA	FD-ES-4156
XS7J3290AA	FD-ES-4155
YC153069AG	FD-SB-2529
YC153395AB	FD-BJ-0814
YC153A052AH	FD-WP-2524
YC153A052AL	FD-WP-2525
YC153A052AM	FD-WP-2524
YC153A053AH	FD-WP-2525
YC153A053AJ	FD-WP-2524
YC153A053AM	FD-WP-2525
YC153A262AD	FD-SB-2528
YC153A262AF	FD-SB-2528
YC153K661AA	K150087
YC153K661AA	K150088
YC153K661BA	K150088
YC153K661BA	K150109
YC153K661BA	K150120
YC153K661BA	K150174
YC153L519AA	FD-AX-2527
YC153L519AB	FD-AX-2527
YC153L519BA	FD-AX-2526
YC153L519BB	FD-AX-2526
YC155C486AC	FD-LS-6620
YC155C486AD	FD-LS-5613
YC155C486AE	FD-LS-5613
YC1A3395BA	FD-BJ-0814
YC1A3395CA	FD-BJ-0814
YC1J3289AA	FD-ES-0957
YM213280AB	VO-DS-8256
YM213281AB	VO-DS-8257
YM213395BA	VO-BJ-0319
YS413B438AB	FD-LS-0950
YS413B438BA	FD-LS-0950
YS415K743AB	FD-TC-0952
YS4Z18A161AAA	FD-SB-9654
YS515484AA	FD-SB-15694

...FORD	MOOG
YS615484AC	FD-SB-15694
YS713042AA	FD-WP-4144
YS713042AB	FD-WP-4144
YS713051AB	FD-WP-4143
YS713B438AA	FD-LS-0950
YS713B438AA	FD-LS-4114
YS815484AA	FD-SB-6621

FSO	MOOG
4097451	FI-BJ-0262
4104861	FI-BJ-0262
4109626	FI-ES-0260
4140985	FI-BJ-0262
4150178	FI-BJ-3116
4168857	FI-DS-0259
4193224	FI-ES-0261
4327141	FI-DS-0259
4327142	FI-ES-0261
4327143	FI-ES-0261
4327144	FI-ES-0260
4343760	FI-ES-0260
4343762	FI-ES-0261
4365569	FI-BJ-3116
5880794	FI-BJ-0262
5969335	FI-BJ-0262
5995267	FI-ES-0260
5995268	FI-ES-0261
82275011	FI-BJ-3116
82315790	FI-ES-0261

HONDA	MOOG
06510 SMG 305	HO-SB-13588
2113302303	ME-ES-2728
2113302403	ME-ES-2729
486190D011	TO-SB-10085
51220S04003	HO-BJ-0167
51220S04003	HO-BJ-10427
51220S5A003	HO-BJ-6619
51220S5AJ10	HO-BJ-6619
51220S5AJ30	HO-BJ-6619
51220S74E00	HO-BJ-0167
51220S84A01	RO-BJ-104170
51220S84A02	RO-BJ-104170
51220S9A982	HO-BJ-10556
51220SAA013	HO-BJ-4919
51220SAAE01	HO-BJ-4919
51220SB0003	HO-BJ-10427
51220SB0023	HO-BJ-10427
51220SD4000	RO-BJ-3548
51220-SDA-305	HO-BJ-10683
51220SDAA02	HO-BJ-10683
51220SE0000	HO-BJ-10427
51220SE0003	HO-BJ-10427
51220SELT01	HO-BJ-4919
51220SF1000	HO-BJ-10427
51220SH3003	HO-BJ-10427

...HONDA	MOOG
51220SK7003	HO-BJ-10427
51220SK7013	HO-BJ-10427
51220SM0003	RO-BJ-104170
51220SM1A01	RO-BJ-104170
51220SM1A02	RO-BJ-104170
51220SM4003	RO-BJ-104170
51220SM4013	RO-BJ-104170
51220SNAA02	HO-BJ-10440
51220SNAA03	HO-BJ-10440
51220SR003	HO-BJ-0167
51220SR0A01	HO-BJ-0167
51220SR3003	HO-BJ-0167
51220SR3003	HO-BJ-10427
51220ST3E01	HO-BJ-0167
51220STKA01	HO-BJ-8094
51220TA0A01	HO-BJ-10126
51220TA0A02	HO-BJ-10126
51220TR0A01	HO-BJ-14808
51230SNAA02	HO-BJ-10439
51230SNAA03	HO-BJ-10439
51270SB0003	HO-BJ-10457
51270SB0013	HO-BJ-10457
51270SG9E00	RO-BJ-3549
51306 SMG E01	HO-SB-13588
51306 SMG E02	HO-SB-13588
51306 SMG E11	HO-SB-13588
51306S04N01	HO-SB-6718
51306S6D005	HO-SB-7945
51306S7B014	HO-SB-12669
51306S87A01	HO-SB-13430
51306SAAE01	HO-WP-2576
51306SEAE02	HO-SB-6852
51306SM4010	HO-SB-6724
51306SR3N00	HO-SB-6714
51306SWAA01	HO-SB-8099
51320S04003	HO-LS-1710
51320S2H003	HO-LS-2588
51320S5A003	HO-LS-2595
51320S84A01	HO-LS-3825
51320SAA003	HO-LS-2579
51320SAAJ01	HO-LS-8968
51320SEAE01	HO-LS-4687
51320SK3000	RO-LS-1831
51320SMGE01	HO-LS-5727
51320SNAA02	HO-LS-10518
51320STKA01	HO-LS-7941
51320TF0003	HO-LS-10514
51321S2H003	HO-LS-2587
51321S5A003	HO-LS-2594
51321S84A01	HO-LS-3824
51321SAA003	HO-LS-2578
51321SAAJ01	HO-LS-8967
51321SEAE01	HO-LS-4632
51321SNAA02	HO-LS-10517
51325TA0A01	HO-LS-13697
51350S04000	HO-WP-0965

...HONDA	MOOG
51350S04000 (-)	HO-SB-2541
51350S04000 (-)	HO-SB-2542
51350S04G00	HO-WP-0965
51350S5AA03	HO-WP-2549
51350S6AA00	HO-WP-2549
51350S6DG00	HO-WP-2549
51350S9A010	HO-WP-2593
51350S9A10	HO-WP-2593
51350SAAE01	HO-WP-2577
51350SAAE11	HO-WP-2577
51350SAAG02	HO-WP-2577
51350SDAA01	HO-TC-5072
51350SEAE01	HO-TC-5072
51350SR3020	RO-WP-0504
51350SR3A01	RO-WP-0504
51350SR3A02	HO-SB-1371
51350SR3A02	RO-WP-0504
51350ST3E02	RO-WP-0504
51350ST3G00	RO-WP-0504
51350ST7010	RO-WP-0504
51350SWAE01	HO-WP-8098
51350SWAE01 (-)	HO-SB-14743
51350TF0030	HO-WP-10790
51350TF0030 (-)	HO-BJ-10747
51350TF0030 (-)	HO-SB-10786
51350TF0030 (-)	HO-SB-10787
51350TF0030 (-)	HO-SB-10788
51351SB2013	HO-TC-10867
51351SB6931	HO-TC-10867
51351SR3020	RO-WP-0504
51355S1AE00 (-)	HO-SB-2560
51355SH3010	HO-SB-1371
51355SH3020	HO-SB-1371
51355SK3000	RO-TC-3551
51355SV4000	HO-WP-2565
51355SV7A00	HO-WP-2565
51360S04000	HO-WP-0966
51360S04G00	HO-WP-0966
51360S04G00 (-)	HO-SB-2541
51360S04G00 (-)	HO-SB-2542
51360S5AA03	HO-WP-2548
51360S6AA00	HO-WP-2548
51360S6DG00	HO-WP-2548
51360S9A010	HO-WP-2592
51360S9A10	HO-WP-2592
51360SAAE01	HO-WP-2576
51360SAAE11	HO-WP-2576
51360SAAJ01	HO-WP-2576
51360SCAS00	HO-WP-2592
51360SDAA01	HO-TC-5071
51360SEAE01	HO-TC-5071
51360SR3020	RO-WP-0505
51360SR3A01	RO-WP-0505
51360SR3A02	HO-SB-1371
51360SR3A02	RO-WP-0505
51360ST3E02	RO-WP-0505

...HONDA	MOOG
51360ST3G00	RO-WP-0505
51360ST7010	RO-WP-0505
51360SWAE00	HO-WP-8097
51360SWAE01	HO-WP-8097
51360SWAE01 (-)	HO-SB-14743
51360TF0030	HO-WP-10789
51360TF0030 (-)	HO-BJ-10747
51360TF0030 (-)	HO-SB-10786
51360TF0030 (-)	HO-SB-10787
51360TF0030 (-)	HO-SB-10788
51361SB2013	HO-TC-10870
51361SB2672	HO-TC-10870
51361SB6931	HO-TC-10870
51365S1AE00 (-)	HO-SB-2560
51365SH3010	HO-SB-1371
51365SH3020	HO-SB-1371
51365SK3000	RO-TC-3550
51365SV4000	HO-WP-2564
51365SV7A00	HO-WP-2564
51391S04005	HO-SB-2573
51391S5A024	HO-SB-2553
51391SEA004	HO-SB-8956
51391TA0A01	HO-SB-14064
51391TR0305	HO-SB-15232
51392S5A004	HO-SB-2552
51392SR3014	HO-SB-2342
51392SR3024	HO-SB-2342
51393SEA004	HO-SB-10436
51393SH3003	HO-SB-4413
51393SK3000	RO-SB-2840
51393SM4013	HO-SB-3979
51395SR3N02	HO-SB-12651
51395SR3N03	HO-SB-12651
51396SR3N02	HO-SB-12648
51396SR3N03	HO-SB-12648
51450S01023	HO-WP-1805
51450S01A02	HO-WP-1805
51450S04013	HO-WP-1805
51450S04023	HO-WP-1805
51450S04023 (-)	HO-SB-2540
51450S10020	HO-WP-2567
51450S1AE01	HO-WP-0824
51450S1AE01 (-)	HO-SB-2561
51450S2X003	HO-WP-0824
51450S84A01	HO-WP-0824
51450SDAA01	HO-WP-5070
51450SDAA01 (-)	HO-BJ-10953
51450SDAA01 (-)	HO-SB-8955
51450SH3000	HO-WP-0596
51450SH3010	HO-WP-0596
51450SH3020	HO-WP-0596
51450SH3023	HO-WP-0596
51450SH3030	HO-WP-0596
51450SK7043	HO-WP-0596
51450SM4013	HO-WP-0322
51450SM4023	HO-WP-0322

...HONDA	MOOG
51450SM4A02	HO-WP-0322
51450SR0A02	HO-WP-0165
51450SR0A02	HO-WP-0166
51450SR3013	HO-WP-0165
51450SR3013	HO-WP-0166
51450SR3023	HO-WP-0166
51450SR3A02	HO-WP-0165
51450SR3A02	HO-WP-0166
51450ST3E02	HO-SB-1370
51450ST3E10	HO-WP-0166
51450ST7020	HO-WP-0166
51450SV4000	HO-WP-0439
51450SV4000	HO-WP-0440
51450SV4A00	HO-WP-0439
51450SV4A00 (-)	RO-SB-4251
51455SR3003	HO-SB-1370
51460S01023	HO-WP-1804
51460S01A02	HO-WP-1804
51460S04013	HO-WP-1804
51460S04013	HO-WP-2566
51460S04023	HO-WP-1804
51460S04023	HO-WP-1805
51460S04023	HO-WP-2567
51460S04023 (-)	HO-SB-2540
51460S10020	HO-WP-2566
51460S1AE01	HO-BJ-3290
51460S1AE01	HO-WP-0823
51460S1AE01 (-)	HO-SB-2561
51460S2X003	HO-WP-0823
51460S84A01	HO-WP-0823
51460SDAA01	HO-WP-5069
51460SDAA01 (-)	HO-BJ-10953
51460SDAA01 (-)	HO-SB-8955
51460SH3000	HO-WP-0597
51460SH3010	HO-WP-0597
51460SH3020	HO-WP-0597
51460SH3023	HO-WP-0597
51460SH3030	HO-WP-0597
51460SK7043	HO-WP-0597
51460SM4013	HO-WP-0323
51460SM4023	HO-WP-0323
51460SM4A02	HO-WP-0323
51460SR0A02	HO-WP-0165
51460SR0A02	HO-WP-0166
51460SR3003	HO-WP-0165
51460SR3013	HO-WP-0165
51460SR3013	HO-WP-0166
51460SR3023	HO-WP-0165
51460SR3A02	HO-WP-0165
51460SR3A02	HO-WP-0166
51460ST3E02	HO-SB-1370
51460ST3E10	HO-WP-0165
51460ST7020	HO-WP-0165
51460SV4000	HO-WP-0439
51460SV4000	HO-WP-0440
51460SV4A00	HO-WP-0440

...HONDA	MOOG
51460SV4A00 (-)	RO-SB-4251
51510TA0A03	HO-WP-10830
51520TA0A03	HO-WP-10829
51621S84A01	HO-SB-9762
51621S84A01	HO-SB-9766
51631S2A004	HO-SB-9768
51675S10004	HO-SB-9750
51675S84A01	HO-SB-9756
51675SDAA01	HO-SB-10073
51675SR0004	HO-SB-9750
51685SR0004	HO-SB-9762
51686S84A01	HO-SB-9756
51686SDAA01	HO-SB-10073
51686SR0003	HO-SB-9750
51689S2A004	HO-SB-9768
51689SH3004	HO-SB-9768
51722SE0003	HO-SB-9730
51726S5A002	HO-SB-9740
51726S5A004	HO-SB-9740
51726-SFA 005	HO-SB-10966
51726SNA013	HO-SB-10072
51726SNAG01	HO-SB-10072
51728SR0003	HO-SB-9762
51728SR0003	HO-SB-9766
51728SR0003	HO-SB-9768
51810SDAA01	HO-SB-8952
51810SH3003	HO-SB-8479
51810SH3004	HO-SB-8479
51810SM4004	AMGK9761
51810SM4004	HO-SB-1371
51920S5A024	HO-SB-9740
51920S6M014	HO-SB-9740
51920S6MJ02	HO-SB-9740
51920-SCC-005	HO-SB-10966
51920-SCC-015	HO-SB-10966
51920SNA023	HO-SB-10072
51920SVBA03	HO-SB-10072
51920-SWA-A01	HO-SB-10967
51923SB2004	HO-SB-9762
52220SF1003	RO-BJ-104170
52306S0A015	HO-SB-6853
52306-S5A-003	HO-SB-10956
52306S84A01	HO-SB-13430
52306S9A005	HO-SB-15647
52306SDAA01	HO-SB-6853
52306SVBA01	HO-SB-13591
52306TA1A02	HO-SB-14648
52315S04N00	HO-SB-6719
52315SR3000	HO-SB-6715
52320S04003	HO-LS-1742
52320S10003	HO-LS-2568
52320S10003	HO-LS-4192
52320S2H003	HO-LS-10098
52320S5A013	HO-LS-5726
52320S84A01	HO-LS-1840
52320S9A003	HO-LS-4550

...HONDA	MOOG
52320SDAA01	HO-LS-1840
52320SED003	HO-LS-13433
52320SNAA01	HO-LS-7900
52320SWAA01	HO-LS-7943
52320TA0A01	HO-LS-10122
52321S04003	HO-LS-1741
52321S10003	HO-LS-2568
52321S10003	HO-LS-4192
52321S2H003	HO-LS-10099
52321S5A013	HO-LS-5725
52321S9A003	HO-LS-4549
52321SNAA01	HO-LS-7899
52321SWAA01	HO-LS-7942
52325S84A01	HO-LS-1842
52325SDAA01	HO-LS-1842
52325TA0A01	HO-LS-10121
52365SH3000	HO-SB-4462
52370SR3J00	HO-SB-4043
52385SR3000	HO-SB-1858
52385ST3G01	HO-SB-1858
52390S84A01	HO-TC-4042
52390SCVA11	AMGK90489
52390SH3030	HO-WP-2537
52390SH3A00	HO-WP-2537
52390SR0A00	HO-WP-2537
52390SR3000	HO-WP-2537
52390SR3A00	HO-WP-2537
52390SWAA00	HO-TC-13233
52393SR3004	HO-SB-13434
52395SH3004	HO-SB-13258
52400SCVA11	AMGK90489
52400SH3030	HO-WP-2536
52400SR0A00	HO-WP-2536
52400SR3000	HO-WP-2536
52400SR3A00	HO-WP-2536
52621634000	HO-SB-9760
52621S5DA01	HO-SB-9766
52621SB2004	HO-SB-9760
52621SK3000	HO-SB-9760
52622S84A01	HO-SB-9730
52622SDAA01	HO-SB-9730
52622SH3010	HO-SB-4460
52631S5A004	HO-SB-9766
52675S84A01	HO-SB-9758
52675SEPA02	HO-SB-9758
52675SR0003	HO-SB-9752
52675TL1E01	HO-SB-9758
52685S5A004	HO-SB-9766
52686S84A01	HO-SB-9758
52686SDAA01	HO-SB-9758
52686SR0003	HO-SB-9752
52722SR2003	HO-SB-9730
52728S0A004	HO-SB-9768
52728SK3000	HO-SB-9760
52728SM1A02	HO-SB-9760
53010S10000	HO-AX-2569

...HONDA	MOOG
53010S10003	HO-AX-2569
53010S2HJ01	HO-AX-2589
53010S2HJ02	HO-AX-2589
53010S84A01	HO-AX-5447
53010SAAJ01	HO-AX-2581
53010SDAA01	HO-AX-5075
53010SEL003	HO-AX-12634
53010SR3010	HO-AX-1625
53010SS0000	HO-AX-2584
53010ST0000	HO-AX-1625
53010ST7J61	HO-AX-1625
53010STO000	HO-AX-1625
53010SV4000	HO-AX-2538
53010SWCG01	HO-AX-8738
53010SWCG02	HO-AX-8738
53010T0AA01	HO-AX-14642
53010TF0003	HO-AX-10513
53011SAAJ01	HO-AX-2580
53011SEL003	HO-AX-12633
53321S04003	HO-LS-1741
53521S5A003	HO-AX-3844
53521S9A003	HO-AX-5528
53521SB0000	HO-AX-2349
53521SB0003	HO-AX-2349
53521SF1003	HO-AX-2349
53521SH3003	HO-AX-2938
53521SM4003	HO-AX-1781
53521SM4013	HO-AX-1781
53534634000	K150006
53534634020	K150006
53534S2HJ01	K150185
53534S84A01	K150183
53534S9A003	K150249
53534SA5951	K150051
53534SB4951	K150051
53534SB4952	K150051
53534SD4000	K150051
53534SE0A52	K150051
53534SEAG02	K150250
53534SEDG01	K150251
53534SL4J01	K150155
53534SR3N52	K150103
53534SR3N52	K150155
53534ST0013	K150155
53534SV1003	K150155
53534SV1N01	K150155
53534SV4003	K150155
53534SV4N01	K150155
53535S2HJ01	K150185
53536S1AE01	K150154
53536S9A003	K150249
53540611010	RO-ES-2095
53540611020	RO-ES-2095
53540634000	RO-ES-2095
53540659003	RO-ES-2095
53540671010	RO-ES-2095

...HONDA	MOOG
53540679004	RO-ES-2095
53540S04003	HO-ES-0171
53540S04013	HO-ES-0171
53540S04013	HO-ES-2944
53540S04013	HO-ES-2947
53540S1AE01	HO-ES-2555
53540S7S003	HO-ES-8096
53540S84A01	HO-ES-2555
53540S84A01	RO-ES-3154
53540SA0002	RO-ES-2095
53540SA0003	RO-ES-2095
53540SAA003	HO-ES-2583
53540SADM01	HO-ES-2583
53540SB0003	RO-ES-2095
53540SB2002	RO-ES-2095
53540SB2003	RO-ES-2095
53540SB2013	RO-ES-2095
53540SC2003	RO-ES-2095
53540SC2004	RO-ES-2095
53540SD4003	RO-ES-3446
53540SDAA01	HO-ES-5074
53540SDAA02	HO-ES-5074
53540SELT01	HO-ES-2583
53540SF1004	HO-ES-2942
53540SH3000	HO-ES-2944
53540SH3003	HO-ES-2944
53540SH3003	HO-ES-2947
53540SH3013	HO-ES-2944
53540SK3E01	RO-ES-3547
53540SM4003	HO-ES-2555
53540SM4003	RO-ES-3154
53540SM4004	HO-ES-2555
53540SM4004	RO-ES-3154
53540SMG003	HO-ES-7049
53540SMJ003	HO-ES-5729
53540SMJ003	HO-ES-7049
53540SNAA01	HO-ES-13261
53540SNAA01	HO-ES-13262
53540SNAA02	HO-ES-13262
53540SR0A01	HO-ES-0171
53540SR0A01	HO-ES-2944
53540SR0A01	HO-ES-2947
53540SR3003	HO-ES-0171
53540SR3003	HO-ES-2944
53540SR3003	HO-ES-2947
53540SS0003	HO-ES-2586
53540SS0004	HO-ES-2586
53540ST7003	HO-ES-0171
53540SV4003	HO-ES-2555
53540SV4003	RO-ES-3154
53540SV4013	HO-ES-2555
53540SWAA01	HO-ES-8096
53540SWAA02	HO-ES-8096
53540SX0003	HO-ES-2555
53540SX8T01	HO-ES-2575
53540T1GE01	HO-ES-14810

...HONDA	MOOG
53540TF0003	HO-ES-10516
53541S5A003	HO-ES-2547
53560S04003	HO-ES-0170
53560S04013	HO-ES-0170
53560S1AE01	HO-ES-2554
53560SAA003	HO-ES-2582
53560SADM01	HO-ES-2582
53560SD4003	RO-ES-3447
53560SDAA01	HO-ES-5073
53560SELT01	HO-ES-2582
53560SH3000	HO-ES-0170
53560SH3003	HO-ES-0170
53560SH3003	HO-ES-2947
53560SH3013	HO-ES-2947
53560SM4003	RO-ES-3153
53560SM4003	RO-ES-3154
53560SM4004	RO-ES-3153
53560SM4004	RO-ES-3154
53560SMG003	HO-ES-7048
53560SMJ003	HO-ES-5728
53560SMJ003	HO-ES-7048
53560SN4004	RO-ES-3153
53560SNAA01	HO-ES-13261
53560SNAA02	HO-ES-13261
53560SR0A01	HO-ES-0170
53560SR0A02	HO-ES-0171
53560SR3003	HO-ES-0170
53560SS0003	HO-ES-2585
53560SS0004	HO-ES-2585
53560ST7003	HO-ES-0170
53560SV4003	RO-ES-3153
53560SV4003	RO-ES-3154
53560SV4013	RO-ES-3153
53560T1GE01	HO-ES-14809
53560TF0003	HO-ES-10515
53603S5AJ01	K150229
53610SNBJ01	HO-AX-13311
53610TL1G01	HO-AX-10125
56521692003	HO-AX-2349
56521SA0003	HO-AX-2349
85 93 3650	HO-LS-13698
90112SE0000	HO-LS-1605
90112SM4020	HO-LS-8942
RBX100670	HO-SB-2342

HYUNDAI	MOOG
0K01134777A	KI-SB-9792
0K2A13446X	KI-SB-8922
0K2A13446Y	KI-SB-8921
0K2C034460	KI-SB-8914
0K2NA28380	KI-SB-9824
0K2NA28380A	KI-SB-9824
0K2NA28390	KI-SB-9822
0K2NA28390A	KI-SB-9822
0K55232250B	KI-AX-10602
0K55A28156	KI-SB-13352

...HYUNDAI	MOOG
0KX4334150	KI-LS-13943
0S08534150	KI-LS-13943
4869387703	HY-SB-9770
517600Q000	KI-BJ-7094
517601G000	HY-BJ-4749
517602E000	HY-BJ-3977
517602E010	HY-BJ-3977
517602G000	KI-BJ-7094
517602H000	KI-BJ-7094
517602R000	KI-BJ-13409
5176038000	HY-BJ-2662
517603K000	HY-BJ-4747
5176138A00	HY-BJ-2662
53534634000	K150006
53534634020	K150006
543803U000	HY-LS-14801
5441038000	HY-WP-7360
544103F600	HY-WP-10593
544103F601	HY-WP-10593
544103K000	HY-WP-10594
5441043004	HY-WP-7329
5441043005	HY-WP-7329
5441743A00	HY-BJ-1214
5441747000	HY-BJ-1214
544174A000	HY-BJ-1214
544174AA00	HY-BJ-1214
544174BA00	HY-BJ-1214
5442038000	HY-WP-7361
544203F600	HY-WP-10594
544203F601	HY-WP-10594
544203K000	HY-WP-10593
5443043004	HY-WP-7330
5443043005	HY-WP-7330
54440H1000	HY-BJ-10599
5445743001	HY-BJ-1214
5450002050	HY-WP-2623
5450002051	HY-WP-2623
5450002052	HY-WP-2623
545000J000	HY-WP-7085
545000X000	HY-WP-10567
545000X100	HY-WP-10567
545000X200	HY-WP-10567
545000X300	HY-WP-10567
5450017000	HY-WP-2633
545001C000	HY-WP-2647
545001C010	HY-WP-2647
545001E000	HY-WP-7085
545001E100	HY-WP-7083
545001F000	KI-WP-8423
545001J500	HY-WP-10433
545001J700	HY-WP-10433
545001R000	HY-WP-13263
5450022000	HY-WP-3148
5450022100	HY-WP-3148
5450022200	HY-WP-3148
5450025000	HY-WP-2630

...HYUNDAI	MOOG
5450029000	HY-WP-2621
5450029500	HY-WP-2621
545002B000	HY-WP-4940
545002B100	HY-WP-4940
545002D000	HY-WP-2650
545002D001	HY-WP-2650
545002D002	HY-WP-2650
545002E000	KI-WP-8423
545002E001	KI-WP-8423
545002E010	KI-WP-8423
545002F000	KI-WP-8943
545002F001	KI-WP-8943
545002H000	KI-WP-7095
545002H100	KI-WP-7095
545002P000	HY-WP-4940
545002Y000	HY-WP-13301
5450038000	HY-WP-2665
5450038011	HY-WP-7362
545003K000	HY-WP-10589
545003K060	HY-WP-10589
545004A000	HY-TC-8891
545004A600	HY-TC-8891
545004H000 (-)	HY-SB-13785
545004H000 (-)	HY-SB-13786
54500FD000 (-)	KI-SB-13277
5450102050	HY-WP-2624
5450102051	HY-WP-2624
5450102052	HY-WP-2624
545010J000	HY-WP-7086
545010X000	HY-WP-10568
545010X100	HY-WP-10568
545010X200	HY-WP-10568
545010X300	HY-WP-10568
5450117000	HY-WP-2634
545011C000	HY-WP-2648
545011C000 (-)	HY-SB-5646
545011C000 (-)	HY-SB-5647
545011C010	HY-WP-2648
545011E000	HY-WP-7086
545011E100	HY-WP-7084
545011F000	KI-WP-8424
545011J500	HY-WP-10434
545011R000	HY-WP-13264
5450122000	HY-WP-3149
5450122100	HY-WP-3149
5450122200	HY-WP-3149
5450125000	HY-WP-2631
5450126000	HY-WP-2612
5450129000	HY-WP-2622
5450129500	HY-WP-2622
545012B000	HY-WP-4941
545012B100	HY-WP-4941
545012D000	HY-WP-2651
545012D001	HY-WP-2651
545012D002	HY-WP-2651
545012E000	KI-WP-8424

...HYUNDAI	MOOG
545012E001	KI-WP-8424
545012E010	KI-WP-8424
545012F000	KI-WP-8944
545012F001	KI-WP-8944
545012H000	KI-WP-7096
545012H100	KI-WP-7096
545012P000	HY-WP-4941
545012Y000	HY-WP-13302
5450138000	HY-WP-2666
5450138011	HY-WP-7363
545013K000	HY-WP-10590
545013K060	HY-WP-10590
545014A000	HY-TC-8892
545014A600	HY-TC-8892
545014H000 (-)	HY-SB-13785
545014H000 (-)	HY-SB-13786
54501FD000 (-)	KI-SB-13277
5450226000	HY-WP-2614
5450322A00	MI-BJ-10371
5450325A00	MI-BJ-10371
545032BA00	HY-BJ-2629
5450331600	MI-BJ-10371
5450334A00	HY-BJ-1190
5450334A01	HY-BJ-1190
5450338A00	MI-BJ-10371
545033BA00	HY-BJ-2629
5451043150	MI-TC-1628
5451043150	MI-TC-1677
5451043151	MI-TC-1677
5451043152	MI-TC-1628
5451043152	MI-TC-1677
5452031600	MI-BJ-10371
545224B000	HY-SB-14674
545224B010	HY-SB-14674
5452443001	MI-BJ-0350
5453002000	HY-BJ-1614
5453002050	HY-BJ-1614
5453002500	HY-BJ-1614
5453007000	KI-BJ-4757
545300X000	KI-BJ-4757
5453024000	HY-BJ-0393
5453024A00	HY-BJ-0344
5453024A00	HY-BJ-0393
5453025000	MI-BJ-10371
5453025A00	MI-BJ-10371
5453028000	HY-BJ-0344
5453028A00	HY-BJ-0344
5453028A00	HY-BJ-0393
545302B000	HY-BJ-2629
5453031600	MI-BJ-10371
5453037000	HY-BJ-1190
5453037010	HY-BJ-1190
5453038600	HY-LS-3938
545303A200	HY-BJ-10600
545303B000	HY-BJ-2642
545303J000	KI-BJ-8938

...HYUNDAI	MOOG
545303S000	HY-BJ-10813
545304A000	HY-BJ-1607
545304A000	MI-BJ-0350
545304AA00	HY-BJ-1607
545304AA00	MI-BJ-0350
545304D000	KI-BJ-8938
5454043150	MI-TC-1628
5454043150	MI-TC-1677
5454043151	MI-TC-1628
5454043151	MI-TC-1677
5454043152	MI-TC-1628
5454043152	MI-TC-1677
545502P000	HY-SB-8067
54550H1000	HY-BJ-2596
54550H1010	HY-BJ-2596
5455102000	HY-SB-10561
5455107000	KI-SB-5149
545511C000	HY-SB-2635
545511E000	HY-SB-7088
545511J000	HY-SB-10831
5455122000	HY-SB-10561
5455122100	HY-SB-10561
5455122200	HY-SB-10561
5455125000	HY-SB-2635
545512B000	HY-SB-8067
545512E000	KI-SB-10584
545512H000	KI-SB-7097
545512S000	HY-SB-13299
545513A000	HY-SB-2643
545513X000	HY-SB-13367
545514H000	HY-SB-13785
5455522000	HY-SB-10559
5455522100	HY-SB-10559
5455522101	HY-SB-10559
5455522102	HY-SB-10559
5455525000	HY-SB-7323
5455526000	HY-SB-2644
545553A100	HY-SB-2644
5455622000	HY-SB-10560
5455622100	HY-SB-10560
5455622101	HY-SB-10560
5455622102	HY-SB-10560
5458417000	HY-SB-2636
545841G000	HY-SB-7087
545841J000	HY-SB-10832
545842B000	HY-SB-8070
545842E000	HY-SB-10725
545842H000	KI-SB-7098
545842S000	HY-SB-13300
545842T000	HY-SB-14721
5458438000	HY-SB-14669
5458438010	HY-SB-14669
5458438100	HY-SB-8957
545843J000	HY-SB-8070
545843S000	HY-SB-13300
545843X000	HY-SB-13705

...HYUNDAI	MOOG
545844H000	HY-SB-13786
546033E00	KI-SB-9801
546043E100	KI-SB-9801
546063E000	KI-SB-9801
546073E000	KI-SB-9801
546093E000	KI-SB-9801
5461025000	HY-SB-9778
5461025000	HY-SB-9780
5461029000	HY-SB-9772
546102B000	HY-SB-9816
546102D000	HY-SB-9772
5461034000	HY-SB-9782
5461034010	HY-SB-9782
5461037100	HY-SB-9788
546104D000	HY-SB-9816
5461122000	HY-SB-9786
546123J000	HY-SB-9816
546124D000	HY-SB-9816
546303F600	HY-SB-10075
546303K000	HY-SB-10075
546303L000	HY-SB-10075
546303L100	HY-SB-10075
546413K000	HY-SB-10075
548113E110	KI-LS-13255
548113E160	KI-LS-13256
5481207100	KI-SB-10607
548121C000	HY-SB-14672
548121C500	HY-SB-14672
548121G100	HY-SB-10562
548130Z000	KI-SB-13355
5481317100	HY-SB-12670
54813-1H100	HY-SB-14837
548131J000	HY-SB-12672
5481325000	HY-SB-12668
5481326000	HY-SB-12674
5481326100	HY-SB-12674
548132C100	HY-SB-14667
548132D001	HY-SB-14667
548132E100	KI-SB-10619
54813-2H000	HY-SB-8895
548132S000	HY-SB-15267
548133X000	HY-SB-13703
548133X001	HY-SB-13703
548134D000	KI-SB-10603
5482002000	HY-LS-0971
54822H1000	HY-LS-10595
54823H1000	HY-LS-10596
5482522000	HY-LS-7068
5483007000	KI-LS-4883
548300U000	HY-LS-13297
548300X000	KI-LS-4883
548300X500	HY-LS-13467
5483017010	HY-LS-1833
5483017020	HY-LS-2233
548301C000	HY-LS-1911
548301C100	HY-LS-1911

...HYUNDAI	MOOG
548301E000	HY-LS-7081
548301E100	HY-LS-7081
548301G000	HY-LS-7081
548301G500	HY-LS-7081
548301J000	HY-LS-7937
5483025000	HY-LS-10113
5483025010	HY-LS-1833
5483025020	HY-LS-2233
5483026000	HY-LS-2625
5483026100	HY-LS-2625
5483029000	HY-LS-1845
5483029500	HY-LS-1845
548302B000	HY-LS-4942
548302B200	HY-LS-4942
548302C000	HY-LS-4690
548302E000	HY-LS-3941
548302E100	HY-LS-3941
548302H000	KI-LS-7090
548302H100	KI-LS-7090
548302H200	KI-LS-7090
548302K000	KI-LS-10613
548302S000	HY-LS-10809
548302S200	HY-LS-10809
5483034000	HY-LS-2610
5483034000	HY-LS-2649
5483034500	HY-LS-2610
5483034500	HY-LS-2649
5483038100	HY-LS-2652
5483038100	HY-LS-3937
5483038110	HY-LS-2652
5483038110	HY-LS-3937
5483039000	HY-LS-2652
548303A000	HY-LS-2638
548303K000	HY-LS-4748
548303K010	HY-LS-4748
548303L000	HY-LS-4748
548303U000	HY-LS-14801
548303W300	HY-LS-10809
548304A000	HY-LS-3998
548304A002	HY-LS-3998
548304A003	HY-LS-3998
548304A600	HY-LS-3998
548304A800	HY-LS-3998
548304A802	HY-LS-3998
548304H000	HY-LS-8907
548304H200	HY-LS-8907
548304L000	HY-LS-13297
54830B4000	HY-LS-13467
54830C8000	HY-LS-14946
5484007000	KI-LS-4884
548400X000	KI-LS-4884
548400X500	HY-LS-13468
548401C000	HY-LS-1910
548401C100	HY-LS-1910
548401E000	HY-LS-7082
548401E100	HY-LS-7082

...HYUNDAI	MOOG
548401G000	HY-LS-7082
548401G500	HY-LS-7082
548401J000	HY-LS-7936
5484026000	HY-LS-2626
5484026100	HY-LS-2626
548402B000	HY-LS-4943
548402B200	HY-LS-4943
548402C000	HY-LS-4691
548402K000	KI-LS-10614
548403A000	HY-LS-2639
548404D000	KI-LS-8934
548404H000	HY-LS-8908
548404H200	HY-LS-8908
54840B4000	HY-LS-13468
551304D000	KI-BJ-8941
551601R000	HY-SB-13704
5521017000	HY-TC-13323
5522017000	HY-TC-13324
5522526500	HY-SB-15325
552300W000	HY-TC-14695
552302B000	HY-TC-14695
552302B100	HY-TC-14695
552302P000	HY-TC-14695
552303J000	HY-TC-14695
552400W000	HY-TC-14696
552402B000	HY-TC-14696
552402B100	HY-TC-14696
552402P000	HY-TC-14696
552403J000	HY-TC-14696
552502H000	HY-LS-8896
552532S000	HY-SB-14744
5531026000	HY-SB-9790
5531029000	HY-SB-9774
55311-1G000	HY-SB-10968
5531122000	HY-SB-9770
5531526000	HY-SB-9790
5532026000	HY-SB-9790
5532029000	HY-SB-9776
5532526500	HY-SB-9790
5534126000	HY-SB-9790
5551317000	HY-SB-12671
5551322500	HY-SB-10752
555132B200	HY-SB-10931
555132C110	HY-SB-14670
555132E000	KI-SB-13355
555132S100	HY-SB-14732
555133N100	HY-SB-13760
555133N200	HY-SB-13759
555133N300	HY-SB-15293
5553017000	KI-LS-7131
5553017010	KI-LS-7131
555301H000	KI-LS-7099
555301H100	KI-LS-7099
5553026600	HY-LS-4688
5553026700	HY-LS-4688
5553029000	HY-LS-2380

...HYUNDAI	MOOG
5553029500	HY-LS-2380
555302B000	HY-LS-4944
555302B200	HY-LS-4944
555302E000	HY-LS-3940
555302E100	HY-LS-3940
555302H000	KI-LS-7099
555302S100	HY-LS-10519
555302S200	HY-LS-10519
5553038000	HY-LS-2667
5553038010	HY-LS-2667
5553038600	HY-LS-3938
555303K000	HY-LS-10588
555303K001	HY-LS-10588
555303R000	HY-LS-13305
555304A000	HY-LS-3999
555304A001	HY-LS-3999
555304D000	KI-LS-8842
555304D000	KI-LS-8933
555304H000	HY-LS-8911
5554026600	HY-LS-4689
5554026700	HY-LS-4689
555403R000	HY-LS-13305
555404H000	HY-LS-8912
5558037020	HY-LS-2616
5558037030	HY-LS-2616
55823H1000	HY-LS-10597
5583025000	HY-LS-10113
5645024001	HY-AX-0969
5652824000	K150175
5654002000	HY-AX-0971
5654022000	HY-ES-1705
5654024000	HY-ES-1705
5654024001	HY-ES-1705
5654025000	HY-AX-0969
5654025000	HY-AX-2615
565402H000	KI-AX-7089
565402K000	KI-AX-10615
56540C8000	HY-AX-14980
5654243001	HY-AX-1820
5682002500	HY-ES-1637
568200X000	HY-ES-8856
568200X010	HY-ES-8856
568200X900	HY-ES-8856
568201E000	HY-ES-4881
568201E900	HY-ES-4882
5682021000	MI-ES-2171
5682021100	MI-ES-2171
5682021110	MI-ES-2171
5682022000	HY-ES-0172
5682025000	HY-ES-0172
5682028000	HY-ES-1637
5682028000	HY-ES-1657
5682028500	HY-ES-0172
5682028520	HY-ES-0172
568202B000	HY-ES-4938
568202B900	HY-ES-4939

...HYUNDAI	MOOG
568202E000	HY-ES-3887
568202E900	HY-ES-3886
568202H000	HY-ES-7092
568202H090	HY-ES-7093
568202K000	KI-ES-8767
568202K050	KI-ES-8766
568202S000	HY-ES-10811
568202S050	HY-ES-10812
568202T100	HY-ES-10812
568202T190	HY-ES-10811
5682036000	HY-ES-0172
5682037000	HY-ES-0172
5682037010	HY-ES-0172
5682038000	HY-ES-2617
5682038900	HY-ES-2618
5682039000	HY-ES-2618
568203B000	HY-ES-1906
568203K000	HY-ES-4879
568203K010	HY-ES-4880
568203Q000	HY-ES-10811
568203Q500	HY-ES-10812
568203S000	HY-ES-10811
568203S050	HY-ES-10812
568204A000	MI-ES-3044
568204A600	MI-ES-3044
568204D000	KI-ES-8935
568204D001	KI-ES-8935
568204D100	KI-ES-8936
568204D101	KI-ES-8936
568204L000	HY-ES-13701
568204L090	HY-ES-13702
56820C8000	HY-ES-14981
56820C8900	HY-ES-14982
568212B000	HY-ES-4938
568212B900	HY-ES-4939
56850H1011	HY-DS-10598
56872037010	HY-ES-0172
5687243000	HY-ES-1163
5687243000	MI-ES-2937
5687243000	MI-ES-3044
5687243010	HY-ES-1163
5687243010	MI-ES-2937
5687243010	MI-ES-3044
572242D020	HY-AX-2620
5771634000	HY-AX-1818
5771634000	HY-AX-2637
577240X000	HY-AX-8358
577240X010	HY-AX-8358
577241E000	HY-AX-7080
577241J000	HY-AX-8894
577242B000	HY-AX-2432
577242D000	HY-AX-2620
577242D020	HY-AX-2620
577242E000	HY-AX-3892
577242S000	HY-AX-10810
5772438000	HY-AX-1819

...HYUNDAI	MOOG
5772438010	HY-AX-1819
577243A000	HY-AX-1818
577243A000	HY-AX-2632
577243A000	HY-AX-2637
577243K000	HY-AX-10587
577244D000	KI-AX-8937
577244H000	HY-AX-8897
577244H100	HY-AX-8898
577244L000	HY-AX-13278
577244L090	HY-AX-15338
5772817000	K150262
577294A000	HY-AX-7293
5773024000	HY-AX-1820
5773024100	HY-AX-1733
5773028500	HY-AX-1820
5773029000	HY-AX-1718
5773029001	HY-AX-1718
5773043000	HY-AX-1820
5773043010	HY-AX-1820
577402D000	K150189
5774038000	K150086
5775502000	HY-AX-0009
5775517000	HY-AX-2632
5775517000	HY-AX-2637
5775517800	HY-AX-2632
577551C000	HY-AX-2646
5775522000	HY-AX-1820
5775525000	HY-AX-0969
5775525000	HY-AX-2615
577744A000	K150186
5777525000	HY-AX-2615
5778038000	HY-ES-2617
5778038010	HY-ES-2618
5778526200	HY-AX-1818
5778526200	HY-AX-2628
5778526200	HY-AX-2632
91510864	K150045
HB212100	HY-BJ-1658
HB568100	HY-DS-1771
HB568110	MI-ES-2245
HB568120	MI-ES-2246
K20128380A	KI-SB-9794
KKY0134460	MD-SB-10608
MB 109 684	MI-SB-5489
MB241206	MI-ES-2245
MB242358	MI-SB-9934
MB243425A	HY-DS-1771
MB315776	MI-ES-2245
MB338620	MI-SB-9934
MB347599	MI-ES-3044
MB518892	MI-LS-2768
MB527650	MI-ES-3044
MB633021	HY-SB-9782
MB864164	MI-ES-3044
MB871748	MI-SB-9936
MB892982	MI-LS-2768

...HYUNDAI	MOOG
MB910887	MI-SB-9936
MB910889	MI-SB-9936
MB910890	MI-SB-9936
MR112709	HY-SB-14674
MR296274	MI-ES-2245
MR338620	MI-SB-9936
MR455185	MI-SB-9936

ISUZU	MOOG
310828	OP-BJ-0177
4302209	OP-BJ-1504
4881079000	SZ-ES-2562
4882079000	SZ-ES-2563
8942172213	IS-AX-5688
8942245522	IS-BJ-10055
8942464751	IS-BJ-10055
8943744240	OP-BJ-2040
8944194080	OP-ES-1501
8944194081	OP-ES-1501
8944194090	OP-ES-1502
8944194091	OP-ES-1502
8944521020	OP-BJ-1504
8944521021	OP-BJ-1504
8944594532	OP-BJ-0177
8944594533	OP-BJ-0177
8944594534	OP-BJ-0177
8944594643	OP-BJ-1504
8944594651	OP-BJ-1504
8944594652	OP-BJ-1504
8944594800	OP-ES-1501
8944594801	OP-ES-1501
8944594801	OP-ES-1502
8944594802	OP-ES-1501
8944594810	OP-ES-1502
8944594811	OP-ES-1501
8944594811	OP-ES-1502
8944594812	OP-ES-1502
8970182272	OP-LS-1786
8970182282	OP-LS-2811
8970209531	OP-ES-1501
8970209531	OP-ES-1502
8970209540	OP-ES-1501
8970209540	OP-ES-1502
8970209541	OP-ES-1501
8970209541	OP-ES-1502
8970209542	OP-ES-1501
8970209542	OP-ES-1502
8979406160	OP-ES-1501
897956902A	OP-ES-1501
8980058260	OP-BJ-2040
94217221	IS-AX-5688
94224552	IS-BJ-10055
94246475	IS-BJ-10055
94419408	OP-ES-1501
94419409	OP-ES-1502

IVECO	MOOG
1903652	FI-ES-4070

...IVECO	MOOG
500310933	FI-ES-4071
8581022	FI-SB-13285
93800662	FI-ES-4070
93801624	FI-SB-13284
93802209	FI-ES-4071
93802242	FI-BJ-4072
93802248	FI-SB-13283
93804059	FI-ES-4070
93804060	FI-ES-4071
93807320	FI-BJ-4072
93807545	FI-BJ-4072
93807641	FI-SB-13286
9983325	FI-AX-1558

JAGUAR	MOOG
1116579	FD-WP-0715
1117698	FD-LS-0808
1117800	FD-LS-0469
1117859	FD-LS-5446
1118920	FD-LS-5444
1118921	FD-LS-5446
1124418	FD-SB-7973
1127646	FD-LS-0808
1127648	FD-LS-0469
1139928	FD-WP-0715
1149803	FD-WP-0715
1203923 (-)	FD-BJ-0474
1203924 (-)	FD-BJ-0474
1206474	FD-LS-5445
1404976	FD-SB-3480
1404977	FD-SB-3501
1S713395AE	FD-BJ-0474
1S714A037DC	FD-SB-7973
1S715C486AC	FD-LS-0469
1S715C486AD	FD-LS-0469
1S715K652AC	FD-LS-5444
1S715K743AB	FD-LS-5446
1S715K743AC	FD-LS-5446
1S715K898AF	FD-LS-5445
1S715K898AG	FD-LS-5445
1X433200AF	JA-AX-4433
1X433200BF	JA-AX-4433
2X433200AE	JA-AX-4433
2X433200BE	JA-AX-4433
5X433B438AA	FD-LS-0808
C12803	JA-BJ-0561
C15890	RO-BJ-2022
C23024	RO-BJ-2022
C2S10234	JA-SB-13289
C2S12013	FD-ES-0841
C2S19669	JA-TC-10682
C2S20741	JA-TC-10682
C2S24698	JA-LS-4044
C2S25024	JA-TC-10682
C2S26883	FD-LS-0808
C2S26883	FD-LS-3286

...JAGUAR	MOOG
C2S3248	FD-LS-0808
C2S3602	JA-TC-10682
C2S36208	JA-TC-10682
C2S39484	FD-TC-13360
C2S39552	FD-LS-0808
C2S39552	FD-LS-3286
C2S39585	JA-TC-10682
C2S39661	FD-SB-0492
C2S39661	FD-SB-0497
C2S39661	FD-WP-0716
C2S39661S1	FD-SB-0497
C2S39661S2	FD-SB-0492
C2S39662	FD-WP-0715
C2S40709	JA-LS-4044
C2S4585	JA-LS-4044
C2S46370	JA-TC-10682
C2S47357	FD-ES-0841
C2S50863	JA-TC-10682
C2S51258	JA-SB-13290
C2S51264	JA-SB-13289
CAC9937	JA-BJ-0561
CAC9938	RO-BJ-2022
GSJ412	RO-BJ-2022
JLM1098	JA-ES-0585
JLM11860	JA-BJ-0561
JLM409	JA-AX-10755
JLM9660	JA-ES-0585
XR819697	JA-SB-8110

JEEP	MOOG
52089981AD *	CH-SB-13393
105143555AC	CH-ES-8353
105143556AC	CH-ES-8354
25715934	AMGK8989
5012432AA	AMGK3185
5012432AA	AMGK7429
5069161AB	AMGK3199
5072444AA	AMGES3536
5072445AA	AMGES3535
5114037AB	AMGK3199
5135651AB	CH-BJ-10520
5135651AC	CH-BJ-10520
5135651AD	CH-BJ-10520
5135651AE	CH-BJ-10520
5168158AA (-)	CH-SB-14092
5168159AA (-)	CH-SB-14092
5183761AA	FI-ES-10933
5183761AB	FI-ES-10933
5183761AD	FI-ES-10933
51939753 (-)	FI-SB-15400
51939754 (-)	FI-SB-15403
51939949	FI-LS-14979
51959820 (-)	FI-SB-15400
51959820 (-)	FI-SB-15403
51961341 (-)	FI-SB-15400
51961341 (-)	FI-SB-15403

...JEEP	MOOG
52001090	AMGK3160
52001129	AMGK3168
52001132	AMGK3174
52001145	AMGK3160
52003143	AMGK3172
52003232	AMGK3171
52003636	AMGK3184
52003918	AMGK3147
52005738	DS1311
52005739	AMGES3096L
52005740	AMGES3095R
52005741	CH-ES-7921
52006289	AMGK3160
52006602	AMGDS1237
52007118	DS1235
52037849	AMGK3174
52037994	AMGDS1310
52038026	AMGK7418
52038975	AMGK7351
52087709	AMGK3166
52087887	AMGDS1430
52088167	AMGK3167
52088217AB	CH-TC-13351
52088217AD	CH-TC-13351
52088283	AMGK3201
52088319AB	CH-LS-13707
52088378	AMGK7352
52088432	DS1235
52088433	AMGK7420
52088437	AMGK3196
52088461	AMGES3474
52088511	AMGES3475
52088632AA	AMGCK3198
52088634AB	AMGK7390
52088649AC	AMGK7389
52088808AB	AMGK7450
52088870AB	AMGES3472
52088871AB	AMGDS1452S
52088879AA	AMGES3473
52089292AC	AMGEV80782
52089467AB	AMGK80861
52089486AC	CH-LS-10521
52089486AD	CH-LS-10521
52089486AE	CH-LS-10521
52089980AD (-)	CH-SB-13391
52089980AD (-)	CH-SB-13392
52089980AD *	CH-SB-13393
52089980AI	CH-TC-13390
52089981AD (-)	CH-SB-13391
52089981AD (-)	CH-SB-13392
52089981AI	CH-TC-13389
52090206AF	AMGK80604
52090206AF (-)	CH-SB-13395
52090206AG (-)	CH-SB-13395
52090206AH (-)	CH-SB-13395
52090206AI	CH-TC-13394

...JEEP	MOOG
52090206AI (-)	CH-SB-13395
52128517AA	AMGEV800407
52128520AA	AMGES3536
52128521AA	AMGES3535
52128532AA	CH-SB-9588
52128533AA	CH-SB-9590
68004085AA	AMGK3185
68004085AA	AMGK7429
68022614AA	CH-SB-14092
68141058AA	FI-ES-10933
77366698	FI-ES-15163
77366699	FI-ES-15164
83500202	AMGK3161T
83500202	AMGK7403
8983500202	AMGK3134T
J5365098	AMGK3170

KIA	MOOG
0G03034550B	MD-BJ-104144
0K01132270A	MD-DS-1816
0K01132290A	MD-DS-1717
0K01134160A	MD-LS-3895
0K01134200	KI-TC-10617
0K01134200A	KI-TC-10617
0K01134510B	MD-BJ-1618
0K01134777A	KI-SB-9792
0K20132240	MD-AX-1687
0K20132280	MD-ES-0786
0K20132280A	MD-DS-1772
0K20132280A	MD-ES-0786
0K20134550C	MD-BJ-10002
0K20134550C	MD-BJ-104147
0K20134550C	MD-BJ-1171
0K20134550D	MD-BJ-10002
0K20134550D	MD-BJ-104147
0K20134550D	MD-BJ-1171
0K20134550E	MD-BJ-10002
0K20134550E	MD-BJ-104147
0K20134550E	MD-BJ-1171
0K20332125	K150210
0K2A132240	MD-AX-1687
0K2A134150A	KI-LS-2670
0K2A134150A (-)	KI-SB-10150
0K2A134150B	KI-LS-2670
0K2A13446X	KI-SB-8922
0K2A13446Y	KI-SB-8921
0K2A134550A	MD-BJ-0747
0K2A534150	KI-LS-2384
0K2A534150A	KI-LS-2384
0K2A534150B	KI-LS-2384
0K2C034460	KI-SB-8914
0K2FA34150	KI-LS-8918
0K2FA34170	KI-LS-8917
0K2FA34550	MD-BJ-0747
0K2FK32240	KI-AX-10612
0K2M228150	KI-LS-2670

...KIA	MOOG
0K2N134150A	KI-LS-8342
0K2N134170A	KI-LS-8343
0K2NA28380	KI-SB-9824
0K2NA28380A	KI-SB-9824
0K2NA28390	KI-SB-9822
0K2NA28390A	KI-SB-9822
0K30B34300B	KI-TC-4418
0K30B34350B	KI-TC-4417
0K33C34150A	KI-LS-4423
0K33C34160A	KI-LS-4422
0K52232250	KI-AX-2671
0K52232270	KI-AX-2669
0K55232125	K150204
0K55232240	MD-ES-1815
0K55232250B	KI-AX-10602
0K55232280	MD-DS-1772
0K55232280	MD-ES-1815
0K55234160B	KI-LS-3899
0K55234300B	KI-WP-2675
0K55234300C	KI-WP-2675
0K55234350B	KI-WP-2672
0K55234350C	KI-WP-2672
0K55A28156	KI-SB-13352
0K60A32270A	KI-AX-4407
0K71032240	KI-ES-4411
0K71034510	FD-BJ-10066
0K71034540	KI-BJ-4721
0K7232270	KI-AX-4424
0K9A232240	MD-AX-1687
0K9A232280	MD-DS-1772
0K9A232280	MD-ES-0786
0K9A328170A	KI-LS-2673
0KX4334150	KI-LS-13943
0KX4334510	FD-BJ-10066
0S08534150	KI-LS-13943
4807102040	TO-SB-9702
4807102041	TO-SB-9702
4807112130	TO-SB-9702
4807112140	TO-SB-9702
4807202040	TO-SB-9700
4807202041	TO-SB-9700
4807212130	TO-SB-9700
4807212140	TO-SB-9700
5.77313E+15	KI-AX-4409
517600Q000	KI-BJ-7094
517601G000	HY-BJ-4749
517602E000	HY-BJ-3977
517602G000	KI-BJ-7094
517602H000	KI-BJ-7094
517602R000	KI-BJ-13409
5176038000	HY-BJ-2662
543803U000	HY-LS-14801
544103E000	KI-TC-8807
544103E001	KI-TC-8807
544103E002	KI-TC-8807
544103F600	HY-WP-10593

...KIA	MOOG
544103F601	HY-WP-10593
544103K000	HY-WP-10594
544203E000	KI-TC-8808
544203E001	KI-TC-8808
544203E002	KI-TC-8808
544203F600	HY-WP-10594
544203F601	HY-WP-10594
544203K000	HY-WP-10593
5450007100	KI-WP-5146
5450007200	KI-WP-5146
545000J000	HY-WP-7085
545001D000	KI-WP-8927
545001E000	HY-WP-7085
545001E100	HY-WP-7083
545001F000	KI-WP-8423
545001F100	KI-WP-8423
545001R000	HY-WP-13263
545002E010	KI-WP-8423
545002F000	KI-WP-8943
545002F001	KI-WP-8943
545002H000	KI-WP-7095
545002H100	KI-WP-7095
545002Y000	HY-WP-13301
545003K000	HY-WP-10589
545003K060	HY-WP-10589
545004H000 (-)	HY-SB-13785
545004H000 (-)	HY-SB-13786
54500FD000	KI-TC-8085
54500FD000 (-)	KI-SB-13277
5450107100	KI-WP-5147
5450107150	KI-WP-5147
5450107160	KI-WP-5147
5450107161	KI-WP-5147
5450107200	KI-WP-5147
5450107361	KI-WP-5147
545010J000	HY-WP-7086
545011D000	KI-WP-8928
545011E000	HY-WP-7086
545011E100	HY-WP-7084
545011F000	KI-WP-8424
545011F100	KI-WP-8424
545011R000	HY-WP-13264
545012E010	KI-WP-8424
545012F000	KI-WP-8944
545012F001	KI-WP-8944
545012H000	KI-WP-7096
545012H100	KI-WP-7096
545012Y000	HY-WP-13302
545013K000	HY-WP-10590
545013K060	HY-WP-10590
545014H000 (-)	HY-SB-13785
545014H000 (-)	HY-SB-13786
54501FD000	KI-TC-8084
54501FD000 (-)	KI-SB-13277
5450322A00	MI-BJ-10371
5450325A00	MI-BJ-10371

...KIA	MOOG
5450331600	MI-BJ-10371
545103E000	MD-WP-3963
545103E001	MD-WP-3963
545103E002	MD-WP-3963
5452031600	MI-BJ-10371
545203E000	MD-WP-3962
545203E001	MD-WP-3962
545203E002	MD-WP-3962
545224B000	HY-SB-14674
545224B010	HY-SB-14674
5453007000	KI-BJ-4757
545300X000	KI-BJ-4757
5453025000	MI-BJ-10371
5453025A00	MI-BJ-10371
545302F000	MI-BJ-10371
545302K000	KI-BJ-12659
5453031600	MI-BJ-10371
545303A200	HY-BJ-10600
545303S000	HY-BJ-10813
545304D000	KI-BJ-8938
545502P000	HY-SB-8067
5455107000	KI-SB-5148
5455107000	KI-SB-5149
545511E000	HY-SB-7088
545512B000	HY-SB-8067
545512E000	KI-SB-10584
545512H000	KI-SB-7097
545512S000	HY-SB-13299
545513X000	HY-SB-13367
545514D001	KI-SB-10523
545514H000	HY-SB-13785
5455522100	HY-SB-10559
5455522101	HY-SB-10559
5455522102	HY-SB-10559
5455622100	HY-SB-10560
5455622101	HY-SB-10560
5455622102	HY-SB-10560
545703E000	MD-BJ-3935
545703E001	MD-BJ-3935
545803E000	KI-SB-7447
545803E001	KI-SB-7447
545803E002	KI-SB-7447
5458407000	KI-SB-5148
5458407000	KI-SB-5149
545841G000	HY-SB-7087
545842B000	HY-SB-8070
545842E000	HY-SB-10725
545842H000	KI-SB-7098
545842S000	HY-SB-13300
545842T000	HY-SB-14721
5458438000	HY-SB-14669
5458438010	HY-SB-14669
5458438100	HY-SB-8957
545843J000	HY-SB-8070
545843S000	HY-SB-13300
545843X000	HY-SB-13705

...KIA	MOOG
545844D001	KI-SB-10522
545844H000	HY-SB-13786
545903E000	KI-SB-7448
546033E00	KI-SB-9801
546043E100	KI-SB-9801
546063E000	KI-SB-9801
546073E000	KI-SB-9801
546093E000	KI-SB-9801
5461025000	HY-SB-9778
5461029000	HY-SB-9772
546102B000	HY-SB-9816
546102D000	HY-SB-9772
5461034000	HY-SB-9782
5461034010	HY-SB-9782
5461037100	HY-SB-9788
546104D000	HY-SB-9816
546123J000	HY-SB-9816
546124D000	HY-SB-9816
546303F600	HY-SB-10075
546303K000	HY-SB-10075
546303L000	HY-SB-10075
546303L100	HY-SB-10075
546413K000	HY-SB-10075
548103E000	MD-LS-3942
548113E010	KI-LS-13255
548113E010	MD-LS-3981
548113E060	KI-LS-13256
548113E060	MD-LS-3982
548113E110	KI-LS-13255
548113E160	KI-LS-13256
5481207100	KI-SB-10607
548121C000	HY-SB-14672
548121C500	HY-SB-14672
548121G100	HY-SB-10562
548130Z000	KI-SB-13355
5481317100	HY-SB-12670
54813-1H100	HY-SB-14837
548131J000	HY-SB-12672
5481325000	HY-SB-12668
5481326000	HY-SB-12674
5481326100	HY-SB-12674
548132C100	HY-SB-14667
548132D001	HY-SB-14667
548132E100	KI-SB-10619
54813-2H000	HY-SB-8895
548132S000	HY-SB-15267
548133X000	HY-SB-13703
548133X001	HY-SB-13703
548134D000	KI-SB-10603
54820FD000	KI-LS-4694
5483007000	KI-LS-4883
548300U000	HY-LS-13297
548300X000	KI-LS-4883
548301E000	HY-LS-7081
548301E100	HY-LS-7081
548301F000	HY-LS-3941

...KIA	MOOG
548301G000	HY-LS-7081
548301G500	HY-LS-7081
548301J000	HY-LS-7937
548302B000	HY-LS-4942
548302B200	HY-LS-4942
548302F000	KI-LS-7129
548302G000	KI-LS-8923
548302H000	KI-LS-7090
548302H100	KI-LS-7090
548302H200	KI-LS-7090
548302K000	KI-LS-10613
548302S000	HY-LS-10809
548302S200	HY-LS-10809
5483038110	HY-LS-2652
5483038110	HY-LS-3937
548303U000	HY-LS-14801
548303W300	HY-LS-10809
548304D000	KI-LS-8933
548304L000	HY-LS-13297
54830C8000	HY-LS-14946
54830FD000	KI-LS-4695
5484007000	KI-LS-4884
548400X000	KI-LS-4884
548401E000	HY-LS-7082
548401E100	HY-LS-7082
548401G000	HY-LS-7082
548401G500	HY-LS-7082
548401J000	HY-LS-7936
548402B000	HY-LS-4943
548402B200	HY-LS-4943
548402F000	KI-LS-7130
548402K000	KI-LS-10614
548404D000	KI-LS-8934
551304D000	KI-BJ-8941
551601R000	HY-SB-13704
5522526500	HY-SB-15325
552300W000	HY-TC-14695
552302B000	HY-TC-14695
552302B100	HY-TC-14695
552302P000	HY-TC-14695
552303J000	HY-TC-14695
552400W000	HY-TC-14696
552402B000	HY-TC-14696
552402B100	HY-TC-14696
552402P000	HY-TC-14696
552403J000	HY-TC-14696
552501H000	HY-LS-8896
552502H000	HY-LS-8896
552532S000	HY-SB-14744
5531026000	HY-SB-9790
5531029000	HY-SB-9774
55311-1G000	HY-SB-10968
5531526000	HY-SB-9790
5532026000	HY-SB-9790
5532029000	HY-SB-9776
5532526500	HY-SB-9790

...KIA	MOOG
5534126000	HY-SB-9790
5551317000	HY-SB-12671
5551322500	HY-SB-10752
555132B200	HY-SB-10931
555132C110	HY-SB-14670
555132E000	KI-SB-13355
555132S100	HY-SB-14732
555133N100	HY-SB-13760
555133N200	HY-SB-13759
555133N300	HY-SB-15293
5553017000	KI-LS-7131
5553017010	KI-LS-7131
555301D000	KI-LS-8932
555301F000	HY-LS-3940
555301H000	KI-LS-7099
555301H100	KI-LS-7099
555302B000	HY-LS-4944
555302B200	HY-LS-4944
555302S100	HY-LS-10519
555302S200	HY-LS-10519
555303K001	HY-LS-10588
555303R000	HY-LS-13305
555304D000	KI-LS-8842
555304D000	KI-LS-8933
555403R000	HY-LS-13305
555803E000	KI-LS-10111
555803E050	KI-LS-10112
55823H1000	HY-LS-10597
5654007600	KI-AX-13248
565402H000	KI-AX-7089
565402K000	KI-AX-10615
56540C8000	HY-AX-14980
5682007000	KI-ES-4200
568200X000	HY-ES-8856
568200X010	HY-ES-8856
568200X900	HY-ES-8856
568201E000	HY-ES-4881
568201E900	HY-ES-4882
5682022000	HY-ES-0172
5682025000	HY-ES-0172
5682028500	HY-ES-0172
5682028520	HY-ES-0172
568202E000	HY-ES-3887
568202E900	HY-ES-3886
568202G000	KI-ES-8925
568202G900	KI-ES-8926
568202H000	HY-ES-7092
568202H090	HY-ES-7093
568202K000	KI-ES-8767
568202K050	KI-ES-8766
568202P000	HY-ES-4939
568202P900	HY-ES-4938
568202S000	HY-ES-10811
568202S050	HY-ES-10812
568202T100	HY-ES-10812
568202T190	HY-ES-10811

...KIA	MOOG
5682038000	HY-ES-2617
5682038900	HY-ES-2618
568203E000	MD-ES-3934
568203E900	MD-ES-3926
568203Q000	HY-ES-10811
568203Q500	HY-ES-10812
568203S000	HY-ES-10811
568203S050	HY-ES-10812
568204D000	KI-ES-8935
568204D001	KI-ES-8935
568204D100	KI-ES-8936
568204D101	KI-ES-8936
568204L000	HY-ES-13701
568204L090	HY-ES-13702
56820C8000	HY-ES-14981
56820C8900	HY-ES-14982
5772407000	KI-AX-4199
5772407000	KI-AX-5145
5772407100	KI-AX-4199
5772407100	KI-AX-5145
577241D010	KI-AX-10103
577241E000	HY-AX-7080
577242D000	HY-AX-2620
577242E000	HY-AX-3892
577242G000	KI-AX-10103
577242G010	KI-AX-10103
577242S000	HY-AX-10810
5772438010	HY-AX-1819
577243C010	HY-AX-1819
577244D000	KI-AX-8937
577244L000	HY-AX-13278
577244L090	HY-AX-15338
577313E010	KI-AX-4432
577323E010	KI-AX-4409
5777443010	K150210
8AB132280	MD-ES-2827
F32Z18198BA	FD-SB-9912
F32Z18A161AA	FD-SB-9912
GA2A34380	FD-SB-9912
GA2A3438XA	FD-SB-9912
GA5R34380	FD-SB-9912
K20128380A	KI-SB-9794
KB09232280	MD-ES-2827
KDX5032240	KI-AX-2330
KDX5032240A	KI-AX-2330
KDX5032240B	KI-AX-2330
KDX5332240	KI-AX-2331
KDX5332240B	KI-AX-2331
KGA2A34150A	KI-LS-2676
KGA2A34170A	KI-LS-2674
KGJ2134015A	K150210
KK15032125	K150068
KK15032125A	K150068
KK15032240	MD-AX-1716
KKY0134156A	MD-SB-6720
KKY0134310	MD-TC-0813

...KIA	MOOG
KKY0134390A	MD-TC-0813
KKY0134460	MD-SB-10608
L20634150A	KI-LS-2676
L20634170A	KI-LS-2674
LB8234380	KI-SB-9914
MB 109 684	MI-SB-5489
MB242358	MI-SB-9934
MB338620	MI-SB-9934
MB633021	HY-SB-9782
MB871748	MI-SB-9936
MB910887	MI-SB-9936
MB910889	MI-SB-9936
MB910890	MI-SB-9936
MDX5032280	KI-ES-4200
MR112709	HY-SB-14674
MR338620	MI-SB-9936
MR455185	MI-SB-9936
OK2A134380A	FD-SB-9912
S08399324	KI-ES-4411

LADA	MOOG
111803414058 (-)	LA-AX-13934
11182906050	LA-LS-10573
11183414056	LA-ES-8804
11183414057	LA-ES-8805
21012904185	LA-BJ-0392
21012904192	LA-BJ-0392
21013003011	LA-DS-0387
21013003050	LA-ES-0388
21013003057	FI-ES-0261
21013003064	LA-ES-0390
21013414116	LA-ES-0386
21082904185	LA-BJ-0063
2108290418501	LA-BJ-0063
21083401224	K150042
21083414056	LA-ES-0060
21083414057	LA-ES-0061
21083414060	LA-ES-0062
21102904192	LA-BJ-0063
21103401224	K150042
21103414054	LA-AX-10773
21103414056	LA-ES-0649
21103414057	LA-ES-0650
21103414058	LA-AX-12622
21103414059	LA-AX-10797
21213414011	LA-DS-0385
21213414116	LA-ES-0386
4183707	LA-DS-0387
4183728	LA-ES-0390
4183729	LA-ES-0388
4186630	LA-BJ-0392

LANCIA	MOOG
05960254	FI-SB-9666
07520850	FI-SB-8793
07775940	FI-SB-9678

...LANCIA	MOOG
09941625	FI-AX-1232
114509822	K150001
114509823	K150001
1304641080	CI-SB-7967
1305551080	PE-SB-1311
1305552080	PE-SB-1313
1305782080	CI-SB-7141
1306003080	PE-ES-5042
1308664080	PE-LS-1048
1313056080	PE-SB-8784
1313083080	FI-TC-8871
1313084080	FI-TC-8872
1316735080	FI-TC-8871
1316736080	FI-TC-8872
1317389080	FI-TC-8871
1317390080	FI-TC-8872
1317425080	PE-LS-1048
1322663080	FI-TC-8871
1322664080	FI-TC-8872
1331209080	CI-LS-2468
1333754080	FI-TC-8871
1333755080	FI-TC-8872
1346384080	CI-WP-2464
1346385080	CI-WP-2465
1351398080	PE-TC-8483
1351399080	PE-TC-8482
1356060080	PE-TC-8483
1356061080	PE-TC-8482
1363095080	PE-TC-8483
1363096080	PE-TC-8482
1369943080	CI-AX-7320
138162131A	K150001
1401239480	CI-TC-7299
1401239480	CI-TC-8418
1401239580	CI-TC-7298
1401239580	CI-TC-8419
1479759080	CI-SB-4473
1497407080	CI-TC-7299
1497408080	CI-TC-7298
1541354	FI-AX-5694
1541355	FI-AX-5694
1603456	OP-AX-4160
1603543	OP-AX-4160
1609456	OP-AX-4160
164102101900	AL-BJ-7521
193583600002	AL-ES-0034
352067	OP-BJ-4870
352087	OP-BJ-4870
352094	FI-TC-8871
352095	FI-WP-0109
352096	FI-WP-0111
3520C5	FI-TC-8871
3520C5 (-)	PE-SB-1311
3520N3	FI-WP-3840
3520X0 (-)	PE-SB-8484
352164	FI-TC-8872

...LANCIA	MOOG
352164 (-)	PE-SB-1313
352165	FI-WP-0108
352166	FI-WP-0110
352183	FI-TC-8872
352185	FI-TC-8872
3521C9	FI-TC-8872
3521H0	PE-SB-1312
3521H1	PE-SB-1312
3521J3	FI-WP-0118
3521T2 (-)	PE-SB-8484
352380	FI-SB-5435
352393	PE-SB-1138
36020064	K150071
36020065	K150071
36020066	K150071
36020108	K150067
364017	FI-BJ-4077
364032	FI-BJ-7530
364033	FI-BJ-7531
364054	FI-BJ-0513
364055	FI-BJ-0512
364067	FI-BJ-4958
3812F0	CI-AX-5169
400624	FI-AX-7528
4018H4	FI-ES-7529
406670	K150227
4097451	FI-BJ-0262
4104085	FI-ES-0248
4150178	FI-BJ-3116
4219839	FI-AX-3113
4239458	K150001
4239459	K150001
4241428	FI-TC-8872
4242581	FI-ES-0254
4254520	FI-ES-0252
4254523	FI-ES-0254
4256957	FI-ES-0254
4257019	FI-ES-0254
4264175	FI-ES-3121
4289458	K150001
4318655	FI-AX-3113
4322913	FI-AX-3105
4331968	FI-SB-3171
4332457	FI-TC-0253
4337760	FI-TC-0255
4343760	FI-ES-0260
4362467	FI-TC-0253
4364095	FI-TC-0253
4365569	FI-BJ-3116
4371155	K150001
4371156	K150001
4402277	FI-ES-3119
4402360	FI-TC-4063
4402649	FI-BJ-3118
4402672	FI-TC-4674
4408138	FI-TC-4673

...LANCIA	MOOG
4553505010	K150173
4640268	FI-WP-7525
46402681	FI-WP-7525
46402682	FI-WP-7524
46402683	FI-WP-7525
46402684	FI-WP-7524
46402825	AL-SB-10834
46402876	LN-WP-4405
46402877	LN-WP-4406
46407372	FI-WP-7502
46407373	FI-WP-7501
46409095	FI-WP-0948
46409096	FI-WP-0947
46413122	FI-LS-0048
46414183	FI-SB-9693
46414184	FI-SB-9694
46414734	LN-WP-4405
46414735	LN-WP-4406
46420429	FI-ES-2507
46420430	FI-ES-2508
46421522	FI-SB-2505
46423822	FI-WP-7504
46423823	FI-WP-7503
46429834	FI-TC-6564
46429834	FI-WP-7525
46429835	FI-TC-6565
46429835	FI-WP-7524
46430002	FI-TC-6564
46430002	FI-WP-7525
46430003	FI-TC-6565
46430003	FI-WP-7524
46437959	FI-BJ-0049
46452741	AL-SB-9692
46454595	FI-WP-2519
46454595 (-)	FI-SB-2520
46454595 (-)	FI-SB-2521
46454596	FI-WP-2509
46454596 (-)	FI-SB-2520
46454596 (-)	FI-SB-2521
46454597	FI-WP-0239
46454597 (-)	FI-SB-2522
46454597 (-)	FI-SB-2523
46454598	FI-WP-0240
46454598 (-)	FI-SB-2522
46454598 (-)	FI-SB-2523
46459719	FI-WP-0948
46459720	FI-WP-0947
46459723	FI-RK-3827
46462049	LN-LS-2678
46474556	AL-TC-8867
46474556	AL-WP-7527
46474557	AL-TC-8868
46474557	AL-WP-7526
46476755	FI-SB-4454
46519894	FI-WP-0948
46519898	FI-WP-0947

...LANCIA	MOOG
46522142	FI-WP-1462
46525407	FI-WP-1463
46543045	FI-BJ-0936
46545660	FI-WP-0461
46545660 (-)	FI-SB-2207
46545661	FI-WP-0462
46545661 (-)	FI-SB-2208
46545743	FI-LS-0048
46545749	LN-LS-13578
46555183	AL-SB-6628
46736463 (-)	LN-SB-6691
46741920	FI-SB-10509
46745364	FI-ES-0242
46745365	FI-ES-0241
46748578	FI-SB-2514
46748579	FI-SB-2515
46764746	FI-WP-1463
46764746 (-)	FI-SB-7758
46764746 (-)	FI-SB-7759
46764747	FI-WP-1462
46764747 (-)	FI-SB-7758
46764747 (-)	FI-SB-7759
46767262	FI-SB-14544
46767267	FI-LS-2111
46779293	FI-BJ-4174
4883079J00	FI-AX-10883
4883079J10	FI-AX-5156
50006262	FI-ES-0446
503178	CI-SB-10082
503179	CI-SB-10083
503529	CI-SB-9696
503529	CI-SB-9698
503538	CI-SB-9696
503538	CI-SB-9698
503816	CI-SB-9698
503817	CI-SB-9696
503818	CI-SB-9684
503819	CI-SB-9682
503841	CI-SB-9684
503842	CI-SB-9682
503868	CI-SB-10082
50509339S1	AL-SB-1720
50510134	FI-SB-13488
50513442	AL-WP-10780
50513442 (-)	AL-BJ-10774
50513442 (-)	AL-SB-10777
50513442 (-)	AL-SB-10778
50513444	AL-WP-10779
50513444 (-)	AL-BJ-10774
50513444 (-)	AL-SB-10777
50513444 (-)	AL-SB-10778
50515274	AL-LS-10443
50515275	AL-LS-10444
50515276	FI-LS-4548
50519427 (-)	AL-AX-10998
50520352	AL-ES-10781

...LANCIA	MOOG
50520353	AL-ES-10782
50521045	AL-WP-10780
50521046	AL-WP-10779
50521707	FI-SB-13488
50531823	FI-LS-4548
50700443	FI-SB-2510
50700464	FI-LS-2371
50700778	FI-SB-2511
50700779	FI-TC-8874
50700779	FI-WP-0938
50700797	FI-TC-8873
50700797	FI-WP-0939
50700941	FI-LS-2371
50701178	FI-SB-10506
50701813	LN-LS-13578
50703128	FI-TC-1964
50703128 (-)	FI-SB-3829
50703129	FI-TC-1963
50703129 (-)	FI-SB-3829
50703231	LN-TC-4835
50703231 (-)	LN-SB-4840
50703231 (-)	LN-SB-4864
50703232	LN-TC-4800
50703232 (-)	LN-SB-4840
50703232 (-)	LN-SB-4864
50703271	FI-SB-10511
50703296	FI-LS-3830
50704306	AL-TC-5099
50704306 (-)	AL-SB-5103
50704306 (-)	AL-SB-5106
50704307	AL-TC-5100
50704307 (-)	AL-SB-5103
50704307 (-)	AL-SB-5106
50704361	AL-LS-5094
50704362	AL-LS-5093
50704947	AL-TC-5097
50704947 (-)	AL-SB-5101
50704947 (-)	AL-SB-5102
50704948	AL-TC-5098
50704948 (-)	AL-SB-5101
50704948 (-)	AL-SB-5102
50705083	FI-TC-9057
50705083	FI-WP-5692
50705083 (-)	FI-SB-13373
50705084	FI-TC-9058
50705084	FI-WP-5693
50705084 (-)	FI-SB-13373
50705464	FI-WP-7420
50705464 (-)	FI-BJ-5414
50705465	FI-WP-7421
507054665 (-)	FI-BJ-5414
50705702	AL-LS-5095
50705944	FI-SB-13721
50706954	AL-SB-5104
50706955	AL-SB-5105
50706990	AL-LS-5094

...LANCIA	MOOG
50706991	AL-LS-5093
50708823	FI-TC-7412
50708823 (-)	FI-SB-5697
50708823 (-)	FI-SB-5698
50708824	FI-TC-7413
50708824 (-)	FI-SB-5697
50708824 (-)	FI-SB-5698
50709579	FI-TC-7412
50709580	FI-TC-7413
50710620	FI-TC-7413
50710621	FI-TC-7412
513172	CI-SB-7966
513173	CI-SB-7967
515261	CI-SB-4473
51701045	FI-LS-0048
51717001	FI-LS-8783
51727863	FI-WP-5202
51727863 (-)	FI-SB-5204
51727865	FI-WP-5201
51727865 (-)	FI-SB-5203
51749713 (-)	AL-SB-0503
51754198	AL-SB-6687
51783623	FI-SB-8790
51786814	FI-AX-5694
51786815	FI-AX-5694
51795269	FI-LS-2371
51795454	AL-LS-5094
51795455	AL-LS-5093
51795704	AL-LS-5096
51796664	FI-SB-10511
51801136	FI-LS-2371
51810124	FI-LS-10828
51810664	FI-WP-8476
51810664 (-)	FI-BJ-8357
51810664 (-)	FI-SB-8983
51810664 (-)	FI-SB-8984
51810665	FI-WP-8475
51810665 (-)	FI-BJ-8357
51810665 (-)	FI-SB-8983
51810665 (-)	FI-SB-8984
51817623	AL-TC-8105
51817624	AL-TC-8104
51827736	FI-WP-7420
51827736 (-)	FI-SB-13373
51827737	FI-WP-7421
51827737 (-)	FI-SB-13373
51832937	FI-WP-1463
51832938	FI-WP-1462
51834094	AL-TC-10670
51839218	LN-TC-4835
51839219	LN-TC-4800
51840600	FI-SB-8781
51848645	FI-LS-8086
51856870	FI-SB-13721
51856959	FI-LS-8794
51857021	FI-TC-7412

...LANCIA	MOOG
51857022	FI-TC-7413
51875886	FI-AX-5694
51875887	FI-AX-5694
51928527 (-)	FI-BJ-13610
51928536 (-)	FI-BJ-13610
51928536/527 (-)	FI-SB-13613
51928536/527 (-)	FI-SB-13614
542920	AL-BJ-3931
55700695	FI-SB-10510
55700751	FI-SB-5439
55700753	FI-LS-4548
55703232	FI-SB-5435
55703627	FI-WP-3958
55703629	FI-WP-3959
5892196	AL-SB-2391
5939683	FI-BJ-3118
5939683	FI-WP-4671
5939685	FI-BJ-3118
5939685	FI-WP-4672
5958244	FI-AX-3120
5958246	FI-ES-4079
5958247	FI-ES-4079
5960036	FI-ES-4082
5960037	FI-ES-4082
5960321	FI-AX-4080
5960835	FI-ES-4085
5962654	FI-ES-4084
5966980	LN-ES-3159
5983404	FI-ES-4079
5983406	FI-ES-4079
5995268	FI-ES-0261
5995503	FI-TC-4673
60501394	AL-SB-1288
60510361	AL-SB-1293
60510362	AL-WP-1621
60510363	AL-WP-1612
60511622	FI-AX-1856
60565705	FI-ES-4676
60565706	FI-ES-4675
60570365	AL-LS-1619
60570627	FI-LS-0441
60570731	AL-SB-9688
60570732	AL-SB-9686
60608980	AL-DS-7511
60608980	AL-ES-7513
60612317 (-)	FI-BJ-7517
60612435	AL-LS-0266
60612436	AL-LS-0263
60613575	AL-LS-7542
60614514	AL-LS-0043
60620565	AL-SB-0500
60620565	AL-SB-7338
60620566	AL-SB-0499
60620566	AL-SB-7339
60622623	AL-TC-7983
60622624	AL-TC-7984

...LANCIA	MOOG
60625029	AL-LS-0052
60627290	AL-SB-2398
60627290	AL-TC-8865
60627290	AL-WP-1437
60627291	AL-TC-8866
60627291	AL-WP-1436
60628255	AL-LS-3297
60628284	AL-LS-3296
60628294	AL-LS-7410
60628295	AL-LS-7411
60628303	AL-WP-2394
60628303 (-)	AL-SB-2402
60628307	AL-WP-2395
60628307 (-)	AL-SB-2402
60629903	AL-TC-3624
60629903 (-)	AL-SB-0527
60630757	AL-LS-1754
60642465	AL-TC-0056
60642465	AL-TC-8079
60651934	AL-TC-7984
60651935	AL-TC-7983
60652167	AL-TC-3623
60652465	AL-SB-0501
60652466	AL-SB-0502
60652466	AL-SB-7340
60652466	AL-TC-0057
60652466	AL-TC-8080
60657245	AL-TC-10669
606572456 (-)	AL-SB-1721
60657246	AL-TC-10670
60666020	AL-TC-10672
60666021	AL-SB-2399
60666021	AL-SB-6688
60666021	AL-TC-10671
60682636	AL-SB-10834
60686891 (-)	AL-SB-7341
60686892 (-)	AL-SB-7341
60695895	AL-SB-2396
60695895	AL-SB-2397
60695895S1	AL-SB-2396
60695895S3	AL-SB-2397
607060026	K150026
60710237	AL-DS-7512
60801528 (-)	FI-BJ-3157
60806398	AL-SB-9686
60806398	FI-SB-9693
60806408	AL-SB-1233
60808557	FI-SB-6627
60809242	FI-LS-0441
60809494	FI-ES-4676
60809612	AL-ES-0265
60809613	FI-ES-4676
60809752	FI-SB-9693
60809753	FI-SB-9694
60811372	FI-SB-9693
60811373	FI-SB-9694

...LANCIA	MOOG
60813377	FI-LS-0048
60815431	FI-WP-0947
60815432	FI-WP-0948
6407373	FI-WP-7501
68141058AA	FI-ES-10933
7076231	FI-AX-3853
7077206	FI-AX-4868
7079340	K150067
7079382	FI-AX-1751
7079388	FI-AX-2518
7081842	FI-AX-4197
7081851	FI-AX-4198
71737047	FI-TC-8871
71737048	FI-TC-8872
71742688	FI-LS-5159
71742731	FI-WP-5158
71742731 (-)	FI-SB-5161
71742732	FI-WP-5157
71742732 (-)	FI-SB-5161
71742733	FI-SB-5160
71742770	FI-ES-5155
71747915	FI-WP-7504
71747916	FI-WP-7503
7536271	FI-TC-1620
7543028	FI-ES-0444
7543760	FI-TC-4666
7544738	FI-SB-4465
7545270	LN-ES-3159
7545579	K150031
7545583	FI-ES-4676
7560331	FI-ES-4079
7583242	K150001
7583243	K150001
7591215	FI-ES-4676
7591216	FI-ES-4675
7592476	LN-SB-6684
7601057	FI-WP-7502
7601062	FI-WP-7501
7601064	FI-SB-1585
7601064	FI-SB-1586
7601064	FI-SB-1596
7601065	FI-SB-1587
7601068	FI-SB-1396
7601068	FI-SB-1579
7601261	FI-TC-4674
7601502	AL-SB-9686
7601502	FI-SB-9693
7601502	FI-SB-9694
7601642	AL-SB-1233
7601646	FI-SB-6627
7625714	AL-SB-2391
7633721	FI-AX-3120
7635775	FI-SB-9670
7636995	FI-TC-7523
7636996	FI-TC-7522
7658273	FI-AX-7508

...LANCIA	MOOG
7673581	FI-SB-1324
7673582	FI-SB-1323
7674701	FI-SB-4538
7678717	FI-ES-4676
7683363	FI-SB-9693
7683364	FI-SB-9694
7701491	FI-AX-0087
7719062	FI-RK-3591
77362279	CI-ES-2466
77362280	CI-AX-2467
77362380	LN-AX-4758
77362381	LN-ES-4771
77362502	FI-AX-5092
77362503	FI-ES-5091
77362506	FI-AX-3826
77362507	FI-ES-2516
77362508	FI-ES-2517
77363706	AL-ES-5417
77363707	AL-ES-5418
77363829	OP-ES-4921
77364009	CI-ES-5120
77364253	CI-ES-5119
77364750	AL-AX-5416
77364750	AL-RK-15075
7736514	FI-TC-2042
7736515	FI-TC-2045
77365223	FI-ES-8785
77365224	FI-ES-8786
77365591	AL-ES-10782
77365592	AL-ES-10781
77365815	FI-ES-12625
7747956	FI-SB-8782
7750977	FI-WP-7525
7750978	FI-WP-7524
7750982	FI-SB-6622
7750983	FI-SB-6623
77509870	FI-WP-7524
7750990	FI-SB-6626
7752285	FI-ES-4684
7755671	FI-SB-8801
7756218	FI-SB-8800
7757874	FI-SB-8787
7760424	FI-SB-6627
7760426	FI-SB-6763
7769900	FI-TC-2052
7769901	FI-TC-2053
7775343	FI-SB-1589
7775344	FI-SB-1590
7777239	FI-WP-7504
7777240	FI-WP-7503
7780443	AL-TC-8867
7780443	AL-WP-7527
7780444	AL-TC-8868
7780444	AL-WP-7526
7780450	FI-SB-6624
7820040638	K150173

...LANCIA	MOOG
82275011	FI-BJ-3116
82315790	FI-ES-0261
82346006	LN-BJ-3153
82351945	LN-ES-3154
82368166	K150001
82387676	FI-AX-1856
82387676	FI-ES-3156
82398170	FI-BJ-3157
82406867	FI-WP-4685
82406867 (-)	FI-BJ-3157
82406868	FI-WP-4686
82446499	FI-BJ-3157
82460439	FI-ES-3156
82461081	FI-WP-7504
82461082	FI-WP-7503
82463956	LN-BJ-4677
82480099	LN-BJ-0220
83375679	FI-ES-0261
9050452	AL-AX-1681
93189022	OP-AX-4160
93300662	FI-ES-4070
93501180	FI-WP-7502
93501180 (-)	AL-SB-3170
93501180 (-)	FI-SB-1396
93501181	FI-WP-7501
93501487	CI-WP-2464
93501488	CI-WP-2465
93511181 (-)	AL-SB-3170
93802209	FI-ES-4071
93802242	FI-BJ-4072
93807641	FI-SB-13286
9404059080	PE-ES-5042
9404059580	PE-ES-5042
9404066418	K150087
9566950880	CI-RK-15010
9566950880	PE-AX-5047
9750079980	FI-ES-4078
98845024	FI-AX-2504
98845026	FI-AX-3974
98845030	FI-ES-2512
98845878	FI-AX-10827
9915564	K150067
9938779	K150026
9938779R	K150026
9939574	K150001
9940260	FI-AX-1856
9941186	FI-AX-1856
9941293	K150077
9941625	FI-AX-1232
9943835	K150071
9944452	AL-AX-1681
9945562	FI-AX-0086
9945564	K150067
9945836	FI-AX-4080
9946815	LN-AX-3904
9946816	K150166

...LANCIA	MOOG
9946817	FI-ES-3156
9946817	LN-ES-1770
9946948	FI-AX-0087
9946949	FI-ES-4684
9947369	K150166
9947435	FI-ES-4675
9947436	FI-ES-4676
9947437	FI-ES-4675
9947438	FI-ES-4676
9947713	FI-AX-1461
9947714	FI-ES-2512
9947838	FI-ES-4676
9947919	AL-ES-0050
9947920	AL-ES-0051
9947926	FI-ES-3525
9948292	FI-AX-4431
9948296	LN-AX-2677
9948343	FI-AX-1839
9949217	FI-AX-2503
9949218	FI-ES-0937
9950672	FI-ES-4676
9983325	FI-AX-1558
HB16213101	K150001
HB16213200	K150001
SE127162449A	FI-AX-4080
SE141140104A	FI-BJ-13405
SE141140104A	FI-BJ-7510
SE141162449A	FI-AX-4080

LAND ROVER	MOOG
572337	RO-BJ-0361
572337	RO-BJ-1496
87LR12122	LR-SB-13388
ANR 3410	LR-SB-7135
ANR1799	RO-BJ-0361
ANR1799	RO-BJ-1496
ANR3304	LR-LS-3310
ANR3332	LR-SB-13764
ANR3824	LR-DS-12603
ANR3825	LR-DS-5054
ANR3826	LR-DS-5053
FTC3570	RO-BJ-0773
FTC3571	RO-BJ-0779
JQB100220	LR-ES-1923
JQB100230	LR-ES-1921
LR001118	LR-SB-12557
LR001134	LR-SB-9842
LR001182	LR-SB-12558
LR001184	LR-SB-12563
LR002609	FD-ES-5109
LR002610	FD-ES-5108
LR002624	LR-BJ-8089
LR002624	LR-WP-8344
LR002625	LR-BJ-8089
LR002625	LR-WP-8345
LR002626	LR-LS-8088

...LAND ROVER	MOOG
LR002876	LR-LS-8087
LR005649	LR-SB-12555
LR007205	LR-BJ-8089
LR007205	LR-WP-8344
LR007206	LR-BJ-8089
LR007206	LR-WP-8345
LR010671	LR-ES-5018
LR010672	LR-ES-13987
LR010672	LR-ES-5018
LR010676	LR-ES-12551
LR012724	LR-SB-12556
LR014132	LR-WP-15150
LR014133	LR-WP-15149
LR014145	LR-LS-4189
LR015096	LR-SB-9840
LR015336	LR-SB-12553
LR015339	LR-SB-12552
LR015344	LR-SB-13387
LR017011	LR-SB-7929
LR018343	LR-TC-5057
LR018344	LR-TC-5056
LR018345	LR-SB-13763
LR018346	LR-SB-13971
LR018347	LR-SB-13387
LR018354	LR-SB-13388
LR019406	LR-SB-9840
LR023715	LR-SB-7931
LR024472	LR-TC-14534
LR024472 (-)	LR-SB-14555
LR024473	LR-TC-14533
LR024473 (-)	LR-SB-14555
LR024474	LR-LS-13413
LR025159	LR-SB-8459
LR025986	LR-SB-7931
LR026267	LR-ES-13412
LR026271	LR-AX-13410
LR027570	LR-ES-13411
LR028245	LR-WP-12526
LR028247	LR-WP-13604
LR028248	LR-WP-7000
LR028249	LR-WP-12525
LR028251	LR-WP-13603
LR028252	LR-WP-6999
LR029303	LR-WP-13604
LR029304	LR-WP-7000
LR029305	LR-WP-13603
LR029306	LR-WP-6999
LR030047	LR-LS-4013
LR030048	LR-LS-10624
LR030048	LR-LS-4053
LR033242	LR-LS-14866
LR033243	LR-LS-14865
LR033529	LR-AX-13965
LR033534	LR-ES-14791
LR034211	LR-TC-14850
LR034211 (-)	LR-SB-14844

...LAND ROVER	MOOG
LR034212 (-)	LR-SB-14844
LR034213 (-)	LR-SB-14844
LR034214	LR-TC-14849
LR034214 (-)	LR-SB-14844
LR034215 (-)	LR-SB-14844
LR034216 (-)	LR-SB-14844
LR034217 (-)	LR-SB-14855
LR034218 (-)	LR-SB-14852
LR034218 (-)	LR-SB-14855
LR034219	LR-TC-14754
LR034220	LR-TC-14753
LR034220 (-)	LR-SB-14851
LR035489	LR-LS-14641
LR037690	LR-TC-14857
LR037690 (-)	LR-SB-14860
LR037700	LR-TC-14861
LR037700 (-)	LR-SB-14863
LR037702	LR-TC-14862
LR037702 (-)	LR-SB-14863
LR042975	LR-LS-14644
LR042976	LR-LS-14643
LR044841	LR-TC-14868
LR044841 (-)	LR-SB-14864
LR044844	LR-TC-14867
LR044844 (-)	LR-SB-14864
LR045242	LR-TC-14756
LR045242 (-)	LR-SB-14869
LR045243	LR-TC-14755
LR045243 (-)	LR-SB-14869
LR045802	LR-TC-14533
LR045802 (-)	LR-SB-14555
LR045803	LR-TC-14534
LR045803 (-)	LR-SB-14555
LR048092	LR-LS-14866
LR048093	LR-LS-14865
LR051586	LR-SB-8459
LR051614	LR-WP-15150
LR051615	LR-WP-15149
LR055291	LR-SB-7931
LR072468	LR-TC-14753
LR072468 (-)	LR-SB-14851
LR072469	LR-TC-14753
LR072469 (-)	LR-SB-14851
LR072470	LR-TC-14754
LR072471	LR-TC-14754
LR078476 (-)	LR-SB-14855
LR078478 (-)	LR-SB-14852
LR078478 (-)	LR-SB-14855
LR30048	LR-LS-4053
LR078657	LR-TC-14533
NRC1823	LR-ES-3134
NRC4745	RO-ES-1492
NRC7661	RO-BJ-0361
NRC9743	LR-DS-5015
NTC1886	RO-ES-1494
NTC1887	RO-ES-1492

...LAND ROVER MOOG

NTC1888	LR-LS-2681
NTC4260	RO-BJ-0361
NTC4260	RO-BJ-1496
NTC8533	RO-BJ-1496
NTC9932	RO-BJ-0361
NTC9932	RO-BJ-1496
QEK000040	LR-DL-10719
QFK100083	LR-DS-5048
QFK100085	LR-DS-5048
QFK100093	LR-DS-5032
QFK100095	LR-DS-5032
QFK500010	LR-AX-5021
QFK500020	LR-AX-5020
QFK500030	LR-AX-3661
QFS000010	RO-ES-0777
QFS000040	LR-ES-2684
QFS100060	RO-ES-0777
QFS100070	LR-ES-2684
QHG000040	LR-DS-5017
QHG000050	LR-DS-5016
QHG000060	LR-DS-12603
QHG000070	LR-DS-5054
QHG100000	LR-DS-5017
QHG100010	LR-DS-5016
QJB100220	LR-ES-1923
QJB100230	LR-ES-1921
QJB500010	LR-ES-5018
QJB500040	LR-ES-7043
QJB500050	LR-ES-3528
QJB500060	LR-AX-4212
QJB500070	LR-ES-12551
QJB500080	LR-ES-13987
QJB500080	LR-ES-5018
RBJ000062	LR-TC-5055
RBJ000120	LR-TC-5057
RBJ000130	LR-TC-5056
RBJ102440	LR-TC-1927
RBJ102450	LR-BJ-1928
RBJ102450	LR-TC-1924
RBJ102920	LR-TC-1927
RBJ102930	LR-TC-1924
RBJ500183	LR-WP-12526
RBJ500193	LR-WP-12525
RBJ500446	LR-WP-7000
RBJ500456	LR-WP-6999
RBJ500680	LR-TC-1927
RBJ500690	LR-TC-1924
RBJ500710	LR-TC-5055
RBJ500920	LR-TC-5055
RBJ501000	LR-WP-13604
RBJ501010	LR-WP-13603
RBJ501240	LR-WP-12526
RBJ501250	LR-WP-12525
RBJ501280	LR-WP-7000
RBJ501290	LR-WP-6999
RBJ501340	LR-WP-12526

...LAND ROVER MOOG

RBJ501350	LR-WP-12525
RBJ501380	LR-WP-7000
RBJ501390	LR-WP-6999
RBJ501400	LR-WP-13604
RBJ501410	LR-WP-13603
RBJ501500	LR-WP-7000
RBJ501510	LR-WP-6999
RBJ501540	LR-WP-12526
RBJ501550	LR-WP-12525
RBJ501580	LR-WP-13604
RBJ501590	LR-WP-13603
RBJ501600	LR-WP-7000
RBJ501610	LR-WP-6999
RBK000012	LR-BJ-4057
RBK500012	LR-BJ-7933
RBK500030	LR-BJ-4838
RBK500040	LR-BJ-4839
RBK500150	LR-BJ-4057
RBK500170	LR-BJ-7928
RBK500180	LR-BJ-4839
RBK500210	LR-BJ-4057
RBK500230	LR-BJ-4839
RBK500240	LR-BJ-4839
RBK500280	LR-BJ-4839
RBK500300	LR-BJ-4839
RBM000011	LR-LS-4013
RBM100170	LR-LS-1866
RBM100171	LR-LS-1866
RBM100172	LR-LS-1866
RBM100223	LR-LS-2682
RBM500110	LR-LS-4189
RBM500140	LR-LS-7042
RBM500150	LR-LS-7011
RBM500180	LR-LS-4189
RBM500190	LR-LS-4189
RBM500200	LR-LS-4013
RBX000010	LR-SB-12554
RBX000070	LR-SB-6578
RBX000200	LR-SB-13763
RBX000571	LR-SB-12552
RBX101160	LR-SB-5031
RBX101780	LR-SB-6577
RBX101790	LR-SB-5031
RBX500280	LR-SB-13387
RBX500291	LR-SB-8459
RBX500301	LR-SB-8460
RBX500311	LR-SB-8458
RBX500432	LR-SB-7930
RBX500443	LR-SB-7929
RBX500531	LR-SB-7931
RGD000060	LR-TC-5051
RGD000090	LR-TC-5049
RGD000110	LR-TC-5050
RGD000131	LR-LS-10624
RGD000131	LR-LS-4053
RGD000180	LR-LS-10624

...LAND ROVER MOOG

RGD000311	LR-LS-4045
RGD000312	LR-LS-4045
RGD100682	LR-LS-2683
RGD100700	LR-TC-5049
RGD500083	LR-ES-5019
RGD500100	LR-LS-10624
RGD500140	LR-LS-8913
RGD500150	LR-LS-10624
RGD500150	LR-LS-4053
RGD500180	LR-LS-10624
RGX000060	LR-SB-14951
RGX500070	LR-SB-13388
RGX500111	LR-SB-8461
RGX500131	LR-SB-8463
RGX500211	LR-SB-8464
RGX500300	LR-SB-8463
RHF000260	LR-SB-5059
RHF500031	LR-BJ-7932
RHF500100	LR-BJ-7932
RHF500110	RO-BJ-0361
RHF500110	RO-BJ-1496
RNJ501540	LR-WP-12526
RNR100080	LR-SB-9838
RPF000010	LR-SB-9840
RPF100080	LR-SB-9835
RPF100123	LR-SB-9835
RTC1800	RO-ES-1494
RTC5869	RO-ES-1494
RTC5870	RO-ES-1492
RVU000021	LR-SB-13967
RVU500010	LR-SB-14839
RVU500011	LR-SB-14839
STC1870	RO-ES-0778
STC1871	RO-ES-0777
STC1872	LR-ES-5052
STC1873	LR-DL-10719
TIQ000010	LR-DS-4213
TIQ000020	LR-DS-5053
TIQ000030	LR-ES-3528
TIQ000040	LR-AX-4212
TIQ100000	LR-DS-4213

LEXUS MOOG

4333029405	TO-BJ-3002
4333029615	TO-BJ-3002
4333039435	TO-BJ-1734
4333049185	TO-BJ-13525
4334029175	TO-BJ-3001
4334029215	TO-BJ-3001
4504629255	TO-ES-3306
4504639505	TO-ES-4996
4504649225	TO-ES-10900
4504749165	TO-ES-10899
4550329355	TO-AX-3321
4550339235	TO-AX-3983
4550339265	TO-AX-3983

...LEXUS MOOG

4550369025	TO-AX-4988
4553506010	K150177
4553506020	K150177
4553533020	K150177
4806842060	TO-WP-15320
4806847050	TO-WP-13662
4806942060	TO-WP-15319
4806947050	TO-WP-13661
4881033010	TO-LS-4709
4881060040	TO-LS-3984
4881505130	TO-SB-13851
4881505170	TO-SB-13851
4881512370	TO-SB-13851
4881575010	TO-SB-13851
4881575020	TO-SB-13852
4882002070	TO-LS-6580
4882028050	TO-LS-3000
4882033010	TO-LS-0376
4882033020	TO-LS-4710
4882042030	TO-LS-6580
4882060032	TO-LS-8966
4883006030	TO-LS-4157
4883012070	TO-LS-8428
4883033010	TO-LS-4157
4883048010	TO-LS-4157

MAZDA MOOG

0187-34-776	AMGK7275
0223-28-776	AMGK7275
0K01132270A	MD-DS-1816
0K01132290A	MD-DS-1717
0K01134160A	MD-LS-3895
0K01134510B	MD-BJ-1618
0K2A132240	MD-AX-1687
0K2A134550A	MD-BJ-0747
0K55232240	MD-ES-1815
0K55232280	MD-DS-1772
0K9A232240	MD-AX-1687
1010037	FD-SB-1350
1011857	FD-DS-4152
1011858	FD-DS-4151
1012814	K150144
10144014	FD-DS-4151
1015264	FD-WP-4149
1015264	FD-WP-4150
1016439	FD-SB-4060
1041979	FD-SB-4467
1061659 (-)	FD-SB-10674
1061668 (-)	FD-SB-10853
1063226	FD-SB-1351
1063248	FD-SB-1351
1063372	FD-SB-1351
1071690	FD-SB-1351
1071694	FD-WP-4150
1071702	FD-SB-1351
1072279	FD-WP-4149

...MAZDA	MOOG
1146130 (-)	FD-SB-2263
1146130 (-)	FD-SB-2264
1146131 (-)	FD-SB-2263
1146131 (-)	FD-SB-2264
1146160	FD-SB-8115
1149932 (-)	FD-SB-2263
1149932 (-)	FD-SB-2264
1149933 (-)	FD-SB-2263
1149933 (-)	FD-SB-2264
1329730 (-)	FD-SB-10674
1348231	FD-SB-10174
139199322	MD-ES-2281
1540724 (-)	FD-BJ-8090
1540725 (-)	FD-BJ-8090
1540725 (-)	FD-SB-8091
1540725 (-)	FD-SB-8092
1710796	FD-WP-4149
187-34-776	AMGK7275
1E0028012A	FD-SB-9617
1E0028460B	FD-SB-4467
1E0028460C	FD-SB-4467
1E0032125	K150085
1E0032240	FD-AX-4153
1E0032280A	FD-ES-4148
1E0034153A	FD-SB-1350
1E0034156	FD-SB-3161
1E0034170	FD-LS-0090
1E0034300A	FD-WP-4141
1E0034300B	FD-WP-4141
1E0034300D	FD-WP-4141
1E0034300E	FD-WP-4141
1E0034300F	FD-WP-4141
1E0034350A	FD-WP-4142
1E0034350B	FD-WP-4142
1E0034350C	FD-WP-4142
1E0034350D	FD-WP-4142
1E0034350E	FD-WP-4142
1E0034350F	FD-WP-4142
1E0034390	FD-SB-9605
1E0132125	K150144
1E0132125A	K150144
1E0132280A	FD-ES-4147
1E0134153A	FD-SB-1351
1E0134170	FD-LS-0090
1E0134170A	FD-LS-0090
1E0134300A	FD-WP-4150
1E0134300B	FD-WP-4150
1E0134300C	FD-WP-4150
1E0134300D	FD-WP-4150
1E0134300E	FD-WP-4150
1E0134350A	FD-WP-4149
1E0134350A	FD-WP-4150
1E0134350B	FD-WP-4149
1E0134350B	FD-WP-4150
1E0134350D	FD-WP-4149
1E0134350D	FD-WP-4150

...MAZDA	MOOG
1E0134350E	FD-WP-4149
1E0134350E	FD-WP-4150
1E0134350F	FD-WP-4149
1E0232125	K150144
1E0032280A	FD-ES-4148
1E0034300A	FD-WP-4141
1E0034350A	FD-WP-4142
1E0034550A	FD-BJ-4134
1E0035300A	FD-WP-4141
1E0035A350	FD-WP-4142
1E0132280A	FD-ES-4148
1E0134300A	FD-WP-4150
1E0134350A	FD-WP-4149
1E0135280A	FD-ES-4147
1E0135300A	FD-WP-4150
2046-49-720A	AMGK7275
2L2Z5K483BA	AMGK7275
3043575	K150144
30730829	VV-WP-4871
31201180	VV-WP-4872
31201181	VV-WP-4871
31262037	VV-WP-4872
31262039	VV-WP-4871
31277462	VV-WP-4872
31277463	VV-WP-4871
4553587704	K150074
51174 (-)	MD-BJ-4869
51175 (-)	MD-BJ-4869
52621634000	HO-SB-9760
52621SB2004	HO-SB-9760
52621SK3000	HO-SB-9760
52728SK3000	HO-SB-9760
52728SM1A02	HO-SB-9760
545103E001	MD-WP-3963
545203E001	MD-WP-3962
545703E000	MD-BJ-3935
547P32125	K150195
548103E000	MD-LS-3942
548113E010	MD-LS-3981
548113E060	MD-LS-3982
54P32125	K150195
568203E000	MD-ES-3934
568203E900	MD-ES-3926
6E5Z18183B	MD-SB-9884
6S4Z3A197A	FD-SB-10069
7138554	K150144
7371059	FD-SB-4467
8545-99-281	AMGK7275
8871-99-281	AMGK7275
89FB3B438A1E	FD-LS-0090
8A0134550	MD-ES-1655
8AB032280	MD-ES-3251
8AB132280	MD-ES-2827
8AB232280	MD-ES-3251
8AB234100A	MD-LS-0563
8AG134100	MD-LS-4300

...MAZDA	MOOG
8AG332280	MD-ES-0621
8AG432280	MD-ES-0621
8AH132280	MD-ES-2281
8AL132280	MD-ES-1665
8AN132280	MD-ES-1655
8AW1-34-700	AMGK7275
8AW3-34-700	AMGK7275
8E5Z18183A	MD-SB-9884
8S4Z18198A	FD-SB-10069
8V513042BD	FD-WP-7998
8V513051BD	FD-WP-7997
8V513B438AB	FD-LS-14891
8V513B438AB	FD-LS-8093
8V513B438BA	FD-LS-14891
8V513B438BB	FD-LS-14891
8V513C367AA	FD-ES-7387
8V513C437AA	FD-ES-7386
8V513L519AA	FD-AX-7388
94FB3K661AC	K150144
96FB3289AC	FD-AX-4153
96FB3289AC	FD-ES-4147
96FB3289AD	FD-AX-4153
96FB3289AD	FD-ES-4148
96FB3B438AB	FD-LS-0090
96FB3L519BA	FD-AX-4153
96FB5K653CA	FD-SB-4060
96FX3289AA	FD-ES-4148
96FX3290AA	FD-ES-4147
98AG5500AG (-)	FD-SB-10674
9992-11-000	AMGK7275
9992-21-000	AMGK7275
9YA00-1002	AMGK7275
B00134460	MD-SB-0581
B00134550	MD-BJ-10002
B00134550	MD-BJ-104147
B01A34350	MD-WP-0974
B01A34550	MD-BJ-104185
B01A34550A	MD-BJ-104185
B01C34380	MD-SB-9844
B026R34170	MD-LS-1181
B02934159	MD-LS-0575
B03734460	MD-SB-0581
B09232240	MD-AX-1808
B09234550	MD-BJ-10002
B09332250	MD-AX-2825
B2103212X	K150213
B25D28380B	MD-SB-9872
B25D28390B	MD-SB-9858
B25D32240	MD-AX-2216
B25D32250	MD-AX-2218
B25D34300A	MD-WP-2325
B25D34300B	MD-WP-2325
B25D34300C	MD-WP-2325
B25D34300D	MD-WP-2325
B25D34350A	MD-WP-2324
B25D34350B	MD-WP-2324

...MAZDA	MOOG
B25D34350C	MD-WP-2324
B25D34350D	MD-WP-2324
B25D34460	MD-SB-4917
B25D34470	MD-SB-4859
B26R28170	MD-LS-2636
B26R34170	MD-LS-1181
B30032125	K150052
B30H28170B	MD-LS-3627
B32H34300	MD-WP-4427
B32H34300A	MD-WP-4427
B32H34300C	MD-WP-4427
B32H34300D	MD-WP-4427
B32H34350	MD-WP-4426
B32H34350A	MD-WP-4426
B32H34350B	MD-WP-4426
B32H34350C	MD-WP-4426
B32H34350D	MD-WP-4426
B32H34350E	MD-WP-4426
B37F28910B	FD-SB-10076
B37F28910C	FD-SB-10076
B37F34170	MD-LS-14985
B44534300	MD-WP-0453
B45528390C	MD-SB-9909
B45528390D	MD-SB-9909
B45528390E	MD-SB-9909
B4553224X	MD-AX-3072
B45532280	MD-ES-3251
B45534300B	MD-WP-0453
B45534350	MD-WP-0454
B45534350B	MD-WP-0454
B45534550	MD-BJ-104147
B45632125	K150178
B4563225X	MD-AX-3071
B45934470	MD-SB-0582
B45A34150	MD-LS-15086
B45A34170	MD-LS-15085
B59528390	MD-SB-9909
BBM228C10	FD-TC-0951
BBM23438X	VV-SB-9882
BC1D28170	MD-LS-0972
BC1D28170A	MD-LS-0972
BC1D28380B	MD-SB-9874
BC1D28390B	MD-SB-9870
BF6232240	MD-AX-1808
BF6732240	MD-AX-1808
BF673224X	MD-AX-1808
BJ2532125	K150194
BJ3D28380	MD-SB-9872
BJ3D28390	MD-SB-9858
BMM234380	VV-SB-9882
BO1A34310	MD-WP-0973
BO1A34350	MD-WP-0974
BP4K28156E	MD-SB-10661
BP4K28170C	FD-LS-3662
BP4K28170D	FD-LS-3662
BP4K28170E	FD-LS-3662

...MAZDA	MOOG
BP4K28170F	FD-LS-3662
BP4K28170G	FD-LS-3662
BP4K28500C	FD-TC-0952
BP4K28910D	FD-SB-10076
BP4K28C10B	FD-TC-0951
BP4K34170	MD-LS-14985
BP4K34170B	FD-LS-3667
BP4K34170C	FD-LS-3667
BP4K34170C	MD-LS-14985
BP4K34170D	FD-LS-3667
BP4K34170D	MD-LS-14985
BP4K34300A	MD-WP-4427
BP4K34300B	MD-WP-4427
BP4K34300E	MD-WP-4427
BP4K34350A	MD-WP-4426
BP4K34350B	MD-WP-4426
BP4K34350E	MD-WP-4426
BP4K34380B	VV-SB-9882
BP4K3438XA	VV-SB-9882
BP4L32240	MD-AX-3888
BP4L32280	MD-ES-4718
BP4L32290	MD-ES-4717
BR5S28910C	FD-SB-10076
BR5V28910C	FD-SB-10076
BTDA34550	MD-BJ-104185
C00234300A	MD-WP-0975
C00234350A	MD-WP-0976
C00234350B	MD-WP-0976
C23628500A	FD-TC-0952
C24328156B	MD-SB-14077
C24328156C	MD-SB-14077
C24328156D	MD-SB-14077
C51334300	MD-WP-4427
C51334350	MD-WP-4426
CC2934156	MD-SB-13356
CC2934156A	MD-SB-13356
CC2934156B	MD-SB-13356
CC2934156C	MD-SB-13356
CC3034300A	MD-WP-4427
CC3034300B	MD-WP-4427
CC3034300C	MD-WP-4427
CC3034300D	MD-WP-4427
CC3034300E	MD-WP-4427
CC3034350A	MD-WP-4426
CC3034350B	MD-WP-4426
CC3034350C	MD-WP-4426
CC3034350D	MD-WP-4426
CC3034350E	MD-WP-4426
CD9934300A	MD-WP-4427
CD9934350A	MD-WP-4426
D03134156	MD-SB-6720
D03134310A	MD-TC-0813
D03134320A	MD-TC-0813
D10232240	MD-AX-2692
D10232240A	MD-AX-2692
D10232250	MD-AX-2685

...MAZDA	MOOG
D10232250A	MD-AX-2685
D20134300E	MD-WP-2691
D20134350A	MD-WP-2690
D2103212X	K150213
D65128460	MD-SB-10651
D65132240	FD-AX-7388
D65132240	MD-AX-14929
D65132280	MD-ES-10686
D65132290	MD-ES-10685
D65134156	MD-SB-13838
D65134170	FD-LS-8093
D65134170A	FD-LS-8093
D65134300	FD-WP-7998
D65134300B	FD-WP-7998
D65134300C	FD-WP-7998
D65134300D	FD-WP-7998
D65134350	FD-WP-7997
D65134350C	FD-WP-7997
D65134350D	FD-WP-7997
D65134350E	FD-WP-7997
D65332240	MD-AX-14929
D65332280	MD-ES-10686
D65332290	MD-ES-10685
DC3532125	K150164
DD3232280	FD-ES-2262
DD3232290	FD-ES-2261
DD3234156	FD-SB-6811
DD3234170	FD-LS-2259
DD3234300	FD-WP-0738
DD3234350	FD-WP-0739
DE9032240	FD-AX-2258
DE9032240	FD-RK-15057
DE9032280	FD-ES-2262
DE9032290	FD-ES-2261
DG8028460	MD-SB-10651
E03032240A	MD-AX-2280
E8BZ3B455A	MD-SB-9844
EA0128170	MD-LS-5578
EA0128170C	MD-LS-5578
EA0128170D	MD-LS-5578
EA0128390	MD-SB-9909
EA0334170	MD-LS-2689
EA0334170A	MD-LS-2689
EG2132240	MD-AX-10524
EG2132280A	MD-ES-10528
EG2132280B	MD-ES-10528
EG2132290A	MD-ES-10527
EG2132290B	MD-ES-10527
EG2134300D	MD-TC-15236
EG2134350D	MD-TC-15235
EG2134350D (-)	MD-BJ-13931
EH4434300	MD-TC-15236
EH4434350	MD-TC-15235
EH4434350 (-)	MD-BJ-13931
F02Z3A130A	MD-ES-0621
F15134150	MD-LS-1127

...MAZDA	MOOG
F15134170	KI-LS-2674
F15134170	MD-LS-1117
F1CZ18197A	MD-SB-9909
F1CZ3280A	MD-AX-3072
F32Z18192A	FD-SB-9662
F32Z18192B	FD-SB-9660
F32Z18192C	FD-SB-9662
F32Z18192D	FD-SB-9660
F32Z18198BA	FD-SB-9912
F32Z18A161AA	FD-SB-9912
F4BZ18A179B	FD-SB-9642
F57A3069CB	AMGK8705
F57A3A188AA	AMGK8704
F57Z3050BB	AMGK8695T
F5TZ3082A	AMGK8710T
FA019-92-81A	AMGK7275
FA24-99-281	AMGK7275
FB0132240A	FD-AX-2483
FOCZ18197A	MD-SB-9909
G03032240	MD-AX-2280
G03032240A	MD-AX-2280
G03099356	MD-BJ-104144
G26A32280	MD-ES-2362
G26A32290	MD-ES-2361
G46C34300	MD-WP-13902
G46C34350	MD-WP-13901
GA2A28380A	FD-SB-9662
GA2A28390A	FD-SB-9660
GA2A32125	K150169
GA2A32280A	MD-ES-0621
GA2A34150	MD-LS-1127
GA2A34150A	KI-LS-2676
GA2A34150A	MD-LS-1127
GA2A34170	MD-LS-1117
GA2A34170A	KI-LS-2674
GA2A34170A	MD-LS-1117
GA2A34300	FD-WP-0558
GA2A34350	FD-WP-0557
GA2A34380	FD-SB-9912
GA2A3438XA	FD-SB-9912
GA2A34470	MD-SB-4846
GA2B28170	MD-LS-2017
GA2B28170A	MD-LS-2017
GA2B28170B	MD-LS-2017
GA2B34300A	FD-WP-0558
GA2B34470	MD-SB-4846
GA2B34470A	MD-SB-4846
GA2C28170A	MD-LS-2017
GA2C28170B	MD-LS-2017
GA5R34380	FD-SB-9912
GA6A34300B	MD-WP-2360
GA6A99356	MD-BJ-104144
GA6B34300A	FD-WP-0558
GA6B34300B	FD-WP-0558
GA6B34300C	FD-WP-0558
GA6B34300D	FD-WP-0558

...MAZDA	MOOG
GA6B34300E	FD-WP-0558
GA6B34350A	FD-WP-0557
GA6B34350B	FD-WP-0557
GA6B34350C	FD-WP-0557
GA6B34350E	FD-WP-0557
GA6B99356	MD-BJ-104144
GA6B99356A	MD-BJ-104144
GA6BE34300	FD-WP-0558
GA6BE34350	FD-WP-0558
GD7A28380	FD-SB-9662
GD7A28390	FD-SB-9660
GD7A34380	MD-SB-9878
GD7A3438X	MD-SB-9878
GE4T28170	MD-LS-3315
GE4T28170B	MD-LS-3315
GE4T3212X	K150169
GE4T32240	MD-AX-2348
GE4T32240A	MD-AX-2348
GE4T34300B	MD-WP-0975
GE4T34300C	MD-WP-0975
GE4T34300D	MD-WP-0975
GE4T34300E	MD-WP-0975
GE4T34350B	MD-WP-0976
GE4T34350C	MD-WP-0976
GE4T34350D	MD-WP-0976
GE4T34350E	MD-WP-0976
GE4T3446XD	MD-SB-10664
GE4T3446YD	MD-SB-10663
GF2234350A	MD-WP-1666
GG2A34380	MD-SB-9878
GG2E28380	MD-SB-9881
GG2E28390	MD-SB-9880
GHP934300A	MD-WP-13902
GHP934300B	MD-WP-13902
GHP934300C	MD-WP-13902
GHP934350A	MD-WP-13901
GHP934350B	MD-WP-13901
GHP934350C	MD-WP-13901
GHT232240	MD-AX-15089
GHT232240A	MD-AX-15089
GHT232280	MD-ES-15088
GHT232290	MD-ES-15087
GJ2132240	MD-AX-2962
GJ213224X	MD-AX-2962
GJ2232125	K150169
GJ2232126	K150169
GJ2232240	MD-AX-2962
GJ2234350A	MD-WP-1666
GJ2234350B	MD-WP-1666
GJ2532125	K150194
GJ2532125A	K150194
GJ6A28156	MD-SB-10687
GJ6A28170A	MD-LS-4395
GJ6A28170B	MD-LS-4395
GJ6A3212X	K150197
GJ6A34150A	MD-LS-4396

...MAZDA

	MOOG
GJ6A34156	MD-SB-10662
GJ6A34170A	MD-LS-4026
GJ6A34200B	MD-WP-2359
GJ6A34250B	MD-WP-2358
GJ6A34300B	MD-WP-2360
GJ6A34300C	MD-WP-2360
GJ6A34300D	MD-WP-2360
GJ6A34300E	MD-WP-2360
GJ6A34380C	MD-SB-9856
GJ6A34460A	MD-SB-2365
GJ6A34460B	MD-SB-2365
GJ6A34470A	MD-SB-2364
GJ6A34470B	MD-SB-2364
GJ6A34540	MD-BJ-2291
GJ6A34710A	MD-SB-2363
GJ6A34J00B	MD-WP-2357
GJ6A34J00C	MD-WP-2357
GJ6A34J00D	MD-WP-2357
GJ6A34J50B	MD-WP-2356
GJ6A34J50C	MD-WP-2356
GJ6A34J50D	MD-WP-2356
GJ6E32240	MD-AX-0010
GJ6E3224X	MD-AX-0010
GJ6E32280	MD-ES-2362
GJ6E32280A	MD-ES-2362
GJ6E32290	MD-ES-2361
GJ6E32290A	MD-ES-2361
GJ6E3438YB	MD-SB-9884
GJ8334350A	MD-WP-1666
GJ8334350B	MD-WP-1666
GJR932290	MD-ES-15087
GJR932290	MD-ES-15088
GK2A34150A	MD-LS-4396
GK2A34170	MD-LS-4026
GK2A34380A	MD-SB-9856
GK2A34380B	MD-SB-9856
GM6A3438Y	MD-SB-9884
GM6A3438YA	MD-SB-9884
GN9834350A	MD-WP-1666
GP9A34200A	MD-WP-2359
GP9A34200B	MD-WP-2359
GP9A34250A	MD-WP-2358
GP9A34250B	MD-WP-2358
GR1A34J00	MD-WP-2357
GR1A34J50	MD-WP-2356
GS1D28170	MD-LS-9006
GS1D32240	MD-AX-8887
GS1D32280	MD-ES-10526
GS1D32290	MD-ES-10525
GS1D34150	MD-LS-9090
GS1D34170	MD-LS-9089
GS1D34200A	MD-WP-12580
GS1D34200A (-)	MD-SB-12578
GS1D34250A	MD-WP-12579
GS1D34250A (-)	MD-SB-12578
GS1D34250C	MD-WP-12579

...MAZDA

	MOOG
GS1D34300G	MD-WP-12574
GS1D34300H	MD-WP-12574
GS1D34300J	MD-WP-12574
GS1D34300K	MD-WP-12574
GS1D34300L	MD-WP-12574
GS1D34300L (-)	MD-SB-12575
GS1D34350G	MD-WP-12573
GS1D34350H	MD-WP-12573
GS1D34350J	MD-WP-12573
GS1D34350L	MD-WP-12573
GS1D34350L (-)	MD-SB-12575
GS1D34470	MD-SB-12575
GV2W34200	MD-WP-2359
GV2W34250	MD-WP-2358
H00199324	MD-ES-2281
H00232125	K150052
H33032125	K150056
HG3032125	K150056
KD3128156B	MD-SB-14656
KD3128170	MD-LS-14572
KD3128190	MD-LS-13897
KD3132240	MD-AX-13906
KD3132240A	MD-AX-13906
KD3132280	MD-ES-13871
KD3528156B	MD-SB-14659
KD3528430A	MD-SB-14655
KD3528450	MD-SB-14652
KD3528480	MD-SB-14653
KD3528500	MD-TC-13898
KD3528602	MD-SB-14654
KD3534170	MD-LS-13870
KD3534300D (-)	MD-BJ-13905
KD3534300D (-)	MD-SB-13903
KD3534300D (-)	MD-SB-13904
KD3534350D	MD-WP-13901
KD3534350D (-)	MD-BJ-13905
KD3534350D (-)	MD-SB-13903
KD3534350D (-)	MD-SB-13904
KD3534350E	MD-WP-13901
KD3534350F	MD-WP-13901
KD3534350G	MD-WP-13901
KD3534470C	MD-SB-13900
KD5334300D	MD-WP-13902
KD5334300E	MD-WP-13902
KD5334300F	MD-WP-13902
KD5334300G	MD-WP-13902
KD61-34-156B	MD-SB-14651
KD61-34-156C	MD-SB-14651
KD61-34-156E	MD-SB-14651
KD61-34-156F	MD-SB-14651
KGA2A34150A	KI-LS-2676
KGA2A34170A	KI-LS-2674
KK15032125	K150068
KK15032240	MD-AX-1716
KKY0134310	MD-TC-0813
KKY0134390A	MD-TC-0813

...MAZDA

	MOOG
KKY0134460	MD-SB-10608
L20634150A	KI-LS-2676
L20634150A	MD-LS-1127
L20634170A	KI-LS-2674
LA0132115	MD-AX-3973
LB823212X	K150196
LB8234300	MD-TC-4866
LC6232125	K150269
LC6232125A	K150269
LC6232240B	MD-AX-2710
LC6232246	MD-AX-2710
LC6232280	MD-BJ-2711
LC6234170	MD-LS-3881
LC6234170A	MD-LS-3881
LC6234170B	MD-LS-3881
LC6234550	MD-BJ-2327
LC7032125	K150269
LC7032125A	K150269
LC7034170	MD-LS-7400
M00199356A	MD-BJ-104144
MD10728775	FD-SB-9642
MD10728776	FD-SB-9642
MDES2361	MD-ES-2361
MDES2362	MD-ES-2362
NA0132240	MD-AX-2702
NA0134170	MD-LS-3946
NA0134550	MD-BJ-2703
NA0134550A	MD-BJ-2703
NA0134550B	MD-BJ-2703
NC1028340C	FD-SB-9642
NC1028775	FD-SB-9642
NC1028776	FD-SB-9642
NC1032125	K150178
NC1032240	MD-AX-2701
NC1032240A	MD-AX-2701
NC1032250	MD-AX-2700
NC1032250A	MD-AX-2700
NC1034150	MD-LS-2694
NC1034170	MD-LS-2693
OK20132280A	MD-ES-0786
OK20134550C	MD-BJ-1171
OK2A134380A	FD-SB-9912
OK55232240	MD-ES-1815
OK55232280	MD-DS-1772
OK9A232280	MD-ES-0786
S08332115	FD-AX-2483
S08332125	K150195
S08399324	KI-ES-4411
S08399324A	KI-ES-4411
S08399354	FD-BJ-10065
S08399356	FD-BJ-10066
S08399364	FD-BJ-10065
S47P32125	K150197
S47P34540	FD-BJ-10065
S47P34540A	FD-BJ-10065
SA3932115	FD-AX-2483

...MAZDA

	MOOG
S08332115	FD-AX-2483
S08399356	FD-BJ-10066
S08399364	FD-BJ-10065
T00128170A	MD-LS-4434
T00128170B	MD-LS-4434
T0012817X	MD-LS-4434
T00132280	MD-ES-2705
T00132290	MD-ES-2704
T00134170A	MD-LS-4436
T0013417XA	MD-LS-4435
TA0432F0Y	K150074
UB3934154	AMGK7275
UB39-34-157	AMGK7275
UH7132280	MD-ES-4720
UH71-34-152	AMGK7275
UH7134540	MD-BJ-10688
UH72-34-157	AMGK7275
UH7432250	MD-ES-2712
UH7432280	MD-ES-2713
UH7434550	MD-BJ-5168
W023-99-341	AMGK7275
W723-99-341	AMGK7275
XM343263AA	MD-BJ-10688
ZZP134550	AMGK8695T

MERCEDES-BENZ

	MOOG
0003200028	ME-BJ-6287
0003200128	ME-BJ-6287
0003210250	ME-SB-10165
0003210450	ME-SB-10165
0003301007	ME-BJ-8111
0003305035	ME-ES-0643
0003307435	ME-ES-6330
0003380810	ME-ES-0213
0003382010	ME-ES-0213
0003384210	ME-ES-3095
0003384310	ME-ES-3096
0003384410	ME-ES-3095
0003384510	ME-ES-3096
0003384910	ME-ES-3098
0003385110	ME-ES-6129
0003385310	ME-ES-0213
0003385510	ME-ES-0212
0004600005	ME-DS-6060
0004602148	ME-ES-0643
0004604248	ME-ES-2041
0004606548	ME-ES-1760
0004607348	ME-ES-1650
0013304035	ME-ES-1703
0013304135	ME-ES-1703
0013305435	ME-ES-6334
0013305535	ME-ES-6335
0013306235	ME-ES-2744
0013306335	ME-ES-2745
0013307435	ME-ES-6330
0013307735	ME-ES-6330

...MERCEDES-BENZ	MOOG
1073300103	ME-DS-0216
1073300108	ME-DS-0216
1073300203	ME-DS-6314
1073300275	ME-SB-4517
1074600205	ME-DL-6059
1074600505	ME-DL-6059
1074600605	ME-DL-6059
1103300003	ME-DS-0216
1144600205	ME-DS-6060
1144600305	ME-DS-6060
1153201589	ME-LS-0221
1153201789	ME-LS-0221
1153300703	ME-DS-0216
1153300803	ME-DS-0216
1153301475	ME-SB-4517
1153330827	ME-BJ-0222
1153331027	ME-BJ-0223
1153331127	ME-BJ-0223
1153523065	ME-SB-1725
1153523665	ME-SB-1725
1154601505	ME-DS-6060
1154601605	ME-DS-6060
1163300203	ME-DS-6126
1163330927	ME-BJ-0234
1163334014	ME-SB-4536
1164600605	ME-DL-6061
1164600905	ME-DL-6061
1233200989	ME-LS-6346
1233300403	ME-DS-6128
1233300703	ME-DS-6128
1233301235	ME-BJ-0724
1233301335	ME-BJ-0724
1233301503	ME-DS-6128
1233301803	ME-DS-6128
1233304607	ME-TC-3077
1233304707	ME-TC-3078
1233305207	ME-TC-3077
1233305307	ME-TC-3078
1233380110	ME-ES-3082
1233380210	ME-ES-3083
1233520565	ME-SB-1725
1234600605	ME-DL-6061
1234600905	ME-DL-6061
1234601505	ME-DL-6061
1243200289	ME-DS-0803
1243200489	ME-LS-1654
1243231785	ME-SB-6742
1243232385	ME-SB-6658
1243232485	ME-SB-6657
1243232785	ME-SB-6825
1243233785	ME-SB-6742
1243234185	ME-SB-6657
1243234985	ME-SB-6658
1243235085	ME-SB-6825
1243235485	ME-SB-6826
1243235685	ME-SB-6657

...MERCEDES-BENZ	MOOG
1243260181	ME-SB-14913
1243300803	ME-DS-6308
1243300903	ME-DS-6308
1243301403	ME-DS-5491
1243301503	ME-DS-5492
1243301807	ME-WP-1712
1243301907	ME-WP-1713
1243303007	ME-WP-0735
1243303107	ME-WP-0736
1243303407	ME-WP-0839
1243303507	ME-WP-0840
1243303807	ME-WP-0733
1243303907	ME-WP-0734
1243330127	ME-BJ-6301
1243330327	ME-BJ-6301
1243333714	ME-SB-1355
1243334214	ME-SB-1749
1243334314	ME-SB-2323
1243500129	ME-TC-0731
1243500153	ME-DS-6300
1243500341	ME-SB-4541
1243506408	ME-SB-4541
1243507006	ME-TC-0732
1243507106	ME-TC-0732
1243507606	ME-TC-0732
1243507706	ME-TC-0732
1243510242	ME-SB-1631
1243511942	ME-SB-1121
1243523465	ME-SB-1209
1243523565	ME-SB-1294
1243524365	ME-SB-1645
1243527065	ME-SB-4476
1243527765	ME-SB-4472
1243528465	ME-SB-4476
1243529065	ME-SB-1209
1244600805	ME-DS-6306
1244601205	ME-DS-6317
1263300303	ME-DS-6126
1263300503	ME-DS-6126
1263300603	ME-DS-6126
1263300607	ME-TC-6068
1263300707	ME-TC-6069
1263300835	ME-RK-0727
1263301135	ME-RK-0727
1263333814	ME-SB-4437
1263520165	ME-SB-1725
1263520265	ME-SB-1725
1264600605	ME-DS-6066
1264600705	ME-DS-6067
1264600805	ME-DS-6066
1264600905	ME-DS-6067
1265860133	ME-RK-0727
1293300303	ME-DS-6333
1293500406	ME-TC-0732
1293500506	ME-TC-0732
1293512142	ME-SB-7965

...MERCEDES-BENZ	MOOG
1293520065	ME-SB-4476
1294600405	ME-DL-7950
13304035	ME-ES-1703
13304135	ME-ES-1703
13305435	ME-ES-6334
13305535	ME-ES-6335
13307435	ME-ES-6330
13307735	ME-ES-6330
1403200889	ME-LS-2714
1403201189	ME-DS-6318
1403201289	ME-DS-6319
1403201789	ME-LS-3907
1403203589	ME-LS-2714
1403230985	ME-SB-7209
1403231985	ME-SB-7986
1403300003	ME-DS-6320
1403300103	ME-DS-6320
1403304207	ME-WP-2741
1403304307	ME-WP-2742
1403305407	ME-TC-6336
1403305507	ME-TC-6337
1403305807	ME-TC-6336
1403305907	ME-TC-6337
1403306407	ME-WP-2741
1403306507	ME-WP-2742
1403307007	ME-WP-2741
1403307107	ME-WP-2742
1403307607	ME-TC-6336
1403307707	ME-TC-6337
1403330327	ME-BJ-6327
1403330515	ME-SB-2377
1403331814	ME-SB-2377
1403500870	ME-RK-7989
1403501070	ME-RK-7989
1403501170	ME-RK-7989
1403501853	ME-TC-2746
1403502453	ME-TC-2746
1403503053	ME-TC-2746
1403503153	ME-TC-2746
1403503406	ME-TC-4184
1403503453	ME-TC-2746
1403503506	ME-TC-8987
1403503606	ME-TC-8989
1403522965	ME-SB-4498
1403524465	ME-SB-8988
1403524965	ME-SB-10155
1403528065	ME-SB-4498
1403528665	ME-SB-4498
1404600805	ME-DS-6321
14141V00200000	ME-SB-4020
1633200011	ME-SB-15695
1633200032	ME-LS-7251
1633200044	ME-SB-13941
1633200090	ME-LS-7252
1633200144	ME-SB-13941
1633200190	ME-LS-7253

...MERCEDES-BENZ	MOOG
1633200373	ME-SB-13941
1633300003	ME-ES-0977
1633300003	ME-ES-0978
1633300035	ME-BJ-0980
1633300075	ME-SB-3997
1633300103	ME-ES-0978
1633300135	ME-BJ-0980
1633300175	ME-SB-3996
1633300203	ME-ES-0977
1633300403	ME-ES-0977
1633300407	ME-WP-2717
1633300507	ME-WP-2718
1633300807	ME-TC-2719
1633300907	ME-TC-2720
1633330001	ME-WP-2715
1633330101	ME-WP-2716
1633380015	ME-ES-0978
1633380115	ME-ES-0977
1633380215	ME-AX-0979
1633380215	ME-RK-15042
1633380315	ME-ES-0978
1633500013	ME-BJ-0981
1633500053	ME-TC-7763
1633500113	ME-BJ-0981
1633500153	ME-TC-7764
1633500353	ME-TC-7763
1633500453	ME-TC-7764
1633500553	ME-TC-7763
1633500653	ME-TC-7764
1633520001	ME-TC-3994
1633520101	ME-TC-3995
1633520401	ME-TC-3994
1633520501	ME-TC-3995
164 330 3407	ME-TC-8799
1643201232	ME-LS-4699
1643201332	ME-LS-4698
1643201332	ME-LS-5595
1643202132	ME-LS-4698
1643202132	ME-LS-5595
1643260681	ME-SB-14542
1643300935	ME-BJ-5597
1643301103	ME-ES-5593
1643301103	ME-ES-5599
1643301203	ME-ES-5594
1643301203	ME-ES-5600
1643301707	ME-TC-8799
1643301807	ME-TC-8798
1643302507	ME-TC-8799
1643302607	ME-TC-8798
1643302907	ME-TC-8799
1643303007	ME-TC-8798
1643303407 (-)	ME-SB-14833
1643303407 (-)	ME-SB-14834
1643303507	ME-TC-8798
1643303507 (-)	ME-SB-14833
1643303507 (-)	ME-SB-14834

...MERCEDES-BENZ	MOOG
1643330314	ME-SB-10153
1643330414	ME-SB-13542
1643500053	ME-TC-10647
1643501306	ME-TC-14537
1643501406	ME-TC-10643
1643501606	ME-TC-14538
1643520127	ME-BJ-5598
1643520165	ME-SB-10154
1643520327	ME-BJ-5598
1644600005	ME-AX-5596
1663200789	ME-LS-13975
1663200889	ME-LS-13976
1663260281	ME-SB-14542
1663300235	ME-BJ-13818
1663300403	ME-ES-13977
1663301707	ME-TC-13979
1663301807	ME-TC-13980
1663330000	ME-SB-13978
1663330714	ME-SB-13978
1663380315	ME-AX-13817
1663500053	ME-TC-10647
1663500306	ME-TC-14939
1683200373	ME-SB-9921
1683200389	ME-LS-0489
1683200389	ME-LS-4389
1683200589	ME-LS-0489
1683200589	ME-LS-4389
1683200789	ME-LS-0489
1683200789	ME-LS-4389
1683201089	ME-LS-0489
1683201089	ME-LS-4389
1683201189	ME-LS-0489
1683201189	ME-LS-4389
1683230385	ME-SB-10138
1683300807	ME-WP-1533
1683300907	ME-WP-1532
1683301107	ME-WP-1533
1683301135	ME-ES-1529
1683301207	ME-WP-1532
1683301235	ME-ES-1528
1683301335	ME-AX-1530
1683301335	ME-RK-15004
1683301335	ME-RK-15032
1683301535	ME-ES-1529
1683301635	ME-ES-1528
1683301707	ME-WP-1533
1683301807	ME-WP-1532
1683302307	ME-WP-1533
1683302407	ME-WP-1532
1683330014	ME-SB-1595
1683330127	ME-BJ-1531
1683330214	ME-SB-1594
1683330227	ME-BJ-1531
1683330614	ME-SB-1594
1683330714	ME-SB-1595
1683510142	ME-SB-12646

...MERCEDES-BENZ	MOOG
1683510242	ME-SB-12645
1683511142	ME-SB-12645
1684602300	K150149
1684602400	K150028
1684630196	K150149
1684630296	K150149
1689810518	ME-RK-3607
1693200589	ME-LS-2062
1693200989	ME-LS-2060
1693200989	ME-LS-8946
1693201389	ME-LS-2060
1693201389	ME-LS-8946
1693300403	ME-AX-2071
1693300503	ME-ES-2072
1693300507	ME-WP-2076
1693300603	ME-ES-2074
1693300607	ME-WP-2077
1693300703	ME-AX-2073
1693300707	ME-WP-2076
1693300803	ME-AX-5684
1693300807	ME-WP-2077
1693300903	ME-AX-5684
1693300907	ME-WP-2076
1693301007	ME-WP-2077
1693330014	ME-SB-5686
1693330114	ME-SB-5685
1693330127	ME-BJ-2075
1703300107	ME-WP-0606
1703300207	ME-WP-0607
1704630015	ME-DS-12601
1704630115	ME-DS-4175
1713230017	ME-LS-7295
1713380015	ME-AX-7294
1713510142	ME-SB-12505
1765V00500	ME-WP-2856
1803301048	ME-ES-0213
1803301148	ME-ES-0212
2013200744	ME-SB-9916
2013200744	ME-SB-9917
2013202444	ME-SB-9916
2013202444	ME-SB-9917
2013234885	ME-SB-6653
2013234985	ME-SB-6653
2013261581	ME-SB-14975
2013300703	ME-DS-3094
2013301203	ME-DS-3097
2013301503	ME-DS-3094
2013301603	ME-DS-3097
2013303807	ME-WP-0733
2013303907	ME-WP-0734
2013334514	ME-SB-1194
2013335114	ME-SB-1354
2013501070	ME-RK-7989
2013502953	ME-DS-6300
2013503253	ME-DS-6300
2013504706	ME-TC-0728

...MERCEDES-BENZ	MOOG
2013505606	ME-TC-0728
2013512742	ME-SB-1121
2013512842	ME-SB-4531
2013513642	ME-SB-4487
2013520027	ME-BJ-6313
2013523665	ME-SB-4512
2013528765	ME-SB-1645
2013528865	ME-SB-1645
2014601405	ME-DS-3100
2014601505	ME-DS-3100
202 330 20 07	ME-TC-0130
202 330 30 07	ME-TC-0129
202 330 31 07	ME-TC-0130
202 330 36 07	ME-TC-0129
202 330 48 07	ME-TC-0129
202 330 49 07	ME-TC-0130
2023230285	ME-SB-10139
2023300075	ME-RK-7345
2023302607	ME-WP-0606
2023302707	ME-WP-0607
2023304107	ME-WP-0606
2023304207	ME-WP-0607
2023330027	ME-BJ-6331
2023336414	ME-SB-1593
2023336714	ME-SB-1356
2023337714	ME-SB-4494
2023338414	ME-SB-1593
2023338714	ME-SB-1356
2023520065	ME-SB-4476
2023520165	ME-SB-4476
2024600405	ME-DS-6329
2024600505	ME-DS-4178
2033200489	ME-LS-1759
2033200789	ME-LS-5628
2033200889	ME-LS-5629
2033202189	ME-LS-9010
2033202589	ME-LS-1759
2033202689	ME-LS-9010
2033202889	ME-LS-1759
2033202989	ME-LS-9010
2033230685	ME-SB-7202
2033232085	ME-SB-7202
2033260181	ME-SB-13663
2033260281	ME-SB-15692
2033260381	ME-SB-12641
2033300111	ME-TC-1959
2033300211	ME-TC-1960
2033301611	ME-TC-1959
2033301711	ME-TC-1960
2033301903	ME-ES-2284
2033301911	ME-TC-0987
2033302003	ME-ES-2285
2033302011	ME-TC-0988
2033302303	ME-ES-2284
2033302403	ME-ES-2285
2033303303	ME-ES-10705

...MERCEDES-BENZ	MOOG
2033303311	ME-TC-0987
2033303403	ME-ES-10706
2033303411	ME-TC-0988
2033303511	ME-TC-1959
2033303611	ME-TC-1960
2033303903	ME-ES-2284
2033303911	ME-TC-1959
2033304003	ME-ES-2285
2033304011	ME-TC-1960
2033330214	ME-SB-5627
2033330314	ME-SB-5626
2033330914	ME-SB-5626
2033331014	ME-SB-5627
2033500353	ME-TC-5774
2033500753	ME-TC-5774
2033510142	ME-SB-10142
2033510742	ME-SB-12505
2034630296	K150265
204 351 03 42	ME-SB-8827
204 351 08 42	ME-SB-8827
2043200489	ME-LS-5683
2043200589	ME-LS-5682
2043200789	ME-LS-10529
2043201789	ME-LS-5680
2043201889	ME-LS-5681
2043202289	ME-LS-10530
2043203789	ME-LS-5678
2043203889	ME-LS-5679
2043300903	ME-ES-5648
2043301003	ME-ES-5649
2043301903	ME-ES-9091
2043301911	ME-TC-0987
2043302003	ME-ES-9092
2043302011	ME-TC-0988
2043303111	ME-TC-5675
2043303211	ME-TC-5676
2043303303	ME-ES-7771
2043303311	ME-TC-1959
2043303403	ME-ES-7770
2043303411	ME-TC-1960
2043304311	ME-TC-1959
2043304411	ME-TC-1960
2043306711	ME-TC-5675
2043306811	ME-TC-5676
2043308011	ME-TC-13773
2043308111	ME-TC-13725
2043308211	ME-TC-13726
2043330414	ME-SB-5677
2043331014	ME-SB-5627
2043331114	ME-SB-5627
2043380015	ME-AX-5674
2043380315	ME-AX-7769
2043380415	ME-AX-5674
2043380515	ME-AX-7769
2043500553	ME-TC-8815
2043500553 (-)	ME-SB-8817

...MERCEDES-BENZ	MOOG
2043500653	ME-TC-8816
2043500653 (-)	ME-SB-8817
2043501506	ME-TC-8819
2043501506 (-)	ME-SB-8820
2043501506 (-)	ME-SB-8821
2043501606	ME-TC-8818
2043501606 (-)	ME-SB-8820
2043501606 (-)	ME-SB-8821
2043502106	ME-TC-8823
2043502106 (-)	ME-SB-8824
2043502106 (-)	ME-SB-8825
2043502206	ME-TC-8822
2043502206 (-)	ME-SB-8824
2043502206 (-)	ME-SB-8825
2043502706	ME-TC-8814
2043510442	ME-SB-8829
2043520365	ME-TC-8822
2043521065	ME-SB-8830
20435210656	ME-SB-8830
2043530043	ME-SB-3716
2053230717	ME-LS-15113
2053230817	ME-LS-15114
2053260317	ME-LS-14645
2053260417	ME-LS-14646
2053520508	ME-SB-3716
2054600005	ME-ES-15171
2054600105	ME-ES-15172
2054600605	ME-ES-15111
2054600705	ME-ES-15112
2054600805	ME-AX-14590
2073300500	ME-AX-15337
208 330 05 07	ME-TC-0130
208 330 13 07	ME-TC-0129
208 330 14 07	ME-TC-0130
210 330 22 07	ME-TC-0129
210 330 23 07	ME-TC-0130
210 330 25 07	ME-TC-0129
210 330 26 07	ME-TC-0130
210 330 50 07	ME-TC-0129
210 330 51 07	ME-TC-0130
210 330 87 07	ME-TC-0129
210 330 88 07	ME-TC-0130
2103202189	ME-LS-0726
2103202289	ME-LS-0725
2103202289	ME-LS-0726
2103203689	ME-LS-0726
2103203789	ME-LS-0725
2103203789	ME-LS-0726
2103231485	ME-SB-7206
2103300035	ME-BJ-6331
2103300175	ME-RK-6604
2103300427	ME-BJ-6331
2103300475	ME-RK-6604
2103303407	ME-WP-0685
2103303507	ME-WP-0684
2103304507	ME-WP-0684

...MERCEDES-BENZ	MOOG
2103306107	ME-WP-0685
2103306207	ME-WP-0684
2103307607	ME-WP-0685
2103307707	ME-WP-0684
2103309007	ME-WP-0685
2103309107	ME-WP-0684
2103330407	ME-BJ-6331
2103330427	ME-BJ-6331
2103335514	ME-SB-1357
2103336014	ME-SB-1277
2103336814	ME-SB-1277
2103380415	ME-AX-6338
2103380415	ME-RK-15041
2103380515	ME-ES-6339
2103380615	ME-ES-6340
2103381115	ME-AX-8002
2103500029	ME-TC-0731
2103500653	ME-DS-6300
2103500953	ME-DS-6300
2103501606	ME-TC-0732
2103501706	ME-TC-0732
2103501853	ME-DS-6300
2103502153	ME-DS-6300
2103502406	ME-TC-0732
2103502506	ME-TC-0732
2103502753	ME-DS-6300
2103503306	ME-TC-0728
2103503406	ME-TC-0732
2103503806	ME-RK-3952
2103503806	ME-TC-0731
2103503806S1	ME-RK-3952
2103510542	ME-SB-7961
2103510842	ME-SB-4457
2104602300	K150087
2104630798	K150087
2113200026	ME-SB-9922
2113200889	ME-LS-3316
2113200989	ME-LS-2726
2113201089	ME-LS-2727
2113203389	ME-LS-3316
2113203889	ME-LS-2727
2113203989	ME-LS-2726
2113204789	ME-LS-14771
2113204889	ME-LS-14772
2113230068	ME-BJ-2725
2113300103	ME-ES-2728
2113300138	ME-TC-1961
2113300203	ME-ES-2729
2113300235	ME-BJ-3697
2113300335	ME-BJ-6331
2113300435	ME-BJ-3697
2113301111	ME-TC-1970
2113301211	ME-TC-1971
2113301511	ME-TC-1970
2113301611	ME-TC-1971
2113302303	ME-ES-2728

...MERCEDES-BENZ	MOOG
2113302403	ME-ES-2729
2113302503	ME-ES-2728
2113302603	ME-ES-2729
2113302703	ME-ES-2728
2113302803	ME-ES-2729
2113302903	ME-AX-13694
2113302903	ME-AX-2266
2113302903	ME-RK-15070
2113302911	ME-TC-1970
2113303011	ME-TC-1971
2113304307	ME-TC-1961
2113304311	ME-TC-1970
2113304407	ME-TC-1962
2113304411	ME-TC-1971
2113306707	ME-TC-1961
2113306807	ME-TC-1962
2113308107	ME-TC-1968
2113308207	ME-TC-1969
2113308907	ME-TC-1961
2113309007	ME-TC-1962
2113309107	ME-TC-1968
2113309207	ME-TC-1969
2113309907	ME-BJ-8111
2113330814	ME-SB-3714
2113331014	ME-SB-2733
2113331114	ME-SB-2732
2113331914	ME-SB-2730
2113332514	ME-SB-2733
2113332814	ME-SB-2733
2113332914	ME-SB-12586
2113380015	ME-AX-13694
2113380015	ME-AX-2266
2113380015	ME-RK-15070
2113511042	ME-SB-10144
2113511342	ME-SB-10144
2113511442	ME-SB-10144
2113520865	ME-SB-4414
2123201189	ME-LS-10471
2123201289	ME-LS-10472
2123202589	ME-LS-13911
2123202689	ME-LS-13912
2123300035	ME-BJ-10684
2123300135	ME-BJ-10684
2123302103	ME-AX-10146
2123302203	ME-ES-10148
2123302303	ME-ES-10147
2123302403	ME-ES-13913
2123302703	ME-ES-13914
2123302803	ME-AX-13792
2123302911	ME-TC-10805
2123302911 (-)	ME-SB-10839
2123303011	ME-TC-10806
2123303900	ME-TC-10805
2123304000	ME-TC-10806
2123330014	ME-SB-10498
2124600105	ME-ES-13913

...MERCEDES-BENZ	MOOG
2183300300	ME-ES-10147
2183300400	ME-ES-10148
2193300107	ME-TC-1961
2193300207	ME-TC-1962
2203201589	ME-LS-4179
2203201589	ME-LS-4180
2203201589 (-)	ME-SB-12528
2203201689	ME-LS-4179
2203201689	ME-LS-4180
2203201689 (-)	ME-SB-12528
2203203689	ME-LS-2714
2203230368	ME-BJ-2725
2203300427	ME-BJ-3697
2203301407	ME-TC-3872
2203301507	ME-TC-3873
2203301711	ME-TC-3871
2203301811	ME-TC-3870
2203303311	ME-TC-3870
2203303411	ME-TC-3871
2203304311	ME-TC-3870
2203304411	ME-TC-3871
2203305711	ME-TC-3870
2203305811	ME-TC-3871
2203307707	ME-TC-3874
2203307807	ME-TC-3875
2203308307	ME-TC-3872
2203308407	ME-TC-3873
2203308607	ME-SB-4188
2203308907	ME-TC-3874
2203309007	ME-TC-3875
2203309307	ME-TC-3872
2203309407	ME-TC-3873
2203330127	ME-BJ-3697
2203330227	ME-BJ-3697
2203330327	ME-BJ-3697
2203330427	ME-BJ-3697
2203330727	ME-BJ-3697
2203331714	ME-SB-4188
2203331814	ME-SB-4187
2203333114	ME-SB-4188
2203380515	ME-ES-4181
2203380715	ME-AX-2266
2203380715	ME-RK-15070
2203381015	ME-ES-4181
2203381315	ME-ES-14841
2203381415	ME-ES-14842
2203500453	ME-TC-4185
2203502206	ME-TC-4182
2203502406	ME-TC-4183
2203502606	ME-TC-4184
2203502706	ME-TC-4184
2203520027	ME-SB-5169
2203520065	ME-SB-4186
2203520227	ME-BJ-6313
2203520265	ME-SB-10143
2203521365	ME-SB-10143

...MERCEDES-BENZ	MOOG
2204630296	K150221
2213200189	ME-LS-4700
2213200289	ME-LS-4701
2213201589	ME-LS-13695
2213201689	ME-LS-13696
2213201989	ME-LS-5170
2213202289	ME-LS-5171
2213300241	ME-TC-5181
2213300307	ME-TC-5174
2213300407	ME-TC-5175
2213301503	ME-ES-5172
2213301603	ME-AX-5173
2213302311	ME-TC-5180
2213302411	ME-TC-5181
2213303111	ME-TC-5675
2213303903	ME-ES-5172
2213306311	ME-TC-5180
2213306411	ME-TC-5181
2213306707	ME-TC-5177
2213306807	ME-TC-5178
2213307707	ME-TC-13809
2213307807	ME-TC-13810
2213308107	ME-TC-5177
2213308207	ME-TC-5178
2213308707	ME-TC-13439
2213308707	ME-TC-5177
2213308807	ME-TC-13440
2213308807	ME-TC-5178
2213308907	ME-TC-5174
2213309007	ME-TC-5175
2213330214	ME-SB-5176
2213330714	ME-SB-5179
2213330814	ME-SB-5182
2213331914	ME-SB-12500
2213500206	ME-TC-5185
2213500406	ME-TC-5183
2213500606	ME-TC-5184
2213500706	ME-TC-5187
2213500806	ME-TC-5188
2213501006	ME-TC-5186
2213501153	ME-TC-5189
2213501253	ME-TC-5190
2213521165	ME-SB-12530
2213521265	ME-SB-12531
2213521365	ME-SB-12532
2213521465	ME-SB-12533
2213522165	ME-SB-12534
2213522265	ME-SB-12535
2303200589	ME-LS-8969
2303200689	ME-LS-8970
2303300138	ME-TC-1961
2303300203	ME-ES-4181
2303300403	ME-ES-4181
2303301711	ME-TC-1970
2303301811	ME-TC-1971
2303303911	ME-TC-1959

...MERCEDES-BENZ	MOOG
2303380015	ME-AX-2266
2303380015	ME-RK-15070
2303380115	ME-ES-4181
2303500329	ME-TC-3704
2303500329 (-)	ME-SB-10151
2303500329 (-)	ME-SB-10152
2303500429	ME-TC-3699
2303500429 (-)	ME-SB-10151
2303500429 (-)	ME-SB-10152
2303502006	ME-TC-1976
2303502706	ME-TC-1972
2303502806	ME-TC-1973
2303503506	ME-TC-1974
2303503606	ME-TC-1975
2303510242	ME-SB-10145
2303520027	ME-BJ-6313
2303521565	ME-SB-3716
2463200489	ME-LS-13438
2463200489 (-)	ME-SB-13580
2463200689	ME-LS-13437
2463200789	ME-LS-13438
2463301700	ME-ES-13435
2463301707	ME-TC-13335
2463301800	ME-ES-13436
2463301807	ME-TC-13336
2463304700	ME-TC-13335
2463304800	ME-TC-13336
2463330014	ME-SB-13337
2463330100	ME-SB-13337
2463330114	ME-SB-13334
2463330200	ME-SB-13338
2463330214	ME-SB-13338
2463380000	ME-AX-13322
2463500053	ME-TC-13797
2463500406	ME-TC-13803
2463500506	ME-TC-13804
2463501006	ME-TC-13805
2463520165	ME-SB-13798
2463520265	ME-SB-13801
2463520965	ME-SB-13799
2513201232	ME-LS-4698
2513201232	ME-LS-5595
2513300703	ME-ES-5593
2513300703	ME-ES-5599
2513300707	ME-TC-8797
2513300803	ME-ES-5594
2513300803	ME-ES-5600
2513300807	ME-TC-8796
2513301107	ME-TC-14535
2513301207	ME-TC-14536
2513301307	ME-TC-14535
2513301407	ME-TC-14536
2513301507	ME-TC-14535
2513301607	ME-TC-14536
2513301907	ME-TC-14535
2513302007	ME-TC-14536

...MERCEDES-BENZ	MOOG
2533230117	ME-LS-15299
2533230217	ME-LS-15300
2D0407021	ME-WP-2332
2D0407361A	ME-BJ-6345
2D0422811	ME-ES-6344
2D0511171	ME-SB-2336
2D0511329	ME-LS-1979
3094061605	DB-DL-6134
3094600305	DB-DL-6134
3094600405	DB-DL-6134
3094600505	DB-DL-6134
3094600805	DB-DL-6134
3094601105	DB-DL-6134
3094601305	DB-DL-6134
3094601405	DB-DL-6134
3094602205	DB-DL-6134
3094602305	DB-DL-6134
3094602405	DB-DL-6134
3094602905	DB-DL-6134
3094603005	DB-DL-6134
3094603105	DB-DL-6134
3094603205	DB-DL-6134
3103300435	ME-ES-0643
3103301335	ME-ES-0643
31058602332	ME-BJ-6331
3200028	ME-BJ-6287
3200128	ME-BJ-6287
32211114842	ME-ES-0212
3305035	ME-ES-0643
3380710	ME-ES-0212
3380810	ME-ES-0213
3381910	ME-ES-0212
3382010	ME-ES-0213
3384310	ME-ES-3096
3384510	ME-ES-3096
3384710	ME-ES-6129
3384910	ME-ES-3098
3385010	ME-ES-0213
3385110	ME-ES-6129
3385210	ME-ES-0212
3385410	ME-ES-6129
3385610	ME-ES-6310
3385910	ME-ES-6310
3386010	ME-ES-3096
3386110	ME-ES-3095
3386210	ME-ES-3096
3386310	ME-ES-3098
4143200189	ME-LS-5144
4143200289	ME-LS-5144
4143200389	ME-LS-5144
4143300007	ME-WP-2747
4143300035	ME-AX-2754
4143300107	ME-WP-2748
4143300307	ME-WP-2747
4143300407	ME-WP-2748
4143300507	ME-WP-2747

...MERCEDES-BENZ	MOOG
4143300607	ME-WP-2748
4143330014	ME-SB-2758
4143330027	ME-BJ-2749
4143330114	ME-SB-2759
4143330127	ME-BJ-2749
4143330135	ME-ES-2751
4143330227	ME-BJ-2749
4143330235	ME-ES-2750
4144600005	ME-ES-2750
4144600105	ME-ES-2751
4144600205	ME-AX-2754
4144600800	K150256
4153200189	RE-LS-2088
4153300200	RE-WP-7904
4153300300	RE-WP-7903
4154600005	RE-ES-7306
4154600105	RE-ES-7307
4513200189S1	ME-LS-10158
4513300010	ME-TC-10751
4513300010 (-)	ME-BJ-10749
4514600051 (-)	ME-AX-13995
4514600151 (-)	ME-AX-13995
4514600451 (-)	ME-AX-13995
4543200010	ME-LS-2078
4543300707	ME-WP-5151
4543300707 (-)	ME-SB-5153
4543300707 (-)	ME-SB-5154
4543300807	ME-WP-5152
4543300807 (-)	ME-SB-5153
4543300807 (-)	ME-SB-5154
4543330127	ME-BJ-5150
4544600205	ME-ES-2079
4600005	ME-DS-6060
4600105	ME-DS-6060
4602148	ME-ES-0643
4602248	ME-ES-2041
4604148	ME-ES-0643
4604548	ME-ES-0643
4604648	ME-ES-2041
4608548	ME-ES-0643
4608648	ME-ES-2041
4608748	ME-ES-2041
4631029	ME-ES-0642
485200780R	OP-ES-10120
485206730R	OP-ES-10119
5118696AA	ME-LS-8893
5118729AA	ME-SB-10166
5168158AA (-)	CH-SB-14092
5168159AA (-)	CH-SB-14092
6013210350	ME-SB-3650
6013240050	ME-SB-4518
6013240150	ME-SB-4518
6013260482	ME-SB-3880
6013300019	ME-RK-2002
6013300435	ME-ES-0642
6013300535	ME-ES-0644

...MERCEDES-BENZ	MOOG
6013300635	ME-ES-0642
6013300735	ME-ES-0644
6013305235	ME-ES-0644
6013305335	ME-ES-0642
6013325306	ME-RK-2002
6014600005	DB-DL-6134
6014600105	DB-DL-6134
6014600205	DB-DL-6134
6014600305	DB-DL-6134
6014600505	ME-DS-6231
6014600605	ME-DS-6231
6014600705	ME-DS-6231
6014600805	ME-DS-6231
6014600905	ME-DS-6231
6014601005	ME-DS-6231
6014601105	ME-DS-6231
6014601205	ME-DS-6231
6014601305	ME-DS-6231
6014601505	ME-DS-6231
6015865033	ME-RK-2002
6023240050	ME-SB-4518
6023240150	ME-SB-4518
6023300035	DB-ES-3090
6023300135	DB-ES-3089
6023300303	ME-ES-1807
6023300403	ME-ES-1807
6023300903	ME-DS-4867
6023301003	ME-DS-4867
6023305303	ME-DS-4867
6023305403	ME-DS-4867
6023305435	DB-ES-3090
6023305535	DB-ES-3089
6023305735	DB-ES-3089
6023305835	DB-ES-3090
6023305935	DB-ES-3090
6083200028	ME-BJ-6287
6083200128	ME-BJ-6287
6083305535	DB-ES-3090
6113240050	ME-SB-10166
6113240350	ME-SB-10166
6113240450	ME-SB-10166
6203300103	ME-ES-1807
6313200028	ME-BJ-6287
6313200228	ME-BJ-6287
6313300303	ME-DS-1691
6313300310	ME-ES-1760
6313300503	ME-AX-2735
6313300535	ME-ES-2739
6313300603	ME-AX-2737
6313380310	ME-ES-1760
6314600705	ME-AX-2734
6383170312	ME-SB-4490
6383170912	ME-SB-4490
6383230268	ME-LS-0436
6383230285	ME-SB-6819
6383230368	ME-LS-0435

...MERCEDES-BENZ	MOOG
6383230420	ME-SB-9920
6383230468	ME-LS-2252
6383230568	ME-LS-2254
6383260016	ME-LS-2248
6383260116	ME-LS-2248
6383260281	ME-SB-6820
6383300010	ME-WP-2250
6383300027	ME-BJ-0366
6383300110	ME-WP-2251
6383300510	ME-WP-2250
6383300610	ME-WP-2251
6383330014	ME-SB-2255
6383330027	ME-BJ-0366
6383330814	ME-SB-2256
6383520450	ME-SB-12537
6383520650	ME-SB-12537
6384600048	ME-ES-6342
6384600055	ME-AX-6341
6384600055	ME-RK-15031
6384600205	ME-AX-6341
6384600205	ME-RK-15031
6384600255	ME-AX-6341
6384600255	ME-RK-15031
6393200089	ME-LS-3542
6393200189	ME-LS-3819
6393200289	ME-LS-3542
6393200389	ME-LS-3819
6393200489	ME-LS-3542
6393200589	ME-LS-3819
6393200989	ME-LS-15397
6393201089	ME-LS-15398
6393260216	ME-LS-12538
6393260616	ME-LS-12538
6393261081	ME-SB-12539
6393301207	ME-WP-14045
6393301307	ME-WP-14046
6393301401	ME-WP-14045
6393301501	ME-WP-14046
6393330214	ME-SB-2255
6393330227	ME-BJ-4392
6393330314	ME-SB-2255
6393330X14	ME-SB-15161
6393331114	ME-SB-15161
6393530050	ME-SB-12537
6394600048	ME-ES-4393
6394600055	ME-AX-4190
6394600055	ME-RK-15044
6394600255	ME-AX-4190
6394600255	ME-RK-15044
6394600348	ME-ES-4394
6394600448	ME-ES-4393
6394600548	ME-ES-4394
6394600648	ME-ES-4393
6394600748	ME-ES-4394
68022614AA	CH-SB-14092
8200586561	RE-WP-7903

...MERCEDES-BENZ	MOOG
8200586567	RE-WP-7904
892495	ME-SB-1277
901 323 01 85	ME-SB-7982
9012220627	AMGK7455
9013200089	ME-LS-1979
9013200289	ME-LS-1977
9013200389	ME-LS-1978
9013200589	ME-LS-8893
9013200689	ME-LS-5618
9013200689	ME-LS-7995
9013230285	ME-SB-2275
9013240150	ME-SB-10162
9013240350	ME-SB-10163
9013260081	ME-SB-7901
9013260181	ME-SB-13689
9013301607	ME-WP-2332
9013301707	ME-WP-2333
9013301807	ME-WP-2332
9013301907	ME-WP-2333
9013302407	ME-WP-2332
9013302507	ME-WP-2333
9013330214	ME-SB-2336
9013330627	AMGK7455
9013330627	ME-BJ-6345
9013330727	AMGK7455
9013330727	ME-BJ-6345
9013331027	ME-BJ-6345
9013331127	AMGK7455
9013331127	ME-BJ-6345
9013331227	AMGK7455
9013331227	ME-BJ-6345
9013331327	ME-BJ-15457
9014600048	ME-ES-6344
9014600148	ME-ES-6344
9014600155	ME-AX-6343
9014600155	ME-RK-15020
9014600248	ME-ES-6344
9014600255	ME-AX-6343
9014600255	ME-RK-15020
9014600348	ME-ES-6344
9014600455	ME-AX-6343
9014600455	ME-RK-15020
9014605500	K150127
9014620096	K150148
9014620296	K150148
9043230085	ME-SB-7765
9043260881	ME-SB-7898
9043261081	ME-SB-10161
906 323 14 85	ME-SB-7893
906 323 35 85	ME-SB-7893
9063201389	ME-LS-5618
9063201489	VO-LS-13833
9063201789	ME-LS-4890
9063201889	ME-LS-4891
9063230520	ME-SB-13486
9063231685	ME-SB-7894

...MERCEDES-BENZ	MOOG
9063260381	ME-SB-12547
9063260781	ME-SB-12547
9063304007	ME-BJ-4952
9063304007	ME-WP-4950
9063304107	ME-BJ-4952
9063304107	ME-WP-4951
9063304607	ME-BJ-4952
9063304707	ME-BJ-4952
9063330014	ME-SB-5619
9063330114	ME-SB-5620
9063330227	ME-BJ-4952
9064600048	ME-ES-4953
9064600055	ME-AX-4874
9064600055	ME-RK-15043
9064600148	ME-ES-4953
9064600155	ME-AX-4874
9064600155	ME-RK-15043
9064600348	ME-ES-4953
A9013260181	ME-SB-13689
A9063304007	ME-BJ-4952
A9063304007	ME-WP-4950
A9063304107	ME-BJ-4952
A9063304607	ME-BJ-4952
A9063304707	ME-BJ-4952
A9063330227	ME-BJ-4952

MG	MOOG
EGP1662	RO-LS-1831
EGP1673	RO-SB-2840
GSJ1000	RO-WP-1981
GSJ1001	RO-WP-1980
GSJ1011	RO-ES-3547
GSJ257	RO-BJ-3562
GSJ286	RO-TC-3550
GSJ287	RO-TC-3551
GSJ485	HO-WP-0165
GSJ486	HO-WP-0166
GSJ495	HO-ES-0170
GSJ496	HO-ES-0171
GSJ497	RO-BJ-6596
GSJ498	RO-BJ-6597
GSJ499	HO-BJ-0167
GSJ827	RO-ES-2034
GSJ835	RO-WP-0504
GSJ836	RO-WP-0505
GSJ877	RO-ES-1982
GSJ878	RO-ES-1983
GSV1170	RO-AX-2843
QJB100120	RO-ES-3547
QJB100180	RO-ES-1983
QJB100190	RO-ES-1982
RBJ101069	RO-WP-6595
RBJ101070	RO-WP-6594
RBM100111	RO-LS-6600
RBM100240	RO-LS-1986
RBX100680	HO-SB-8479

...MG	MOOG
RGD100561	RO-LS-1985
RGD100571	RO-LS-1984
RGX10007	HO-SB-1858

MINI	MOOG
31103412726	BM-BJ-3861
31103418337	BM-TC-3855
31103418338	BM-TC-3856
31103438623	BM-BJ-8826
31103443127	BM-TC-3862
31103443128	BM-TC-3863
31104026719	BM-TC-3686
31104026720	BM-TC-3687
31106771194	BM-SB-7402
31106771897	BM-SB-7401
31106778015	BM-SB-7406
31106779437	BM-BJ-1881
31106779438	BM-BJ-1880
31106799960 (-)	BM-AX-10978
31109803662	BM-BJ-13445
31111096982	BM-SB-2232
31120304308	BM-SB-8773
31120307882	BM-SB-4412
31120393540	BM-SB-3734
31121092010	BM-SB-2213
31121092023	BM-TC-0477
31121092024	BM-TC-0476
31121092609	BM-WP-2430
31121092610	BM-WP-2431
31121093449	BM-TC-4357
31121093450	BM-TC-4356
31121094465	BM-WP-4738
31121094465	BM-WP-8861
31121094466	BM-WP-4739
31121094466	BM-WP-8862
31121096169	BM-TC-0920
31121096170	BM-TC-0918
31121096315	BM-TC-0898
31121096316	BM-TC-0897
31121096425	BM-BJ-0899
31121096685	BM-BJ-4346
31121124401	BM-TC-4217
31121124622	BM-SB-1591
31121126253	BM-BJ-4306
31121126254	BM-BJ-4307
31121126255	BM-SB-4381
31121126256	BM-SB-4382
31121127142	BM-TC-4224
31121127725	BM-TC-4367
31121127726	BM-TC-4366
31121129245	BM-TC-4223
31121130123	BM-SB-1135
31121132159	BM-DS-4332
31121132160	BM-DS-4333
31121133236	BM-SB-3688
31121135351	BM-SB-1128

...MINI	MOOG
31121136529	BM-TC-4369
31121136530	BM-TC-4368
31121136531	BM-SB-5013
31121136532	BM-SB-5014
31121136605	BM-SB-1122
31121136607	BM-SB-1133
31121139131	BM-BJ-4345
31121139987	BM-TC-4371
31121139988	BM-TC-4370
31121139992	BM-TC-4218
31121139999	BM-TC-4317
31121140000	BM-TC-4318
31121141722	BM-TC-4362
31121141723	BM-TC-4363
31121141961	BM-TC-0924
31121141962	BM-TC-0923
31121142087	BM-TC-4361
31121142088	BM-TC-4360
31121701077	BM-BJ-4328
31122282121	BM-TC-5164
31122282122	BM-TC-5165
31124015707	BM-WP-1885
31124015708	BM-WP-1883
31124026453	BM-WP-2443
31124026454	BM-WP-2444
31124036269	BM-TC-3732
31124036270	BM-TC-3733
31124048627	BM-WP-5606
31124048628	BM-WP-5607
31124048628 (-)	BM-AX-5603
31124048629	BM-BJ-5604
31124048630	BM-BJ-5605
31124048662 (-)	BM-AX-5603
31126753990	BM-WP-1883
31126753991	BM-BJ-1881
31126753992	BM-BJ-1880
31126754899	BM-SB-13431
31126754900	BM-SB-13432
31126755835	BM-WP-2437
31126755836	BM-WP-2438
31126756309	BM-BJ-1882
31126756989	BM-WP-1885
31126757551	BM-SB-2760
31126757561	BM-SB-7391
31126757562	BM-SB-7392
31126757623	BM-SB-2202
31126757623	BM-SB-8864
31126757623 (-)	BM-SB-0353
31126757623 (-)	BM-SB-8863
31126760181	BM-TC-3684
31126760182	BM-TC-3685
31126761409	BM-WP-1885
31126761410	BM-WP-1883
31126763699	BM-TC-3738
31126763700	BM-TC-3739
31126765597	BM-SB-3737

...MINI	MOOG
31126765992	BM-SB-3689
31126765998	BM-TC-5632
31126767530	BM-SB-5608
31126767651	BM-SB-10783
31126768989	BM-TC-13687
31126769715	BM-SB-2429
31126771893	BM-TC-7389
31126771894	BM-TC-7390
31126772235	BM-SB-12600
31126772236	BM-SB-12599
31126772301	BM-WP-5606
31126772302	BM-WP-5607
31126772303	BM-BJ-5604
31126772304	BM-BJ-5605
31126772305	BM-BJ-10485
31126773949	BM-TC-7398
31126773950	BM-TC-7399
31126774829	BM-TC-5631
31126775967 (-)	BM-SB-13252
31126775971 (-)	BM-SB-10467
31126775972 (-)	BM-SB-10467
31126775979 (-)	BM-SB-10467
31126776417	BM-TC-8843
31126776417 (-)	BM-SB-8776
31126776418	BM-TC-8844
31126776418 (-)	BM-SB-8776
31126777753	BM-BJ-12620
31126779871	BM-TC-13459
31126779871 (-)	BM-SB-13252
31126783443	BM-BJ-1882
31126787669	BM-TC-13339
31126787670	BM-TC-13340
31126791455	BM-SB-10916
31126794203 (-)	BM-SB-10915
31126794204 (-)	BM-SB-10915
31126852991	BM-TC-10923
31126852991 (-)	BM-SB-10984
31126852992	BM-TC-10924
31126852992 (-)	BM-SB-10984
31129058819	BM-SB-1775
31129071085	BM-SB-2433
31129803497	BM-SB-13447
31129803498	BM-SB-13448
31129803662	BM-SB-13446
31129803788	BM-SB-13446
31131489294	BM-BJ-1881
31303404065	BM-SB-13400
31303414299	BM-LS-3859
31303414300	BM-LS-3860
31306758309	BM-SB-10960
31306781549	BM-LS-8769
31306781550	BM-LS-8768
31306787163	BM-LS-13423
31306787164	BM-LS-13424
31306792211	BM-LS-10981
31306792212	BM-LS-10982

...MINI	MOOG
31306862863	BM-LS-14782
31331090467	BM-SB-9556
31331090611	BM-SB-9550
31331091708	BM-SB-9573
31331094616	BM-SB-9571
31331096311	BM-SB-9554
31331124508	BM-SB-9560
31332227897	BM-SB-9566
31332227898	BM-SB-9565
31336753966	BM-SB-9548
31336759498	BM-SB-9531
31351090186	BM-SB-6752
31351090263	BM-SB-6754
31351090860	BM-SB-6753
31351091764	BM-LS-4311
31351091855	BM-DS-4359
31351091856	BM-DS-4358
31351093108	BM-SB-6759
31351094145	BM-SB-6760
31351094554	BM-SB-13491
31351094556	BM-SB-13495
31351095271	BM-SB-6757
31351095664	BM-LS-0420
31351095694	BM-LS-0434
31351095695	BM-DS-4364
31351097021	BM-SB-7210
31351124380	BM-LS-4322
31351126774	BM-SB-6707
31351131621	BM-SB-6765
31351133738	BM-SB-6758
31351135805	BM-SB-6709
31351507989	BM-LS-1886
31351507993	BM-SB-13383
31351701066	BM-DS-4329
31352227203	BM-LS-5198
31354014531	BM-LS-3675
31354014532	BM-LS-3676
31354014575	BM-LS-4429
31354014576	BM-LS-4430
31356750703	BM-LS-2115
31356750704	BM-LS-2116
31356751079	BM-LS-4195
31356751080	BM-LS-4196
31356753767	BM-LS-2435
31356753768	BM-LS-2434
31356754810	BM-SB-13383
31356757069	BM-SB-13382
31356757146	BM-SB-7217
31356758302	BM-SB-13383
31356759537	BM-LS-1887
31356764113	BM-SB-3678
31356765574	BM-SB-3724
31356765933	BM-LS-3725
31356765934	BM-LS-3727
31356772843	BM-SB-12540
31356772844	BM-SB-13384

...MINI	MOOG
31356773023	BM-LS-7343
31356773024	BM-LS-7344
31356777319	BM-LS-8806
31356778831	BM-LS-1887
31359806351	BM-LS-13597
31359806352	BM-LS-13598
32 10 6 867 404 (-)	BM-AX-14877
32 10 6 867 405 (-)	BM-AX-14877
32106765089	BM-ES-3728
32106765090	BM-ES-3729
32106765235	BM-AX-3731
32106778437	BM-ES-5601
32106778438	BM-ES-5602
32106784790	BM-ES-10441
32106784792	BM-AX-8789
32106784796	BM-ES-10442
32106793621 (-)	BM-AX-8885
32106793622 (-)	BM-AX-8885
32106793623	BM-ES-8883
32106793624	BM-ES-8884
32106799966	BM-ES-10979
32106799967	BM-ES-10980
32106854737	BM-ES-14788
32109805551	BM-ES-14905
32109805552	BM-ES-14906
32109808839	BM-ES-13441
32109808840	BM-ES-13442
32111091767	BM-DS-4355
32111091768	BM-DS-4354
32111091769	BM-ES-4270
32111091770	BM-ES-4279
32111094673 (-)	BM-AX-1843
32111094673 (-)	BM-RK-15011
32111125186	BM-DS-4301
32111125186	BM-DS-4304
32111126620	BM-AX-4305
32111126757	BM-ES-4302
32111127124	BM-AX-4303
32111139313	BM-ES-4341
32111139314	BM-ES-4344
32111139315	BM-DS-4339
32111139316	BM-DS-4340
32111139318	BM-DS-4343
32111139318 (-)	BM-AX-0359
321167545634 (-)	BM-AX-1877
32116761560	BM-ES-6986
32136756757	K150224
32136761559	BM-ES-6983
32211091723	BM-ES-4375
32211091724	BM-ES-4374
32211091917	BM-DS-4349
32211095955 (-)	BM-AX-4342
32211095955 (-)	BM-RK-15012
32211095955 (-)	BM-RK-15034
32211095955 (-)	BM-RK-15036
32211095955 (-)	BM-RK-15037

...MINI	MOOG
32211095956	BM-DS-1788
32211095957	BM-ES-0491
32211095958	BM-ES-0490
32211096327	BM-ES-2113
32211124231	BM-DS-4214
32211124232	BM-DS-4226
32211127917	BM-ES-4215
32211127918	BM-ES-4216
32211130655	BM-DS-4315
32211130661	BM-DS-4331
32211136450	BM-TC-7991
32211136452	BM-SB-4477
32211138851	BM-DS-4316
32211138852	BM-DS-4334
32211141345	BM-ES-4350
32211141346	BM-ES-4351
32211701038	BM-ES-4326
32216751277	BM-DS-2114
32216751277 (-)	BM-AX-2426
32216754565	BM-ES-1874
32216754566	BM-ES-1871
32216756368 (-)	BM-AX-2436
32216756369	BM-ES-2439
32216760354	BM-ES-4876
32216762243 (-)	BM-AX-3730
32216762243 (-)	BM-RK-15072
32216762243 (-)	BM-RK-15076
32216762403 (-)	BM-AX-3683
32216767860	BM-ES-6593
32216773739	BM-ES-5621
32216773740	BM-AX-5622
32221096897	BM-DS-3583
32413413476	BM-ES-3857
33171093008	BM-SB-4510
33171130874	BM-SB-1750
33171131245	BM-SB-2425
33171135242	BM-SB-4499
33176760287	BM-SB-8754
33176770788	BM-SB-4534
33311090946	BM-SB-4453
33311090956	BM-SB-3614
33311091422	BM-SB-7948
33311092515	BM-SB-4521
33311092516	BM-SB-4522
33311094036	BM-SB-10728
33311128670	BM-SB-4194
33311130488	BM-SB-4480
33313418342	BM-SB-8046
33316770454	BM-SB-7946
33316770781	BM-SB-4524
33319059300	BM-SB-3966
33319059301	BM-SB-8757
33321090030	BM-TC-0928
33321090102	BM-SB-2200
33321090504	BM-SB-3694
33321090745	BM-TC-0486

...MINI	MOOG
33321090815	BM-TC-0449
33321090816	BM-TC-0448
33321090905	BM-TC-1752
33321090906	BM-TC-3152
33321091620 (-)	BM-SB-8108
33321091620 (-)	BM-SB-8109
33321092237	BM-TC-3936
33321095411	BM-TC-2122
33321095412	BM-TC-2125
33321095414	BM-TC-2118
33321096797	BM-TC-3691
33321123463	BM-DS-4225
33321136311	BM-SB-4483
33321137571	BM-SB-3978
33321137806	BM-SB-8339
33321138722	BM-SB-4842
33321490085	BM-TC-12542
33321490085 (-)	BM-SB-12543
33324046917	BM-TC-10489
33324046918	BM-TC-10490
33326760054	BM-TC-12542
33326760054 (-)	BM-SB-12543
33326763092	BM-SB-7445
33326763093	BM-SB-8753
33326763471	BM-TC-3742
33326763473	BM-TC-3741
33326765425	BM-TC-3740
33326765534	BM-SB-7885
33326765535	BM-SB-8752
33326767206 (-)	BM-SB-12543
33326767967	BM-TC-3692
33326767968	BM-TC-3693
33326768268 (-)	BM-SB-3695
33326768724	BM-TC-12542
33326768726	BM-TC-12542
33326768726 (-)	BM-SB-12543
33326768789 (-)	BM-SB-5645
33326768790 (-)	BM-SB-5645
33326769020	BM-TC-12542
33326769020 (-)	BM-SB-12543
33326769023	BM-TC-12542
33326769023 (-)	BM-SB-12543
33326770824	BM-SB-4495
33326770969	BM-TC-10487
33326770970	BM-TC-10488
33326770985	BM-BJ-8777
33326774476	BM-TC-10491
33326774796 (-)	BM-SB-2427
33326775552	BM-SB-5625
33326775683	BM-TC-10460
33326775902 (-)	BM-SB-10461
33329058821	BM-SB-5344
33503414297	BM-LS-3858
33506772789	BM-LS-1890
33506772789	BM-LS-5609
33506781133	BM-LS-1890

...MINI	MOOG
33506781133	BM-LS-5609
33506781538	BM-LS-8774
33506862865	BM-LS-14888
33509803515	BM-LS-13449
33509803516	BM-LS-13450
33521091710	BM-SB-9529
33521092362	BM-SB-9562
33521094091	BM-SB-9525
33521097272	BM-SB-9546
33521128819	BM-SB-9564
33521132270	BM-SB-9557
33526754123	BM-SB-9533
33536765584	BM-SB-6855
33551091497	BM-DS-4365
33551092292	BM-LS-0485
33551093663	BM-SB-7913
33551094619	BM-LS-0433
33551096735	BM-LS-2117
33551096893	BM-SB-13494
33551124375	BM-LS-1151
33551129700	BM-SB-6756
33551131155	BM-SB-6762
33551135307	BM-LS-1787
33551136491	BM-SB-6738
33551138104	BM-SB-6804
33551507999	BM-LS-1890
33552283743	BM-LS-8778
33556753770	BM-LS-3967
33556754823	BM-SB-12541
33556756151	BM-SB-7216
33556761000	BM-LS-3690
33556761002	BM-SB-6856
33556764428	BM-LS-3743
33556764428 (-)	BM-SB-8981
33556771937	BM-LS-7313
33556772788	BM-SB-13385
33556777635	BM-LS-8845
33556786429	BM-LS-10438
37106775189	BM-LS-8846
37116771929	BM-LS-7314
37116771930	BM-LS-7315

MITSUBISHI	MOOG
3345796	K150153
4010 A037 (-)	MI-SB-8434
4010 A038 (-)	MI-SB-8434
4010A013	MI-WP-10873
4010A014	MI-WP-10874
4010A015	MI-BJ-7231
4010A029	MI-BJ-7231
4010A099	MI-BJ-7231
4010A103	MI-WP-10873
4010A104	MI-WP-10874
4010A117	MI-WP-10873
4010A118	MI-WP-10874
4010A137	MI-BJ-7231

...MITSUBISHI	MOOG
4013A0010	CI-BJ-10658
4013A009	CI-BJ-10658
4013A009	PE-SB-7429
4013A009	PE-SB-7430
4013A009	PE-WP-7427
4013A010	PE-SB-7429
4013A010	PE-SB-7430
4013A010	PE-WP-7428
4013A087	MI-WP-10875
4013A088	MI-WP-10876
4013A090	MI-BJ-7232
4013A098	MI-BJ-7232
4013A135	ME-WP-5151
4013A135S1	ME-BJ-5150
4013A136	ME-WP-5152
4013A136S1	ME-BJ-5150
4013A150	ME-WP-5152
4013A150S1	ME-BJ-5150
4013A211	MI-BJ-7232
4013A255	MI-TC-7310
4013A256	MI-TC-7311
4013A273	MI-TC-7310
4013A274	MI-TC-7311
4013A281	PE-SB-7429
4013A281	PE-SB-7430
4013A281	PE-WP-7427
4013A282	PE-SB-7429
4013A282	PE-SB-7430
4013A282	PE-WP-7428
4013A314	MI-BJ-7232
4013A329	MI-WP-10875
4013A330	MI-WP-10876
4013A363	MI-WP-10875
4013A364	MI-WP-10876
4013A395	PE-SB-7430
4013A403	MI-TC-7310
4013A404	MI-TC-7311
4013A426	PE-SB-7430
4056A012	MI-LS-2385
4056A013	MI-LS-2765
4056A014	MI-LS-2768
4056A015	HY-LS-2233
4056A019	HY-LS-2616
4056A021	MI-LS-8429
4056A026	MI-LS-1615
4056A037	MI-LS-7383
4056A038	MI-LS-2376
4056A052	FD-LS-0122
4056A079	CI-SB-7938
4056A105	MI-LS-4703
4056A106	MI-LS-4702
4056A111	MI-LS-5076
4056A112	MI-LS-5077
4056A133	MI-LS-9093
4056A134	MI-LS-9094
4056A161	MI-LS-7309

...MITSUBISHI	MOOG
4117A007	MI-TC-10631
4120A125	CI-SB-13517
4156A014	PE-LS-7423
4156A041	MI-SB-10893
4410A173	MI-AX-8352
4422A009	MI-ES-10871
4422A009	MI-ES-4885
4422A010	MI-ES-10872
4422A010	MI-ES-4886
4422A012	PE-AX-7426
4422A018	PE-ES-7414
4422A028	HY-ES-1657
4422A028	MI-ES-2937
4422A036	MI-AX-8439
4422A037	MI-ES-8437
4422A038	MI-ES-8438
4422A052	MI-ES-10840
4422A052	PE-ES-7414
4422A056	MI-AX-7305
4422A058	PE-AX-13279
4422A076	PE-AX-13279
4422A078	MI-AX-7305
4422A097	MI-ES-10872
454301907	ME-WP-5151
4543200010	ME-LS-2078
4543300707	ME-WP-5151
4543300807	ME-WP-5152
4543302607	ME-WP-5152
4553597201	K150053
517258	CI-SB-7939
5483017010	HY-LS-1833
5483017020	HY-LS-2233
5483025010	HY-LS-1833
5483025020	HY-LS-2233
5681011000	MI-ES-2194
56872037010	HY-ES-0172
598018	MI-TC-1628
AW311699	MI-BJ-10371
FSK6822	MI-SB-5489
HB212100	HY-BJ-1658
HB212200	HY-BJ-1658
M884359	VV-LS-1432
MA159614	MI-ES-2194
MA159984	MI-ES-2194
MA169614	MI-ES-2194
MB 109 662	MI-SB-5490
MB006314	MI-ES-2171
MB006358	MI-ES-2171
MB076003	MI-ES-2197
MB076004	MI-ES-2198
MB076531	MI-ES-2171
MB076663	MI-ES-2197
MB076664	MI-ES-2198
MB109684	MI-SB-5489
MB122779	MI-ES-2197
MB122781	MI-ES-2194

...MITSUBISHI	MOOG
MB122782	MI-ES-2194
MB15629	MI-ES-2171
MB166426	MI-ES-2171
MB166980	MI-ES-2197
MB166982	MI-ES-2194
MB175812	MI-BJ-10362
MB176273	MI-BJ-10362
MB176283	MI-BJ-10362
MB176308	MI-BJ-10384
MB176309	MI-BJ-10377
MB185441	MI-ES-2171
MB185477	MI-LS-2451
MB192499	HY-ES-0172
MB241155	MI-BJ-10377
MB241156	MI-BJ-10377
MB241171	MI-ES-2246
MB241172	MI-ES-2171
MB241206	MI-ES-2245
MB241423	MI-PA-4402
MB241818	MI-BJ-10362
MB241883	MI-BJ-10371
MB241974	MI-LS-2451
MB242358	MI-SB-9934
MB243425A	HY-DS-1771
MB266152	MI-AX-0620
MB266165	K150056
MB266166	K150056
MB267876	MI-LS-4703
MB267877	MI-LS-4702
MB303374	MI-BJ-10371
MB303375	MI-BJ-10371
MB315160	MI-AX-0620
MB315629	MI-ES-2171
MB315775	MI-ES-2246
MB315776	MI-ES-2245
MB338594	MI-SB-10756
MB338618	MI-SB-9934
MB338620	MI-SB-9934
MB347364	K150053
MB347365	K150053
MB347599	MI-ES-3044
MB349475	MI-BJ-10377
MB349575	MI-BJ-10377
MB349963	MI-BJ-10371
MB349964	MI-BJ-10371
MB350577	MI-AX-0620
MB350581	K150055
MB378701	MI-ES-2197
MB378702	MI-ES-2198
MB378704	MI-ES-2194
MB403872	MI-AX-1299
MB430350	MI-BJ-10371
MB430351	MI-BJ-10371
MB501711	K150055
MB501721	MI-AX-3106
MB515578	MI-SB-9934

...MITSUBISHI	MOOG
MB515579	MI-SB-9934
MB518041	MI-BJ-10371
MB518042	MI-BJ-10371
MB518205	MI-BJ-10371
MB518206	MI-BJ-10371
MB518712	MI-BJ-10371
MB518713	MI-BJ-10371
MB518780	MI-LS-2376
MB518781	MI-LS-2376
MB518806	MI-WP-1766
MB518807	MI-WP-1767
MB518892	MI-LS-2768
MB518960	MI-BJ-10371
MB518961	MI-BJ-10371
MB527169	MI-ES-2937
MB527349	HY-BJ-1214
MB527350	HY-BJ-1214
MB527351	MI-BJ-4914
MB527352	HY-BJ-1658
MB527352	MI-BJ-4915
MB527383	MI-BJ-0350
MB527383	MI-TC-1628
MB52738301	MI-BJ-0350
MB527384	MI-TC-1677
MB52738401	MI-BJ-0350
MB5273849	HY-BJ-1214
MB527385	MI-LS-7403
MB5273850	HY-BJ-1214
MB52751101	MI-BJ-4865
MB527530	HY-BJ-1214
MB527650	MI-ES-2937
MB527650	MI-ES-3044
MB532281	MI-AX-3106
MB532657	MI-AX-0620
MB553249	MI-AX-2936
MB564991	HY-ES-0172
MB573043	MI-LS-2768
MB573540	MI-LS-2376
MB576093	MI-BJ-10371
MB576094	MI-BJ-10371
MB597605	MI-ES-2937
MB598017	MI-TC-1677
MB598018	MI-TC-1628
MB598023	MI-ES-2937
MB598098	MI-LS-8427
MB616026	K150056
MB616027	K150056
MB631890	HY-LS-2616
MB633021	HY-SB-9782
MB633870	MI-SB-5489
MB633926	MI-LS-7245
MB672370	MI-LS-2385
MB808076	MI-LS-2765
MB808909	VV-SB-3632
MB808910	VV-SB-3630
MB809220	MI-WP-2769

...MITSUBISHI MOOG

MB809220 (-)	MI-SB-8113
MB809220 (-)	MI-SB-8114
MB809221	MI-WP-2770
MB809221 (-)	MI-SB-8113
MB809221 (-)	MI-SB-8114
MB809222	MI-TC-10857
MB809223	MI-TC-10858
MB809354	MI-LS-2268
MB831037	MI-BJ-104248
MB831038	MI-BJ-104247
MB831040	MI-PA-190160
MB831042	MI-PA-0479
MB831043	MI-ES-0176
MB831044	MI-ES-0682
MB860817	MI-BJ-10371
MB860818	MI-BJ-10371
MB860829	MI-BJ-104249
MB860830	MI-BJ-104249
MB864164	MI-ES-2937
MB864164	MI-ES-3044
MB871748	MI-SB-9934
MB871748	MI-SB-9936
MB879354	MI-LS-8429
MB892981	MI-LS-1615
MB892982	MI-LS-2768
MB907115	MI-WP-0408
MB907116	MI-WP-0407
MB907163	MI-WP-0408
MB907164	MI-WP-0407
MB907165	MI-WP-0408
MB907166	MI-WP-0407
MB910842	MI-TC-10857
MB910887	MI-SB-9936
MB910889	MI-SB-9936
MB910890	MI-SB-9936
MB910934	MI-AX-3325
MB910961	MI-AX-3325
MB912076	MI-ES-2937
MB912077	MI-WP-0408
MB912078	MI-WP-0407
MB912505	MI-WP-1269
MB912506	MI-WP-1261
MB912511	MI-WP-2766
MB912512	MI-SB-3945
MB912512	MI-SB-9592
MB912512	MI-WP-2767
MB912519	HY-ES-0172
MB949343	MI-AX-1299
MN100110	MI-SB-13781
MN100250	MI-SB-10886
MN101368	PE-LS-7425
MN101372	MI-SB-10969
MN133617	VV-WP-1093
MN133618	VV-WP-1094
MN184133	PE-SB-7430
MN184194	PE-LS-7424

...MITSUBISHI MOOG

MN186124	ME-ES-2079
MN186217	ME-WP-5151
MN186217 (-)	ME-SB-5153
MN186217 (-)	ME-SB-5154
MN186217S1	ME-BJ-5150
MN186218	ME-WP-5152
MN186218 (-)	ME-SB-5153
MN186218 (-)	ME-SB-5154
MN186218S1	ME-BJ-5150
MR102063	VV-SB-10105
MR130479 (-)	MI-SB-14632
MR130479 (-)	MI-SB-14633
MR130480 (-)	MI-SB-14632
MR130480 (-)	MI-SB-14633
MR130807	MI-AX-3325
MR131420	MI-SB-9924
MR131680	VV-LS-0014
MR131732	HY-LS-2616
MR132551	MI-LS-7243
MR132552	MI-LS-7244
MR150767	MI-SB-13333
MR151326	MI-SB-12549
MR151327	MI-SB-14735
MR162581	MI-WP-2766
MR162582	MI-WP-2767
MR162583	MI-WP-2766
MR162584	MI-WP-2767
MR162803	MI-WP-1269
MR162804	MI-WP-1261
MR171441	MI-SB-6722
MR178817	HY-BJ-1214
MR179479	VV-WP-1093
MR179480	VV-WP-1094
MR241025	MI-WP-10867
MR241026	MI-WP-10868
MR241031	MI-ES-8961
MR241341	MI-WP-2345
MR241342	MI-WP-2346
MR241349	MI-LS-7309
MR241623	HY-BJ-1214
MR244901	VV-AX-0027
MR244902	K150160
MR267649	MI-SB-12549
MR267684	MI-SB-10756
MR267876	MI-LS-7243
MR267877	MI-LS-7244
MR267877 (-)	MI-SB-8112
MR267879 (-)	MI-SB-8112
MR272116	VV-LS-0014
MR272117	MI-LS-2268
MR272118	VV-LS-1432
MR272118S1	VV-LS-1432
MR296027	MI-WP-10867
MR296028	MI-WP-10868
MR296269	MI-BJ-104248
MR296270	MI-BJ-104247

...MITSUBISHI MOOG

MR296274	MI-ES-2245
MR296275	MI-ES-0176
MR296287	MI-WP-2766
MR296288	MI-WP-2767
MR296289	MI-WP-2766
MR296319	MI-WP-2766
MR296320	MI-WP-2767
MR297241	MI-WP-2772
MR297242	MI-WP-2775
MR297969	MI-AX-3325
MR316368	HY-LS-2233
MR333166	MI-AX-1299
MR338620	MI-SB-9936
MR344624	MI-LS-8427
MR353211	MI-SB-9932
MR369122	K150055
MR374521	MI-LS-4702
MR374522	MI-LS-4703
MR374546	MI-SB-9932
MR374547	MI-SB-9932
MR392730	MI-LS-2451
MR403027	MI-AX-2771
MR403419	MI-BJ-7385
MR403419	MI-TC-7310
MR403419 (-)	MI-SB-10892
MR403420	MI-BJ-7385
MR403420	MI-TC-7311
MR403420 (-)	MI-SB-10892
MR403771	MI-LS-7383
MR403872	MI-AX-1299
MR418052	MI-LS-5076
MR418053	MI-LS-5077
MR448255	MI-AX-4854
MR455091	MI-AX-8441
MR455092	MI-AX-8440
MR455093	K150255
MR455185	MI-SB-9936
MR455493	MI-SB-9932
MR476457	HY-ES-1657
MR476457	MI-ES-2937
MR485672	HY-ES-1657
MR485672	MI-ES-2937
MR491345	MI-WP-2769
MR491346	MI-WP-2770
MR491347	MI-TC-10857
MR491348	MI-TC-10858
MR491358	MI-AX-7305
MR496792	MI-BJ-7231
MR496799	MI-BJ-7232
MR508130	MI-BJ-7233
MR508135	MI-ES-10871
MR508135	MI-ES-4885
MR508136	MI-ES-10872
MR508136	MI-ES-4886
MR510267	MI-AX-4444
MR510271	K150156

...MITSUBISHI MOOG

MR510272	K150156
MR586053	MI-LS-8427
MR589637	MI-SB-14099
MR594282	MI-SB-10891
MR594674	MI-AX-1299
MR633926	MI-LS-7245
MR831053	MI-ES-0176
MR911569	MI-WP-2775
MR911569 (-)	MI-BJ-8860
MR911570	MI-WP-2772
MR911570 (-)	MI-BJ-8860
MR915769	VV-WP-1093
MR915770	VV-WP-1094
MR916133	MI-WP-2772
MR916134	MI-WP-2775
MR954887	MI-LS-7309
MR954888	MI-LS-2451
MR961477	ME-LS-2078
MR977606	ME-ES-2079
MR992191	MI-LS-9093
MR992192	MI-LS-9094
MR992256	MI-SB-10870
MR992309	MI-LS-8959
MR992310	MI-LS-8960
MT142181	MI-ES-2171
PW521020	MI-LS-3328
ZB212100	HY-BJ-1658

NISSAN MOOG

1954821	FD-LS-4064
271601	K150039
4011000QAA	RE-BJ-7906
4011000QAB	RE-BJ-7906
4011001G00	NI-BJ-10389
4011001G25	NI-BJ-10389
4011001G26	NI-BJ-10389
40110-01G27	NI-BJ-10389
401100F000	NI-BJ-10389
40110B9500	NI-BJ-10389
40110E0100	NI-BJ-10389
40110F1700	NI-BJ-10389
40110T3060	NI-BJ-10389
40110T6000	NI-BJ-10389
40110T6025	NI-BJ-10389
40110V0100	NI-BJ-10389
4016000001	NI-BJ-0311
40160000AC	RE-BJ-1040
40160000AD	RE-BJ-1040
4016000Q0A	RE-BJ-7762
4016000Q0B	RE-BJ-7905
4016000QAB	RE-BJ-2098
4016000QAC	RE-BJ-1040
4016000QAD	RE-BJ-1040
4016001E25	NI-BJ-10418
401600F000	NI-BJ-10423
401600M010	NI-BJ-0311

...NISSAN	MOOG
401600M020	NI-BJ-0311
401601G90	NI-BJ-0612
401602S601	NI-BJ-10804
401602Y000	NI-BJ-2309
401604F100	NI-BJ-1256
401604M400	NI-BJ-2783
401604M410	NI-BJ-2783
401604M411	NI-BJ-2783
4016050A00	NI-BJ-104145
4016050J25	NI-BJ-104145
4016050W00	NI-BJ-10423
4016050W01	NI-BJ-10423
4016050W10	NI-BJ-10423
4016050W25	NI-BJ-10423
4016050Y00	NI-BJ-0311
4016050Y02	NI-BJ-0311
4016050Y0R	NI-BJ-0311
4016050Y10	NI-BJ-0311
4016050Y20	NI-BJ-0311
4016052Y00	NI-BJ-0311
4016052Y10	NI-BJ-0311
4016052Y20	NI-BJ-0311
4016052Y60	NI-BJ-0311
4016060Y00	NI-BJ-0311
4016060Y10	NI-BJ-0311
4016060Y20	NI-BJ-0311
4016060Y60	NI-BJ-104145
4016069C00	NI-BJ-104145
4016069Y00	NI-BJ-0311
4016069Y10	NI-BJ-0311
4016069Y20	NI-BJ-0311
4016070J00	NI-BJ-10418
401607F000	NI-BJ-10930
4016085E00	NI-BJ-10418
4016086M00	NI-BJ-104145
4016093G00	NI-BJ-10423
4016093G25	NI-BJ-10423
4016093G26	NI-BJ-10423
401609C500	NI-BJ-5200
40160AX000	NI-BJ-2792
40160F4200	NI-BJ-0311
40160J7500	NI-BJ-104145
40160Y02G0	NI-BJ-0311
4016150W01	NI-BJ-10423
4016152Y10	NI-BJ-0311
401619C500	NI-BJ-5199
41174 (-)	NI-SB-2807
41175 (-)	NI-SB-2807
42420M68K00	NI-LS-9056
42431M68K00	NI-SB-12581
44 08 905	OP-SB-8083
4419291	OP-LS-10475
4419304	OP-LS-10476
4420954	OP-LS-12602
4500094	RE-SB-3846
4500095	RE-SB-3845

...NISSAN	MOOG
45201M68K00 (-)	NI-SB-10708
45202M68K00 (-)	NI-SB-10708
452614F702	NI-LS-0766
454524EB30A (-)	NI-SB-8454
45530M68K00	NI-SB-10707
4554068K00	NI-SB-10708
48001JD900 (-)	NI-AX-7337
4820300QAA	K150134
482030E025	K150098
482030E025	K150104
4820310V00	K150058
4820310V25	K150058
4820341B27	K150098
4820341B27	K150105
482034M525	K150244
482034M525	K150248
482034M526	K150244
482034M526	K150248
4820350Y00	K150097
4820350Y25	K150097
4820350Y26	K150097
4820353Y01	K150097
4820353Y25	K150097
482036F610	K150203
482039C000	K150033
482039C001	K150033
48203AV600	K150243
48203AX600	K150245
48203BM400	K150243
48203Q9025	K150039
482044U125	K150244
482044U126	K150244
4820453Y01	K150097
4820453Y25	K150097
482048H325	K150248
48211M225	NI-AX-1603
48211M255	NI-AX-1603
4851001N25	NI-DS-4949
4851031G25	NI-DS-2386
485104A00C	NI-AX-9063
485107F000	NI-DS-2386
4852000Q0E	OP-ES-10120
4852000Q0F	OP-ES-10119
4852000QAH	RE-ES-0809
4852000QAJ	RE-ES-0810
4852000QAK	RE-ES-0853
4852000QAL	RE-ES-0852
4852000QAM	NI-AX-2219
4852000QAM	OP-RK-15060
4852000QAN	RE-ES-0672
4852000QAP	RE-ES-0673
4852001B25	NI-ES-2608
4852001E25	NI-ES-2814
4852001E26	NI-ES-2814
4852001G25	NI-ES-3052
4852001N25	NI-ES-0757

...NISSAN	MOOG
4852002E00	NI-ES-2814
4852002E25	NI-ES-2814
4852002E26	NI-ES-2814
485200780R	OP-ES-10120
485200C025	NI-AX-2809
485200C025	NI-ES-2780
485200M025	NI-ES-0310
485200M025	NI-ES-1254
485200M025	NI-ES-2814
485200M085	NI-ES-2780
485200P725	NI-ES-2801
485200W025	NI-ES-2801
4852015U25	NI-ES-2780
4852015U26	NI-ES-2780
4852017B25	NI-ES-2608
485202S420	NI-ES-10902
485202S485	NI-ES-10902
4852031G25	NI-ES-3002
4852035F25	NI-ES-2814
485203S525	NI-ES-2801
4852041W00	NI-ES-3052
485204A00B	SZ-ES-8478
485204B000	NI-ES-2814
485204F125	NI-ES-1258
4852050A00	NI-ES-2814
4852050A25	NI-ES-2814
4852050A26	NI-ES-2814
4852050Y25	NI-ES-0310
4852050Y25	NI-ES-2814
4852060Y25	NI-ES-2780
485206730R	OP-ES-10119
485206F625	NI-ES-1258
4852071L25	NI-ES-2780
4852072Y25	NI-ES-1254
4852073J25	NI-ES-1254
4852073J35	NI-ES-1254
485207F000	NI-ES-3002
485207F001	NI-ES-3051
485209C000	NI-ES-1254
485209C025	NI-ES-1254
48520A0600	NI-ES-0487
48520AX600	NI-ES-2791
48520AX602	RE-ES-0673
48520BM425	NI-ES-2777
48520CB025	NI-ES-4957
48520EA01J	NI-ES-4924
48520G2525	NI-ES-0483
48520G5101	NI-ES-0185
48520G5125	NI-ES-0185
48520OP725	NI-ES-2801
48520Q9000	NI-ES-2814
48520U0100	NI-ES-0483
4852100Q0B	RE-AX-2097
4852100Q0E	OP-AX-10118
4852100Q0ESK	OP-AX-10118
4852100QAA	RE-AX-3851

...NISSAN	MOOG
4852100QAA	RE-RK-15025
4852100QAA	RE-RK-15026
4852100QAF	RE-AX-2097
4852100QAG	RE-AX-0589
4852100QAG	RE-RK-15024
4852101B25	NI-AX-1829
4852101G25	NI-ES-2473
4852101N25	NI-ES-0757
4852101W00	NI-ES-2473
485210C005	NI-AX-2809
485210C025	NI-AX-2809
4852117B00	NI-AX-1829
4852117B25	NI-AX-1829
485211M210	NI-AX-1603
485211M225	NI-AX-1603
485211M226	NI-AX-1603
485211M255	NI-AX-1603
485211M256	NI-AX-1603
485212S485	NI-ES-10903
4852131G25	NI-ES-3051
4852135F00	NI-AX-1689
485213U025	NI-AX-8456
4852140U01	NI-AX-2809
4852140U25	NI-AX-2809
4852140U26	NI-AX-2809
485214M500	NI-AX-2782
485214M527	NI-AX-2782
485214M528	NI-AX-2782
485214M587	NI-AX-2782
485214M588	NI-AX-2782
485214U000	NI-AX-2304
485214U085	NI-AX-2304
4852150400	NI-AX-1268
4852150Y00	NI-AX-1268
4852150Y25	NI-AX-1268
4852150Y26	NI-AX-1268
485215Y085	NI-AX-7248
4852170A00	NI-AX-1689
4852170A06	NI-AX-1689
4852170A16	NI-AX-1689
485218H300	NI-AX-4259
485218H325	NI-AX-4259
485218H385	NI-AX-4259
48521A03G0	NI-AX-1689
48521A0600	NI-ES-0489
48521CB025	NI-AX-4852
48521CB026	NI-AX-4852
48521CB027	NI-AX-4852
48521D0100	NI-AX-1689
48521EA000	NI-AX-4923
48521G5101	NI-ES-0201
48521G5125	NI-ES-0201
48521U0100	NI-ES-0489
48521Y02G0	NI-AX-1268
485271U61A	NI-ES-5643
48527JD01A	NI-ES-7226

...NISSAN	MOOG
4853031G25	NI-PA-19068
485603S525	NI-DL-4948
4857031G25	NI-ES-3051
485703S525	NI-ES-10904
4857061G25	NI-ES-1757
486271U61A	NI-ES-5642
4863001N25	NI-DS-4949
4863031G25	NI-DS-2386
4864001N25	NI-ES-0757
4864031C00	NI-ES-0185
48640A0600	NI-ES-0483
48640A0600	NI-ES-0487
48640A0600	NI-ES-0483
48640AX600	NI-ES-2790
48640AX602	RE-ES-0672
48640EA01J	NI-ES-4924
48640EA01J	NI-ES-4925
48640G2525	NI-ES-0487
48640U0100	NI-ES-0487
48640W0100	NI-ES-0487
48641A0600	NI-ES-0489
48641G2525	NI-ES-0489
48641G5101	NI-ES-0200
48641G5125	NI-ES-0200
48641U0100	NI-ES-0489
486471U61A	NI-ES-5642
486471U61A	NI-ES-5643
48647JD01A	NI-ES-7225
4881063J00	SZ-ES-8478
48830M68K00	NI-AX-9063
49001BA210	NI-AX-2797
49001BA210SK	NI-AX-2797
5016050W10	NI-BJ-10423
5432000QAA	NI-SB-9966
543204M800	NI-SB-9945
5432050Y12	NI-SB-9948
5432089	NI-SB-9969
54320AU701	NI-SB-9957
54320JG01B	NI-SB-10079
54321JG01B	NI-SB-10078
5432531U01	NI-SB-9949
543A00300R	RE-SB-9992
54401AV60A	NI-WP-2795
5442300QAA	RE-SB-3845
544234A00B	NI-SB-10707
5445000QAA	OP-SB-8748
5447641B02	NI-SB-0776
5447941B02	NI-SB-0776
54500 1HA0C (-)	NI-BJ-13545
54500 1HA5A (-)	NI-BJ-13545
54500 1HA5D (-)	NI-BJ-13545
54500 1HA6A (-)	NI-BJ-13545
5450000Q0C	RE-WP-1053
5450000Q0E	OP-TC-8750
5450000Q0M	RE-WP-0338
5450000Q1A	RE-WP-0338

...NISSAN	MOOG
5450000QAC	RE-WP-1053
5450000QAD	RE-WP-1053
5450000QAE	RE-WP-1053
5450000QAH	RE-WP-0338
545000M010	NI-WP-2245
545000M020	NI-WP-2245
545000M060	NI-WP-2245
545001HA0C	NI-WP-13362
545001HA0C (-)	NI-SB-14559
545001HA0C (-)	NI-SB-14560
545001HA5A	NI-WP-13362
545001HA5D	NI-WP-13362
545001HA6A	NI-WP-13362
545001KA0A	NI-WP-10630
545001KA0B	NI-WP-10630
545001KA0B (-)	NI-BJ-10627
545001KA0B (-)	NI-SB-10628
545002F500	NI-WP-0989
545002F900	NI-SB-1372
545004EA0B	NI-WP-15274
545004F102	NI-BJ-1256
545004F102	NI-WP-0326
545004F105	NI-WP-0326
545004M400	NI-WP-3229
545004M410	NI-WP-3229
545004U002	NI-WP-2306
545004U012	NI-WP-2306
545004U201	NI-WP-2306
5450052Y10	NI-WP-0559
5450052Y10	NI-WP-0560
5450052Y15	NI-WP-0559
5450052Y15	NI-WP-0560
5450052Y60	NI-WP-0559
5450052Y70	NI-WP-0559
545005U300	NI-WP-2306
5450069Y10	NI-WP-0559
5450069Y10	NI-WP-0560
545006F600	NI-WP-6590
545006F600 (-)	NI-BJ-6591
545007C350	NI-WP-7250
5450086J00	NI-WP-0180
545008H310	NI-WP-2803
545008H310 (-)	NI-SB-2808
5450090J10	NI-WP-0180
545009C550	NI-WP-7250
54500AV600	NI-WP-2796
54500AV605	NI-WP-2796
54500AV606	NI-WP-2796
54500AV606 (-)	NI-BJ-4841
54500AV60A	NI-WP-2796
54500AV60C	NI-WP-2796
54500AX600	NI-WP-2789
54500AX600	RE-WP-2102
54500AX60B	NI-WP-2789
54500BB00A	NI-WP-7230
54500BC41A	NI-WP-2789

...NISSAN	MOOG
54500BC42A	NI-WP-2789
54500BM400	NI-WP-3229
54500BM410	NI-WP-3229
54500BM410 (-)	NI-SB-2784
54500BM410 (-)	NI-SB-2786
54500BR30A	NI-WP-7230
54500BU000	NI-WP-2306
54500CC40A (-)	NI-BJ-4954
54500EB300	NI-WP-8452
54500EB300 (-)	NI-BJ-4926
54500EB31A	NI-WP-8452
54500EB31A (-)	NI-SB-8455
54500EL000	NI-WP-13314
54500F4300	NI-WP-2245
54500JD000	NI-WP-7230
54500JD000 (-)	NI-BJ-4954
54500JD000 (-)	NI-SB-8909
54500JD000 (-)	NI-SB-8910
54500JG000	NI-WP-7230
54500JG00A	NI-WP-7230
54500JG00B	NI-WP-7230
54500JY00A	NI-WP-7230
54501 1HA0C (-)	NI-BJ-13545
54501 1HA5A (-)	NI-BJ-13545
54501 1HA5D (-)	NI-BJ-13545
54501 1HA6A (-)	NI-BJ-13545
5450100Q0C	RE-WP-1052
5450100Q0E	OP-TC-8749
5450100Q0G	RE-WP-0339
5450100Q0L	RE-WP-0339
5450100QAC	RE-WP-1052
5450100QAD	RE-WP-1052
5450100QAE	RE-WP-1052
5450100QAH	RE-BJ-4264
5450100QAH	RE-WP-0339
545010M010	NI-WP-2244
545010M020	NI-WP-2244
545010M060	NI-WP-2244
545011HA0C	NI-WP-13361
545011HA0C (-)	NI-SB-14559
545011HA0C (-)	NI-SB-14560
545011HA5A	NI-WP-13361
545011HA5D	NI-WP-13361
545011HA6A	NI-WP-13361
545011HA6A (-)	NI-SB-14559
545011KA0A	NI-WP-10629
545011KA0B	NI-WP-10629
545011KA0B (-)	NI-BJ-10627
545011KA0B (-)	NI-SB-10628
545011KA1B	NI-WP-10629
545012F500	NI-SB-1372
545012F500	NI-WP-0990
545012U711	NI-WP-6589
545014EA0B	NI-WP-15273
545014F102	NI-BJ-1256
545014F102	NI-WP-0327

...NISSAN	MOOG
545014F105	NI-WP-0327
545014M400	NI-WP-2781
545014M410	NI-WP-2781
545014U002	NI-WP-2305
545014U012	NI-WP-2305
545014U201	NI-WP-2305
5450152Y10	NI-WP-0560
5450152Y15	NI-WP-0560
5450152Y60	NI-WP-0560
5450152Y70	NI-WP-0560
545015U300	NI-WP-2305
5450169Y10	NI-WP-0560
545016F600	NI-WP-6589
545016F600 (-)	NI-BJ-6591
545017C350	NI-WP-7249
5450186J00	NI-WP-0181
5450186J00 (-)	NI-SB-1372
545018H310	NI-WP-2802
545018H310 (-)	NI-SB-2808
5450190J10	NI-WP-0181
545019C550	NI-WP-7249
54501AV600	NI-WP-2795
54501AV605	NI-WP-2795
54501AV605 (-)	NI-SB-2799
54501AV605 (-)	NI-SB-2800
54501AV606	NI-WP-2795
54501AV60C	NI-WP-2795
54501AX600	NI-WP-2788
54501AX60B	NI-WP-2788
54501BB00A	NI-WP-7229
54501BC41A	NI-WP-2788
54501BC42A	NI-WP-2788
54501BM400	NI-WP-2781
54501BM410	NI-WP-2781
54501BM410 (-)	NI-SB-2784
54501BM410 (-)	NI-SB-2786
54501BN300	NI-WP-2781
54501BR30A	NI-WP-7229
54501BU000	NI-WP-2305
54501CC40 A (-)	NI-BJ-4954
54501EB300	NI-WP-8453
54501EB300 (-)	NI-BJ-4926
54501EB31A	NI-WP-8453
54501EB31A (-)	NI-SB-8455
54501EL000	NI-WP-13313
54501JD000	NI-WP-7229
54501JD000 (-)	NI-SB-8909
54501JD000 (-)	NI-SB-8910
54501JG000	NI-WP-7229
54501JG00A	NI-WP-7229
54501JG00B	NI-WP-7229
54501JY00A	NI-WP-7229
5450200Q0A	NI-WP-2226
5450200Q0A	RE-BJ-2302
5450200Q0A	RE-WP-2300
5450200Q0A	RE-WP-7760

...NISSAN	MOOG
5450200Q0B	NI-WP-2226
5450200Q0B	RE-BJ-2302
5450200Q0B	RE-WP-2300
5450200Q0C	RE-WP-7760
5450200Q0D	RE-WP-7760
5450200QAA	NI-WP-2226
5450200QAA	RE-BJ-2302
5450200QAA	RE-WP-2300
5450200QAB	NI-WP-2226
5450200QAB	RE-WP-2300
545022S485	NI-TC-10910
5450300Q0A	NI-WP-2224
5450300Q0A	RE-BJ-2302
5450300Q0A	RE-WP-2301
5450300Q0A	RE-WP-7761
5450300Q0B	NI-WP-2224
5450300Q0B	RE-BJ-2302
5450300Q0B	RE-WP-2301
5450300Q0B	RE-WP-7761
5450300Q0C	RE-WP-7761
5450300Q0D	RE-WP-7761
5450300Q0E	RE-WP-7761
5450300QAA	NI-WP-2224
5450300QAA	RE-BJ-2302
5450300QAA	RE-WP-2301
5450300QAA	RE-WP-7761
5450300QAB	NI-WP-2224
5450300QAB	RE-WP-2301
5450300QAB	RE-WP-7761
545032S485	NI-TC-10909
545040445R	NI-WP-7230
545055212R	NI-WP-7229
54506B9500	NI-SB-3212
545242F010	NI-TC-0566
5452486J01	NI-TC-0566
5452486J10	NI-TC-0566
5452486J10 (-)	NI-SB-1948
5452486J10 (-)	NI-SB-1950
54524AV600	NI-TC-5206
54524AV601	NI-TC-5206
54524AV60A	NI-TC-5206
54524EB300 (-)	NI-BJ-4927
54524EB30A	NI-WP-8450
5452525EB30A (-)	NI-SB-8454
545252F010	NI-TC-0567
5452586J01	NI-TC-0567
5452586J10	NI-TC-0567
5452586J10 (-)	NI-SB-1948
5452586J10 (-)	NI-SB-1950
54525AV600	NI-TC-5205
54525AV601	NI-TC-5205
54525AV60A	NI-TC-5205
54525EB30A	NI-WP-8451
54525EB30A (-)	NI-BJ-4927
545294A00A	NI-BJ-12582
545294A00D	NI-WP-9096

...NISSAN	MOOG
545304A00D	NI-SB-10708
545304A00D	NI-WP-9095
5453501B00	NI-SB-1374
5454190J02	NI-SB-4692
5454590J00	NI-SB-4693
5456000QAB	RE-SB-1343
5456050A00	NI-SB-1826
54560AX600	NI-SB-2793
5457000QAA	RE-SB-3846
545700M020	TO-SB-1938
54570AX600	NI-SB-2794
54570BB00A	NI-SB-8910
54596-90J10 (-)	NI-SB-2303
5461290J01	NI-SB-6790
54613-00QAD	RE-SB-1166
546131253R	OP-SB-13630
546131HA0A	NI-SB-13622
546133UB0A	NI-SB-14767
546134EA0B	RE-SB-15261
546134M420	NI-SB-10897
546134Z000	NI-SB-10897
546138H318	NI-SB-12592
546138H518	NI-SB-12591
546139U000	NI-SB-10841
54613-AX602	NI-SB-14049
54613JD02A	NI-SB-14767
54613JD03A	NI-SB-10702
54613JD04A	NI-SB-13699
54613JD17A	NI-SB-14591
54613JG02A	NI-SB-14767
54614M4A00B	NI-SB-12581
5461600Q0A	RE-LS-2095
5461600Q0C	RE-LS-1058
5461600QAA	RE-SB-1167
5461600QAB	RE-LS-1058
5461600QAC	RE-LS-2095
546164A00B	NI-LS-9056
5461800Q0A	RE-LS-1059
5461800Q0C	RE-LS-1059
5461800QAA	RE-LS-1059
5461800QAB	RE-LS-1058
5461801G00	NI-LS-4282
546180E000	NI-LS-1674
546180F000	MI-LS-2776
546181AA0A	NI-LS-7228
546181AA0E	NI-LS-7228
546181FE0A	NI-LS-12697
546182F010	NI-LS-1169
5461847B01	NI-LS-1755
546184M400	NI-LS-2778
546184U000	NI-LS-2308
5461850J11	NI-LS-1169
5461850J20	NI-LS-1168
5461850Y00	NI-LS-1168
5461858Y10	NI-LS-1155
5461858Y20	NI-LS-1155

...NISSAN	MOOG
5461858Y21	NI-LS-1155
5461858Y60	NI-LS-1155
5461886J00	NI-LS-1169
5461886J25	NI-LS-1168
5461886J25	NI-LS-1169
546188H300	NI-LS-2805
5461890J11	NI-LS-1168
5461890J11	NI-LS-1169
546189C000	NI-LS-7246
546189C002	NI-LS-7247
546189U00A	NI-LS-12697
546189U00A	NI-LS-8457
546189U00A	RE-LS-2100
54618AU000	NI-LS-2798
54618AX600	RE-LS-2100
54618BA30A	NI-LS-2798
54618BC40A	RE-LS-2100
54618CA000	AMGK80256
54618CK000	AMGK80256
54618CY00A	NI-LS-10692
54618D5000	NI-LS-1168
54618D5010	NI-LS-1168
54618EA010	NI-LS-4887
54618JD00A	NI-LS-7228
54618JX00A	NI-LS-12697
54618MB40A	MI-LS-2776
546180E000	NI-LS-1674
546681AA0A	NI-LS-7227
546681AA0E	NI-LS-7227
546684U000	NI-LS-2307
546688H300	NI-LS-2804
546689C000	NI-LS-7246
54668AU000	NI-LS-2779
54668BA30A	NI-LS-2779
54668CA000	AMGK80255
54668EA010	NI-LS-4888
54668EB30A	NI-LS-4888
54668JD00A	NI-LS-7227
551208H500	NI-TC-14994
551208H505	NI-TC-14993
55120JD00B	NI-TC-15134
55120JD00B (-)	NI-SB-15132
55121JD00B	NI-TC-15133
55121JD00B (-)	NI-SB-15132
5532063J00	NI-SB-9968
55466-00QAA	OP-SB-10171
55618JD00A	NI-LS-7766
55618JY00B	NI-LS-7766
55619JD00A	NI-LS-7767
55619JY00B	NI-LS-7767
5621761L10	NI-SB-9947
562434F101	NI-SB-6789
5624393J00	NI-SB-6791
562600F001	FD-LS-4064
5626100Q0B	OP-LS-12602
562610E000	NI-LS-5735

...NISSAN	MOOG
5626147B01	NI-LS-1755
562614F702	NI-LS-0766
562614F725	NI-LS-0766
5626150J00	NI-DS-1253
562616F600	NI-LS-0766
5626186J00	NI-DS-1253
5626186J25	NI-DS-1253
5626190J01	NI-DS-1253
56261AV610	NI-LS-10160
56261AV611	NI-LS-10160
56261AW000	NI-LS-10160
56261EA500	NI-LS-8422
56261EA510	NI-LS-8421
56261EQ000	NI-LS-4067
5631500Q0B	OP-SB-13923
5631500QAA	OP-SB-15690
6000025497	K150138
6025370231	K150133
77 00 835 929	RE-SB-2834
7700301255	RE-SB-7985
7700301720	RE-SB-7985
7700302122	RE-SB-3846
7700302123	RE-SB-3845
7700302439	RE-SB-3846
7700302440	RE-SB-3845
7701 475 841	RE-AX-2103
7701 475 841	RE-RK-15066
7701207491	NI-SB-9966
7701473333	NI-AX-2219
7701473333	OP-RK-15060
7701473656	RE-AX-10820
8200049624	OP-SB-3818
8200054003	NI-WP-2224
8200054006	NI-WP-2226
8200150759	RE-SB-6847
8200183570	NI-SB-2794
8200688871	RE-TC-10093
8200688871 (-)	OP-SB-10114
8200688871 (-)	OP-SB-10117
8200688875	RE-TC-10092
8200688875 (-)	OP-SB-10114
8200688875 (-)	OP-SB-10117
8200688877	OP-BJ-12502
8200688877	OP-BJ-8965
8200750273	OP-TC-8749
8200750274	OP-TC-8750
9160394	RE-SB-3846
9160395	RE-SB-3845
D85200P725	NI-ES-2801
D852015U26	NI-ES-2780
D85201HA0A	NI-ES-12594
D85201KA0A	NI-ES-10626
D85204EA0A	NI-ES-14848
D8520CB025	NI-ES-4957
D8520EW00A	NI-ES-5643
D8520VK90A	NI-ES-2801

...NISSAN	MOOG
D8520VK91A	NI-ES-10902
D85211HA0A	NI-AX-13359
D85211HJ0A	NI-AX-13359
D85211KA0A	NI-AX-13635
D8521JD00B	NI-AX-7337
D8521JG00A	NI-AX-7337
D8521VK91A	NI-ES-10903
D8570VK90A	NI-ES-10904
D86401HA0A	NI-ES-12593
D86401KA0A	NI-ES-10625
D86404EA0A	NI-ES-14847
D8640EW00A	NI-ES-5642
D8640EW00A	NI-ES-5643
D8640JG00A	NI-ES-7225
D8E20JG00A	NI-ES-7226
D8F40JG00A	NI-ES-7225
GRG1153	K150039

OPEL	MOOG
02878013	OP-LS-2018
0322142	OP-DS-5402
0322143	OP-DS-5406
0322149	OP-AX-5392
0322150	OP-ES-5554
0322151	OP-ES-5555
0322152	OP-ES-5556
0322154	OP-ES-5557
0322155	OP-AX-5576
0322158	OP-AX-5577
0322168	OP-DS-5586
0322169	OP-DS-5587
0322171	OP-ES-5555
0322172	OP-ES-5557
0322173	OP-DS-5402
0322174	OP-DS-5406
0322175	OP-ES-5554
0322176	OP-ES-5556
0322178	OP-ES-5557
0322179	OP-ES-5589
0322180	OP-ES-5588
0322575	OP-AX-0659
0322576	OP-AX-0611
0322577	OP-AX-0611
0324038	OP-ES-5380
0324039	OP-ES-5377
0324050	OP-ES-5569
0324053	OP-ES-5562
0324054	OP-ES-5565
0324055	OP-ES-5562
0324056	OP-ES-5565
0324059	OP-ES-5589
0324060	OP-ES-5588
0324061	OP-ES-5555
0324062	OP-ES-5557
0324063	OP-ES-5579
0324066	OP-ES-0480

...OPEL	MOOG
0344525	OP-SB-9720
0350078	OP-SB-6680
0350123	OP-SB-6680
0350127	OP-SB-6676
0350130	OP-SB-6806
0350138	OP-SB-6808
0350147	OP-SB-6734
0350260	OP-LS-1994
0350261	OP-LS-0993
0350263	OP-DS-5574
0350603	OP-LS-2080
0352030	OP-WP-0211
0352042	OP-WP-0995
0352043	OP-WP-5573
0352044	OP-WP-5572
0352052	OP-TC-1956
0352063	OP-WP-0995
0352132	OP-WP-0343
0352135	OP-WP-0343
0352193	OP-WP-0069
0352300	OP-SB-1376
0352301	OP-SB-1378
0352302	OP-SB-1380
0352303	OP-SB-1382
0352341	OP-SB-1381
0352342	OP-SB-1379
0352343	OP-SB-1379
0352346	OP-SB-1376
0352347	OP-SB-1377
0352348	OP-SB-1377
0352355	OP-SB-1379
0352365	OP-SB-1385
0352457	OP-SB-1382
0352458	OP-SB-1380
0352800	OP-BJ-5583
0352803	OP-BJ-0812
0352826	OP-BJ-5559
0352827	OP-BJ-5560
0352829	OP-BJ-5583
0353561	OP-SB-4545
0402642	OP-SB-4068
0402644	OP-SB-3770
0402645	OP-SB-1624
0402935	OP-SB-4450
0402942	OP-SB-4451
0423017	OP-TC-5610
0423121	OP-SB-3621
0423302	OP-SB-3816
0423315	OP-SB-3813
0423316	OP-SB-4456
0423318	OP-SB-3816
04419308	OP-SB-13923
0444153	OP-SB-4094
0444160	OP-SB-6846
0444200	OP-SB-4089
0444325	OP-SB-7968

...OPEL	MOOG
0444336	OP-SB-7968
0817744	OP-SB-4543
0902826	K150014
10363556	OP-SB-9728
10379371	OP-SB-9728
10379730	OP-SB-9728
11042011	OP-SB-9708
12786412	OP-SB-2812
13104120	OP-LS-3815
13110418	OP-SB-8083
13110418	OP-SB-8742
13116332	OP-LS-5739
13131963	OP-SB-15682
13138151	OP-SB-0443
13219090	OP-SB-8420
13219162	OP-TC-13925
13219163	OP-TC-13926
13239222	OP-SB-10540
13251590	OP-SB-13282
13257785	OP-SB-8986
13258052	OP-LS-7446
13260666	FI-SB-5435
13267215	OP-SB-8742
13271701	OP-SB-10965
13271702	OP-SB-10964
13271996	OP-AX-7768
13272000	OP-ES-7415
13273604	OP-TC-8347
13273605	OP-TC-8348
13278358	OP-AX-10486
13281792	OP-LS-8350
13286687	OP-AX-8848
13311920	OP-SB-10842
13318344	OP-TC-13925
13318345	OP-TC-13926
13318884	OP-TC-8347
13318885	OP-TC-8348
13320276	OP-SB-10094
13332653	OP-AX-14766
13354542	OP-AX-13623
13391512	OP-LS-13414
13500663	OP-SB-10071
13503548	OP-SB-10071
15231182	OP-SB-9728
15293924	OP-BJ-4745
15829445	OP-SB-9728
1603008	OP-AX-0432
1603008	OP-RK-15058
1603008 (-)	OP-AX-0432
1603008 (-)	OP-RK-15058
1603009	OP-ES-5569
1603016	OP-AX-1894
1603016	OP-RK-15063
1603017	OP-AX-5691
1603018	OP-AX-7452
1603120	OP-BJ-5375

...OPEL	MOOG
1603121	OP-BJ-5567
1603128	OP-BJ-5393
1603161	OP-BJ-5393
1603163	OP-BJ-5567
1603164	OP-BJ-5375
1603167	OP-BJ-5567
1603187	OP-BJ-5393
1603198	OP-AX-5581
1603199	OP-AX-5581
1603202	OP-BJ-0312
1603206	OP-AX-5581
1603213	OP-AX-1230
1603213	OP-RK-15054
1603213	OP-RK-15073
1603214	OP-ES-0514
1603215	OP-ES-0514
1603216	OP-AX-1230
1603216	OP-RK-15054
1603216	OP-RK-15073
1603227	OP-ES-2081
1603228	OP-ES-2082
1603229	OP-AX-2083
1603229	OP-RK-15074
1603239	OP-AX-1893
1603240	OP-ES-1892
1603241	K150236
1603244	OP-AX-3814
1603252	OP-AX-5689
1603256	OP-AX-1230
1603256	OP-AX-2816
1603256	OP-RK-15054
1603256	OP-RK-15073
1603257	OP-ES-2819
1603258	OP-ES-2818
1603264	OP-AX-2817
1603265	OP-AX-5162
1603265	OP-AX-5163
1603266	OP-ES-2818
1603267	OP-ES-2819
1603268	OP-AX-5162
1603286	OP-ES-5579
1603287	OP-AX-4162
1603288	OP-ES-2819
1603289	OP-ES-2818
1603290	OP-AX-5689
1603302	OP-AX-1230
1603302	OP-AX-2816
1603302	OP-RK-15054
1603302	OP-RK-15073
1603303	OP-AX-4162
1603351	OP-AX-2083
1603351	OP-RK-15074
1603357	OP-AX-2817
1603358	OP-AX-5163
1603359	OP-AX-5162
1603384	OP-AX-3814

...OPEL	MOOG
1603415	OP-AX-2083
1603415	OP-RK-15074
1603416	OP-AX-3814
1603417	OP-AX-5689
1603428	OP-AX-1893
1603429	OP-AX-1894
1603429	OP-RK-15063
1603430	OP-ES-1892
1603453	OP-AX-5576
1603455	OP-ES-0480
1603456	OP-AX-4160
1603542	OP-ES-0514
1603543	OP-AX-4160
1603544	CI-ES-8975
1603544	OP-ES-4921
1603545	CI-ES-8976
1603545	OP-ES-4922
1603642	OP-AX-4162
1603643	OP-AX-1230
1603643	OP-AX-2816
1603643	OP-RK-15054
1603643	OP-RK-15073
1603645	OP-ES-5569
1603843	OP-AX-7452
1603844	OP-AX-5691
1603845	OP-AX-0432
1603845	OP-RK-15058
1609000	OP-AX-8746
1609011	OP-AX-8747
1609013	OP-ES-2818
1609026	OP-ES-7415
1609027	OP-AX-8848
1609034	OP-AX-2083
1609034	OP-RK-15074
1609045	K150040
1609073	K150040
1609076	K150072
1609087	K150089
1609095	K150086
1609096	K150171
1609109	K150191
1609121	K150220
1609137	OP-ES-13627
1609164	OP-ES-13628
1609165	K150236
1609169	OP-AX-13624
1609183	OP-AX-14766
1609184	OP-AX-13452
1609185	OP-ES-13627
1609186	OP-ES-13628
1609187	OP-AX-13623
1609202	OP-AX-13418
1609203	OP-ES-13924
1609211	OP-AX-13415
1609213	OP-AX-13418
1609456	OP-AX-4160

...OPEL	MOOG
1609457	CI-ES-8975
1609457	OP-ES-4921
1609458	OP-ES-4922
20859330	OP-SB-10071
20967947	OP-SB-10071
242000	OP-SB-9716
24413015	OP-TC-1955
24413016	OP-TC-1956
24417251	OP-LS-2080
24428002	OP-SB-3823
24428548	OP-TC-13621
24430103	OP-SB-0443
24443815	OP-SB-8745
24454477	OP-WP-2822
24454478	OP-WP-2823
24457386	OP-SB-7935
24461353	OP-LS-2821
26010029	K150014
26032286	K150089
26055220	K150171
26059295	K150191
26087567 (-)	OP-AX-0432
26087567 (-)	OP-RK-15058
26087867	OP-AX-0432
26087867	OP-RK-15058
26087868	OP-ES-5569
26110430	OP-AX-5691
302067	OP-SB-10169
302275	OP-SB-10168
302280	OP-SB-0067
302290	OP-SB-10168
308035	OP-ES-5569
310821	OP-BJ-0177
310823	OP-BJ-2040
310828	OP-BJ-0177
312503	OP-SB-9708
322002	OP-DS-5587
322003	OP-DS-5586
322004	OP-ES-5589
322005	OP-ES-5588
322078	OP-AX-5392
322079	SA-ES-4907
322080	SA-ES-4910
322125	OP-DS-5376
322126	OP-DS-3812
322140	OP-DS-5398
322142	OP-DS-5402
322143	OP-DS-5406
322145	OP-DS-5400
322147 (-)	OP-SB-8982
322148	OP-DS-5398
322149	OP-AX-5392
322150	OP-ES-5554
322151	OP-ES-5555
322152	OP-ES-5556
322154	OP-ES-5557

...OPEL	MOOG
322155	OP-AX-5576
322158	OP-AX-5577
322159	OP-DS-5587
322160	OP-DS-5586
322166	OP-DS-5584
322168	OP-DS-5586
322169	OP-DS-5587
322171	OP-ES-5555
322172	OP-ES-5557
322173	OP-DS-5402
322174	OP-DS-5406
322175	OP-ES-5554
322176	OP-ES-5556
322177	OP-ES-5555
322178	OP-ES-5557
322179	OP-ES-5589
322180	OP-ES-5588
322194	OP-DS-5587
322195	OP-DS-5586
322575	OP-AX-0659
322576	OP-AX-0611
322577	OP-AX-0611
324038	OP-ES-5380
324039	OP-ES-5377
324042	OP-ES-5569
324046	OP-ES-5555
324047	OP-ES-5557
324048	OP-ES-5554
324049	OP-ES-5556
324050	OP-ES-5569
324053	OP-ES-5562
324054	OP-ES-5565
324055	OP-ES-5562
324056	OP-ES-5565
324057	OP-ES-1501
324057	OP-ES-1502
324058	OP-ES-1501
324058	OP-ES-1502
324059	OP-ES-5589
324060	OP-ES-5588
324061	OP-ES-5555
324062	OP-ES-5557
324063	OP-ES-5579
324066	OP-ES-0480
324155	OP-ES-5588
324186	OP-AX-5581
344513	OP-SB-9710
344514	OP-SB-9710
344516	OP-SB-9710
344519	OP-SB-9708
344520	OP-SB-9710
344523	OP-SB-9722
344537	OP-SB-10084
350078	OP-SB-6680
350081	OP-SB-6681
350093	OP-SB-8962

...OPEL	MOOG
350104	OP-SB-6809
350109	OP-SB-6642
350112	OP-SB-6630
350117	OP-SB-7934
350122	OP-SB-6681
350123	OP-SB-6680
350124	OP-SB-6679
350125	OP-SB-6679
350127	OP-SB-6676
350130	OP-SB-6806
350138	OP-SB-6808
350140	OP-SB-8963
350143	OP-SB-13240
350145	OP-SB-3822
350146	OP-SB-3823
350147	OP-SB-6734
350148	OP-SB-3823
350153	OP-SB-10167
350159	OP-SB-3823
350160	OP-SB-3822
350161	OP-SB-6810
350175	FI-LS-4548
350176	OP-LS-15394
350192	OP-LS-13625
350193	OP-LS-13626
350198	FI-LS-8086
350231	OP-LS-13685
350232	OP-LS-13686
350233	OP-LS-13414
350260	OP-LS-1994
350261	OP-LS-0993
350263	OP-DS-5574
350391	OP-SB-13644
350600	OP-LS-5575
350603	OP-LS-2080
350605	OP-LS-5575
350607	OP-LS-2811
350608	OP-LS-1786
350609	OP-LS-5575
350610	OP-LS-5582
350611	OP-LS-0515
350611	OP-LS-15394
350612	OP-LS-5739
350613	OP-LS-2821
350614	OP-LS-0515
350614	OP-LS-15394
350615	OP-LS-2080
350616	FI-LS-4548
350617	OP-LS-8349
350618	OP-LS-7446
350621	OP-SB-10794
350622	OP-SB-10539
351258	OP-SB-1644
352002	OP-TC-0084
352003	OP-TC-0085
352011	OP-TC-0489

...OPEL	MOOG	...OPEL	MOOG	...OPEL	MOOG	...OPEL	MOOG
352012	OP-TC-0488	352310	OP-SB-0443	352803	OP-BJ-0812	423318	OP-SB-3816
352028	OP-WP-0568	352319	OP-SB-2812	352826	OP-BJ-5559	423319	OP-SB-6992
352029	OP-WP-0569	352320	OP-SB-0443	352827	OP-BJ-5560	423320	OP-SB-4069
352030	OP-WP-0211	352324	OP-SB-2824	352828	OP-BJ-1504	423551	OP-SB-10538
352041	OP-WP-0996	352327	OP-SB-1331	352829	OP-BJ-5583	423552	OP-SB-10540
352042	OP-WP-0995	352330	OP-SB-1375	352830	OP-BJ-5583	4242673 (-)	OP-SB-8982
352043	OP-WP-5573	352334	PE-SB-1315	352866	OP-SB-8420	4242731	OP-AX-0611
352044	OP-WP-5572	352335	OP-SB-1644	352868	OP-SB-8986	42451M76G00	OP-SB-9075
352045	OP-WP-0996	352338	OP-SB-1292	352869	OP-TC-8347	4302209	OP-BJ-1504
352046	OP-WP-0995	352341	OP-SB-1381	352870	OP-TC-8348	4401134	OP-SB-15690
352050	OP-TC-8347	352343	PE-SB-2826	352873	OP-SB-8986	4401852	RE-WP-1052
352051	OP-TC-1955	352346	OP-SB-1376	352947	FI-SB-5435	4401853	RE-WP-1053
352052	OP-TC-1956	352347	OP-SB-1377	352947	PE-SB-4963	4401909	RE-BJ-1040
352061	OP-WP-0996	352348	OP-SB-1377	353280	OP-SB-10666	4401940	RE-WP-1052
352063	OP-WP-0995	352349	PE-SB-1315	353281	OP-SB-10673	4401941	RE-WP-1053
352064	OP-WP-0996	352351	OP-SB-1376	353460	OP-SB-7416	4403641	RE-BJ-4271
352065	OP-WP-0995	352352	OP-SB-1377	353561	OP-SB-4545	4403661	PE-ES-5703
352067	OP-BJ-4870	352352	OP-SB-7957	363562	OP-SB-8744	4403661	RE-ES-4273
352071	OP-TC-8348	352355	OP-SB-1379	39001003	OP-LS-15333	4403806	RE-AX-7020
352073	OP-TC-8347	352356	OP-SB-7957	39001004	OP-LS-15334	4404047	RE-WP-1052
352074	OP-WP-0069	352357	OP-SB-1384	39008083	OP-ES-15336	4404048	RE-WP-1053
352075	OP-WP-0069	352358	OP-SB-1383	39008084	OP-ES-15335	4408252	OP-BJ-12502
352076	OP-WP-0068	352364	OP-SB-1384	4011000QAA	RE-BJ-7906	4408474	NI-AX-2219
352076	PE-TC-5038	352365	OP-SB-1385	402027	OP-SB-10842	4408474	OP-RK-15060
352077	OP-WP-0069	352366	OP-SB-0203	402538	OP-SB-13282	4408476	K150228
352080	OP-TC-8348	352377	OP-SB-0203	402642	OP-SB-4068	4408510	RE-ES-0853
352085	OP-BJ-1899	352378	OP-SB-0203	402643	OP-SB-3811	4408511	RE-ES-0852
352086	OP-BJ-1895	352380	FI-SB-5435	402644	OP-SB-3770	4408904	RE-LS-2095
352087	OP-BJ-4870	352380	PE-SB-4963	402645	OP-SB-1624	4408905	OP-SB-8083
352108	OP-SB-10570	352457	OP-SB-1382	402935	OP-SB-4450	4408958	NI-WP-2224
352110	OP-TC-10115	352458	OP-SB-1380	402942	OP-SB-4451	4408958	RE-WP-2301
352115	OP-TC-10116	352491	OP-SB-10570	402952	OP-SB-8083	4408958	RE-WP-7761
352123	OP-WP-5570	352492	OP-TC-10115	402952	OP-SB-8742	4408959	NI-WP-2226
352124	OP-WP-5571	352493	OP-TC-10116	4100255	RE-BJ-1040	4408959	RE-WP-2300
352127	OP-WP-5571	352494	OP-SB-10570	423008	OP-TC-4081	4412907	OP-SB-10171
352128	OP-WP-5570	352509	OP-TC-13453	423008 (-)	OP-SB-13378	4412934	NI-WP-2224
352132	OP-WP-0343	352510	OP-TC-13454	423010	OP-TC-10137	4412934	RE-WP-2301
352135	OP-WP-0343	352511	OP-TC-13927	423017	OP-TC-5610	4412934	RE-WP-7761
352136	OP-WP-0342	352512	OP-TC-13927	423019	OP-TC-10137	4412936	NI-WP-2226
352148	OP-WP-5571	352523	OP-WP-14710	423032	OP-TC-13621	4412936	RE-WP-2300
352162	OP-WP-5571	352523 (-)	OP-SB-14711	423032 (-)	FI-SB-15440	44163	OP-SB-15682
352163	OP-WP-0069	352523 (-)	OP-SB-14712	423032 (-)	FI-SB-15441	4417121	OP-SB-10171
352169	OP-WP-5570	352524	OP-WP-14709	423033	OP-TC-4081	4417177	RE-WP-7761
352172	OP-WP-5571	352524 (-)	OP-SB-14711	423033 (-)	OP-SB-13378	4417178	RE-WP-7760
352181	OP-TC-0085	352524 (-)	OP-SB-14712	423035	OP-TC-4081	4417971	OP-SB-8083
352182	OP-TC-0084	352530	OP-TC-10115	423035 (-)	OP-SB-13378	4417973	RE-LS-2095
352192	OP-WP-0068	352531	OP-TC-10116	423042	OP-TC-13925	4418192	RE-LS-1058
352193	OP-WP-0069	352537 (-)	FI-SB-14965	423043	OP-TC-13926	4418193	RE-LS-1059
352196	OP-WP-0568	352538 (-)	FI-SB-14965	423071	OP-TC-13926	4418212	RE-WP-1052
352197	OP-WP-0569	352542	OP-WP-3961	423072	OP-SB-10540	4418213	RE-WP-1053
3522358	OP-SB-1383	352543	OP-WP-3960	423073	OP-TC-13925	4418223	NI-WP-2224
352300	OP-SB-1376	352549	OP-TC-13453	423121	OP-SB-3621	4418223	RE-WP-2301
352301	OP-SB-1378	352550	OP-TC-13454	423302	OP-SB-3816	4418223	RE-WP-7761
352302	OP-SB-1380	352551	OP-WP-14709	423313	OP-SB-3779	4418224	NI-WP-2226
352303	OP-SB-1382	352552	OP-WP-14710	423315	OP-SB-3813	4418224	RE-WP-2300
352309	OP-SB-0203	352800	OP-BJ-5583	423316	OP-SB-4456	4418225	RE-WP-7761

...OPEL	MOOG
4418226	RE-WP-7760
4418629	OP-TC-8749
4418630	OP-TC-8750
4418631	RE-BJ-7905
4418780	RE-AX-2097
4419075	RE-BJ-2302
4419215	RE-TC-10093
4419216	RE-TC-10092
4419219	OP-BJ-12502
4419219	OP-BJ-8965
4419291	OP-LS-10475
4419304	OP-LS-10476
4420096	OP-AX-10118
4420097	OP-ES-10119
4420098	OP-ES-10120
4420954	OP-LS-12602
4421646	RE-WP-7760
4421647	RE-WP-7761
4431869	RE-BJ-7762
444081	OP-LS-8350
444091	OP-SB-10793
444153	OP-SB-4094
444160	OP-SB-6846
444162	OP-SB-8751
444199	OP-SB-4094
444200	OP-SB-4089
444201	OP-SB-4090
444275	OP-LS-3815
444288	OP-LS-2329
444289	OP-LS-2328
444291	OP-LS-6993
444325	OP-SB-7968
444335	OP-SB-13451
444336	OP-SB-7968
444347	OP-SB-4511
4453051	RE-ES-0853
4453052	RE-ES-0852
4500091	OP-SB-8748
4500092	RE-WP-1052
4500093	RE-WP-1053
4500094	RE-SB-3846
4500095	RE-SB-3845
4500198	RE-LS-1058
4500199	RE-LS-1059
4500211	OP-SB-7215
4500254	RE-BJ-2098
4500255	RE-BJ-1040
4501260	K150133
4501261	RE-AX-2097
4501262	RE-ES-0809
4501263	RE-ES-0810
4520162J00	SZ-WP-5084
4520262J00	SZ-WP-5083
4520262J00 (-)	SZ-BJ-5080
4520262J00 (-)	SZ-SB-5086
4553062J00	SZ-SB-5085

...OPEL	MOOG
4553505020	K150171
464023	OP-TC-7435
4701744	DE-ES-0639
4701744	SZ-ES-2292
4701745	OP-AX-2194
4703860	OP-SB-1386
4705172	DE-TC-0125
4705655	DE-ES-0639
4705655	SZ-ES-2292
4705716	OP-ES-3620
4705716	SZ-ES-2292
4705742	OP-TC-3619
4706664	OP-SB-1386
4706665	OP-TC-3619
4707280	OP-TC-3619
4708302	SZ-SB-5085
4709161	SZ-AX-5082
4709195	OP-ES-3620
4709195	SZ-ES-8478
4709702	SZ-LS-5081
4802543	OP-SB-8780
4802966	OP-LS-4707
4802967	OP-LS-4706
4803429	OP-ES-4746
4804642	OP-LS-7224
4806300	OP-WP-7222
4806300 (-)	OP-BJ-4745
4806301	OP-WP-7223
4806304	OP-LS-4707
4806305	OP-LS-4706
4810831	OP-WP-7222
4812870	OP-WP-7223
4817515	OP-LS-4706
4817516	OP-LS-4707
4817539	OP-LS-7224
4817776	OP-SB-8780
4817777	OP-WP-7222
4817778	OP-WP-7223
4817869	OP-SB-8780
4819611	OP-LS-4707
4819612	OP-LS-4706
485200780R	OP-ES-10120
485206730R	OP-ES-10119
485212373R	OP-AX-10118
4883063J00	SZ-AX-5082
51885735	FI-SB-14965
5352000	OP-WP-0068
5352001	OP-WP-0069
5352004	OP-WP-0211
5352005	OP-WP-0210
5352007	OP-WP-0569
5352008	OP-WP-0568
5352011	OP-TC-0489
5352012	OP-TC-0488
5352014	OP-WP-5570
5352015	OP-WP-0069

...OPEL	MOOG
5352016	OP-WP-0670
5352017	OP-WP-0671
5352018	OP-WP-0068
5352019	OP-LS-2811
5352020	OP-LS-1786
5352025	OP-BJ-1899
5352026	OP-BJ-1895
5352027	OP-WP-1903
5352028	OP-WP-1902
5352029	OP-WP-2822
5352030	OP-WP-2823
5352038	OP-WP-3960
5352039	OP-WP-3961
5402630	OP-SB-4083
5402631	OP-SB-4088
5402634	OP-SB-3770
5402636	OP-SB-8745
5402637	OP-SB-8083
5402637	OP-SB-8742
5402638	OP-SB-3770
5432000QAA	NI-SB-9966
5442300QAA	RE-SB-3845
5457000QAA	RE-SB-3846
55700751	FI-SB-5439
55700753	FI-LS-4548
55703230	OP-WP-3961
55703231	OP-WP-3960
55703232	FI-SB-5435
576242000	OP-SB-9716
6606030	OP-AX-7768
6606031	OP-ES-7415
6655341	OP-SB-7968
7700302122	RE-SB-3846
7700302123	RE-SB-3845
7700302439	RE-SB-3846
7700302440	RE-SB-3845
7701207491	NI-SB-9966
7701464313	RE-AX-4280
7848281	OP-DS-5376
8200002870	RE-LS-2095
8200049624	OP-SB-3818
8200626965	RE-SB-13812
8200688871	RE-TC-10093
8200688871 (-)	OP-SB-10114
8200688871 (-)	OP-SB-10117
8200688875	RE-TC-10092
8200688875 (-)	OP-SB-10114
8200688875 (-)	OP-SB-10117
90080552	OP-SB-4543
900905	OP-AX-3537
900906	K150189
900907	OP-ES-2814
90090811	K150002
90092805	OP-TC-7976
90105358	OP-AX-0659
90125567	OP-DS-5376

...OPEL	MOOG
90168602	OP-SB-6642
90184755	OP-SB-9716
90184756	OP-SB-9716
90188878	K150040
90216574	OP-SB-6630
90223456	OP-SB-3779
902350	OP-SB-1644
90278249	OP-SB-6681
90278577	OP-LS-0993
90278579	OP-LS-1994
902825	K150002
902826	K150014
902827	K150014
902829	K150079
90289421	OP-SB-9710
90289557	OP-SB-9716
90289915	OP-AX-0611
90304225	OP-SB-6680
90304625 (-)	OP-SB-8982
90305431	OP-SB-1624
90334925	OP-SB-3813
90335254	OP-SB-6679
90343847	OP-SB-4511
90345185	K150002
90345195	K150002
90373521 (-)	OP-SB-8982
90373523	OP-AX-0611
90398968	K150040
90442111	K150072
90445097	OP-SB-1378
90445098	OP-SB-4545
90445100	OP-SB-10673
90445101	OP-SB-10666
90445208	OP-SB-9708
90445625	OP-SB-6734
90447867	OP-SB-6680
90447868	OP-SB-6681
90447869	OP-SB-6679
90447946	OP-SB-6676
90468044	OP-TC-5610
90468554	OP-SB-9722
90468638	OP-SB-1383
90473811	OP-ES-5589
90473812	OP-ES-5588
90495045	OP-DS-5574
90496116	OP-LS-5582
90496711	OP-LS-6993
90497197	OP-TC-10137
90497198	OP-TC-10137
90498689	OP-SB-10168
90510653	OP-ES-5589
90511260	OP-TC-0085
90511261	OP-TC-0084
90512778	K150086
90538444	OP-TC-7435
90539057	OP-SB-8744

...OPEL	MOOG
9105983	K150002
9109852	RE-WP-1052
9109940	RE-WP-1052
9109941	RE-WP-1053
9111661	RE-ES-4273
9112047	RE-WP-1052
9112048	RE-WP-1053
91160037	NI-AX-2219
91160037	OP-RK-15060
91160043	RE-ES-0853
91160044	RE-ES-0852
91166461	NI-WP-2226
91166462	NI-WP-2224
91166695	OP-SB-8083
91167000	RE-LS-2095
9160392	RE-WP-1052
9160393	RE-WP-1053
9160394	RE-SB-3846
9160395	RE-SB-3845
9160511	OP-SB-7215
9160554	RE-BJ-2098
9160555	RE-BJ-1040
9161561	RE-AX-2097
9161562	RE-ES-0809
9161563	RE-ES-0810
9191188	OP-SB-3822
9193098	OP-ES-5589
9195731	OP-TC-7976
9196394	OP-BJ-0812
920007	OP-AX-10486
920008	OP-ES-7415
920011	OP-ES-13924
920355	OP-TC-7976
920368	OP-TC-7976
920373	OP-ES-1501
920373	OP-ES-1502
920374	OP-ES-1501
920374	OP-ES-1502
9210168	DE-ES-0639
9210270	OP-TC-3619
9210351	OP-ES-3620
9212530	OP-TC-3619
9214826	OP-TC-3619
9223022	OP-SB-10168
92245258	OP-SB-10071
93171448	OP-SB-2812
93172254	OP-ES-2081
93172255	OP-ES-2082
93172256	OP-AX-2083
93172256	OP-RK-15074
93175520	OP-AX-3814
93178160	OP-AX-5689
93179557	OP-AX-2816
93179557	OP-RK-15073
93179558	OP-ES-2819
93179559	OP-ES-2818

...OPEL	MOOG
93181229	OP-AX-2817
93181230	OP-AX-5163
93181232	OP-ES-2818
93181233	OP-ES-2819
93181662	OP-AX-5162
93186321	OP-ES-5579
93186330	OP-AX-4162
93186332	OP-ES-2819
93186333	OP-ES-2818
93187435	OP-AX-5689
93188808	OP-BJ-4870
93189022	OP-AX-4160
93189023	OP-ES-4921
93189024	OP-ES-4922
93190907	OP-BJ-4870
93191526	OP-AX-2816
93191526	OP-RK-15073
93191673	OP-AX-5689
93192420	OP-AX-5691
93192689	RE-WP-1052
93192690	RE-WP-1053
93194035	SZ-ES-8478
93194857	RE-BJ-7905
93195093	SZ-LS-5081
93196542	OP-ES-4922
93197233	OP-BJ-8965
93197327	OP-SB-13630
93853465	RE-WP-7760
93858901	OP-SB-8083
93858917	RE-LS-2095
94459480	OP-ES-1501
94459480	OP-ES-1502
94459481	OP-ES-1501
94459481	OP-ES-1502
95514914	OP-AX-13415
95914910	OP-ES-13924
95915222	OP-ES-13924
95942519	OP-LS-13685
95942520	OP-LS-13686
95952930	DE-AX-5752
95954754 (-)	OP-AX-7221
96129839	OP-LS-2018
96268454	OP-WP-0836
96268455	OP-WP-0833
96316765	OP-SB-1386
96380613	OP-SB-1386
96391876	OP-DS-0750
96626150	OP-LS-7224
96626247	OP-LS-4707
96626248	OP-LS-4706
96810751	OP-SB-10445
96819161 (-)	OP-SB-8779
96819161 (-)	OP-SB-8780
96819162 (-)	OP-SB-8779
96819162 (-)	OP-SB-8780
96996450	OP-LS-4707

...OPEL	MOOG
96996460	OP-LS-7224
97184820	K150189
97184821	OP-ES-2814
A4705655	SZ-ES-2292

PEUGEOT	MOOG
12613956K6578	PE-SB-1300
1300473080	FI-BJ-7531
1302368080	FI-BJ-7530
1304641080	CI-SB-7967
1305551080	PE-SB-1311
1305552080	PE-SB-1313
1308694080	PE-SB-1137
1313084080	FI-TC-8872
1316735080	FI-TC-8871
1316736080	FI-TC-8872
1317389080	FI-TC-8871
1317390080	FI-TC-8872
1317425080S	PE-LS-1048
1331640080	FI-BJ-0512
1331641080	FI-BJ-0513
1357572080	CI-LS-7321
1479759080	CI-SB-4473
1607293680	PE-AX-0860
1607301380	CI-WP-3877
1607301480	CI-WP-3876
1607510680	PE-TC-8483
1607510780	PE-TC-8482
1608025180	PE-ES-12631
1608025280	PE-ES-12632
1608025380	PE-AX-12630
1608388580	CI-SB-14829
1608532180	PE-AX-13279
1608652180	CI-AX-13643
1608652280	CI-ES-13641
1608652380	CI-ES-13642
1609910680	PE-SB-7430
1609948280	CI-ES-8465
1609948380	CI-ES-8466
1610817680	CI-AX-14830
1610817780	CI-ES-13989
1610817880	CI-ES-13990
1610976380	CI-ES-5120
1610976480	CI-ES-5119
1611242380	PE-AX-14704
1614439280	PE-BJ-3356
1614447180	PE-WP-13404
322054	PE-TC-5034
352010	CI-TC-3341
352020	CI-TC-3342
352034	CI-TC-3342
352047	PE-TC-0078
352048	PE-TC-3197
352048	PE-TC-3198
352049	PE-TC-3198
352050	PE-TC-3197

...PEUGEOT	MOOG
352050	PE-TC-3198
352051	OP-TC-1955
352054	PE-TC-5034
352057	PE-TC-3197
352060	PE-TC-3197
352064	PE-WP-0577
352065	PE-TC-0076
352067	OP-BJ-4870
352068	PE-TC-0076
352070	PE-TC-1035
352071	PE-TC-1036
352076	PE-TC-5038
352077	PE-TC-5040
352078	PE-WP-6980
352079	PE-WP-6979
352080	PE-WP-0626
352081	PE-WP-0627
352083	PE-WP-13403
352084	PE-WP-13403
352087	OP-BJ-4870
352092	PE-WP-0626
352093	PE-WP-0627
352094	FI-TC-8871
352095	FI-WP-0109
352096	FI-WP-0111
352098	PE-WP-13403
352099	PE-WP-13403
3520A1	CI-WP-13401
3520A2	CI-WP-13401
3520A3	CI-WP-13401
3520A6	PE-TC-0078
3520A7	PE-TC-0078
3520C0	PE-TC-0218
3520C0	PE-TC-8875
3520C1	CI-TC-0160
3520C2	CI-TC-0160
3520C3	FI-TC-8871
3520C5	FI-TC-8871
3520C5 (-)	PE-SB-1311
3520E9	PE-WP-13407
3520F1	PE-WP-13403
3520F3	PE-WP-13403
3520F7	CI-WP-13401
3520F8	CI-WP-13401
3520G8	PE-TC-1572
3520G8	PE-TC-3538
3520G9	FI-TC-8871
3520H1	PE-TC-0218
3520H1	PE-TC-8875
3520H3	PE-WP-13403
3520H3	PE-WP-13407
3520H4	CI-WP-0601
3520H4	PE-WP-13407
3520H5	CI-WP-0601
3520H5	CI-WP-13401
3520H5	PE-WP-13407

...PEUGEOT	MOOG
3520H6	CI-WP-0601
3520H7	PE-TC-1033
3520H9	CI-WP-0713
3520J3	CI-WP-0713
3520J9	CI-WP-0713
3520K4	PE-TC-0078
3520K6	PE-TC-1035
3520K8	PE-TC-1032
3520K9	CI-WP-0713
3520L0	FI-WP-0109
3520L0	FI-WP-3840
3520L1	CI-WP-3876
3520L1	FI-WP-0111
3520L4	CI-TC-0933
3520L7	PE-TC-3538
3520L8	PE-TC-3882
3520N3	FI-WP-3840
3520N4	CI-WP-3876
3520N4	FI-WP-0111
3520N5	CI-WP-12503
3520N6	PE-WP-3320
3520N6	PE-WP-3321
3520N7	PE-TC-5754
3520P1	CI-TC-0933
3520P1	CI-WP-12503
3520P2	PE-TC-1033
3520P4	FI-TC-8871
3520P6	CI-WP-2464
3520P7	CI-TC-10888
3520P8	FI-TC-8871
3520Q2	PE-WP-4027
3520Q2 (-)	CI-SB-4960
3520Q2 (-)	CI-SB-4961
3520Q3	CI-WP-0713
3520Q4	CI-WP-0713
3520Q5	CI-WP-0713
3520Q9	PE-WP-4741
3520R0	CI-TC-0933
3520R2	CI-TC-0933
3520R6	CI-TC-0933
3520R6	CI-WP-12503
3520R7	PE-WP-4741
3520R8	CI-TC-7298
3520R8	CI-TC-7299
3520R8	CI-TC-8419
3520R8 (-)	CI-SB-7317
3520S0 (-)	CI-SB-5125
3520S0 (-)	CI-SB-5126
3520S1 (-)	CI-SB-5125
3520S1 (-)	CI-SB-5126
3520S2	PE-TC-1032
3520S3	PE-TC-3882
3520S4	PE-TC-1572
3520S5	PE-TC-8483
3520S6	CI-TC-10887
3520S8	PE-TC-5754

...PEUGEOT	MOOG
3520S9	PE-TC-5754
3520T0	PE-TC-1032
3520T2	CI-WP-12503
3520T3	CI-WP-12503
3520T8	CI-WP-12503
3520V0	PE-SB-7429
3520V0	PE-SB-7430
3520V0	PE-WP-7427
3520V2	PE-TC-7382
3520V3	CI-WP-0713
3520V6	PE-TC-1033
3520V7	PE-TC-3882
3520V8	CI-TC-7298
3520V8	CI-TC-8419
3520W0	PE-TC-3538
3520W1	CI-TC-15533
3520W1 (-)	CI-SB-15532
3520W2	CI-TC-15535
3520W2 (-)	CI-SB-15532
3520W3	FI-WP-3959
3520W4	PE-TC-8483
3520W7	CI-WP-8761
3520X0	PE-TC-8483
3520X0 (-)	PE-SB-8484
3520X6	CI-TC-12665
3520X7	PE-TC-14719
3520X7 (-)	PE-SB-8472
3520X9	PE-SB-7429
3520X9	PE-SB-7430
3520X9	PE-WP-7427
3520Y0	PE-TC-13455
3520Y0 (-)	PE-SB-13457
3520Y4	FI-WP-3959
352100	CI-WP-0600
352100	PE-WP-13408
352120	CI-TC-3341
352131	PE-TC-3199
352133	PE-TC-3199
352134	PE-TC-3199
352137	PE-TC-5033
352138	PE-TC-3196
352141	PE-TC-3196
352145	PE-WP-0578
352146	PE-TC-0077
352149	PE-TC-0077
352152	PE-TC-5037
352153	PE-TC-5039
352155	PE-WP-13404
352156	PE-WP-13404
352164	FI-TC-8872
352164 (-)	PE-SB-1313
352165	FI-WP-0108
352166	FI-WP-0110
352168	PE-WP-13404
352172	CI-WP-13402
352173	CI-WP-13402

...PEUGEOT	MOOG
352174	CI-WP-13402
352176	PE-TC-0079
352177	PE-TC-0079
352180	PE-TC-0219
352180	PE-TC-8876
352181	CI-TC-0161
352183	FI-TC-8872
352185	FI-TC-8872
352191	CI-WP-13402
352192	CI-WP-13402
352199	PE-WP-13404
352199	PE-WP-13408
3521A1	PE-WP-13404
3521A1	PE-WP-13408
3521A2	PE-WP-13404
3521A3	PE-WP-13404
3521A7	CI-WP-13402
3521A8	CI-WP-13402
3521C0	PE-TC-0219
3521C0	PE-TC-8876
3521C8	PE-TC-1571
3521C8	PE-TC-3539
3521C9	FI-TC-8872
3521E1	PE-TC-0219
3521E1	PE-TC-8876
3521E3	PE-WP-13404
3521E3	PE-WP-13408
3521E4	CI-WP-0600
3521E4	PE-WP-13404
3521E5	CI-WP-0600
3521E5	CI-WP-13402
3521E5	PE-WP-13404
3521E5	PE-WP-13408
3521E7	PE-TC-1034
3521E9	CI-WP-0714
3521F3	CI-WP-0714
3521F9	CI-WP-0714
3521G4	PE-TC-0079
3521G6	PE-TC-1036
3521G8	PE-TC-0999
3521G9	CI-WP-0714
3521H0	CI-WP-2464
3521H0	PE-SB-1312
3521H1	CI-WP-2465
3521H1	PE-SB-1312
3521H2	FI-WP-0108
3521H2	FI-WP-0118
3521H3	CI-WP-3877
3521H3	FI-WP-0110
3521H6	CI-TC-0932
3521H9	PE-TC-3539
3521J0	PE-TC-3883
3521J1	CI-TC-0932
3521J3	FI-WP-0118
3521J4	CI-WP-3877
3521J4	FI-WP-0110

...PEUGEOT	MOOG
3521J6	PE-SB-3513
3521J6	PE-WP-3321
3521J7	PE-TC-5755
3521J0	PE-TC-3883
3521K1	CI-TC-0932
3521K2	PE-TC-1034
3521K3	PE-TC-0999
3521K4	FI-TC-8872
3521K6	CI-WP-2465
3521L0	FI-TC-8872
3521L3	PE-WP-4028
3521L3 (-)	CI-SB-4960
3521L3 (-)	CI-SB-4961
3521L4	CI-WP-0714
3521L5	CI-WP-0714
3521L6	CI-WP-0714
3521N0	PE-WP-4742
3521N1	CI-TC-0932
3521N3	CI-TC-0932
3521N7	CI-TC-0932
3521N8	PE-WP-4742
3521N9	CI-TC-7299
3521N9	CI-TC-8418
3521N9 (-)	CI-SB-7317
3521P1 (-)	CI-SB-5125
3521P1 (-)	CI-SB-5126
3521P2 (-)	CI-SB-5125
3521P2 (-)	CI-SB-5126
3521P3	PE-TC-0999
3521P4	PE-TC-3883
3521P5	PE-TC-1571
3521P5	PE-TC-3539
3521P6	PE-TC-8482
3521P9	PE-TC-5755
3521Q0	PE-TC-5755
3521Q1	PE-TC-0999
3521Q3	CI-WP-12504
3521R (-)	CI-BJ-10658
3521R1	PE-SB-7429
3521R1	PE-SB-7430
3521R1	PE-WP-7428
3521R3	PE-TC-7381
3521R4	CI-WP-0714
3521R7	PE-TC-1034
3521R9	PE-TC-3883
3521S0	CI-TC-7299
3521S0	CI-TC-8418
3521S1	PE-TC-3539
3521S4	CI-TC-15534
3521S4 (-)	CI-SB-15532
3521S5	CI-TC-15536
3521S5 (-)	CI-SB-15532
3521S6	FI-WP-3958
3521S7	PE-TC-8482
3521S9	CI-WP-8760
3521T2	PE-TC-8482

...PEUGEOT	MOOG
3521T2 (-)	PE-SB-8484
3521T7	CI-TC-12666
3521T8	PE-TC-14720
3521T8 (-)	PE-SB-8472
3521V0	PE-SB-7429
3521V0	PE-SB-7430
3521V0	PE-WP-7428
3521V1	PE-TC-13456
3521V1 (-)	PE-SB-13457
3521V5	FI-WP-3958
352314	PE-SB-1828
352320	OP-SB-0443
352320	PE-SB-1314
352323	PE-SB-1321
352331	CI-SB-1262
352340	PE-SB-1317
352342	PE-SB-1316
352343	PE-SB-2826
352349	PE-SB-1315
352350	PE-SB-1310
352351	PE-SB-1301
352352	CI-SB-1302
352353	CI-SB-1310
352354	PE-SB-1316
352360	PE-SB-1319
352361	PE-SB-1318
352362	PE-SB-1304
352364	CI-SB-1302
352371	CI-SB-1262
352375	PE-SB-1304
352376	PE-SB-1321
352376	PE-SB-2344
352377	PE-SB-1320
352378	PE-SB-1319
352379	PE-SB-3947
352380	FI-SB-5435
352380	PE-SB-4963
352383	CI-SB-0224
352389	PE-SB-1316
352391	PE-SB-0225
352392	PE-SB-1320
352393	PE-SB-1138
352394	PE-SB-1137
352398	CI-SB-0934
3523AA	CI-SB-0935
3523AG	PE-SB-2344
3523AJ	PE-SB-0225
3523AL	PE-SB-8468
3523AP	PE-SB-1137
3523AQ	PE-SB-3492
3523AS	PE-SB-3947
3523AW	PE-SB-8468
3523AZ	PE-SB-8468
3523CA	PE-SB-8469
3523CC	PE-SB-4744
3523CE	PE-SB-4743

...PEUGEOT	MOOG
3523CS	PE-SB-7430
3523EA	CI-SB-10999
3523EC	CI-SB-12604
3523EE	CI-SB-12604
3528V6	PE-TC-1033
3528W8	PE-TC-3538
352V0 (-)	CI-BJ-10658
356108	PE-SB-6835
364017	FI-BJ-4077
364018	FI-BJ-4077
364020	PE-BJ-4249
364021	PE-BJ-4249
364026	PE-BJ-4087
364028	PE-BJ-3347
364030	PE-BJ-6909
364031	PE-BJ-6909
364032	FI-BJ-7530
364033	FI-BJ-7531
364034	PE-BJ-3347
364035	PE-SB-3866
364036	PE-BJ-3356
364037	PE-BJ-6909
364038	CI-BJ-3355
364041	PE-SB-0998
364042	CI-BJ-3355
364043	CI-BJ-3355
364044	PE-BJ-6909
364048	PE-BJ-0409
364049	PE-BJ-0409
364050	CI-BJ-0523
364051	CI-BJ-0523
364053	PE-BJ-0837
364054	FI-BJ-0513
364055	FI-BJ-0512
364056	CI-BJ-0868
364057	PE-BJ-3323
364058	PE-BJ-3322
364059	PE-BJ-4501
364060	PE-BJ-0837
364061	PE-BJ-3847
364062	CI-BJ-0868
364062	PE-BJ-3847
364065	CI-BJ-0868
364066	PE-BJ-4501
364067	FI-BJ-4958
364068	PE-BJ-0837
364069	PE-BJ-13251
364070	PE-BJ-0837
364071	PE-BJ-3347
364072	PE-BJ-3322
364073	PE-BJ-0837
364074	PE-BJ-3323
364076	FI-BJ-4958
364077	CI-BJ-8795
364078	PE-BJ-15315
364083	PE-BJ-12663

...PEUGEOT	MOOG
371741	PE-ES-5723
381200	CI-AX-2467
381200	PE-AX-3327
3812000	PE-AX-3327
38120000	CI-AX-1707
38120000	CI-RK-15007
381225	CI-RK-15006
381225	CI-RK-15008
381225	CI-RK-15017
381225	CI-RK-15045
381225	PE-AX-5704
381225	PE-AX-5749
381225 (-)	PE-AX-5704
381232	PE-AX-5746
381232	PE-DS-6294
381235	PE-AX-5746
381238	PE-AX-5746
381247 (-)	PE-AX-5747
381250 (-)	PE-AX-5747
381252	PE-DS-6924
381252 (-)	PE-AX-5746
381272	PE-DS-6902
381273	PE-DS-6903
381277 (-)	PE-AX-5747
381280	CI-DS-5022
381281	CI-DS-5023
381285	PE-DS-6974
381286	PE-DS-6973
381287	PE-DS-6976
381288	PE-DS-6975
381292	PE-AX-6907
381292	PE-DS-6923
381293	PE-AX-6906
381294	CI-RK-15006
381294	CI-RK-15008
381294	CI-RK-15017
381294	CI-RK-15045
381294	PE-AX-5749
381295	PE-DS-6294
381297	PE-AX-5746
381298	PE-AX-5747
381298 (-)	PE-AX-5747
381299	PE-AX-6901
3812A0	CI-LS-1727
3812A4	CI-RK-15010
3812A4	FI-AX-1461
3812A4	PE-AX-5047
3812A6	PE-AX-3915
3812A9	PE-AX-0645
3812C0	CI-AX-3361
3812C0	CI-DS-3366
3812C0	CI-RK-15001
3812C0	CI-RK-15003
3812C0	CI-RK-15018
3812C0	CI-RK-15019
3812C1	PE-AX-0847

...PEUGEOT	MOOG
3812C3	PE-AX-0847
3812C4	PE-AX-0645
3812C4	PE-AX-0847
3812C5	PE-AX-1570
3812C5	PE-RK-15047
3812C5	PE-RK-15048
3812C6	CI-AX-1707
3812C6	CI-AX-3361
3812C6	CI-RK-15001
3812C6	CI-RK-15003
3812C6	CI-RK-15007
3812C6	CI-RK-15018
3812C6	CI-RK-15019
3812C7	PE-AX-0862
3812E0	PE-AX-0860
3812E1	CI-RK-15059
3812E1	PE-AX-2059
3812E2	CI-AX-2467
3812E5	CI-AX-3991
3812E6	PE-AX-13634
3812E7	PE-AX-3327
3812E8	PE-AX-4740
3812F0	CI-AX-5169
3812F1	PE-AX-7426
3812F2	PE-AX-7067
3812F3	CI-AX-8762
3812F4	PE-AX-7969
3812F7	PE-AX-12654
3812G3	PE-AX-12660
381709 (-)	PE-ES-5703
381710	PE-ES-5703
381710 (-)	PE-ES-5703
381711	FI-ES-4078
381714	PE-ES-5723
381716	PE-ES-5724
381718	PE-ES-5703
381718 (-)	PE-ES-5703
381721	PE-ES-5721
381722	PE-ES-5722
381726	PE-ES-5721
381727	PE-ES-5722
381730	PE-ES-5723
381731	PE-ES-5724
381732	PE-ES-0780
381733	PE-ES-0664
381734	CI-AX-0537
381735	CI-ES-1782
381736	CI-ES-0011
381737	PE-ES-1668
381738	PE-ES-1656
381739	PE-ES-0088
381740	PE-ES-0089
381741	PE-ES-5723
381742	PE-ES-5724
381743	PE-ES-1668
381744	PE-ES-1656

...PEUGEOT	MOOG	...PEUGEOT	MOOG	...PEUGEOT	MOOG	...PEUGEOT	MOOG
381747	CI-ES-3848	406615	K150005	503527	PE-SB-9975	508758	PE-LS-7425
381748	PE-ES-5721	406616	K150009	503527	PE-SB-9981	508759	PE-LS-1573
381749	PE-ES-5722	406616	K150126	503529	CI-SB-9696	508760	PE-LS-0592
381750	PE-ES-5703	406619	K150060	503529	CI-SB-9698	508761	PE-LS-5046
381752	PE-ES-5703	406620	K150009	503538	CI-SB-9696	508762	PE-LS-3817
381755	CI-ES-0865	406621	K150043	503538	CI-SB-9698	508764	PE-LS-3817
381756	CI-ES-0864	406621	K150122	503557	TO-SB-10085	508765	CI-LS-7297
381757	PE-ES-3330	406622	K150009	503726	PE-SB-9972	508766	PE-LS-1573
381758	PE-ES-3331	406622	K150010	503808	PE-SB-9971	508768	PE-LS-3989
381761	CI-ES-14932	406622	K150126	503815	PE-SB-9970	508769	PE-LS-3990
381762	CI-ES-14931	406629	K150043	503816	CI-SB-9698	508770	CI-LS-7297
381763	CI-ES-3965	406629	K150044	503817	CI-SB-9696	508774	PE-LS-1573
381764	CI-ES-3964	406630	K150043	503818	CI-SB-9684	508776	PE-LS-12664
381765	PE-ES-8473	406630	K150122	503819	CI-SB-9682	508778	PE-LS-3817
381766	PE-ES-8474	406631	K150118	503821	PE-SB-9975	508779	CI-LS-7297
381767	PE-ES-4163	406632	K150059	503822	PE-SB-9976	509110	CI-LS-4959
381768	PE-ES-4164	406634	K150059	503825	PE-SB-9986	509315	PE-SB-8784
381769	CI-ES-5119	406635	K150119	503835	PE-SB-9984	509434	PE-SB-1632
381770	CI-ES-5120	406636	K150123	503835S	PE-LS-1048	509435	PE-SB-3218
381773	CI-ES-7316	406637	K150043	503839	PE-SB-9981	509436	PE-SB-7772
381774	PE-ES-7414	406637	K150044	503841	CI-SB-9684	509437	PE-SB-6649
381775	PE-ES-7066	406641	K150087	503842	CI-SB-9682	509440	PE-SB-6650
381776	PE-ES-7065	406642	K150122	503868	CI-SB-10082	509453	PE-SB-1295
381777	CI-ES-5119	406643	K150124	5038E4	PE-SB-10926	509456	CI-SB-6698
381780	CI-ES-8465	406643	K150126	5038E5	PE-SB-10927	509457	CI-SB-6697
381781	CI-ES-8466	406644	K150124	5038E6	PE-SB-10925	509459	PE-SB-6729
381784	CI-ES-8975	406646	K150150	5081P3	CI-SB-14915	509460	PE-SB-6730
381785	CI-ES-8976	406648	K150152	5081Q3 (-)	CI-SB-13678	509463	PE-SB-6777
381786	CI-ES-8975	406649	K150151	508723	PE-DS-5707	509464	PE-SB-6773
381786	OP-ES-4921	406652	K150009	508727	PE-LS-1118	509465	CI-SB-4737
381787	CI-ES-8976	406652	K150010	508730	CI-DS-3348	509466	PE-SB-6774
381787	OP-ES-4922	406652	K150126	508731	CI-DS-3348	509469	CI-SB-7141
381788	PE-ES-7066	406653	K150009	508732	PE-DS-5707	509474	PE-SB-6703
381789	PE-ES-7065	406653	K150010	508733	PE-LS-1626	509475	PE-SB-6704
381794	PE-ES-12655	406653	K150126	508734	PE-LS-5046	509476	PE-SB-6778
3817A1	PE-ES-12661	406655	K150130	508735	PE-LS-1048	509477	CI-SB-4736
3817A2	PE-ES-12662	406656	K150127	508737	CI-LS-3267	509480	PE-SB-6779
3817A5	CI-ES-7316	406657	K150128	508738	PE-DS-6970	509481	PE-SB-6750
400133	CI-AX-5060	406660	K150130	508739	PE-LS-5046	509482	PE-SB-13633
400177	CI-AX-7879	406664	K150128	508740	PE-DS-5041	509487	PE-SB-6780
4001E4	CI-AX-7320	406664	K150225	508741	CI-DS-3348	509488	PE-SB-6781
4001E4S1	CI-AX-7320	406670	K150227	508742	PE-DS-6970	509494	PE-SB-13683
4001K6	CI-AX-7879	406673	K150128	508742	PE-LS-5046	509495	PE-SB-13632
4001NZ	CI-AX-7879	4241428	FI-TC-8872	508743	PE-LS-0592	509496	CI-SB-13496
4001PA	CI-AX-7879	4330859035	TO-BJ-2274	508745	PE-LS-1573	509498	PE-SB-12652
400622	K150119	4331968	FI-SB-3171	508746	PE-LS-5046	509499	CI-SB-10735
400624	FI-AX-7528	4403661	PE-ES-5703	508748	PE-LS-0592	5094A0	PE-SB-12653
401815	K150119	4806859035 (-)	TO-BJ-2274	508749	CI-DS-3348	5094A1	CI-SB-10736
4018A3	FI-ES-7529	4806959035 (-)	TO-BJ-2274	508750	PE-LS-3817	5094A2	PE-SB-13682
4018A4	FI-AX-7528	503178	CI-SB-10082	508751	CI-LS-2468	5094A6	CI-SB-13680
4018A5	K150118	503179	CI-SB-10083	508752	PE-LS-3324	5094A8	CI-SB-7949
4018A6	K150123	503180	CI-SB-10070	508753	PE-LS-3325	5094A9	CI-SB-13679
4018E0	CI-ES-2460	503518	PE-SB-9974	508754	PE-LS-3990	5094C1	PE-SB-10738
4018H4	FI-ES-7529	503523	PE-SB-9975	508755	PE-LS-3989	5094C2	PE-SB-10741
405909	PE-ES-5042	503523	PE-SB-9976	508756	CI-LS-7259	5094C3	PE-SB-10852
405912	CI-ES-2466	503523	PE-SB-9981	508757	PE-LS-3817	5094C4	PE-SB-12589

...PEUGEOT	MOOG
5094C5	PE-SB-12590
5094C6	CI-SB-7938
5094E2	PE-SB-12589
5094E3	CI-SB-10709
5094E4	CI-SB-10710
5094E5	PE-SB-10500
5094E6	PE-SB-12544
5094E7	CI-SB-10711
5094F3	PE-SB-12652
5131 C9	CI-SB-4962
513143	PE-SB-4528
513147	PE-SB-8840
513153	PE-SB-7964
513154	PE-SB-10745
513156	PE-SB-7963
513163	PE-SB-4546
513169	CI-SB-4058
513170	CI-SB-4059
513171	CI-SB-4459
513172	CI-SB-7966
513173	CI-SB-7967
513176	PE-SB-10744
513178	PE-SB-4516
513179	PE-SB-2229
513180	PE-SB-7962
513193	PE-SB-10110
513194	PE-SB-10108
513199	PE-SB-2229
5131A4	CI-SB-8993
5131A5	PE-SB-10431
5131A9	PE-SB-10110
5131C1	CI-SB-8992
5131C5	PE-SB-10743
5131C6	CI-SB-10785
5131E0	PE-SB-10743
5131E9	CI-SB-8991
5131F0	CI-SB-8991
5131F2	PE-SB-8839
5131F4	CI-SB-13519
5131F8	PE-SB-10110
5131F9	CI-SB-8991
5131G1	MI-SB-13781
5131G4	CI-SB-10695
5131G8	FI-SB-8790
5131H1	PE-SB-10746
5131H5	CI-SB-13517
515110	PE-SB-7417
515124	PE-SB-7757
515259	PE-SB-4532
515261	CI-SB-4473
515262	CI-SB-7974
5170F5	CI-LS-7322
5170F6	CI-LS-7322
517242	PE-SB-6782
517243	PE-SB-6783
517258	CI-SB-7939

...PEUGEOT	MOOG
5175CF	PE-TC-8470
517817	PE-DS-6904
517818	PE-DS-6905
517821	PE-DS-6904
517822	PE-DS-6905
517830	PE-DS-6904
517831	PE-DS-6905
517838	PE-DS-5043
517839	PE-LS-0785
517843	PE-DS-6904
517844	PE-DS-6905
517846	PE-LS-3326
517848	PE-LS-7423
517849	PE-LS-7424
517852	PE-LS-3326
55700751	FI-SB-5439
55703232	FI-SB-5435
7695186	PE-TC-5040
7701038840	K150132
77362280	CI-AX-2467
77364568	CI-ES-8975
77364569	CI-ES-8976
7910030073	K150005
85048214	CI-AX-3361
85048214	CI-RK-15001
85048214	CI-RK-15003
85048214	CI-RK-15018
85048214	CI-RK-15019
8D0419831	K150128
91504248	PE-BJ-3189
91510913	K150005
91510923	K150005
91516336	PE-TC-3198
91516337	PE-TC-3199
91519408	PE-TC-5033
91519409	PE-TC-5034
91595941	K150005
9451076780	K150123
9451076780	K150132
9451076780	K150150
9451076780	K150151
9451076780	K150152
9455305059	PE-TC-3198
9455305060	PE-TC-3199
9458084180	PE-ES-5723
9458084280	PE-ES-5724
9471000565	PE-ES-5723
9471000665	PE-ES-5724
9471000965	CI-DS-3366
9471007465	PE-ES-5723
9471009465	PE-ES-0664
95028039	PE-BJ-3347
95560858	PE-AX-5704
95603309	PE-BJ-3357
95639171	K150043
95639171	K150044

...PEUGEOT	MOOG
95639173	K150043
95658882	CI-WP-13401
95658883	CI-WP-13402
95658884	CI-WP-13401
95658885	CI-WP-13402
95658978	PE-WP-6980
95658979	PE-WP-6979
96025445	CI-BJ-3355
96048214	CI-DS-3366
96050338	CI-SB-1310
96080894	CI-DS-3348
96080921	CI-DS-3348
96080924	CI-DS-3348
96087507	CI-BJ-3355
96093233	PE-BJ-3356
96106474	PE-SB-1301
96110483	PE-SB-1303
96113432	CI-SB-1302
96147478	CI-SB-4058
96147479	CI-SB-4059
96147514	PE-LS-1626
96148480	CI-SB-1310
9617783680	PE-DS-5041
96233739	PE-BJ-3347
96288787	PE-AX-3327
96288787	PE-LS-1573
9628878780	PE-AX-3327
9628878780	PE-LS-1573
96324274	PE-LS-0592
9670771480	PE-WP-13660
9670772080	PE-WP-13659
9672192480	PE-BJ-14684
9674746280 (-)	PE-SB-14764
967476380	CI-SB-14916
9675028880	CI-WP-13640
9675031880	CI-WP-13639
9676032180	CI-SB-13993
9676035280	CI-SB-13994
9678311280	CI-WP-13992
9678311380	CI-WP-13991
9680302580	CI-SB-8991
9681897280	CI-SB-8991
9750001180	PE-AX-3696
9800596580	PE-TC-14688
9800596680	PE-TC-14687
9803286480	CI-WP-8760
9803286580	CI-WP-8761
9803434080	CI-BJ-13988
9804947480	PE-LS-3817
9805607380	CI-TC-14828
9805607480	CI-TC-14827
9807130080	PE-LS-3326
9807914180	PE-WP-14686
9807914280	PE-WP-14685
9808868280	PE-LS-1573

PORSCHE	MOOG
171407182D	VO-SB-1326

...PORSCHE	MOOG
171407365C	VO-BJ-3227
171407365D	VO-BJ-3227
171407365F	VO-BJ-3254
171407365G	VO-BJ-3254
191407151A	VO-WP-8209
191407181E	VO-SB-1358
357407182	VO-SB-1329
477419811	VO-ES-3226
477419815	VO-ES-3226
4G0407689C	AU-BJ-13260
4G0423811A	AU-ES-10907
4G0423812A	AU-ES-10908
7L0407077	VO-RK-4858
7L0407183A	VO-SB-5623
7L0412333A	VO-SB-3073
7L0422821	VO-AX-3054
7L0505397	AU-TC-8985
7L0505398	AU-TC-10622
7P0407077	VO-SB-13466
8K0407505B	AU-TC-7881
8K0407506B	AU-TC-7882
94434703320	PO-DS-7117
94434733300	VO-ES-3226
94434733301	PO-ES-7118
95533306910	VO-LS-4397
95533306911	VO-LS-4397
95533306921	VO-LS-4397
95533307010	VO-LS-4398
95533307011	VO-LS-4398
95533307021	VO-LS-4398
95534101730	VO-WP-3060
95534101732	VO-WP-3060
95534101733	VO-WP-3060
95534101830	VO-WP-3061
95534101832	VO-WP-3061
95534101833	VO-WP-3061
95534102700	VO-WP-3071
95534102701	VO-WP-3071
95534102702	VO-WP-3071
95534124203	VO-SB-5624
95534124204	VO-SB-5624
95534158810	VO-SB-5623
95534306900	VO-LS-3053
95534324301	VO-SB-3073
95534713120	VO-ES-3058
95534713121	VO-ES-3058
95534713122	VO-ES-3058
95534713220	VO-ES-3059
95534713221	VO-ES-3059
95534713222	VO-ES-3059
95534719110	K150237
95834105100	VO-TC-13465
95834105300	AU-TC-7887
95834105300	AU-TC-8355
95834105400	AU-TC-7886
95834105400	AU-TC-8356

...PORSCHE

	MOOG
99634306902	VO-LS-13587
99634306903	VO-LS-13587
99634306904	VO-LS-13587
99634307002	VO-LS-10912
99634307003	VO-LS-10912
99634307004	VO-LS-10912
99634307OZ2	VO-LS-10912
99634307OZ3	VO-LS-10912

PROTON

	MOOG
5450322A00	MI-BJ-10371
5450325A00	MI-BJ-10371
5450331600	MI-BJ-10371
5452031600	MI-BJ-10371
5453025A00	MI-BJ-10371
5453031600	MI-BJ-10371
MB185477	MI-LS-2451
MB241974	MI-LS-2451
MB527169	MI-ES-2937
MB597605	MI-ES-2937
MB598023	MI-ES-2937
MB907115	MI-WP-0408
MB907116	MI-WP-0407
MB912076	MI-ES-2937
MB912077	MI-WP-0408
MB912078	MI-WP-0407
MB9122077	MI-WP-0408
MR392730	MI-LS-2451
MR954888	MI-LS-2451
PW521020	MI-LS-3328
PW530031	MI-AX-4438
PW530032	MI-AX-4438
PW550281	MI-AX-4438

RENAULT

	MOOG
401600004R	RE-BJ-7212
401602308R	RE-BJ-10478
401604793R	RE-BJ-2832
401606676R	RE-BJ-2302
401608374R	OP-BJ-12502
401609060R	RE-BJ-8336
401613416R	OP-BJ-12502
401613416R	OP-BJ-8965
4401403	K150030
4401403	K150136
4405653	K150136
4408958	NI-WP-2224
4408959	NI-WP-2226
4412934	NI-WP-2224
4412936	NI-WP-2226
4419291	OP-LS-10475
4419304	OP-LS-10476
4420954	OP-LS-12602
4500091	OP-SB-8748
4500094	RE-SB-3846
4500095	RE-SB-3845

...RENAULT

	MOOG
48001JD900 (-)	NI-AX-7337
480800003R	RE-SB-10803
485200001R	RE-ES-7301
485200002R	RE-ES-7302
485200368R	RE-ES-13645
485200410R	RE-ES-3756
485200604R	RE-ES-15266
485200780R	OP-ES-10120
485201502R	RE-ES-13319
485202710R	RE-ES-7861
485202714R	RE-ES-0853
485202733R	RE-ES-13320
485202867R	RE-ES-3755
485204680R	RE-ES-7856
485206730R	OP-ES-10119
485207812R	RE-ES-15265
485208355R	RE-ES-13646
485209446R	RE-ES-0852
485210001R	RE-AX-7303
485210OQ0ESK	OP-AX-10118
485211071R	RE-AX-13416
485211375R	RE-AX-13416
485212373R	OP-AX-10118
485213026R	RE-AX-15262
485213172R	RE-AX-13417
485215612R	RE-AX-7300
485215612R	RE-RK-15039
485215612R	RE-RK-15040
485215961R	RE-AX-7300
485215961R	RE-RK-15039
485215961R	RE-RK-15040
485218799R	RE-AX-14777
48527JD01A	NI-ES-7226
48647JD01A	NI-ES-7225
5000387023	RE-BJ-4275
5000387653	RE-BJ-4275
5000387654	RE-BJ-4276
5055384809	RE-BJ-4276
54 56 000 02R	RE-SB-13831
5432000QAA	NI-SB-9966
5442300QAA	RE-SB-3845
545000001R	RE-WP-13830
545000001R	RE-WP-8330
545000001R (-)	RE-SB-13831
545000001R (-)	RE-SB-8332
545000001R (-)	RE-SB-8333
545000002R	RE-WP-8330
545000008R	RE-WP-12598
545000008R (-)	RE-BJ-12595
545000011R	RE-WP-8330
545001535R	RE-TC-10480
545003037R	RE-WP-2090
545004269R	RE-WP-3745
545004529R	RE-WP-13608
545004529R (-)	RE-BJ-13609
545004529R (-)	RE-SB-13600

...RENAULT

	MOOG
545004EA0B	NI-WP-15274
545006542R	RE-TC-10480
545006542R (-)	RE-SB-10477
545007106R	RE-WP-13608
545007106R (-)	RE-BJ-13609
545008682R	RE-WP-8334
545009207R	RE-WP-8334
545009207R (-)	RE-SB-8013
545009207R (-)	RE-SB-8017
54500CC40A (-)	NI-BJ-4954
54500JD000	NI-WP-7230
54500JD000 (-)	NI-BJ-4954
54500JD000 (-)	NI-SB-8909
54500JD000 (-)	NI-SB-8910
54500JG000	NI-WP-7230
54500JY00A	NI-WP-7230
5450100082R (-)	RE-SB-8332
5450100082R (-)	RE-SB-8333
545010008R	RE-WP-13829
545010008R	RE-WP-8331
545010008R (-)	RE-SB-13831
545010009R	RE-WP-8331
545010010R	RE-WP-12597
545010010R (-)	RE-BJ-12595
545010012R	RE-WP-8331
545010294R	RE-WP-13607
545010294R (-)	RE-BJ-13609
545011362R	RE-WP-3744
545011727R	RE-WP-13607
545011727R (-)	RE-BJ-13609
545011727R (-)	RE-SB-13600
545014055R	RE-WP-8335
545014055R (-)	RE-SB-8013
545014055R (-)	RE-SB-8017
545014EA0B	NI-WP-15273
545016746R	RE-TC-10479
545016746R (-)	RE-SB-10477
545018194R	RE-WP-8335
545019969R	RE-TC-10479
54501CC40 A (-)	NI-BJ-4954
54501JD000	NI-WP-7229
54501JD000 (-)	NI-SB-8909
54501JD000 (-)	NI-SB-8910
54501JG000	NI-WP-7229
54501JY00A	NI-WP-7229
545040131R	RE-WP-2090
545040445R	NI-WP-7230
545041327R	RE-WP-15644
545045476R	RE-WP-15644
545045743R	RE-WP-2090
545046817R	RE-WP-13710
545047954R	RE-WP-15644
545048506R	RE-WP-13710
545048506R (-)	RE-BJ-15237
545050510R	RE-WP-13709
545052737R	RE-WP-15643

...RENAULT

	MOOG
545053170R	RE-WP-2089
545055208R	RE-WP-15643
545055212R	NI-WP-7229
545055708R	RE-WP-15643
545055711R	RE-WP-13709
545059335R	RE-WP-2089
545601684R	RE-SB-15328
54560AX600	NI-SB-2793
54560AX600	NI-SB-2794
5457000QAA	RE-SB-3846
54570BB00A	NI-SB-8910
546120007R	RE-SB-13315
54613000R	RE-SB-10542
546131253R	OP-SB-13630
546134EA0B	RE-SB-15261
546135490R	OP-SB-13923
54613JD17A	NI-SB-14591
546180001R	RE-LS-7304
546180002R	RE-LS-7999
546180004R	OP-LS-10475
546180009R	RE-LS-14822
54618JD00A	NI-LS-7228
54668JD00A	NI-LS-7227
550440001R	RE-SB-10846
550445344R	RE-SB-10803
550450001R	RE-SB-10845
551100010R	RE-LS-14775
551100011R	RE-LS-14776
551100019R	OP-LS-10476
551100020R	OP-LS-12602
551107916R	RE-LS-2100
551209341R	RE-TC-14597
55120JD00B	NI-TC-15134
55120JD00B (-)	NI-SB-15132
55121JD00B	NI-TC-15133
55121JD00B (-)	NI-SB-15132
55618JY00B	NI-LS-7766
55619JY00B	NI-LS-7767
6000022702	RE-ES-4287
6000022703	RE-ES-4288
6000022714	RE-ES-7023
6000022715	RE-ES-7024
6000022720	RE-ES-7053
6000022721	RE-ES-7054
6000022730	RE-ES-7026
6000022731	RE-ES-7027
6000022736	RE-ES-7060
6000022736	RE-ES-7061
6000022737	RE-ES-7060
6000022737	RE-ES-7061
6000022752	RE-ES-7053
6000022753	RE-ES-7054
6000022761	RE-ES-0427
6000022762	RE-ES-0426
6000022807	RE-AX-0602
6000022807	RE-RK-15015

...RENAULT	MOOG
6000022819	RE-AX-7056
6000022819	RE-RK-15016
6000022825	RE-AX-0380
6000022825	RE-RK-15021
6000022825	RE-RK-15022
6000022825	RE-RK-15027
6000022825	RE-RK-15028
6000025497	K150138
6000025498	K150135
6000025546	K150134
6000025597	K150115
6000025671	K150134
6000030047	RE-ES-7014
6000030048	RE-ES-7015
6000030064	RE-ES-4288
6000030065	RE-ES-4287
6001007822	RE-SB-1694
6001021454	RE-TC-4011
6001021455	RE-TC-4012
6001547138	RE-LS-5740
6001547140	RE-SB-3758
6001547519	RE-WP-3745
6001547520	RE-WP-3744
6001547606	RE-AX-3760
6001547606	RE-RK-15023
6001547610	RE-ES-3755
6001547611	RE-ES-3756
6001549181	RE-WP-3744
6001549182	RE-WP-3745
6001549988	RE-SB-4191
6001549989	RE-SB-4191
6001550441	RE-AX-3760
6001550441	RE-RK-15023
6001550442	RE-ES-3755
6001550443	RE-ES-3756
6001550446	RE-WP-3744
6001550447	RE-WP-3745
6001550909	RE-WP-3744
6001550910	RE-WP-3745
6020022737	RE-ES-7060
6025305572	RE-WP-1062
6025305573	RE-WP-1063
6025306471	RE-SB-4713
6025307649	RE-WP-1062
6025307650	RE-WP-1063
6025307746	RE-SB-1340
6025308155	RE-BJ-0471
6025311529	RE-SB-4713
6025370229	RE-ES-0426
6025370230	RE-ES-0427
6025370231	K150133
6025370493	RE-DS-2827
6025370493 (-)	RE-AX-2374
6025370494	RE-DS-2828
6025370494 (-)	RE-AX-2374
6040002105	RE-BJ-2302

...RENAULT	MOOG
6040002245	RE-SB-3746
6040145798	RE-SB-10803
6040205623	RE-SB-15328
6640096299	RE-SB-13600
7320351	RE-SB-10172
7700104152	RE-SB-1643
77002144561	RE-SB-6836
7700301255	RE-SB-7985
7700301720	RE-SB-7985
7700302118	RE-WP-1052
7700302119	RE-WP-1053
7700302122	RE-SB-3846
7700302123	RE-SB-3845
7700302165	RE-LS-1058
7700302278	RE-SB-10929
7700302439	RE-SB-3846
7700302440	RE-SB-3845
7700307343	RE-LS-1059
7700309070	RE-LS-1058
7700309071	RE-LS-1059
7700309154	OP-SB-7215
7700309189	RE-WP-1052
7700309190	RE-WP-1053
7700310809	RE-WP-0339
7700310810	RE-WP-0338
7700312851	RE-BJ-2098
7700312852	RE-BJ-1040
7700313944	RE-WP-0339
7700313945	RE-WP-0338
7700314855	RE-SB-6847
7700349339	RE-AX-2039
7700413493	RE-WP-0226
7700413494	RE-WP-0227
7700415488	RE-SB-4108
7700416271	RE-SB-4095
7700418693	RE-BJ-7025
7700419236	RE-SB-1343
7700419249	RE-SB-1343
7700421804	RE-BJ-7025
7700424399	RE-SB-1343
7700424459	RE-SB-1343
7700425227	RE-WP-0339
7700425228	RE-WP-0338
7700425724	RE-WP-2037
7700428665	RE-SB-0296
7700428666	RE-SB-2199
7700428738	RE-SB-2211
7700430765	RE-WP-2037
7700430766	RE-WP-2038
7700430831	RE-WP-7033
7700430832	RE-WP-7032
7700436014	RE-SB-1166
7700436302	RE-WP-7033
7700436303	RE-WP-7032
7700436706	RE-LS-13461
7700437136	RE-LS-7977

...RENAULT	MOOG
7700465689	RE-BJ-4281
7700469580	RE-BJ-4266
7700504459	RE-SB-1332
7700554459	RE-SB-1332
7700562943	RE-SB-1332
7700571172	RE-ES-4289
7700571173	RE-ES-4290
7700586241	CI-TC-3342
7700586466	CI-TC-3341
7700653459	K150004
7700654178	RE-SB-1592
7700654179	RE-SB-1592
7700656272	RE-AX-4278
7700656318	RE-AX-4253
7700667184	OP-SB-15690
7700667186	RE-SB-6647
7700676325	RE-WP-0227
7700678649	K150008
7700680852	K150004
7700687433	RE-AX-2039
7700695673	RE-WP-7041
7700695674	RE-WP-7040
7700706007	K150030
7700706007	K150136
7700706628	RE-BJ-4295
7700708438	RE-BJ-4260
7700708439	RE-BJ-4261
7700710206	RE-AX-4272
7700710209	RE-AX-7008
7700717043	RE-WP-7036
7700717044	RE-WP-7037
7700757324	RE-SB-9989
7700757324S1	RE-SB-9989
7700759418	RE-DS-7022
7700760264	RE-SB-0540
7700762843	RE-SB-10172
7700774566	K150107
7700779781	K150136
7700781034	RE-WP-7033
7700781035	RE-WP-7032
7700781095	K150030
7700781095	K150136
7700781097	K150008
7700781441	RE-SB-7325
7700781463	RE-SB-4486
7700783447	RE-BJ-4264
7700783449	RE-WP-7041
7700783450	RE-WP-7040
7700783453	RE-WP-7036
7700783453	RE-WP-7037
7700783454	RE-WP-7037
7700783455	RE-WP-7036
7700783456	RE-WP-7037
7700783457	RE-WP-7041
7700783458	RE-WP-7040
7700784170	RE-SB-1719

...RENAULT	MOOG
7700784171	RE-SB-2835
7700785788	RE-SB-1166
7700789412	RE-SB-6672
7700789478	RE-SB-1334
7700790726	RE-SB-1166
7700794386	RE-WP-7030
7700794387	RE-WP-7031
7700797821	RE-SB-6670
7700798053	RE-SB-1694
7700799064	RE-SB-1335
7700799065	RE-SB-1336
7700799404	RE-SB-1167
7700800976	RE-SB-1694
7700802343	RE-WP-4928
7700802344	RE-WP-4929
7700805494	RE-DS-7057
7700806238	RE-SB-1341
7700806238	RE-SB-1342
7700806239	RE-SB-1341
7700806239	RE-SB-1342
7700807194	RE-BJ-7025
7700807580	RE-WP-0340
7700807581	RE-WP-0341
7700818051	RE-WP-7033
7700818052	RE-WP-7032
7700818053	RE-WP-7033
7700818054	RE-WP-7032
7700819415	K150004
7700819415	K150008
7700819928	RE-SB-1337
7700819929	RE-SB-1338
7700820028	RE-WP-0228
7700820029	RE-WP-0229
7700821167	RE-SB-7354
7700822503	RE-SB-1340
7700823097	RE-WP-0226
7700823098	RE-WP-0227
7700823580	RE-WP-0340
7700823581	RE-WP-0341
7700824042	RE-SB-1339
7700827178	RE-DS-13249
7700827435	RE-SB-9987
7700827435S2	RE-SB-9987
7700827436	RE-SB-9988
7700827436S2	RE-SB-9988
7700829322	RE-BJ-7025
7700829529	RE-SB-9992
7700829529S1	RE-SB-9992
7700829841	RE-WP-7033
7700829842	RE-WP-7032
7700831364	RE-SB-1337
7700831368	RE-WP-7033
7700831369	RE-WP-7032
7700834570	RE-ES-7053
7700834571	RE-ES-7054
7700834918	RE-BJ-10718

...RENAULT	MOOG
7700835254	RE-SB-9991
7700835254S1	RE-SB-9991
7700835929	RE-SB-2834
7700839316	RE-SB-7975
7700840741	RE-SB-1334
7700846916	RE-SB-9997
7700847382	RE-LS-4008
7700847383	RE-SB-2238
7701038839	K150131
7701038840	K150131
7701041311	RE-ES-7053
7701041312	RE-ES-7054
7701047415	RE-ES-0672
7701047416	RE-ES-0673
7701047812	RE-ES-0672
7701047813	RE-ES-0673
7701049282	RE-ES-0853
7701049283	RE-ES-0852
7701054583	RE-ES-2092
7701054584	RE-ES-2093
7701054585	RE-ES-2092
7701056678	RE-SB-6849
7701056969	RE-BJ-1040
7701056970	RE-BJ-7906
7701059672	RE-SB-2837
7701062549	NI-SB-14049
7701069131	RE-SB-10843
7701070154	RE-BJ-7905
7701147126	RE-ES-1563
7701147127	RE-ES-1562
7701207491	NI-SB-9966
7701207678	RE-SB-9996
7701209534	RE-RK-7332
7701348037	RE-SB-1592
7701450635	RE-BJ-4260
7701450636	RE-BJ-4260
7701450637	RE-BJ-4261
7701450638	RE-BJ-4261
7701450904	RE-BJ-0526
7701451904	RE-BJ-0526
7701455905	RE-BJ-0531
7701455906	RE-BJ-0532
7701460875 (-)	RE-AX-4253
7701460885	RE-BJ-0532
7701460886	RE-BJ-0531
7701460955	RE-ES-4252
7701461010	RE-DS-4299
7701461141	RE-ES-4256
7701461161	RE-BJ-4260
7701461162	RE-BJ-4261
7701461331	RE-BJ-4267
7701461332	RE-BJ-4266
7701461667	RE-BJ-4271
7701461770	PE-ES-5703
7701461770	RE-ES-4273
7701461923	RE-DS-7009

...RENAULT	MOOG
7701462170	RE-AX-4265
7701462182	RE-BJ-0811
7701462182	RE-BJ-4264
7701462282	RE-BJ-4260
7701462283	RE-BJ-4261
7701462387	RE-AX-4280
7701462391	RE-AX-7020
7701462427	RE-ES-4277
7701462540	RE-DS-7004
7701462540 (-)	RE-AX-4265
7701462692	RE-BJ-4276
7701462693	RE-BJ-4275
7701462987 (-)	RE-AX-7020
7701463025	RE-DS-7009
7701463025 (-)	RE-DS-7009
7701463195	RE-DS-7017
7701463229	RE-BJ-4295
7701463230	RE-BJ-4281
7701463346	RE-DS-7022
7701463346 (-)	RE-AX-2039
7701463686	RE-BJ-4260
7701463687	RE-BJ-4261
7701464151	RE-ES-4256
7701464313	RE-AX-4280
7701464313	RE-DS-7017
7701464313 (-)	RE-AX-4278
7701465689	RE-BJ-4281
7701466159	RE-ES-4287
7701466159	RE-ES-4288
7701466159Y	RE-AX-7008
7701466799	RE-AX-0380
7701466799	RE-RK-15021
7701466799	RE-RK-15022
7701466799	RE-RK-15027
7701466799	RE-RK-15028
7701466799 (-)	RE-AX-0380
7701466799 (-)	RE-RK-15021
7701466799 (-)	RE-RK-15022
7701466799 (-)	RE-RK-15027
7701466799 (-)	RE-RK-15028
7701466800	RE-AX-0380
7701466800	RE-DS-1071
7701466800	RE-RK-15021
7701466800	RE-RK-15022
7701466800	RE-RK-15027
7701466800	RE-RK-15028
7701466800 (-)	RE-AX-0380
7701466800 (-)	RE-RK-15021
7701466800 (-)	RE-RK-15022
7701466800 (-)	RE-RK-15027
7701466800 (-)	RE-RK-15028
7701467218	RE-DS-7045
7701467218 (-)	RE-AX-7046
7701467219	RE-DS-7044
7701467235	RE-DS-7018
7701467237	RE-DS-7013

...RENAULT	MOOG
7701467271	RE-DS-7002
7701467271 (-)	RE-AX-0602
7701467271 (-)	RE-RK-15015
7701467272	RE-DS-7003
7701467272 (-)	RE-AX-0602
7701467272 (-)	RE-RK-15015
7701467273	RE-ES-4287
7701467274	RE-ES-4288
7701467501	RE-DS-7059
7701467501 (-)	RE-AX-7056
7701467501 (-)	RE-RK-15016
7701467502	RE-DS-7058
7701467502 (-)	RE-AX-7056
7701467502 (-)	RE-RK-15016
7701467858	RE-DS-1066
7701467859	RE-DS-1071
7701468272	RE-DS-1066
7701468273	RE-DS-1071
7701468411	RE-BJ-0811
7701468411	RE-BJ-4264
7701468820	RE-BJ-0532
7701468883	RE-BJ-0811
7701468883	RE-BJ-4264
7701468952	RE-DS-0856
7701468953	RE-DS-0857
7701469228	RE-BJ-4295
7701469229	RE-AX-4280
7701469229	RE-AX-7006
7701469229	RE-DS-7017
7701469229 (-)	RE-AX-7006
7701469231	RE-ES-4256
7701469251	RE-AX-7056
7701469251	RE-RK-15016
7701469280	RE-AX-0676
7701469464	RE-BJ-10718
7701469486	K150110
7701469486	K150138
7701469486	K150157
7701469487	K150111
7701469496	K150134
7701469497	K150114
7701469502	RE-AX-0675
7701469517	RE-AX-7046
7701469564	K150135
7701469565	K150143
7701469567	K150143
7701469571	K150143
7701469572	K150143
7701469617	K150030
7701469617	K150121
7701469617	K150136
7701469618	K150136
7701469657	K150115
7701469665	RE-AX-7056
7701469665	RE-RK-15016
7701469777	RE-AX-0602

...RENAULT	MOOG
7701469777	RE-AX-7001
7701469777	RE-RK-15015
7701469778	RE-AX-0602
7701469778	RE-RK-15015
7701470362	RE-AX-2097
7701470363	RE-ES-0809
7701470364	RE-ES-0810
7701470753	K150008
7701470753	K150138
7701470763	RE-AX-2087
7701470764	RE-AX-1616
7701470765	RE-ES-7053
7701470766	RE-ES-7054
7701471124	RE-AX-0854
7701471125	RE-AX-1564
7701471126	RE-ES-1563
7701471127	RE-ES-1562
7701471141	K150157
7701471143	RE-AX-0855
7701471144	RE-AX-0855
7701471145	RE-ES-1563
7701471146	RE-ES-1562
7701471424	RE-AX-2087
7701471425	RE-AX-1616
7701471844	RE-AX-0859
7701471844	RE-RK-15013
7701471885	RE-AX-7756
7701472038	RE-BJ-0811
7701472038	RE-BJ-4264
7701472087	RE-AX-0858
7701472087	RE-RK-15014
7701472113	RE-AX-3851
7701472113	RE-RK-15025
7701472113	RE-RK-15026
7701472115	RE-AX-1564
7701472120	RE-AX-0589
7701472120	RE-RK-15024
7701472143	RE-AX-0855
7701472734	RE-AX-4014
7701472734	RE-RK-15033
7701472734	RE-RK-15248
7701472735	RE-AX-4014
7701472735	RE-RK-15033
7701472735	RE-RK-15248
7701472765	K150246
7701472766	RE-AX-1060
7701472766	RE-RK-15067
7701472843	RE-ES-0672
7701473333	NI-AX-2219
7701473333	OP-RK-15060
7701473443	RE-AX-13462
7701473498	RE-AX-5087
7701473498	RE-RK-15002
7701473498	RE-RK-15005
7701473652	K150008
7701473655	RE-AX-0589

...RENAULT	MOOG
7701473655	RE-RK-15024
7701473656	RE-AX-10820
7701474075	K150253
7701474076	RE-AX-2831
7701474076	RE-RK-15068
7701474447	K150254
7701474448	RE-AX-2091
7701474448	RE-RK-15000
7701474448 (-)	RE-AX-2091
7701474448 (-)	RE-RK-15000
7701474492	RE-ES-0672
7701474493	RE-ES-0673
7701474641	RE-ES-0672
7701474642	RE-ES-0673
7701474795	RE-ES-2092
7701474796	RE-ES-2093
7701475841	RE-AX-2103
7701475841	RE-RK-15066
7701475842	RE-ES-0672
7701475843	RE-ES-0673
7701476576	RE-BJ-2302
7701477385	RE-BJ-7762
7701477878	RE-AX-8103
7701478029	RE-BJ-2302
7701478406	RE-AX-7300
7701478406	RE-RK-15039
7701478406	RE-RK-15040
7701478407	RE-ES-7306
7701478408	RE-ES-7307
7701478551	RE-AX-1060
7701478551	RE-RK-15067
7701478552	RE-AX-2831
7701478552	RE-RK-15068
7701478762	RE-AX-2097
7701783454	RE-WP-7037
7702111568	RE-SB-1643
7702145337	RE-AX-4298
7704000681	RE-SB-1333
7704001371	RE-SB-1332
8000273728	RE-WP-2301
8200001857	RE-LS-4439
8200002868	RE-SB-2830
8200002870	RE-LS-2095
8200020402	RE-SB-10801
8200024373	RE-SB-7205
8200026654	RE-WP-2301
8200026655	RE-WP-2300
8200038243	RE-SB-10802
8200039132	OP-SB-10171
8200040618	RE-LS-3072
82000407918	RE-LS-1072
8200041166	RE-SB-3821
8200042594	RE-SB-7975
8200048177S	OP-SB-8083
8200049624	OP-SB-3818
8200050079	RE-LS-1072

...RENAULT	MOOG
8200050191	RE-LS-1072
8200054003	NI-WP-2224
8200054003	RE-WP-2301
8200054003	RE-WP-7761
8200054006	NI-WP-2226
82000629180S	OP-SB-8083
8200127308	RE-LS-2100
8200150759	RE-SB-2199
8200166159	RE-LS-2088
8200166160	RE-LS-7407
8200197179	RE-WP-0339
8200197187	RE-WP-0338
8200222463	RE-SB-9996
8200242025	RE-SB-3820
8200247898	NI-WP-2224
8200247898	RE-WP-2301
8200247898	RE-WP-7761
8200247900	NI-WP-2226
8200247900	RE-WP-2300
8200255760	RE-WP-3489
8200255761	RE-WP-3490
8200256944	RE-WP-1052
8200256945	RE-WP-1052
8200256945	RE-WP-1053
8200262344	RE-SB-3758
8200265217	RE-LS-7996
8200270055	RE-WP-1052
8200270058	RE-WP-1053
8200272592	RE-SB-12644
8200272594	RE-SB-6850
8200273728	RE-WP-2301
8200273729	RE-WP-2300
8200277960	RE-LS-5740
8200287912	RE-SB-4191
8200298454	RE-WP-2089
8200298455	RE-WP-2090
8200298455S	RE-BJ-2832
8200298760	RE-BJ-2094
8200298761	RE-BJ-2094
8200346941	RE-WP-2101
8200346942	RE-WP-2102
8200380965	RE-SB-9030
8200389134	RE-WP-2301
8200389134 (-)	RE-SB-2836
8200389135	RE-WP-2300
8200389135 (-)	RE-SB-2830
8200395007	RE-WP-7761
8200395034	RE-WP-7760
8200427868	RE-SB-4095
8200427869	RE-SB-4108
8200431675	OP-SB-10171
8200452715	RE-WP-2301
8200452715 (-)	RE-SB-2836
8200452716	RE-WP-2300
8200452716 (-)	RE-SB-2830
8200457208	RE-WP-2089

...RENAULT	MOOG
8200457209	RE-WP-2090
8200565072	NI-WP-2224
8200565072	RE-WP-2301
8200565072	RE-WP-7761
8200565079	NI-WP-2226
8200565079	RE-WP-2300
820058656 (-)	RE-BJ-7431
8200586561	RE-WP-7903
8200586561 (-)	RE-SB-7433
8200586561 (-)	RE-SB-7434
8200586564	RE-SB-7434
8200586567	RE-WP-7904
8200586567 (-)	RE-SB-7433
8200586567 (-)	RE-SB-7434
820058657 (-)	RE-BJ-7432
8200586570	RE-SB-7433
8200589986	RE-SB-10803
8200597258	RE-SB-4095
8200602612	RE-WP-2301
8200602613	RE-WP-2300
8200603492	RE-LS-10543
8200605381	RE-LS-2100
8200615057	RE-WP-2101
8200615058	RE-WP-2102
8200619922	RE-LS-4439
8200626959	RE-WP-7761
8200626961	RE-WP-7760
8200626965	RE-SB-13812
8200651161	RE-SB-1343
8200651163	RE-SB-1334
8200651164	RE-SB-1338
8200651168	RE-SB-1337
8200661217	RE-LS-2095
8200669065	RE-LS-2088
8200669066	RE-LS-7407
8200679063	RE-WP-2089
8200679067	RE-WP-2090
8200686016	RE-LS-7996
8200688871	RE-TC-10093
8200688871 (-)	OP-SB-10114
8200688871 (-)	OP-SB-10117
8200688875	RE-TC-10092
8200688875 (-)	OP-SB-10114
8200688875 (-)	OP-SB-10117
8200688877	OP-BJ-12502
8200688877	OP-BJ-8965
8200691425	RE-SB-10541
8200711554	RE-SB-1343
8200713522	RE-LS-1058
8200713523	RE-LS-1059
8200714446	RE-LS-3072
8200714448	RE-LS-1072
8200714955	RE-SB-4095
8200715229	RE-SB-10801
8200737112	RE-WP-7033
8200737114	RE-WP-7032

...RENAULT	MOOG
8200737123	RE-WP-0339
8200737125	RE-WP-0228
8200737126	RE-WP-0229
8200737129	RE-WP-0338
8200737132	RE-WP-2037
8200737133	RE-WP-2038
8200737134	RE-WP-7033
8200737135	RE-WP-7032
8200742906	RE-SB-13481
8200744092	RE-WP-2102
8200750273	OP-TC-8749
8200750274	OP-TC-8750
8200763290	RE-WP-8102
8200763290 (-)	RE-BJ-8100
8200763294	RE-WP-8101
8200763294 (-)	RE-BJ-8100
8200767822	RE-WP-1052
8200767825	RE-WP-1053
8200820918	RE-WP-3745
8200820930	RE-WP-3744
8200839119	RE-TC-14596
8200839121	RE-SB-14598
8200839124	RE-TC-14595
8200852550	RE-SB-10481
8200876657	RE-WP-7760
8200876659	RE-WP-7761
8200891487	RE-LS-10543
8200942392	RE-WP-8101
8200942396	RE-WP-8102
8200942407	RE-WP-0339
8200942407	RE-WP-14757
8200942408	RE-WP-0338
8200942408	RE-WP-14758
8200942420	RE-WP-13766
8200942422	RE-WP-13765
8201079463	RE-LS-2100
8201108332	RE-ES-8764
8201108339	RE-ES-8763
8201108350	RE-AX-8765
9109403	K150030
9109403	K150136
9120709	K150136
91504248	PE-BJ-3189
9160394	RE-SB-3846
9160395	RE-SB-3845
95FB5C485AA	RE-SB-10172
96819161 (-)	OP-SB-8779
96819161 (-)	OP-SB-8780
96819162 (-)	OP-SB-8779
96819162 (-)	OP-SB-8780
D8520JY00A	NI-ES-7226
D8521JD00B	NI-AX-7337
D8521JG00A	NI-AX-7337
D8640JY00A	NI-ES-7225

ROVER	MOOG
1619061	K150019

...ROVER	MOOG
17RH3487	RO-ES-0081
20262500	RO-ES-0081
21A1163	RO-BJ-0551
2A6207	RO-ES-0081
34782107	RO-ES-0081
4543450	SA-WP-2844
51392SR3024	HO-SB-2342
51450ST3E02	HO-SB-1370
51450SV4A00 (-)	RO-SB-4251
51455SR3003	HO-SB-1370
51460ST3E02	HO-SB-1370
51460SV4A00 (-)	RO-SB-4251
51621S84A01	HO-SB-9762
51685SR0004	HO-SB-9762
51728SR0003	HO-SB-9762
51810SM4004	AMGK9761
51923SB2004	HO-SB-9762
52370SR3J00	HO-SB-4043
52621634000	HO-SB-9760
52621SB2004	HO-SB-9760
52621SK3000	HO-SB-9760
52728SK3000	HO-SB-9760
52728SM1A02	HO-SB-9760
53010SR3010	HO-AX-1625
53010ST0000	HO-AX-1625
53010ST7J61	HO-AX-1625
53010ST0000	HO-AX-1625
53521SM4003	HO-AX-1781
53521SM4013	HO-AX-1781
572337	RO-BJ-1496
575882	RO-BJ-0361
83BB3K661BD	K150019
8G8625	RO-ES-0081
90112SM4020	HO-LS-8942
ANR1799	RO-BJ-1496
EGP1662	RO-LS-1831
EGP1673	RO-SB-2840
EMP7331	RO-LS-3719
FTC3570	RO-BJ-0773
FTC3571	RO-BJ-0779
GRG1152	K150033
GRG1157	K150193
GRG150	K150106
GSJ100	RO-ES-0081
GSJ1000	RO-WP-1981
GSJ1000 (-)	RO-SB-5738
GSJ1001	RO-WP-1980
GSJ1001 (-)	RO-SB-5737
GSJ1002	RO-WP-1981
GSJ1011	RO-ES-3547
GSJ166	RO-RK-3427
GSJ187	RO-ES-2095
GSJ226	RO-ES-2095
GSJ227	HO-TC-10867
GSJ228	HO-TC-10870
GSJ257	RO-BJ-3562

...ROVER	MOOG
GSJ258	RO-BJ-3548
GSJ269	RO-BJ-3562
GSJ274	RO-ES-2095
GSJ277	RO-ES-2095
GSJ278	RO-BJ-3548
GSJ279	RO-ES-3446
GSJ280	RO-ES-3447
GSJ281	RO-ES-2095
GSJ286	RO-TC-3550
GSJ287	RO-TC-3551
GSJ288	RO-ES-3547
GSJ292	RO-BJ-3549
GSJ295	RO-BJ-3548
GSJ404	RO-BJ-104170
GSJ407	RO-ES-3153
GSJ408	RO-ES-3154
GSJ412	RO-BJ-2022
GSJ413	RO-TC-3550
GSJ414	RO-TC-3551
GSJ415	RO-WP-2008
GSJ416	RO-WP-2009
GSJ423	HO-WP-0323
GSJ424	HO-WP-0322
GSJ485	HO-WP-0165
GSJ486	HO-WP-0166
GSJ495	HO-ES-0170
GSJ496	HO-ES-0171
GSJ497	RO-BJ-6596
GSJ498	RO-BJ-6597
GSJ499	HO-BJ-0167
GSJ729	RO-BJ-3545
GSJ730	RO-BJ-3546
GSJ731	RO-BJ-3552
GSJ732	RO-ES-3411
GSJ733	RO-ES-0081
GSJ734	RO-ES-0081
GSJ826	RO-ES-3547
GSJ827	RO-ES-2034
GSJ835	RO-WP-0504
GSJ836	RO-WP-0505
GSJ877	RO-ES-1982
GSJ878	RO-ES-1983
GSV1118	RO-BJ-0551
GSV1141	K150036
GSV1170	RO-AX-2843
NAM5308	RO-BJ-3562
NRC4745	RO-ES-1492
NTC1888	LR-LS-2681
QFS000010	RO-ES-0777
QFS100060	RO-ES-0777
QGX100050	HO-ES-0170
QGX100060	HO-ES-0171
QGX100060	HO-ES-2944
QGX100060	HO-ES-2947
QJB100120	RO-ES-3547
QJB100180	RO-ES-1983

...ROVER	MOOG
QJB100190	RO-ES-1982
RBJ000370	RO-WP-1981
RBJ100690	HO-WP-0322
RBJ100781	RO-TC-3551
RBJ100791	RO-TC-3550
RBJ101069	RO-WP-6595
RBJ101070	RO-WP-6594
RBJ102120	HO-WP-0165
RBJ102120	HO-WP-0166
RBJ102130	HO-WP-0165
RBJ102130	HO-WP-0166
RBJ102220	RO-WP-0504
RBJ102220	RO-WP-0505
RBJ102230	RO-WP-0504
RBJ102230	RO-WP-0505
RBJ102500	RO-WP-1981
RBJ102510	RO-WP-1980
RBK100410	RO-BJ-6596
RBM100111	RO-LS-6600
RBM100240	RO-LS-1986
RBX10025	RO-SB-2842
RBX10026	RO-SB-2841
RBX100380	HO-SB-6724
RBX100431	HO-SB-3979
RBX100451	HO-SB-1371
RBX100580	HO-SB-12651
RBX100590	HO-SB-12648
RBX100670	HO-SB-2342
RBX100680	HO-SB-8479
RBX101310	RO-SB-12584
RGD100561	RO-LS-1985
RGD100562	RO-LS-1985
RGD100571	RO-LS-1984
RGD100572	RO-LS-1984
RGX10007	HO-SB-1858
RGX100980	HO-SB-1858
RGX101090	RO-SB-12585
RJB102220	RO-WP-0505
RJB102230	RO-WP-0504
RTC1800	RO-ES-1494
RTC5870	RO-ES-1492
STC1870	RO-ES-0778
STC1871	RO-ES-0777

SAAB	MOOG
12756395	OP-SB-6992
12765896	OP-ES-2081
12781813	OP-ES-2082
12786412	OP-SB-2812
12787821	OP-ES-2081
12787822	OP-ES-2082
12795024	OP-SB-6992
12796013	OP-TC-1955
12796014	OP-TC-1956
12799199	OP-TC-1955
12799200	OP-TC-1956

...SAAB	MOOG
12801423	OP-ES-2081
12801424	OP-ES-2082
12802043	K150216
13 131 232	OP-SB-3822
13104120	OP-LS-3815
13105744	OP-TC-4081
13105744 (-)	OP-SB-13378
13188763	OP-SB-10084
13204071	OP-SB-13644
13204115 (-)	OP-SB-13378
13219141	OP-LS-8349
13230274	OP-TC-4081
13230274 (-)	OP-SB-13378
13237130	OP-LS-2080
13258052	OP-LS-7446
13318886	OP-TC-8347
13318887	OP-TC-8348
1603121	OP-BJ-5567
1603163	OP-BJ-5567
1603244	SA-AX-7754
18993099	K150023
24417251	OP-LS-2080
24434894	OP-SB-10094
24457385	OP-SB-6846
24457386	OP-SB-7935
24457843	OP-SB-8751
24469643	OP-SB-4069
30557109	K150057
322079	SA-ES-4907
322080	SA-ES-4910
322147 (-)	OP-SB-8982
324053	OP-ES-5562
324054	OP-ES-5565
350130	OP-SB-6806
350146	OP-SB-3823
350153	OP-SB-10167
353460	OP-SB-7416
4106969	SA-SB-10000
4242673	SA-ES-4907
4242673 (-)	OP-SB-8982
4242681	SA-ES-4910
4242731	OP-AX-0611
4242749	OP-ES-5562
4242756	OP-ES-5565
4246377	SA-SB-10001
4246377	SA-SB-9998
4246377	SA-SB-9999
4402772	K150057
4482402	SA-SB-13376
4543450	SA-WP-2844
4543450 (-)	VV-SB-13375
4543468	SA-WP-2845
4543468 (-)	VV-SB-13375
4544276	SA-SB-9999
4544599	OP-DS-5574
4545711	SA-SB-10551

...SAAB	MOOG
4565263	OP-TC-7435
4565859	OP-LS-3815
4566378	OP-SB-4456
4566899	OP-SB-1384
4567244	OP-SB-3621
4686606	OP-LS-5582
4835740	OP-BJ-5583
4836540	OP-ES-5579
4836557	OP-AX-5581
4905667	K150179
4905865	K150179
4905949	OP-ES-5579
4908562	SA-SB-10001
4909701	SA-SB-9998
5060892	SA-SB-10001
5061007	SA-SB-9998
5231683	OP-BJ-5583
5233366	SA-SB-9998
5235585	SA-AX-7091
5235650	OP-ES-2081
5235668	OP-ES-2082
5236823	OP-LS-5582
5237516	SA-BJ-10928
5239314	OP-ES-2081
5239322	OP-ES-2082
5239330	SA-AX-7091
7829861	K150023
8905416	SA-BJ-0556
8924177	SA-ES-4902
8937088	SA-AX-0006
8943268	SA-AX-0006
8957045	SA-BJ-4903
8957839	SA-ES-4904
8958365	SA-WP-3339
8958373	SA-SB-4533
8958373	SA-WP-3337
8958944	SA-LS-2846
8961476	SA-SB-4533
8962243	K150038
8962250	SA-AX-1810
8962516	K150038
8965253	SA-SB-2849
8965378	SA-SB-6661
8972135	SA-BJ-4903
8985160	SA-ES-4902
8985384	SA-BJ-0556
8985388	SA-BJ-0556
8988941	SA-AX-0006
8993099	K150023
8993321	SA-BJ-0556
8993354	SA-ES-4902
8993388	SA-BJ-0556
8993396	SA-ES-4902
8993453	SA-ES-4904
8994212	SA-BJ-4903
90304625 (-)	OP-SB-8982

...SAAB	MOOG
90538444	OP-TC-7435
93172254	OP-ES-2081
93172255	OP-ES-2082
93175520	OP-AX-3814
93175520	SA-AX-7754
93185278	OP-BJ-5583
93187434	OP-AX-3814
93187485	OP-AX-3814
93191672	OP-AX-3814
93194334	K150179
93194335	SA-AX-7091

SEAT	MOOG
007350278N	SK-AX-0064
021156110A	SE-TC-4091
021156110B	SE-TC-7509
022162449A	FI-AX-3120
1009649	VO-SB-6815
1044571	VO-SB-1195
113407361E	VO-BJ-0625
113415811C	VO-ES-0615
113415812C	VO-ES-0617
113415813D	VO-ES-9023
114509822	K150001
114509823	K150001
115420020	SK-WP-0661
115420021	SK-WP-0660
115420240	SK-BJ-8223
115422291	SK-SB-5450
115500420	SK-AX-3884
115500440	SK-ES-8222
131405361E	VO-BJ-0609
131405371G	VO-BJ-0610
131415812	VO-ES-0594
131415813D	VO-ES-0618
131415821A	VO-ES-0614
133407361	VO-BJ-3222
138162131A	K150001
170419804A	VO-DS-3224
171407153D	VO-WP-5088
171407153D	VO-WP-5089
171407181A	VO-SB-1325
171407182D	VO-SB-1326
171407365C	VO-BJ-3227
171407365F	VO-BJ-3254
171419811	VO-ES-3226
171419821	VO-AX-3225
171513333	VO-SB-10061
175422831	K150029
191407151A	VO-WP-8209
191407151B	VO-WP-8209
191407151B	VO-WP-8210
191407153A	VO-WP-8210
191407181D	VO-SB-1358
191407181E	VO-SB-1358
191407182	VO-SB-1329

...SEAT	MOOG
191407190A	VO-SB-7418
191407365A	VO-BJ-7108
191411314	VO-SB-6725
191411315	VO-LS-1516
191411315A	SE-LS-2850
191411315B	VO-LS-1516
191411329	VO-SB-7958
191412329	VO-SB-4861
191419803	VO-DS-7142
191419803A	VO-DS-7142
191419804	VO-DS-7105
191419804A	VO-DS-7105
191419811	VO-ES-7139
191419812	VO-ES-7106
191419812	VO-ES-7139
191419812	VO-ES-8246
191419821	VO-AX-7107
191419831	K150024
191422803	VO-DS-7137
191422803A	VO-DS-7137
191422804	VO-DS-7140
191422804A	VO-DS-7140
191422821A	VO-AX-7138
191422831	K150029
191501541	VO-SB-1189
191512119	VO-SB-10057
191512333	VO-SB-10061
191512335	VO-SB-10061
191512339	VO-SB-10061
191512340	VO-SB-10061
1H0407151	VO-WP-8221
1H0407151	VO-WP-8254
1H0407151A	VO-WP-0530
1H0407152	VO-WP-0529
1H0407365	VO-BJ-7184
1H0411314	VO-SB-6788
1H0412365A	VO-SB-10053
1H0419803A	VO-DS-7180
1H0419804A	VO-DS-7182
1H0419821	VO-AX-7181
1H0422803 (-)	VO-AX-8286
1H0422803A	VO-DS-7190
1H0422803A (-)	VO-AX-7183
1H0422803B	VO-DS-8204
1H0422803B (-)	VO-AX-0383
1H0422804 (-)	VO-AX-8286
1H0422804A	VO-DS-7191
1H0422804B	VO-DS-8205
1H0422831	K150029
1H0422831B	K150094
1H0501541	VO-SB-4169
1H0501541A	VO-SB-4169
1H9501541	VO-SB-4445
1J0199429	VO-SB-4523
1J0407151A	VO-WP-1552
1J0407151A	VO-WP-1553

...SEAT	MOOG
1J0407151B	VO-WP-1552
1J0407151B	VO-WP-1553
1J0407151C	VO-WP-1552
1J0407151C	VO-WP-1553
1J0407181	VO-SB-1369
1J0407181A	VO-SB-1369
1J0407365A	VO-BJ-8287
1J0407365B	VO-BJ-8287
1J0407365C	VO-BJ-8287
1J0407365D	VO-BJ-8287
1J0407365H	VO-BJ-8287
1J0407365J	VO-BJ-8287
1J0407366A	VO-BJ-8288
1J0407366B	VO-BJ-8288
1J0407366C	VO-BJ-8288
1J0407366D	VO-BJ-8288
1J0407366H	VO-BJ-8288
1J0411314	VO-SB-6818
1J0411314C	AU-SB-4847
1J0411314G	VO-SB-6796
1J0411314P	VO-SB-7422
1J0411314R	VO-SB-13250
1J0411314S	VO-SB-6818
1J0411314T	VO-SB-6796
1J0411315	VO-LS-0475
1J0411315	VO-LS-4916
1J0411315B	VO-LS-0475
1J0411315B	VO-LS-4916
1J0411315C	VO-LS-0475
1J0411315C	VO-LS-4916
1J0411315D	VO-LS-2406
1J0411315E	VO-LS-0475
1J0411315G	VO-LS-0475
1J0411315H	VO-LS-0475
1J0411315H	VO-LS-7327
1J0411315J	VO-LS-0475
1J0411315J	VO-LS-4916
1J0411316D	VO-LS-0456
1J0411327	VO-SB-14628
1J0412249	VO-SB-10052
1J0412249	VO-SB-10053
1J0412249	VO-SB-10067
1J0412331B	VO-SB-10053
1J0412331C	VO-SB-10053
1J0422803A	VO-DS-8281
1J0422803B	VO-AX-13741
1J0422803B	VO-DS-1549
1J0422803B	VO-RK-15029
1J0422803B	VO-RK-15052
1J0422803B	VO-RK-15061
1J0422803E	VO-DS-1549
1J0422803H	VO-DS-1549
1J0422804A	VO-DS-8284
1J0422804B	VO-AX-13741
1J0422804B	VO-DS-1548
1J0422804E	VO-DS-1548

...SEAT	MOOG
1J0422804H	VO-DS-1548
1J0422807B	VO-RK-15029
1J0422807B	VO-RK-15052
1J0422807B	VO-RK-15061
1J0422807E	VO-RK-15029
1J0422807E	VO-RK-15052
1J0422807E	VO-RK-15061
1J0422811A	VO-ES-8283
1J0422811B	VO-ES-1507
1J0422811E	VO-ES-1507
1J0422812A	VO-ES-8285
1J0422812B	VO-ES-1506
1J0422812B	VO-ES-8285
1J0422812E	VO-ES-1506
1J0422821B	VO-AX-13741
1J0422821B	VO-RK-15029
1J0422821B	VO-RK-15052
1J0422821B	VO-RK-15061
1J0422831	K150182
1J0422831B	K150182
1J0422831B	K150231
1J0501541C	VO-SB-0042
1J0501541D	VO-SB-4857
1J0505145A	VO-SB-10130
1J0505145B	VO-SB-10130
1J0505171B	VO-SB-10131
1J0505203	VO-SB-10179
1J0505365D	VO-SB-10179
1J0505365K	VO-SB-10179
1J0505365L	VO-SB-10179
1J0505365N	VO-SB-10179
1J0505466B	VO-LS-3680
1J0505466C	AU-LS-4193
1J0513353B	VO-SB-10063
1J0513353C	VO-SB-10063
1J0513353D	VO-SB-10063
1J0513353G	VO-SB-10063
1J0411315C	VO-LS-0475
1K0199231G	VO-SB-0430
1K0199231J	VO-SB-0430
1K0199232G	VO-SB-2337
1K0199232J	VO-SB-2337
1K0407151AA	VO-WP-1862
1K0407151AB	VO-WP-1862
1K0407151AC	VO-WP-1865
1K0407151AD	VO-WP-1865
1K0407151AK	VO-WP-1865
1K0407151BB	VO-WP-13307
1K0407151BC	VO-WP-1862
1K0407151BE	VO-WP-13307
1K0407151BG	VO-WP-13307
1K0407151M	VO-WP-1865
1K0407151N	VO-WP-1862
1K0407151P	VO-WP-1862
1K0407151Q	VO-WP-1862
1K0407151R	VO-WP-1865

...SEAT	MOOG
1K0407152AA	VO-WP-1861
1K0407152AB	VO-WP-1861
1K0407152AC	VO-WP-1864
1K0407152AD	VO-WP-1864
1K0407152AK	VO-WP-1864
1K0407152BB	VO-WP-13308
1K0407152BC	VO-WP-1861
1K0407152BE	VO-WP-13308
1K0407152BG	VO-WP-13308
1K0407152M	VO-WP-1864
1K0407152P	VO-WP-1861
1K0407152Q	VO-WP-1861
1K0407152R	VO-WP-1864
1K0407182	VO-SB-0428
1K0407182A	VO-SB-0428
1K0407183E	SE-SB-0104
1K0407183M	VO-SB-10844
1K0407365B	VO-BJ-1860
1K0407365C	VO-BJ-1860
1K0407365E	VO-BJ-1860
1K0407366B	VO-BJ-1859
1K0407366C	VO-BJ-1859
1K0407366E	VO-BJ-1859
1K0411315B	VO-LS-1870
1K0411315J	VO-LS-1870
1K0411315K	VO-LS-1870
1K0411315P	VO-LS-1870
1K0411315R	VO-LS-1870
1K0423810A	VO-AX-1867
1K0423810A	VO-RK-15071
1K0423811A	VO-ES-1868
1K0423811B	VO-ES-1868
1K0423811C	VO-ES-10703
1K0423811C	VO-ES-1868
1K0423811D	VO-ES-10703
1K0423811E	VO-ES-10703
1K0423811E	VO-ES-1868
1K0423811F	VO-ES-1868
1K0423811G	VO-ES-10703
1K0423811G	VO-ES-1868
1K0423811J	VO-ES-10703
1K0423811J	VO-ES-1868
1K0423811K	VO-ES-10703
1K0423811K	VO-ES-1868
1K0423812A	VO-ES-1869
1K0423812B	VO-ES-1869
1K0423812C	VO-ES-10704
1K0423812D	VO-ES-10704
1K0423812E	VO-ES-10704
1K0423812E	VO-ES-1869
1K0423812F	VO-ES-1869
1K0423812G	VO-ES-10704
1K0423812G	VO-ES-1869
1K0423812J	VO-ES-10704
1K0423812J	VO-ES-1869
1K0423812K	VO-ES-10704

...SEAT	MOOG
1K0423812K	VO-ES-1869
1K0426811E	VO-ES-1868
1K0501529E	VO-LS-0584
1K0501529F	VO-LS-0584
1K0501529H	VO-LS-0584
1K0501529J	VO-LS-0584
1K0501530B	VO-LS-2205
1K0501530C	VO-LS-2205
1K0501541C	VO-SB-7914
1K0505145E	VO-SB-8447
1K0505145F	VO-SB-8448
1K0505145G	VO-SB-8447
1K0505145H	VO-SB-8448
1K0505145J	VO-SB-8447
1K0505145K	VO-SB-8448
1K0505171C	VO-SB-7916
1K0505173C	VO-SB-7916
1K0505203A	VO-SB-8812
1K0505223E	VO-TC-10775
1K0505223H	VO-TC-10775
1K0505223K	VO-TC-10775
1K0505224E	VO-TC-10776
1K0505224H	VO-TC-10776
1K0505224K	VO-TC-10776
1K0505279A	VO-SB-8811
1K0505311AA	VO-TC-8737
1K0505311AB	VO-TC-8737
1K0505311J	VO-TC-8737
1K0505311R	VO-TC-8737
1K0505311S	VO-TC-8737
1K0505311T	VO-TC-8737
1K0505323H	VO-TC-0586
1K0505323N	VO-TC-0586
1K0505465AA	VO-LS-0418
1K0505465C	VO-LS-0418
1K0505465C (-)	VO-SB-15105
1K0505465J	VO-LS-0418
1K0505465J (-)	VO-SB-15105
1K0505465K	VO-LS-0418
1K0505465K (-)	VO-SB-15105
1K0505541C	VO-SB-4930
1K0505541D	VO-SB-4930
1K0505543A	VO-SB-7915
1K0505553	VO-SB-12548
1K0505553	VO-SB-7880
1K0505553A	VO-SB-12548
1K0505553A	VO-SB-7880
1K0511327AQ	VO-SB-8444
1K0511327AR	VO-SB-7199
1K0511327AS	VO-SB-7897
1K0511327BA	VO-SB-13843
1K0511439E	VO-SB-7171
1K0513353G	VO-SB-10089
1K0513353H	VO-SB-10090
1K0513353J	VO-SB-10091
1K0513353R	VO-SB-10091

...SEAT	MOOG
1S0407151	VO-WP-13471
1S0407152	VO-WP-13472
1S0423810A	VO-AX-12501
1S0423811A	VO-ES-13341
1S0423812A	VO-ES-13342
1T0505223F	VO-TC-14579
1T0505224F	VO-TC-14580
21156110A	SE-TC-4091
21156110B	SE-TC-7509
251407077	VO-SB-3223
251407175	VO-SB-4471
251407179	VO-SB-4466
251407183	VO-SB-4475
251407187B	VO-BJ-3269
251407361	VO-BJ-3270
251419081	VO-SB-4515
251419803	VO-DS-3266
251419803A (-)	VO-AX-3268
281407077	VO-SB-3076
281407179	VO-SB-3081
281407180	VO-SB-3044
281407187	VO-BJ-3245
281407361B	VO-BJ-3246
281411045	VO-SB-4535
281415303B	VO-DS-3233
281415701	VO-ES-3241
281415711A	VO-ES-3242
281415801	VO-DS-0796
281415801D (-)	VO-ES-1835
281415802	VO-DL-3253
281415811	VO-ES-3239
281415812	VO-ES-3240
291415711D	VO-ES-7125
2D0 407 140	ME-SB-2336
2D0511413B	ME-SB-7898
2E0411041C	ME-SB-7893
2H0407021B	VO-WP-13729
2H0407021B (-)	VO-BJ-13732
2H0407022B	VO-WP-13730
2H0407022B (-)	VO-BJ-13732
2H0407077A	VO-SB-13737
2H0407151A	VO-BJ-13732
2H0407151A	VO-BJ-13733
2H0407151A	VO-WP-13727
2H0407152A	VO-BJ-13732
2H0407152A	VO-BJ-13733
2H0407152A	VO-WP-13728
2H0407182A	VO-SB-13735
2H0407183A	VO-SB-13734
2H0411317	VO-LS-13724
2H0412333A	VO-SB-13736
2K0505465B	VO-LS-3980
2K0511413A	VO-SB-7892
2K0511413C	VO-SB-7892
2K0511413D	VO-SB-7892
321419811	VO-ES-3026

...SEAT	MOOG
321501541	VO-SB-4478
321512117	VO-SB-10057
321512117	VO-SB-10059
321512335	VO-SB-10057
333512143A	VO-SB-10059
357407151	VO-WP-0232
357407182	VO-SB-1329
357407182F	VO-SB-1329
357407356A	VO-BJ-7154
357407365	VO-BJ-7154
357407365A	VO-BJ-7154
357411313A	VO-SB-6798
357411314A	VO-SB-6735
357411315A	VO-LS-1165
357411315C	VO-LS-1088
357412249	VO-SB-10067
357412319B	VO-SB-10067
357412329	VO-SB-10056
357412331A	VO-SB-10067
357419803	VO-DS-7155
357419803A (-)	VO-AX-7157
357419804	VO-DS-7156
357422803	VO-DS-8266
357422803 (-)	VO-AX-7159
357422831A	K150094
357501541A	VO-SB-3052
357512333	VO-SB-10057
357512333C	VO-SB-10059
357512335B	VO-SB-10059
3A0422803C	VO-DS-8264
3A0422803E	VO-DS-0771
3A0422804C	VO-DS-8265
3A0422811	VO-ES-7139
3A0422812	VO-ES-7106
3A0422812	VO-ES-8246
3B0513353	VO-SB-10064
3B7412377A	VO-SB-10065
3C0199231A	VO-SB-5010
3C0199231B	VO-SB-5010
3C0199231D	VO-SB-5010
3C0199231E	VO-SB-5010
3C0407151A	VO-WP-5008
3C0407151A	VO-WP-5009
3C0407151B	VO-WP-5008
3C0407151B	VO-WP-5009
3C0407151E	VO-WP-5008
3C0407151E	VO-WP-5009
3C0407151G	VO-WP-5008
3C0407151G	VO-WP-5009
3C0407365A	VO-BJ-5011
3C0407365B	VO-BJ-5011
3C0407366A	VO-BJ-5012
3C0407366B	VO-BJ-5012
3C0505223C	VO-TC-14977
3C0505223E	VO-TC-14977
3C0505224C	VO-TC-14978

...SEAT	MOOG
3C0505224E	VO-TC-14978
3C0505541	VO-SB-10574
3C0513353	VO-SB-10089
3C0513353C	VO-SB-10091
3R0505323	VO-TC-13241
3R0505324	VO-TC-13242
4239458	K150001
4239459	K150001
4254520	FI-ES-0252
4289458	K150001
4311667	FI-AX-3113
4318655	FI-AX-3113
4322913	FI-AX-3105
4371155	K150001
4371156	K150001
4402277	FI-ES-3119
4402360	FI-TC-4063
4402361	FI-TC-4063
4402649	FI-BJ-3118
4402672	FI-TC-4674
4408138	FI-TC-4673
443419811B	AU-ES-7149
443419812B	AU-ES-7150
443505351P	AU-TC-7207
443505352P	AU-TC-7219
443511247D	AU-SB-4488
443512331	AU-SB-9328
4A0399415	AU-SB-4525
4A0407151	AU-TC-8200
4A0407152	AU-TC-8201
4A0407181	AU-SB-1037
4A0407183D	AU-SB-1097
4A0411327	AU-SB-1722
4A0411327F	AU-SB-3200
4A0412377CS	AU-SB-8995
4A0419801A	AU-DS-8231
4A0419802A	AU-DS-8232
4A0419811A	AU-ES-8206
4A0419812A	AU-ES-8207
4A0505389	VO-LS-2421
4A0511247	AU-SB-4484
4A0511247B	AU-SB-4508
4A0511249	AU-SB-4500
4B0407515	VO-SB-1362
4B0501521E	VO-SB-8445
4B0501522E	VO-SB-8446
4B0511327	AU-SB-13374
4B3407151C	AU-TC-0723
4B3498998	VO-RK-7925
4D0407151A	VO-TC-8228
4D0407151C	VO-SB-1363
4D0407181H	VO-SB-1366
4D0407182E	VO-SB-1365
4D0407182G	VO-SB-1365
4D0407183AB	VO-SB-1364
4D0407183AC	VO-SB-1364

...SEAT	MOOG
4D0407183M	VO-SB-1364
4D0407183N	VO-SB-1364
4D0407183Q	VO-SB-1364
4D0407505H	AU-TC-8239
4D0407509K	AU-TC-0674
4D0407510K	AU-TC-0678
4D0407515C	VO-SB-1362
4D0407516C	VO-SB-1363
4D0407693E	VO-TC-8229
4D0407693H	VO-TC-8229
4D0407694E	VO-TC-8230
4D0407694H	VO-TC-8230
4D0411317D	VO-LS-0157
4D0411317K	AU-LS-14840
4D0411327E	VO-SB-6748
4D0411327F	VO-SB-6749
4D0411327G	VO-SB-6748
4D0411327H	VO-SB-6749
4D0411327J	AU-SB-7912
4D0412369A	AU-SB-9515
4D0412377F	VO-SB-10060
4D0419801B (-)	VO-AX-8291
4D0419801B (-)	VO-RK-15046
4D0419801B (-)	VO-RK-15049
4D0419801B (-)	VO-RK-15050
4D0419801B (-)	VO-RK-15064
4D0419801B (-)	VO-RK-15065
4D0419801C	VO-DS-8226
4D0419801C (-)	VO-AX-8291
4D0419801C (-)	VO-RK-15046
4D0419801C (-)	VO-RK-15049
4D0419801C (-)	VO-RK-15050
4D0419801C (-)	VO-RK-15064
4D0419801C (-)	VO-RK-15065
4D0419811G	VO-ES-8227
4D0501529A	VO-LS-2419
4D0505465D	VO-LS-8240
4D0505547C	AU-LS-8241
4D0505548C	AU-LS-8242
4D0511523C	AU-SB-4479
4E0407151G	AU-TC-5062
4E0407182C	AU-SB-4844
4E0407505B	VO-TC-4932
4E0407506B	VO-TC-4933
4E0407509B	VO-TC-4935
4E0407510B	VO-TC-4936
4E0407693F	AU-TC-5063
4E0407694F	AU-TC-5064
4E0411317E	AU-LS-4934
4E0419801C	AU-DS-5061
4E0419811B	AU-ES-4918
4E0419811C	AU-ES-4918
4E0419811D	AU-ES-4918
4E0419821	AU-AX-4428
4E0419831	K150233
4E0501529C	AU-TC-5065

...SEAT	MOOG
4E0501529D	AU-TC-5065
4E0505547A	AU-LS-5067
4E0505548A	AU-LS-5068
4F0 505 145	AU-SB-7443
4F0407151	AU-TC-4937
4F0407183A	AU-SB-4843
4F0407183C	AU-SB-10586
4F0407183E	AU-SB-10586
4F0407183E	AU-SB-4843
4F0407693B	AU-TC-4945
4F0407694B	AU-TC-4946
4F0419811C	AU-ES-3839
4F0419811D	AU-ES-3839
4F0422821	AU-AX-4712
4F0498811A	AU-ES-3839
4F0501529C	AU-TC-5479
4F0505145A	AU-SB-7444
4F0505465N	AU-LS-5421
4F0505465P	AU-LS-5475
4F0-513-353A	VO-SB-10977
4F0-513-353B	VO-SB-10977
4F0-513-353C	VO-SB-10977
4F0-513-353D	VO-SB-10977
4G0407689A	AU-BJ-13260
4G0423810A	AU-AX-12545
4G0423811A	AU-ES-10907
4G0423812A	AU-ES-10908
4H0407515A	AU-SB-10693
4H0407689	AU-BJ-13655
4H0407689A	AU-BJ-13655
4H0411317A	AU-LS-8351
4H0422817A	AU-ES-13647
4H0422818A	AU-ES-13648
4M0411317	AU-LS-10678
4Z7698507	VO-SB-10060
5104065AA	ME-SB-7982
535411315	VO-DS-7187
561407151A	VO-WP-13657
561407151C	VO-WP-13657
561407152A	VO-WP-13658
561407152C	VO-WP-13658
561423810	VO-AX-13381
5960036	FI-ES-4082
5960037	FI-ES-4082
5960321	FI-AX-4080
5960834	FI-ES-4085
5995503	FI-TC-4673
5C0407151A	VO-WP-10817
5C0407151B	VO-WP-10817
5C0407152A	VO-WP-10818
5C0407152B	VO-WP-10818
5Q0 501 529 B (-)	VO-SB-14577
5Q0 501 529 C (-)	VO-SB-14577
5Q0407151J	VO-WP-13839
5Q0407151J+	VO-WP-13841
5Q0407151L	VO-WP-13839

...SEAT	MOOG
5Q0407151L+	VO-WP-13841
5Q0407151M	VO-WP-13839
5Q0407151M+	VO-WP-13841
5Q0407151R	VO-WP-13839
5Q0407151R+	VO-WP-13841
5Q0407152J	VO-WP-13840
5Q0407152J+	VO-WP-13842
5Q0407152L	VO-WP-13840
5Q0407152L+	VO-WP-13842
5Q0407152M	VO-WP-13840
5Q0407152M+	VO-WP-13842
5Q0407152R	VO-WP-13840
5Q0407152R+	VO-WP-13842
5Q0407182	VO-SB-13743
5Q0407182A	VO-SB-13743
5Q0407182F	VO-SB-13656
5Q0407183E	VO-SB-13656
5Q0407365A	VO-BJ-13581
5Q0407366A	VO-BJ-13582
5Q0411315B	VO-LS-13963
5Q0501529C (-)	VO-SB-14578
5Q0505323C	VO-TC-0586
5Q0505465C	VO-LS-13744
5Q0505543B	VO-SB-14578
5U0407365A	VO-BJ-7927
5U0407366A	VO-BJ-7926
5U0422811A	AU-ES-3721
607060026	K150026
6C0423810A	VO-AX-14746
6C0423810B	VO-AX-14746
6C0423810C	VO-AX-14746
6C0423811A	VO-ES-14747
6C0423812A	VO-ES-14748
6E0411315	VO-LS-4931
6E0419811	VO-ES-0510
6E0419811	VO-ES-0511
6E0419812	VO-ES-0510
6E0419812	VO-ES-0511
6E0419831	K150083
6E0419831	K150187
6K0411315	VO-LS-6994
6K0422803	VO-DS-1511
6K0422803A	VO-DS-1511
6K0422803A (-)	VO-AX-7107
6K0422803B	VO-AX-7138
6K0422803B	VO-DS-7333
6K0422803D	VO-DS-1511
6K0422803D	VO-DS-1512
6K0422803E	VO-DS-7333
6K0422804	VO-DS-1512
6K0422804A	VO-DS-1512
6K0422804B	VO-DS-7334
6K0422804D	VO-DS-1511
6K0422804D	VO-DS-1512
6K0422804E	VO-DS-7334
6K0422811	VO-ES-0511

...SEAT	MOOG
6K0422812	VO-ES-0510
6K0501541A	VO-SB-7978
6N0407151	VO-WP-0235
6N0407151	VO-WP-0236
6N0407151A	VO-WP-1520
6N0407151B	VO-WP-0235
6N0407151B	VO-WP-0236
6N0407181	VO-SB-1368
6N0407182	VO-SB-1367
6N0407365	VO-BJ-8249
6N0407365A	VO-BJ-8248
6N0411315	VO-LS-0463
6N0411315A	VO-LS-3353
6N0411315B	VO-LS-3353
6N0411315C	VO-LS-0463
6N0411315D	VO-LS-3353
6N0411811	VO-ES-8247
6N0411812	VO-ES-8246
6N0412249C	VO-SB-10066
6N0412331	VO-SB-10052
6N0412331A	VO-SB-10052
6N0412331E	VO-SB-10068
6N0419803	VO-DS-8245
6N0419803 (-)	VO-AX-1282
6N0419804	VO-DS-8244
6N0419804 (-)	VO-AX-1282
6N0419811	VO-ES-8247
6N0419812	VO-ES-8246
6N0419831	K150081
6N0422803	VO-DS-3535
6N0422803 (-)	VO-AX-8275
6N0422803A	VO-DS-3535
6N0422804	VO-DS-3536
6N0422804 (-)	VO-AX-8275
6N0422804A	VO-DS-3536
6N0422811	VO-ES-8247
6N0422812	VO-ES-8246
6N0422821A	VO-AX-8275
6N0422831	K150083
6N0501541D	VO-SB-4482
6N0501541E	VO-SB-7978
6Q0407151DL	VO-WP-1116
6Q0407151DR	VO-WP-1989
6Q0407151E	VO-WP-1116
6Q0407151E	VO-WP-1989
6Q0407151L	VO-WP-1116
6Q0407151L	VO-WP-1989
6Q0407182A	SE-SB-0100
6Q0407183	SE-SB-0104
6Q0407183A	SE-SB-0104
6Q0407183B	SE-SB-0104
6Q0407365A	SK-BJ-0413
6Q0407365M	SK-BJ-0413
6Q0407366A	SK-BJ-0414
6Q0407366M	SK-BJ-0414
6Q0411314E	VO-SB-7419

...SEAT	MOOG
6Q0411314F	VO-SB-7161
6Q0411314J	VO-SB-7896
6Q0411314L	VO-SB-7896
6Q0411314M	VO-SB-7895
6Q0411314N	VO-SB-7419
6Q0411314P	VO-SB-7896
6Q0411314Q	VO-SB-7895
6Q0411314R	VO-SB-7419
6Q0411315A	VO-LS-0494
6Q0411315B	VO-LS-0494
6Q0411315C	VO-LS-0494
6Q0411315D	VO-LS-0494
6Q0411315E	VO-LS-0494
6Q0411315F	VO-LS-0494
6Q0411315G	VO-LS-0494
6Q0411315J	VO-LS-0494
6Q0411315N	VO-LS-0494
6Q0411315Q	VO-LS-0494
6Q0419803B	SK-DS-0415
6Q0419804B	SK-DS-0416
6Q0419811C	AU-ES-3721
6Q0419812C	AU-ES-3723
6Q0422804P	SK-DS-0416
6Q0423803B	SK-DS-0415
6Q0423803B (-)	SE-AX-0091
6Q0423803B (-)	VO-RK-15053
6Q0423803B (-)	VO-RK-15062
6Q0423803C	SK-DS-3992
6Q0423803E	SK-DS-0415
6Q0423803G	SK-DS-3992
6Q0423803P	SK-DS-0415
6Q0423804B	SK-DS-0416
6Q0423804C	SK-DS-3993
6Q0423804E	SK-DS-0416
6Q0423804G	SK-DS-3993
6Q0423804P	SK-DS-0416
6Q0423810C	VO-AX-12550
6Q0423811	AU-ES-3721
6Q0423811	VO-ES-1507
6Q0423811A	VO-ES-1507
6Q0423811C	AU-ES-3721
6Q0423811C	VO-ES-1507
6Q0423812	AU-ES-3723
6Q0423812	VO-ES-1506
6Q0423812A	VO-ES-1506
6Q0423812C	AU-ES-3723
6Q0423812C	VO-ES-1506
6Q0423821B	SE-AX-0091
6Q0423821B	VO-RK-15053
6Q0423821B	VO-RK-15062
6Q0423831A	K150234
6Q0423831D	K150235
6Q04238810C	SK-DS-3993
6Q04238812C	SK-DS-3993
6R0407151	VO-WP-8837
6R0407151A	VO-WP-8853

...SEAT	MOOG
6R0407151B	VO-WP-8853
6R0407151C	VO-WP-8853
6R0407151E	VO-WP-8837
6R0407151F	VO-WP-8853
6R0407152	VO-WP-8838
6R0407152A	VO-WP-8854
6R0407152B	VO-WP-8854
6R0407152C	VO-WP-8854
6R0407152E	VO-WP-8838
6R0407152F	VO-WP-8854
6R0407181B	AU-SB-7331
6R0407365	VO-BJ-7927
6R0407365A	VO-BJ-7927
6R0407365B	VO-BJ-7927
6R0407366	VO-BJ-7926
6R0407366A	VO-BJ-7926
6R0407366B	VO-BJ-7926
6R0411315	VO-LS-0494
6R0411315A	VO-LS-0494
6R0423803C	VO-AX-8759
6R0423803D	VO-AX-8759
6R0423804C	VO-AX-8759
6R0423804D	VO-AX-8759
6R0423810	VO-AX-8759
6R0423810A	VO-AX-8759
6R0423811	AU-ES-3721
6R0423811	VO-ES-1507
6R0423811A	AU-ES-3721
6R0423812	AU-ES-3723
6R0423812	VO-ES-1506
6RD423810	VO-AX-14749
6RD423811A	AU-ES-3721
6RD423812A	AU-ES-3723
6RU423810	VO-AX-14749
6U0407151B	SK-WP-0662
6U0407152B	SK-WP-0663
6U0407182	SK-SB-4031
6U0407503	SK-SB-4034
6U0407504	SK-SB-2852
6U0422807	SK-AX-2851
6U0422831	K150083
6X0407151A	VO-WP-0235
6X0407151A	VO-WP-0236
6X0407151A	VO-WP-1519
6X0407151A	VO-WP-1520
6X0411313	VO-SB-7147
6X0411313A	VO-SB-8813
6X0419803A (-)	VO-AX-1812
6X0419804A (-)	VO-AX-1812
6X0422803A (-)	VO-AX-1715
6X0422804A (-)	VO-AX-1715
6X0422811	VO-ES-0511
6X0422812	VO-ES-0510
701407077	VO-SB-4493
701407087	VO-SB-4492
701407151A	VO-TC-5117

...SEAT	MOOG
701407152A	VO-TC-5118
701407183	VO-SB-4463
701407187	VO-BJ-7192
701407361	VO-BJ-7193
701411041	VO-SB-7200
701411049	VO-LS-1087
701411049B	VO-LS-1089
701419803C	VO-DS-8211
701419803C (-)	VO-AX-8016
701419803C (-)	VO-RK-15030
701419803C (-)	VO-RK-15035
701419803D	VO-DS-2183
701419804C	VO-DS-8213
701419804D	VO-DS-1622
701419804F	VO-DS-0719
701419811A	VO-ES-8215
701419811B	VO-ES-8216
701419811C	VO-ES-8255
701419811E	VO-ES-0368
701419812	VO-ES-8217
701419812A	VO-ES-8218
701419812B	VO-ES-8000
701419812D	VO-ES-0369
702419803A (-)	VO-AX-8015
702419803D	VO-DS-0720
7200946	VO-BJ-0319
7201717	VO-SB-1212
7583242	K150001
7583243	K150001
7592476	LN-SB-6684
7601261	FI-TC-4674
7633721	FI-AX-3120
7669756	FI-ES-4082
7D0407140	VO-SB-4449
7D0407151A	VO-TC-10815
7D0407152A	VO-TC-10816
7D0407183	VO-SB-4452
7D0407361	VO-BJ-0370
7D0411045	VO-SB-4446
7E0407361	VO-BJ-1990
7E0412319	VO-SB-10087
7H0407151E	VO-WP-2316
7H0407152E	VO-WP-2317
7H0407182	VO-SB-13719
7H0407182A	VO-SB-2319
7H0407183	VO-SB-2318
7H0411313	VO-SB-2320
7H0411317	VO-LS-2311
7H0412249A	VO-SB-10087
7H0419803C (-)	VO-AX-2313
7H0422817B	VO-ES-2314
7H0422818B	VO-ES-2315
7H0501132A	VO-SB-13717
7H0511414	VO-SB-10877
7H5411313A	VO-SB-10550
7H5411313B	VO-SB-13583

...SEAT	MOOG
7H5511414	VO-SB-10878
7H5511414A	VO-SB-13288
7H8407361	VO-BJ-7050
7L0407021B	VO-WP-3071
7L0407077	VO-RK-4858
7L0407151C	VO-WP-3060
7L0407151E	VO-WP-3060
7L0407151H	VO-WP-3060
7L0407152C	VO-WP-3061
7L0407152E	VO-WP-3061
7L0407152H	VO-WP-3061
7L0407182E	VO-SB-5624
7L0407182G	VO-SB-12647
7L0407183A	VO-SB-5623
7L0411317	VO-LS-3053
7L0411317 (-)	AU-SB-7891
7L0412333A	VO-SB-3073
7L0422817B	VO-ES-3058
7L0422818B	VO-ES-3059
7L0422821	VO-AX-3054
7L0505323A	AU-TC-7888
7L0505323A (-)	AU-SB-7889
7L0505323A (-)	AU-SB-7890
7L0505397	AU-TC-8985
7L0505397 (-)	VO-SB-12546
7L0505398	AU-TC-10622
7L0505398 (-)	VO-SB-12546
7L0505465B	VO-LS-4397
7L0505466B	VO-LS-4398
7L8407151D	AU-TC-8355
7L8407151E	AU-TC-8355
7L8407151F	AU-TC-7887
7L8407151K	AU-TC-7887
7L8407152D	AU-TC-8356
7L8407152E	AU-TC-8356
7L8407152F	AU-TC-7886
7L8407152K	AU-TC-7886
7M0407151B	VO-WP-0450
7M0407151B	VO-WP-0451
7M0407152B	VO-WP-0450
7M0407152B	VO-WP-0451
7M0407181	VO-SB-1195
7M0407181A	VO-SB-1195
7M0407181A	VO-SB-1212
7M0407365A	VO-BJ-0319
7M0411031	FD-SB-6767
7M0411317C	VO-LS-0318
7M0411317D	VO-LS-0318
7M0422803F	VO-DS-8257
7M0422803G	VO-DS-8257
7M0422804F	VO-DS-8256
7M0422804G	VO-DS-8256
7M0422817A	VO-ES-8259
7M0422817B	VO-ES-8259
7M0422818	VO-ES-8258
7M0422818A	VO-ES-8258

...SEAT	MOOG
7M0422818B	VO-ES-8258
7M0422831B	K150084
7M0501541	VO-SB-1212
7M0505222B	VO-SB-8810
7M0511413A	VO-SB-6814
7M0511413B	VO-SB-13463
7M0511414C	VO-SB-13464
7M3407365A	VO-BJ-0319
7M3407365C	VO-BJ-0319
7M3411317	VO-LS-0318
7M3411317B	VO-LS-0318
7M3411317C	VO-LS-0318
7M3411317E	VO-LS-0318
7M3422803	VO-DS-8257
7M3422803A	VO-DS-8257
7M3422804	VO-AX-0358
7M3422804	VO-DS-8256
7M3422804	VO-RK-15009
7M3422804A	VO-DS-8256
7M3422817	VO-ES-8259
7M3422818	VO-ES-8258
7M3422831	K150084
7M3498317	VO-RK-1210
7P0407021	VO-TC-13465
7P0407077	VO-SB-13466
7P0407151C	AU-TC-7887
7P0407152C	AU-TC-7886
811407147B	VO-WP-0737
811407181	VO-SB-1359
811411327A	AU-SB-4470
811411327B	AU-SB-1602
811412323	AU-SB-9520
811412323C	AU-SB-9520
811412323D	AU-SB-9520
811412331	VO-SB-10056
811412365	AU-SB-9520
811419801C	VO-DS-3924
811419802J	VO-DS-3925
811419812B	AU-ES-3916
811511247	AU-SB-1136
823407181	AU-SB-1153
823407365E	VO-BJ-3030
823412355	VO-SB-10058
823512097	VO-SB-10059
82368166	K150001
855407365B	VO-BJ-3917
855407366A	VO-BJ-3918
857407147A	VO-WP-0132
857407148A	VO-WP-0131
857407181	VO-SB-1361
857407474	VO-SB-1360
861407151A	VO-TC-7162
861407151B	AU-TC-3035
861407183	VO-SB-1177
861411313	VO-SB-6633
861412323A	AU-SB-9519

...SEAT	MOOG
861419801C	VO-DS-3028
861511271	VO-SB-4468
861719812	VO-ES-3026
862419802	VO-DS-7122
871412323A	AU-SB-9519
871412323B	AU-SB-9519
871419801A	VO-DS-7121
871419802	VO-DS-7123
871511423	VO-SB-13631
893199415	AU-SB-4458
893199419	AU-SB-4461
893407365F	AU-BJ-7170
893407366B	AU-BJ-7177
893407366F	AU-BJ-7174
893407465A	AU-LS-7179
893411327E	AU-SB-6651
893419802	AU-DS-7197
895407147A	AU-WP-0154
895407148A	AU-WP-0155
895407365	AU-BJ-7175
895505389	AU-LS-3944
8A0199415B	AU-SB-4506
8A0199419	AU-SB-4469
8A0412323D	AU-SB-9520
8A0419812	AU-ES-3916
8A0501530B	AU-TC-1789
8A0501541	AU-SB-4448
8A0505465C	AU-LS-8295
8A0505466C	AU-LS-8296
8A0511247B	AU-SB-4489
8A0512333	AU-SB-9522
8A0512335	AU-SB-9522
8D0407505A	VO-TC-4000
8D0407505B	VO-TC-4000
8D0407505F	VO-TC-4000
8D0407505H	VO-TC-4000
8D0407505K	VO-TC-4000
8D0407506A	VO-TC-4001
8D0407506B	VO-TC-4001
8D0407506F	VO-TC-4001
8D0407506H	VO-TC-4001
8D0407506K	VO-TC-4001
8D0407507E	VO-TC-4000
8D0407509A	AU-TC-0674
8D0407509C	AU-TC-0674
8D0407509E	AU-TC-0674
8D0407509F	AU-TC-0674
8D0407510A	AU-TC-0678
8D0407510C	AU-TC-0678
8D0407510E	AU-TC-0678
8D0407510F	AU-TC-0678
8D0407515A	VO-SB-1362
8D0407515B	VO-SB-1362
8D0407515C	VO-SB-1362
8D0411317D	VO-LS-0357
8D0411317D (-)	VO-SB-10149

...SEAT	MOOG
8D0411318D	VO-LS-0356
8D0498998	VO-RK-5000
8D0501530	AU-DS-8294
8D0501541D	AU-SB-4455
8D0511327C	VO-SB-14966
8D0407505K	VO-TC-4000
8E0 513 353 D	VO-SB-10977
8E0407151R	VO-TC-0892
8E0407151RS2	VO-RK-5002
8E0407181B	AU-SB-8106
8E0407181C	AU-SB-8106
8E0407505A	VO-TC-4000
8E0407505C	AU-TC-6995
8E0407505E	AU-TC-6995
8E0407505P	AU-TC-6995
8E0407505P	VO-TC-4000
8E0407505Q	AU-TC-6995
8E0407506A	VO-TC-4001
8E0407506C	AU-TC-6996
8E0407506E	AU-TC-6996
8E0407506P	AU-TC-6996
8E0407506P	VO-TC-4001
8E0407506Q	AU-TC-6996
8E0407509A	AU-TC-0674
8E0407509C	AU-TC-6997
8E0407509E	AU-TC-6997
8E0407509P	AU-TC-0674
8E0407509P	AU-TC-6997
8E0407509Q	AU-TC-6997
8E0407510A	AU-TC-0678
8E0407510C	AU-TC-6998
8E0407510E	AU-TC-6998
8E0407510P	AU-TC-0678
8E0407510P	AU-TC-6998
8E0407510Q	AU-TC-6998
8E0407693AL	AU-TC-4696
8E0407693K	VO-TC-8229
8E0407694AL	AU-TC-4697
8E0407694AL	VO-TC-8229
8E0407694K	VO-TC-8230
8E0411317	AU-LS-3717
8E0411317 (-)	AU-SB-15103
8E0411318	AU-LS-3718
8E0411318 (-)	AU-SB-15103
8E0412377	AU-SB-9515
8E0419801B (-)	VO-AX-8291
8E0419801B (-)	VO-RK-15046
8E0419801B (-)	VO-RK-15049
8E0419801B (-)	VO-RK-15050
8E0419801B (-)	VO-RK-15064
8E0419801B (-)	VO-RK-15065
8E0422821C	VO-AX-8291
8E0422821C	VO-RK-15046
8E0422821C	VO-RK-15049
8E0422821C	VO-RK-15050
8E0422821C	VO-RK-15064

...SEAT	MOOG
8E0422821C	VO-RK-15065
8E0501529G	AU-TC-7917
8E0501529K	AU-TC-7917
8E0501529P	AU-TC-7917
8E0501537M	AU-SB-5481
8E0501538F	AU-SB-5485
8E0505145AP	AU-SB-9037
8E0505145AR	AU-SB-9031
8E0505145M	VO-SB-13502
8E0505172A	VO-SB-13506
8E0505185C	VO-SB-13505
8E0505203D	AU-SB-5236
8E0505323M	VO-TC-13241
8E0505324M	VO-TC-13242
8E0505465AF	VO-LS-2271
8E0505465C	AU-ES-3890
8E0505465D	AU-ES-3890
8E0505465E	AU-LS-3898
8E0505465G	AU-LS-3898
8E0511327A	VO-SB-14676
8E0511327D	AU-SB-14731
8E0599257K	AU-SB-5635
8E0513353B	VO-SB-10062
8E0513353D	VO-SB-10062
8J0199231	AU-SB-7755
8J0407151D + Ball Joint	AU-TC-5196
8J0407151D + Ball Joint	AU-TC-5197
8J0407365	AU-BJ-5194
8J0407366	AU-BJ-5195
8J0423810	AU-AX-5193
8J0423811	AU-ES-5191
8J0423812	AU-ES-5192
8K0407151B	AU-TC-7437
8K0407151C	AU-TC-7437
8K0407151D	AU-TC-7437
8K0407151F	AU-TC-12623
8K0407152B	AU-TC-7438
8K0407152C	AU-TC-7438
8K0407152D	AU-TC-7438
8K0407152F	AU-TC-12624
8K0407182A	AU-SB-7439
8K0407183A	AU-SB-7441
8K0407183D	AU-SB-13832
8K0407505A	AU-TC-7352
8K0407506A	AU-TC-7353
8K0407509A	AU-TC-7355
8K0407509B	AU-TC-7883
8K0407510A	AU-TC-7356
8K0407510B	AU-TC-7884
8K0407515	AU-SB-7357
8K0407689D	AU-BJ-7440
8K0407693F	AU-TC-8081
8K0407693K	AU-TC-8081
8K0407693N	AU-TC-8081
8K0407693T	AU-TC-10799
8K0407694K	AU-TC-8082

...SEAT	MOOG
8K0407694T	AU-TC-10800
8K0411317A	AU-LS-10678
8K0411317B	AU-LS-8044
8K0411317C	AU-LS-8351
8K0411317D	AU-LS-8351
8K0411317E	AU-LS-8351
8K0411327A	AU-SB-10798
8K0411327B	AU-SB-13386
8K0411327C	AU-SB-13742
8K0422817A	AU-ES-7377
8K0422818A	AU-ES-7378
8K0501529K	AU-TC-7373
8K0501529K (-)	AU-SB-12596
8K0501530K	AU-TC-7374
8K0501530K (-)	AU-SB-12596
8K0501541	AU-SB-12570
8K0505323F	AU-TC-7369
8K0505324F	AU-TC-7372
8K0505465E	AU-LS-7376
8K0505465E (-)	AU-SB-8107
8K0505465G	AU-LS-7376
8N0407151A	AU-TC-8869
8N0407151A	AU-WP-3948
8N0407152A	AU-TC-8870
8N0407152A	AU-WP-3949
8N0407181B	AU-SB-7331
8N0407182A	AU-SB-7256
8N0407365A	VO-BJ-2410
8N0407365B	VO-BJ-2410
8N0407365C	VO-BJ-2410
8N0422803A	AU-DS-0718
8N0422803A (-)	VO-AX-2409
8N0422804A	AU-DS-0717
8N0422804A (-)	VO-AX-2409
8N0422807	VO-AX-2409
8N0422807D	AU-AX-6982
8N0422811A	VO-ES-2405
8N0422812A	VO-ES-2404
8N0422831	K150182
8S0423810A	AU-AX-15387
8Z0407151J	VO-WP-2411
8Z0407152J	VO-WP-2412
8Z0407153L	VO-WP-2413
8Z0407153L	VO-WP-2414
8Z0407182C	AU-SB-3878
8Z0407183A	AU-SB-3879
8Z0411314B	AU-SB-7436
8Z0411315B	VO-LS-2422
8Z0423803C (-)	VO-AX-2408
8Z0423804C (-)	VO-AX-2408
8Z0423811A	AU-ES-10890
8Z0423812A	AU-ES-10889
8Z0501541	AU-SB-8039
95VW3A262BA	VO-SB-1195
9938779	K150026
9938779R	K150026

...SEAT	MOOG
9939574	K150001
99634306903	VO-LS-13587
99634307002	VO-LS-10912
HB16213101	K150001
HB16213200	K150001
N10218708	SK-DS-3993
N90113701	VO-SB-10057
SE021156110A	SE-TC-4091
SE021156110B	SE-TC-7509
SE022162406A	FI-ES-4082
SE022162449A	FI-AX-3120
SE028140104A	FI-TC-4673
SE028156110A	FI-TC-4674
SE127162410A	FI-ES-4079
SE127162449A	FI-AX-4080
SE138156110A	FI-TC-4063
SE141140104A	FI-BJ-13405
SE141140104A	FI-BJ-3118
SE141140104A	FI-BJ-7510
SE141156110A	FI-TC-4673
SE141162410A	FI-ES-4085
SE141162449A	FI-AX-4080

SKODA	MOOG
007350278N	SK-AX-0064
007350278P	SK-ES-8222
021156110A	SE-TC-4091
021156110B	SE-TC-7509
1001398	VO-AX-0358
1001398	VO-RK-15009
1001713	VO-SB-6814
1007602	VO-WP-0451
1009591	VO-LS-0318
1009649	VO-SB-6815
1012632	VO-WP-0450
1058378	VO-ES-8258
1058380	VO-ES-8259
113407361E	VO-BJ-0625
113415811C	VO-ES-0615
113415812C	VO-ES-0617
113415813D	VO-ES-9023
114509822	K150061
114509823	K150061
115420020	SK-WP-0661
115420021	SK-WP-0660
115420023	SK-WP-0661
115420024	SK-WP-0660
115420240	SK-BJ-8223
115422290	SK-SB-4031
115422291	SK-SB-5450
115500420	SK-AX-3884
115500440	SK-ES-8222
1233552	VO-DS-8257
1233553	VO-DS-8256
131405361E	VO-BJ-0609
131405371G	VO-BJ-0610

...SKODA	MOOG
131415812	VO-ES-0594
131415813D	VO-ES-0618
131415821A	VO-ES-0614
133407361	VO-BJ-3222
170419804A	VO-DS-3224
171407153D	VO-WP-5088
171407153D	VO-WP-5089
171407181A	VO-SB-1325
171407182D	VO-SB-1326
171407365C	VO-BJ-3227
171407365F	VO-BJ-3254
171419811	VO-ES-3226
171419821	VO-AX-3225
171513333	VO-SB-10061
191407151A (-)	VO-WP-8209
191407151B	VO-WP-8210
191407181D	VO-SB-1358
191407182	VO-SB-1329
191407190A	VO-SB-7418
191407365A	VO-BJ-7108
191411314	VO-SB-6725
191411315A	SE-LS-2850
191411315B	VO-LS-1516
191411329	VO-SB-7958
191412329	VO-SB-4861
191419803A	VO-DS-7142
191419804A	VO-DS-7105
191419811	VO-ES-7139
191419812	VO-ES-7106
191419821	VO-AX-7107
191422803A	VO-DS-7137
191422804	VO-DS-7140
191422821A	VO-AX-7138
191501541	VO-SB-1189
191512119	VO-SB-10057
191512333	VO-SB-10061
191512335	VO-SB-10061
191512339	VO-SB-10061
191512340	VO-SB-10061
1H0407151	VO-WP-8221
1H0407151	VO-WP-8254
1H0407151A	VO-WP-0530
1H0407152	VO-WP-0529
1H0407365	VO-BJ-7184
1H0411314	VO-SB-6788
1H0412365A	VO-SB-10053
1H0419803A	VO-DS-7180
1H0419804A	VO-DS-7182
1H0419821	VO-AX-7181
1H0422803 (-)	VO-AX-8286
1H0422803A	VO-DS-7190
1H0422803A (-)	VO-AX-7183
1H0422803B	VO-DS-8204
1H0422803B (-)	VO-AX-0383
1H0422804 (-)	VO-AX-8286
1H0422804A	VO-DS-7191

...SKODA	MOOG
1H0422804B	VO-DS-8205
1H0501541A	VO-SB-4169
1H9501541	VO-SB-4445
1J0199429	VO-SB-4523
1J0407151A	VO-WP-1552
1J0407151A	VO-WP-1553
1J0407151B	VO-WP-1552
1J0407151B	VO-WP-1553
1J0407151C	VO-WP-1552
1J0407151C	VO-WP-1553
1J0407181	VO-SB-1369
1J0407181A	VO-SB-1369
1J0407365A	VO-BJ-8287
1J0407365B	VO-BJ-8287
1J0407365C	VO-BJ-8287
1J0407365D	VO-BJ-8287
1J0407365H	VO-BJ-8287
1J0407365J	VO-BJ-8287
1J0407366A	VO-BJ-8288
1J0407366B	VO-BJ-8288
1J0407366C	VO-BJ-8288
1J0407366D	VO-BJ-8288
1J0407366H	VO-BJ-8288
1J0411314	VO-SB-6818
1J0411314C	AU-SB-4847
1J0411314G	VO-SB-6796
1J0411314P	VO-SB-7422
1J0411314R	VO-SB-13250
1J0411314S	VO-SB-6818
1J0411314T	VO-SB-6796
1J0411315	VO-LS-0475
1J0411315	VO-LS-4916
1J0411315B	VO-LS-0475
1J0411315B	VO-LS-4916
1J0411315C	VO-LS-0475
1J0411315C	VO-LS-4916
1J0411315D	VO-LS-2406
1J0411315E	VO-LS-0475
1J0411315G	VO-LS-0475
1J0411315H	VO-LS-7327
1J0411315J	VO-LS-0475
1J0411315J	VO-LS-4916
1J0411316D	VO-LS-0456
1J0411327	VO-SB-14628
1J0412249	VO-SB-10052
1J0412249	VO-SB-10053
1J0412249	VO-SB-10067
1J0412331B	VO-SB-10053
1J0412331C	VO-SB-10053
1J0422803	VO-DS-8281
1J0422803A	VO-DS-1549
1J0422803A	VO-DS-8281
1J0422803B	VO-AX-13741
1J0422803B	VO-DS-1549
1J0422803B	VO-RK-15029
1J0422803B	VO-RK-15052

...SKODA	MOOG
1J0422803B	VO-RK-15061
1J0422803E	VO-DS-1549
1J0422803H	VO-DS-1549
1J0422804	VO-DS-8284
1J0422804A	VO-DS-1548
1J0422804A	VO-DS-8284
1J0422804B	VO-AX-13741
1J0422804B	VO-DS-1548
1J0422804E	VO-DS-1548
1J0422804H	VO-DS-1548
1J0422807	VO-AX-8286
1J0422807A	VO-AX-8286
1J0422811A	VO-ES-8283
1J0422811B	VO-ES-1507
1J0422812	VO-ES-8285
1J0422812A	VO-ES-8285
1J0422812B	VO-ES-1506
1J0422812B	VO-ES-8285
1J0422821B	VO-AX-13741
1J0422821B	VO-RK-15029
1J0422821B	VO-RK-15052
1J0422821B	VO-RK-15061
1J0422831	K150182
1J0422831B	K150182
1J0422831B	K150231
1J0501541C	VO-SB-0042
1J0501541D	VO-SB-4857
1J0505145A	VO-SB-10130
1J0505145B	VO-SB-10130
1J0505171B	VO-SB-10131
1J0505203	VO-SB-10179
1J0505365D	VO-SB-10179
1J0505365K	VO-SB-10179
1J0505365L	VO-SB-10179
1J0505365N	VO-SB-10179
1J0505466B	VO-LS-3680
1J0505466C	AU-LS-4193
1J0513353B	VO-SB-10063
1J0513353C	VO-SB-10063
1J0513353D	VO-SB-10063
1J0513353G	VO-SB-10063
1K0199231G	VO-SB-0430
1K0199231J	VO-SB-0430
1K0199232G	VO-SB-2337
1K0199232J	VO-SB-2337
1K0407151AA	VO-WP-1862
1K0407151AC	VO-WP-1865
1K0407151AH	VO-WP-1862
1K0407151BB	VO-WP-13307
1K0407151BC	VO-WP-1862
1K0407151BE	VO-WP-13307
1K0407151BG	VO-WP-13307
1K0407151N	VO-WP-1862
1K0407151P	VO-WP-1862
1K0407151T	VO-WP-1865
1K0407152AA	VO-WP-1861

...SKODA	MOOG
1K0407152AC	VO-WP-1864
1K0407152AH	VO-WP-1861
1K0407152BB	VO-WP-13308
1K0407152BC	VO-WP-1861
1K0407152BE	VO-WP-13308
1K0407152BG	VO-WP-13308
1K0407152M	VO-WP-1864
1K0407152P	VO-WP-1861
1K0407152T	VO-WP-1864
1K0407182	VO-SB-0428
1K0407182A	VO-SB-0428
1K0407183E	SE-SB-0104
1K0407183M	VO-SB-10844
1K0407183P	VO-SB-10844
1K0407365B	VO-BJ-1860
1K0407365C	VO-BJ-1860
1K0407365E	VO-BJ-1860
1K0407366B	VO-BJ-1859
1K0407366C	VO-BJ-1859
1K0407366E	VO-BJ-1859
1K0411315B	VO-LS-1870
1K0411315J	VO-LS-1870
1K0411315K	VO-LS-1870
1K0411315P	VO-LS-1870
1K0411315R	VO-LS-1870
1K0423810A	VO-AX-1867
1K0423810A	VO-RK-15071
1K0423811C	VO-ES-10703
1K0423811C	VO-ES-1868
1K0423811D	VO-ES-10703
1K0423811E	VO-ES-1868
1K0423811G	VO-ES-10703
1K0423811G	VO-ES-1868
1K0423811J	VO-ES-10703
1K0423811J	VO-ES-1868
1K0423811K	VO-ES-10703
1K0423811K	VO-ES-1868
1K0423812C	VO-ES-10704
1K0423812C	VO-ES-1869
1K0423812D	VO-ES-10704
1K0423812E	VO-ES-1869
1K0423812G	VO-ES-10704
1K0423812G	VO-ES-1869
1K0423812J	VO-ES-10704
1K0423812J	VO-ES-1869
1K0423812K	VO-ES-10704
1K0423812K	VO-ES-1869
1K0501529E	VO-LS-0584
1K0501529F	VO-LS-0584
1K0501529H	VO-LS-0584
1K0501529J	VO-LS-0584
1K0501530B	VO-LS-2205
1K0501530C	VO-LS-2205
1K0501541C	VO-SB-7914
1K0505145E	VO-SB-8447
1K0505145F	VO-SB-8448

...SKODA	MOOG	...SKODA	MOOG	...SKODA	MOOG	...SKODA	MOOG
1K0505145G	VO-SB-8447	251407187B	VO-BJ-3269	357412249	VO-SB-10067	4A0505389	VO-LS-2421
1K0505145H	VO-SB-8448	251407361	VO-BJ-3270	357412319B	VO-SB-10067	4A0511247	AU-SB-4484
1K0505145J	VO-SB-8447	251419081	VO-SB-4515	357412329	VO-SB-10056	4A0511247B	AU-SB-4508
1K0505145K	VO-SB-8448	251419803	VO-DS-3266	357412331A	VO-SB-10067	4A0511249	AU-SB-4500
1K0505171C	VO-SB-7916	251419803A (-)	VO-AX-3268	357419803	VO-DS-7155	4B0407151	AU-TC-0723
1K0505173C	VO-SB-7916	281407077	VO-SB-3076	357419803A (-)	VO-AX-7157	4B0407515	VO-SB-1362
1K0505203A	VO-SB-8812	281407179	VO-SB-3081	357419804	VO-DS-7156	4B0419801E	VO-DS-8226
1K0505223E	VO-TC-10775	281407180	VO-SB-3044	357422803	VO-DS-8266	4B0419801M	VO-DS-8226
1K0505223H	VO-TC-10775	281407187	VO-BJ-3245	357422803 (-)	VO-AX-7159	4B0501521D	VO-SB-8445
1K0505223K	VO-TC-10775	281407361B	VO-BJ-3246	357501541A	VO-SB-3052	4B0501521E	VO-SB-8445
1K0505224E	VO-TC-10776	281411045	VO-SB-4535	357512333	VO-SB-10057	4B0501522D	VO-SB-8446
1K0505224H	VO-TC-10776	281415303B	VO-DS-3233	357512333C	VO-SB-10059	4B0501522E	VO-SB-8446
1K0505224K	VO-TC-10776	281415701	VO-ES-3241	357512335B	VO-SB-10059	4B0511327	AU-SB-13374
1K0505279A	VO-SB-8811	281415711A	VO-ES-3242	3A0422803C	VO-DS-8264	4B3407151A	AU-TC-0723
1K0505311AA	VO-TC-8737	281415801	VO-DS-0796	3A0422803E	VO-DS-0771	4B3407151C	AU-TC-0723
1K0505311AB	VO-TC-8737	281415801D (-)	VO-ES-1835	3A0422804C	VO-DS-8265	4B3407151E	AU-TC-0723
1K0505311J	VO-TC-8737	281415802	VO-DL-3253	3B0513353	VO-SB-10064	4B3407151K	AU-TC-0723
1K0505311R	VO-TC-8737	281415811	VO-ES-3239	3B7412377A	VO-SB-10065	4B3498998	VO-RK-7925
1K0505311S	VO-TC-8737	281415812	VO-ES-3240	3C0199231A	VO-SB-5010	4D0407151A	VO-TC-8228
1K0505311T	VO-TC-8737	291415711D	VO-ES-7125	3C0199231B	VO-SB-5010	4D0407151C	VO-SB-1363
1K0505323H	VO-TC-0586	2D0407140	ME-SB-2336	3C0199231D	VO-SB-5010	4D0407151E	VO-TC-8228
1K0505323N	VO-TC-0586	2D0511413B	ME-SB-7898	3C0407151A	VO-WP-5008	4D0407151G	VO-TC-8228
1K0505465AA	VO-LS-0418	2E0411041C	ME-SB-7893	3C0407151A	VO-WP-5009	4D0407151J	VO-TC-8228
1K0505465C	VO-LS-0418	2H0407021B	VO-WP-13729	3C0407151B	VO-WP-5008	4D0407151P	VO-TC-8228
1K0505465C (-)	VO-SB-15105	2H0407021B (-)	VO-BJ-13732	3C0407151B	VO-WP-5009	4D0407181F	VO-SB-1366
1K0505465J	VO-LS-0418	2H0407022B	VO-WP-13730	3C0407151E	VO-WP-5008	4D0407181H	VO-SB-1366
1K0505465J (-)	VO-SB-15105	2H0407022B (-)	VO-BJ-13732	3C0407151E	VO-WP-5009	4D0407182E	VO-SB-1365
1K0505465K	VO-LS-0418	2H0407077A	VO-SB-13737	3C0407365A	VO-BJ-5011	4D0407182G	VO-SB-1365
1K0505465K (-)	VO-SB-15105	2H0407151A	VO-BJ-13732	3C0407365B	VO-BJ-5011	4D0407183AB	VO-SB-1364
1K0505541C	VO-SB-4930	2H0407151A	VO-BJ-13733	3C0407366A	VO-BJ-5012	4D0407183AC	VO-SB-1364
1K0505541D	VO-SB-4930	2H0407151A	VO-WP-13727	3C0407366B	VO-BJ-5012	4D0407183P	VO-SB-1364
1K0505543A	VO-SB-7915	2H0407152A	VO-BJ-13732	3C0505223C	VO-TC-14977	4D0407183Q	VO-SB-1364
1K0505553	VO-SB-12548	2H0407152A	VO-BJ-13733	3C0505223E	VO-TC-14977	4D0407505H	AU-TC-8239
1K0505553	VO-SB-7880	2H0407152A	VO-WP-13728	3C0505224C	VO-TC-14978	4D0407509K	AU-TC-0674
1K0505553A	VO-SB-12548	2H0407182A	VO-SB-13735	3C0505224E	VO-TC-14978	4D0407510K	AU-TC-0678
1K0505553A	VO-SB-7880	2H0407183A	VO-SB-13734	3C0505541	VO-SB-10574	4D0407515C	VO-SB-1362
1K0511327AQ	VO-SB-8444	2H0411317	VO-LS-13724	3C0513353	VO-SB-10089	4D0407516C	VO-SB-1363
1K0511327AR	VO-SB-7199	2H0412333A	VO-SB-13736	3C0513353C	VO-SB-10091	4D0407693AC	VO-TC-8229
1K0511327AS	VO-SB-7897	2K0505465B	VO-LS-3980	443419811B	AU-ES-7149	4D0407693E	VO-TC-8229
1K0511327BA	VO-SB-13843	2K0511413A	VO-SB-7892	443419812B	AU-ES-7150	4D0407693H	VO-TC-8229
1K0511439E	VO-SB-7171	2K0511413C	VO-SB-7892	443505351P	AU-TC-7207	4D0407693K	VO-TC-8229
1K0513353G	VO-SB-10089	2K0511413D	VO-SB-7892	443505352P	AU-TC-7219	4D0407693M	VO-TC-8229
1K0513353H	VO-SB-10090	321419811	VO-ES-3026	443511247D	AU-SB-4488	4D0407693N	VO-TC-8229
1K0513353J	VO-SB-10091	321501541	VO-SB-4478	443512331	AU-SB-9328	4D0407694AC	VO-TC-8230
1K0513353R	VO-SB-10091	321512117	VO-SB-10057	4A0399415	AU-SB-4525	4D0407694E	VO-TC-8230
1S0407151	VO-WP-13471	321512117	VO-SB-10059	4A0407151	AU-TC-8200	4D0407694H	VO-TC-8230
1S0407152	VO-WP-13472	321512335	VO-SB-10057	4A0407152	AU-TC-8201	4D0407694K	VO-TC-8230
1S0423810A	VO-AX-12501	333512143A	VO-SB-10059	4A0407181	AU-SB-1037	4D0407694M	VO-TC-8230
1S0423811A	VO-ES-13341	357407151	VO-WP-0232	4A0407183D	AU-SB-1097	4D0407694N	VO-TC-8230
1S0423812A	VO-ES-13342	357407182	VO-SB-1329	4A0411327	AU-SB-1722	4D0411317D	VO-LS-0157
1T0505223F	VO-TC-14579	357407182F	VO-SB-1329	4A0411327F	AU-SB-3200	4D0411317K	AU-LS-14840
1T0505224F	VO-TC-14580	357407365	VO-BJ-7154	4A0412377CS	AU-SB-8995	4D0411327E	VO-SB-6748
251407077	VO-SB-3223	357411313A	VO-SB-6798	4A0419801A	AU-DS-8231	4D0411327F	VO-SB-6749
251407175	VO-SB-4471	357411314A	VO-SB-6735	4A0419802A	AU-DS-8232	4D0411327G	VO-SB-6748
251407179	VO-SB-4466	357411315A	VO-LS-1165	4A0419811A	AU-ES-8206	4D0411327H	VO-SB-6749
251407183	VO-SB-4475	357411315C	VO-LS-1088	4A0419812A	AU-ES-8207	4D0411327J	AU-SB-7912

...SKODA	MOOG
4D0412369A	AU-SB-9515
4D0412377F	VO-SB-10060
4D0419801B (-)	VO-AX-8291
4D0419801B (-)	VO-RK-15046
4D0419801B (-)	VO-RK-15049
4D0419801B (-)	VO-RK-15050
4D0419801B (-)	VO-RK-15064
4D0419801B (-)	VO-RK-15065
4D0419801C	VO-DS-8226
4D0419801C (-)	VO-AX-8291
4D0419801C (-)	VO-RK-15046
4D0419801C (-)	VO-RK-15049
4D0419801C (-)	VO-RK-15050
4D0419801C (-)	VO-RK-15064
4D0419801C (-)	VO-RK-15065
4D0419801E	VO-DS-8226
4D0419811G	VO-ES-8227
4D0419831B	K150141
4D0419831D	K150141
4D0419831E	K150141
4D0419831E	K150232
4D0419831K	K150141
4D0419831K	K150232
4D0501529A	VO-LS-2419
4D0505465D	VO-LS-8240
4D0505547C	AU-LS-8241
4D0505548C	AU-LS-8242
4D0511523C	AU-SB-4479
4E0407151G	AU-TC-5062
4E0407182C	AU-SB-4844
4E0407505B	VO-TC-4932
4E0407506B	VO-TC-4933
4E0407509B	VO-TC-4935
4E0407510B	VO-TC-4936
4E0407693F	AU-TC-5063
4E0407694F	AU-TC-5064
4E0411317E	AU-LS-4934
4E0419801C	AU-DS-5061
4E0419811B	AU-ES-4918
4E0419811C	AU-ES-4918
4E0419811D	AU-ES-4918
4E0419821	AU-AX-4428
4E0419831	K150233
4E0501529C	AU-TC-5065
4E0501529D	AU-TC-5065
4E0505547A	AU-LS-5067
4E0505548A	AU-LS-5068
4F0 505 145	AU-SB-7443
4F0407151	AU-TC-4937
4F0407183A	AU-SB-4843
4F0407183C	AU-SB-10586
4F0407693B	AU-TC-4945
4F0407694B	AU-TC-4946
4F0419811D	AU-ES-3839
4F0422821	AU-AX-4712
4F0501529C	AU-TC-5479

...SKODA	MOOG
4F0505145A	AU-SB-7444
4F0505465N	AU-LS-5421
4F0505465P	AU-LS-5475
4F0-513-353A	VO-SB-10977
4F0-513-353B	VO-SB-10977
4F0-513-353C	VO-SB-10977
4F0-513-353D	VO-SB-10977
4G0407689A	AU-BJ-13260
4G0423810A	AU-AX-12545
4G0423811A	AU-ES-10907
4G0423812A	AU-ES-10908
4H0407515A	AU-SB-10693
4H0407689	AU-BJ-13655
4H0407689A	AU-BJ-13655
4H0411317A	AU-LS-8351
4H0422817A	AU-ES-13647
4H0422818A	AU-ES-13648
4M0411317	AU-LS-10678
4Z7698507	VO-SB-10060
5104065AA	ME-SB-7982
535411315	VO-DS-7187
561407151A	VO-WP-13657
561407151C	VO-WP-13657
561407152A	VO-WP-13658
561407152C	VO-WP-13658
561423810	VO-AX-13381
5C0407151A	VO-WP-10817
5C0407151B	VO-WP-10817
5C0407152A	VO-WP-10818
5C0407152B	VO-WP-10818
5C0407183A	VO-SB-10844
5Q0 501 529 B (-)	VO-SB-14577
5Q0 501 529 C (-)	VO-SB-14577
5Q0407151J	VO-WP-13839
5Q0407151J+	VO-WP-13841
5Q0407151L	VO-WP-13839
5Q0407151L+	VO-WP-13841
5Q0407151M	VO-WP-13839
5Q0407151M+	VO-WP-13841
5Q0407151R	VO-WP-13839
5Q0407151R+	VO-WP-13841
5Q0407152J	VO-WP-13840
5Q0407152J+	VO-WP-13842
5Q0407152L	VO-WP-13840
5Q0407152L+	VO-WP-13842
5Q0407152M	VO-WP-13840
5Q0407152M+	VO-WP-13842
5Q0407152R	VO-WP-13840
5Q0407152R+	VO-WP-13842
5Q0407182	VO-SB-13743
5Q0407182A	VO-SB-13743
5Q0407183E	VO-SB-13656
5Q0407365A	VO-BJ-13581
5Q0407366A	VO-BJ-13582
5Q0411315B	VO-LS-13963
5Q0501529C (-)	VO-SB-14578

...SKODA	MOOG
5Q0505323C	VO-TC-0586
5Q0505465C	VO-LS-13744
5Q0505541A	VO-SB-4930
5Q0505543B	VO-SB-14578
5U0407365A	VO-BJ-7927
5U0407366A	VO-BJ-7926
5U0422811A	AU-ES-3721
6C0423810A	VO-AX-14746
6C0423810B	VO-AX-14746
6C0423810C	VO-AX-14746
6C0423811A	VO-ES-14747
6C0423812A	VO-ES-14748
6E0411315	VO-LS-4931
6E0419831	K150083
6E0419831	K150141
6E0419831	K150187
6E0419831	K150232
6K0411315	VO-LS-6994
6K0422803A (-)	VO-AX-7107
6K0422803B	VO-AX-7138
6K0422803D	VO-DS-1511
6K0422803E	VO-DS-7333
6K0422804D	VO-DS-1512
6K0422804E	VO-DS-7334
6K0501541A	VO-SB-7978
6N0407151	VO-WP-0235
6N0407151	VO-WP-0236
6N0407151A	VO-WP-1520
6N0407181	VO-SB-1368
6N0407182	VO-SB-1367
6N0407365	VO-BJ-8249
6N0407365A	VO-BJ-8248
6N0411315	VO-LS-0463
6N0411315A	VO-LS-3353
6N0411811	VO-ES-8247
6N0411812	VO-ES-8246
6N0412249C	VO-SB-10066
6N0412331	VO-SB-10052
6N0412331A	VO-SB-10052
6N0412331E	VO-SB-10068
6N0419803	VO-DS-8245
6N0419803 (-)	VO-AX-1282
6N0419804	VO-DS-8244
6N0422803 (-)	VO-AX-8275
6N0422803A	VO-DS-3535
6N0422804A	VO-DS-3536
6N0422831	K150083
6N0501541D	VO-SB-4482
6Q0407151D	VO-WP-1116
6Q0407151D + Ball Joint	VO-WP-1116
6Q0407151D + Ball Joint	VO-WP-1989
6Q0407151DL	VO-WP-1116
6Q0407151DR	VO-WP-1989
6Q0407151E	VO-WP-1116
6Q0407151E	VO-WP-1989
6Q0407151L	VO-WP-1116

...SKODA	MOOG
6Q0407151L	VO-WP-1989
6Q0407182A	SE-SB-0100
6Q0407183	SE-SB-0104
6Q0407183A	SE-SB-0104
6Q0407183B	SE-SB-0104
6Q0407365A	SK-BJ-0413
6Q0407365B	SK-BJ-0413
6Q0407365M	SK-BJ-0413
6Q0407366A	SK-BJ-0414
6Q0407366B	SK-BJ-0414
6Q0407366M	SK-BJ-0414
6Q0411314E	VO-SB-7419
6Q0411314F	VO-SB-7161
6Q0411314J	VO-SB-7896
6Q0411314L	VO-SB-7896
6Q0411314M	VO-SB-7895
6Q0411314N	VO-SB-7419
6Q0411314P	VO-SB-7896
6Q0411314Q	VO-SB-7895
6Q0411314R	VO-SB-7419
6Q0411315A	VO-LS-0494
6Q0411315B	VO-LS-0494
6Q0411315C	VO-LS-0494
6Q0411315D	VO-LS-0494
6Q0411315E	VO-LS-0494
6Q0411315F	VO-LS-0494
6Q0411315G	VO-LS-0494
6Q0411315J	VO-LS-0494
6Q0411315L	VO-LS-0494
6Q0411315N	VO-LS-0494
6Q0411315Q	VO-LS-0494
6Q0419803B	SK-DS-0415
6Q0419803D	SK-DS-0415
6Q0419803F	SK-DS-0415
6Q0419804B	SK-DS-0416
6Q0419804D	SK-DS-0416
6Q0419804F	SK-DS-0416
6Q0419811C	AU-ES-3721
6Q0419812C	AU-ES-3723
6Q0422804P	SK-DS-0416
6Q0423803B	SK-DS-0415
6Q0423803B (-)	SE-AX-0091
6Q0423803B (-)	VO-RK-15053
6Q0423803B (-)	VO-RK-15062
6Q0423803C	SK-DS-3992
6Q0423803E	SK-DS-0415
6Q0423803G	SK-DS-3992
6Q0423803P	SK-DS-0415
6Q0423804B	SK-DS-0416
6Q0423804C	SK-DS-3993
6Q0423804E	SK-DS-0416
6Q0423804G	SK-DS-3993
6Q0423804P	SK-DS-0416
6Q0423810C	SK-DS-3993
6Q0423810C	VO-AX-12550
6Q0423811	AU-ES-3721

...SKODA	MOOG
6Q0423811	VO-ES-1507
6Q0423811A	VO-ES-1507
6Q0423811C	AU-ES-3721
6Q0423811C	VO-ES-1507
6Q0423812	AU-ES-3723
6Q0423812	VO-ES-1506
6Q0423812A	VO-ES-1506
6Q0423812C	AU-ES-3723
6Q0423812C	VO-ES-1506
6Q0423821B	SE-AX-0091
6Q0423821B	VO-RK-15053
6Q0423821B	VO-RK-15062
6Q0423831D	K150235
6Q04238810C	SK-DS-3993
6Q04238812C	SK-DS-3993
6R0407151	VO-WP-8837
6R0407151A	VO-WP-8853
6R0407151C	VO-WP-8853
6R0407151E	VO-WP-8837
6R0407151F	VO-WP-8853
6R0407152	VO-WP-8838
6R0407152A	VO-WP-8854
6R0407152C	VO-WP-8854
6R0407152E	VO-WP-8838
6R0407152F	VO-WP-8854
6R0407181B	AU-SB-7331
6R0407365	VO-BJ-7927
6R0407365A	VO-BJ-7927
6R0407365B	VO-BJ-7927
6R0407366	VO-BJ-7926
6R0407366A	VO-BJ-7926
6R0407366B	VO-BJ-7926
6R0411315	VO-LS-0494
6R0411315A	VO-LS-0494
6R0423803C	VO-AX-8759
6R0423803D	VO-AX-8759
6R0423804C	VO-AX-8759
6R0423804D	VO-AX-8759
6R0423810	VO-AX-8759
6R0423810A	VO-AX-8759
6R0423811	AU-ES-3721
6R0423811	VO-ES-1507
6R0423811A	AU-ES-3721
6R0423812	AU-ES-3723
6R0423812	VO-ES-1506
6RD423810	VO-AX-14749
6RU423810	VO-AX-14749
6U0407151A	SK-WP-0662
6U0407151B	SK-WP-0662
6U0407152A	SK-WP-0663
6U0407152B	SK-WP-0663
6U0407182	SK-SB-4031
6U0407365	SK-BJ-8223
6U0407503	SK-SB-4034
6U0407504	SK-SB-2852
6U0422807	SK-AX-0064

...SKODA	MOOG
6U0422807	SK-AX-2851
6U0422811	SK-ES-8222
6U0422831	K150083
6X0407151A	VO-WP-1519
6X0411313	VO-SB-7147
6X0411313A	VO-SB-8813
6X0419803A (-)	VO-AX-1812
6X0422803A (-)	VO-AX-1715
6X0422811	VO-ES-0511
6X0422812	VO-ES-0510
701407077	VO-SB-4493
701407087	VO-SB-4492
701407151A	VO-TC-5117
701407152A	VO-TC-5118
701407183	VO-SB-4463
701407187	VO-BJ-7192
701407361	VO-BJ-7193
701411041	VO-SB-7200
701411049	VO-LS-1087
701411049B	VO-LS-1089
701419803C	VO-DS-8211
701419803C (-)	VO-AX-8016
701419803C (-)	VO-RK-15030
701419803C (-)	VO-RK-15035
701419803D	VO-DS-2183
701419804C	VO-DS-8213
701419804D	VO-DS-1622
701419804F	VO-DS-0719
701419811A	VO-ES-8215
701419811B	VO-ES-8216
701419811C	VO-ES-8255
701419811E	VO-ES-0368
701419812	VO-ES-8217
701419812A	VO-ES-8218
701419812B	VO-ES-8000
701419812D	VO-ES-0369
702419803A (-)	VO-AX-8015
702419803D	VO-DS-0720
7200946	VO-BJ-0319
7304446	SK-WP-0663
7304447	SK-WP-0662
7820040701	K150141
7820040701	K150232
7D0407140	VO-SB-4449
7D0407151A	VO-TC-10815
7D0407152A	VO-TC-10816
7D0407183	VO-SB-4452
7D0407361	VO-BJ-0370
7D0411045	VO-SB-4446
7E0407361	VO-BJ-1990
7E0412319	VO-SB-10087
7H0407151E	VO-WP-2316
7H0407152E	VO-WP-2317
7H0407182	VO-SB-13719
7H0407182A	VO-SB-2319
7H0407183	VO-SB-2318

...SKODA	MOOG
7H0411313	VO-SB-2320
7H0411317	VO-LS-2311
7H0412249A	VO-SB-10087
7H0419803C (-)	VO-AX-2313
7H0422817B	VO-ES-2314
7H0422818B	VO-ES-2315
7H0501132A	VO-SB-13717
7H0511414	VO-SB-10877
7H5411313A	VO-SB-10550
7H5411313B	VO-SB-13583
7H5511414	VO-SB-10878
7H5511414A	VO-SB-13288
7H8407361	VO-BJ-7050
7L0407021B	VO-WP-3071
7L0407077	VO-RK-4858
7L0407151C	VO-WP-3060
7L0407151E	VO-WP-3060
7L0407151H	VO-WP-3060
7L0407152C	VO-WP-3061
7L0407152E	VO-WP-3061
7L0407152H	VO-WP-3061
7L0407182E	VO-SB-5624
7L0407182G	VO-SB-12647
7L0407183A	VO-SB-5623
7L0411317	VO-LS-3053
7L0411317 (-)	AU-SB-7891
7L0412333A	VO-SB-3073
7L0422817B	VO-ES-3058
7L0422818B	VO-ES-3059
7L0422821	VO-AX-3054
7L0505323A	AU-TC-7888
7L0505323A (-)	AU-SB-7889
7L0505323A (-)	AU-SB-7890
7L0505397	AU-TC-8985
7L0505397 (-)	VO-SB-12546
7L0505398	AU-TC-10622
7L0505398 (-)	VO-SB-12546
7L0505465B	VO-LS-4397
7L0505466B	VO-LS-4398
7L8407151D	AU-TC-8355
7L8407151E	AU-TC-8355
7L8407151F	AU-TC-7887
7L8407151K	AU-TC-7887
7L8407152D	AU-TC-8356
7L8407152E	AU-TC-8356
7L8407152F	AU-TC-7886
7L8407152K	AU-TC-7886
7M0407181	VO-SB-1195
7M0501541	VO-SB-1212
7M0505222B	VO-SB-8810
7M0511414C	VO-SB-13464
7M3498317	VO-RK-1210
7P0407021	VO-TC-13465
7P0407077	VO-SB-13466
7P0407151C	AU-TC-7887
7P0407152C	AU-TC-7886

...SKODA	MOOG
811407147B	VO-WP-0737
811407181	VO-SB-1359
811411327A	AU-SB-4470
811411327B	AU-SB-1602
811412323	AU-SB-9520
811412323C	AU-SB-9520
811412323D	AU-SB-9520
811412331	VO-SB-10056
811412365	AU-SB-9520
811419801C	VO-DS-3924
811419802J	VO-DS-3925
811419812B	AU-ES-3916
811511247	AU-SB-1136
823407181	AU-SB-1153
823407365E	VO-BJ-3030
823412355	VO-SB-10058
823512097	VO-SB-10059
855407365B	VO-BJ-3917
855407366A	VO-BJ-3918
857407147A	VO-WP-0132
857407148A	VO-WP-0131
857407181	VO-SB-1361
857407474	VO-SB-1360
861407151A	VO-TC-7162
861407151B	AU-TC-3035
861407183	VO-SB-1177
861411313	VO-SB-6633
861412323A	AU-SB-9519
861419801C	VO-DS-3028
861511271	VO-SB-4468
861719812	VO-ES-3026
862419802	VO-DS-7122
871412323A	AU-SB-9519
871412323B	AU-SB-9519
871419801A	VO-DS-7121
871419802	VO-DS-7123
871511423	VO-SB-13631
893199415	AU-SB-4458
893199419	AU-SB-4461
893407365F	AU-BJ-7170
893407366B	AU-BJ-7177
893407366F	AU-BJ-7174
893407465A	AU-LS-7179
893411327E	AU-SB-6651
893419802	AU-DS-7197
895407147A	AU-WP-0154
895407148A	AU-WP-0155
895407365	AU-BJ-7175
895505389	AU-LS-3944
8A0199415B	AU-SB-4506
8A0199419	AU-SB-4469
8A0412323D	AU-SB-9520
8A0419812	AU-ES-3916
8A0501530B	AU-TC-1789
8A0501541	AU-SB-4448
8A0505465C	AU-LS-8295

...SKODA	MOOG
8A0505466C	AU-LS-8296
8A0511247B	AU-SB-4489
8A0512333	AU-SB-9522
8A0512335	AU-SB-9522
8D0407151E	VO-TC-8228
8D0407505A	VO-TC-4000
8D0407505B	VO-TC-4000
8D0407505F	VO-TC-4000
8D0407505H	VO-TC-4000
8D0407505K	VO-TC-4000
8D0407506A	VO-TC-4001
8D0407506B	VO-TC-4001
8D0407506F	VO-TC-4001
8D0407506H	VO-TC-4001
8D0407506K	VO-TC-4001
8D0407507E	VO-TC-4000
8D0407509A	AU-TC-0674
8D0407509C	AU-TC-0674
8D0407509E	AU-TC-0674
8D0407509F	AU-TC-0674
8D0407510A	AU-TC-0678
8D0407510C	AU-TC-0678
8D0407510E	AU-TC-0678
8D0407510F	AU-TC-0678
8D0407515A	VO-SB-1362
8D0407515B	VO-SB-1362
8D0407515C	VO-SB-1362
8D0411317D	VO-LS-0157
8D0411317D	VO-LS-0357
8D0411317D (-)	VO-SB-10149
8D0411318D	VO-LS-0356
8D0419831D	K150141
8D0419831J	K150141
8D0419831J	K150232
8D0419831K	K150141
8D0419831K	K150232
8D0498998	VO-RK-5000
8D0501530	AU-DS-8294
8D0501541D	AU-SB-4455
8D0511327C	VO-SB-14966
8E0 513 353 D	VO-SB-10977
8E0407151E	VO-TC-0892
8E0407151RS2	VO-RK-5002
8E0407181B	AU-SB-8106
8E0407181C	AU-SB-8106
8E0407505A	AU-TC-6995
8E0407505A	VO-TC-4000
8E0407505C	AU-TC-6995
8E0407506A	AU-TC-6996
8E0407506A	VO-TC-4001
8E0407506C	AU-TC-6996
8E0407509A	AU-TC-0674
8E0407509A	AU-TC-6997
8E0407509P	AU-TC-6997
8E0407510A	AU-TC-0678
8E0407510A	AU-TC-6998

...SKODA	MOOG
8E0407510P	AU-TC-6998
8E0407693	VO-TC-8229
8E0407693E	VO-TC-8229
8E0407693H	VO-TC-8229
8E0407693K	VO-TC-8229
8E0407693P	VO-TC-8229
8E0407693Q	VO-TC-8229
8E0407693T	AU-TC-4696
8E0407694	VO-TC-8230
8E0407694E	VO-TC-8230
8E0407694H	VO-TC-8230
8E0407694K	VO-TC-8230
8E0407694P	VO-TC-8230
8E0407694Q	VO-TC-8230
8E0407694T	AU-TC-4697
8E0411317	AU-LS-3717
8E0411317 (-)	AU-SB-15103
8E0411318	AU-LS-3718
8E0411318 (-)	AU-SB-15103
8E0412377	AU-SB-9515
8E0419801B (-)	VO-AX-8291
8E0419801B (-)	VO-RK-15046
8E0419801B (-)	VO-RK-15049
8E0419801B (-)	VO-RK-15050
8E0419801B (-)	VO-RK-15064
8E0419801B (-)	VO-RK-15065
8E0419811B	VO-ES-8227
8E0419831	K150141
8E0419831	K150232
8E0501521N	VO-SB-8445
8E0501522N	VO-SB-8446
8E0501529G	AU-TC-7917
8E0501529K	AU-TC-7917
8E0501529P	AU-TC-7917
8E0501537M	AU-SB-5481
8E0501538F	AU-SB-5485
8E0505145AP	AU-SB-9037
8E0505145AR	AU-SB-9031
8E0505145M	VO-SB-13502
8E0505172A	VO-SB-13506
8E0505185C	VO-SB-13505
8E0505203D	AU-SB-5236
8E0505323M	VO-TC-13241
8E0505324M	VO-TC-13242
8E0505465C	AU-ES-3890
8E0505465D	AU-ES-3890
8E0505465E	AU-LS-3898
8E0505465G	AU-LS-3898
8E0505465T	VO-LS-2271
8E0511327A	VO-SB-14676
8E0511327D	AU-SB-14731
8E0599257K	AU-SB-5635
8E0513353B	VO-SB-10062
8E0513353D	VO-SB-10062
8J0199231	AU-SB-7755
8J0407151D + Ball Joint	AU-TC-5196

...SKODA	MOOG
8J0407151D + Ball Joint	AU-TC-5197
8J0407365	AU-BJ-5194
8J0407366	AU-BJ-5195
8J0423810	AU-AX-5193
8J0423811	AU-ES-5191
8J0423812	AU-ES-5192
8K0407151B	AU-TC-7437
8K0407151C	AU-TC-7437
8K0407151D	AU-TC-7437
8K0407151F	AU-TC-12623
8K0407152B	AU-TC-7438
8K0407152C	AU-TC-7438
8K0407152D	AU-TC-7438
8K0407152F	AU-TC-12624
8K0407182A	AU-SB-7439
8K0407183A	AU-SB-7441
8K0407183D	AU-SB-13832
8K0407505A	AU-TC-7352
8K0407506A	AU-TC-7353
8K0407509A	AU-TC-7355
8K0407509B	AU-TC-7883
8K0407510A	AU-TC-7356
8K0407510B	AU-TC-7884
8K0407515	AU-SB-7357
8K0407689D	AU-BJ-7440
8K0407693F	AU-TC-8081
8K0407693K	AU-TC-8081
8K0407693N	AU-TC-8081
8K0407693T	AU-TC-10799
8K0407694K	AU-TC-8082
8K0407694T	AU-TC-10800
8K0411317A	AU-LS-10678
8K0411317B	AU-LS-8044
8K0411317C	AU-LS-8351
8K0411317D	AU-LS-8351
8K0411317E	AU-LS-8351
8K0411327A	AU-SB-10798
8K0411327B	AU-SB-13386
8K0411327C	AU-SB-13742
8K0422817A	AU-ES-7377
8K0422818A	AU-ES-7378
8K0501529K	AU-TC-7373
8K0501529K (-)	AU-SB-12596
8K0501530K	AU-TC-7374
8K0501530K (-)	AU-SB-12596
8K0501541	AU-SB-12570
8K0505323F	AU-TC-7369
8K0505324F	AU-TC-7372
8K0505465E	AU-LS-7376
8K0505465E (-)	AU-SB-8107
8K0505465G	AU-LS-7376
8N0407151A	AU-TC-8869
8N0407151A	AU-WP-3948
8N0407152A	AU-TC-8870
8N0407152A	AU-WP-3949
8N0407181B	AU-SB-7331

...SKODA	MOOG
8N0407182A	AU-SB-7256
8N0407365A	VO-BJ-2410
8N0407365B	VO-BJ-2410
8N0407365C	VO-BJ-2410
8N0422803A	AU-DS-0718
8N0422803A (-)	VO-AX-2409
8N0422804A	AU-DS-0717
8N0422804A (-)	VO-AX-2409
8N0422807	VO-AX-2409
8N0422807D	AU-AX-6982
8N0422811A	VO-ES-2405
8N0422812A	VO-ES-2404
8N0422831	K150182
8S0423810A	AU-AX-15387
8Z0407151J	VO-WP-2411
8Z0407152J	VO-WP-2412
8Z0407153L	VO-WP-2413
8Z0407153L	VO-WP-2414
8Z0407182C	AU-SB-3878
8Z0407183A	AU-SB-3879
8Z0411314B	AU-SB-7436
8Z0411315B	VO-LS-2422
8Z0423803C (-)	VO-AX-2408
8Z0423804C (-)	VO-AX-2408
8Z0423811A	AU-ES-10890
8Z0423812A	AU-ES-10889
8Z0501541	AU-SB-8039
99634306903	VO-LS-13587
99634307002	VO-LS-10912
N10218708	SK-DS-3993
N90113701	VO-SB-10057

SMART	MOOG
0001765V005000000	ME-WP-2856
0001802V004000000	ME-LS-2857
0002271V003000005	ME-BJ-2099
0002271V007000005	ME-BJ-2099
0004887V006000000	ME-ES-2853
0005102V005000000	ME-LS-2386
0007001V004000000	ME-WP-2855
0007001V006000000	ME-SB-4020
0007001V006000000	ME-WP-2855
0007001V007000000	ME-WP-2855
0014141V001000000	ME-WP-2855
0014141V002000000	ME-WP-2855
0015642V001	ME-BJ-2099
0015642V001000000	ME-BJ-2099
14141V001000000	ME-WP-2855
14141V002000000	ME-WP-2855
15642V001	ME-BJ-2099
15642V001000000	ME-BJ-2099
1765V00500	ME-WP-2856
1802V004000000	ME-LS-2857
2271V007000005	ME-BJ-2099
4503330014	ME-SB-4020
451 330 0010 (-)	ME-BJ-10749

...SMART

	MOOG
4513200189	ME-LS-10158
4513200189S1	ME-LS-10158
4513230085	ME-SB-13918
4513230185	ME-SB-13918
4513300010	ME-TC-10751
4513300010 (-)	ME-SB-12686
4513380037	OP-ES-5569
4513380137	OP-ES-5569
4514600051 (-)	ME-AX-13995
4514600096	K150214
4514600151 (-)	ME-AX-13995
4514600451 (-)	ME-AX-13995
454 330 07 07 (-)	ME-SB-5153
454 330 07 07 (-)	ME-SB-5154
454 330 08 07 (-)	ME-SB-5153
454 330 08 07 (-)	ME-SB-5154
4543200010	ME-LS-2078
4543300707	ME-WP-5151
4543300707 (-)	ME-BJ-5150
4543300807	ME-WP-5152
4543300807 (-)	ME-BJ-5150
4543301907	ME-WP-5151
4543302007	ME-WP-5152
4543302607	ME-WP-5152
4544600205	ME-ES-2079
4887V002000000	ME-ES-2853
4887V006000000	ME-ES-2853
5102V005000000	ME-LS-2386

SSANGYONG

	MOOG
4443003010	DE-BJ-2863
4443003011	DE-BJ-2863
4450505000	DE-BJ-2865
4450505001	DE-BJ-2865
4475005000	DE-LS-2862
4475005001	DE-LS-2862
4475005002	DE-LS-2862
4666005501	DE-ES-2861
4666005502	DE-ES-2861
95952930	DE-AX-5752

SUBARU

	MOOG
20201AA061	SU-SB-14935
20201FA060	SU-SB-14935
20201FA070	SU-SB-14936
20201FA080	SU-SB-14935
20206AJ000	SU-BJ-104141
20320AA100	SU-SB-10002
20320AA110	SU-SB-10002
20370AE00A	SU-SB-10010
20370FE100	SU-SB-10003
20370FE110	SU-SB-10003
20375AE00A	SU-SB-10010
20401AC011	SU-SB-14671
20420AA002	SU-LS-8902
20420AA003	SU-LS-8902

...SUBARU

	MOOG
20420AA004	SU-LS-8902
20470AE000	SU-LS-7988
20470AE001	SU-LS-7988
20470AE010	SU-LS-7988
20470AJ010	SU-LS-13523
20470FE000	SU-LS-7902
20470SA000	SU-LS-7902
20470SA001	SU-LS-7902
20470SA010	SU-LS-7940
20470SA011	SU-LS-7940
20481AA000	SU-LS-4118
20481AA001	SU-LS-4118
21067GA050	SU-BJ-104141
26010029	K150014
31232GA040	K150068
31232GA081	K150062
31232GA082	K150062
31232GA082	K150073
31310GA152	SU-AX-2869
31320GA190	SU-ES-2031
31320GA200	SU-ES-2032
31321GA082	K150062
34135FC000	K150160
34137FA000	K150068
34137SA000	K150247
34140AA010	SU-AX-2866
34140AA010	SU-AX-2869
34140AA011	SU-AX-2866
34140AA011	SU-AX-2869
34140AA012	SU-AX-2866
34140AA012	SU-AX-2869
34140AA013	SU-AX-2866
34140AA013	SU-AX-2869
34140AA030	SU-AX-2866
34140AA030	SU-AX-2869
34140AA040	SU-AX-2866
34140AA040	SU-AX-2869
34140FC000	SU-AX-2866
34141AA041	SU-ES-2870
34141AA042	SU-ES-2870
34160AE000	SU-AX-7907
34160AE001	SU-AX-7907
34160AE010	SU-AX-14768
34160XA010	SU-AX-10838
34161SA000	SU-ES-2870
34161SA001	SU-ES-2870
3416EAE010	SU-AX-14768
4520085E00	OP-TC-3619
4520160E01	SZ-TC-1188
4520260E01	SZ-TC-1238
4526177A10	OP-SB-1386
4705655	DE-ES-0639
4881060B00	SZ-ES-2610
4881083E02	OP-ES-3620
4883086G00	OP-AX-2194
721067020	SU-BJ-104197

...SUBARU

	MOOG
721067021	SU-BJ-104197
721067022	SU-BJ-104197
731320020	SU-ES-3076
9208987	DE-TC-0125
A00132125	K150063
A00132126	K150063

SUZUKI

	MOOG
0931910030	OP-SB-1386
4171060G10	SZ-SB-10011
4171282000	SZ-SB-10004
4171382000	SZ-SB-10004
4171482000	SZ-SB-10004
4173182000	SZ-SB-10004
4174260G00	SZ-SB-10011
4185065D00	K150208
4191060G11	SZ-SB-10012
4191060G12	SZ-SB-10012
4191060G20	SZ-SB-10013
4242060A00	SZ-LS-10095
4242062J00	SZ-LS-5081
4242063J00	SZ-LS-5081
4242065D00	MI-LS-2376
4242065D00	SZ-LS-10095
4242065J00	SZ-LS-7318
4242077A00	SZ-LS-7944
4242080J00	FI-LS-5159
4242081A10	SZ-LS-10106
4242085C00	SZ-LS-10095
42420M68K00	NI-LS-9056
4243164B00	SZ-SB-6726
4243170B42	SZ-SB-12583
42431M68K00	NI-SB-12581
42451M76G00	OP-SB-9075
4520060812	SZ-TC-1188
4520075F00	DE-TC-0125
4520075F20	DE-TC-0125
4520081A10	SZ-TC-10136
4520082000	SZ-TC-1156
4520083E00	OP-TC-3619
4520084E00	OP-TC-3619
4520085C00	SZ-BJ-0608
4520085E00	OP-TC-3619
45200M79F00	SZ-TC-10107
45200M79F10	SZ-TC-10107
4520154G01	SZ-TC-12572
4520160B01	SZ-TC-1188
4520160E01	SZ-TC-1188
4520160G00	SZ-TC-8880
4520160G00	SZ-WP-2897
4520162J00	SZ-WP-5084
4520163G01	SZ-TC-8880
4520163G01	SZ-WP-2897
4520163J00	SZ-WP-5084
4520165D00	SZ-WP-2899
4520165D01	SZ-WP-2899

...SUZUKI

	MOOG
4520165J00	SZ-TC-7349
4520165J00 (-)	SZ-SB-7351
4520167D01	SZ-WP-2899
4520170C00	SZ-TC-1188
4520172K00	SZ-WP-5084
4520177A01	SZ-WP-2893
4520177A10	SZ-WP-2893
4520179J00	FI-WP-5158
45201M68K00	NI-WP-9096
45201M68K00 (-)	NI-SB-10708
4520254G01	SZ-TC-12571
4520260B01	SZ-TC-1238
4520260G00	SZ-TC-8879
4520260G00	SZ-WP-2896
4520262J00	SZ-WP-5083
4520262J00 (-)	SZ-BJ-5080
4520262J00 (-)	SZ-SB-5086
4520263G01	SZ-TC-8879
4520263G01	SZ-WP-2896
4520263J00	SZ-WP-5083
4520265D00	SZ-WP-2898
4520265D01	SZ-WP-2898
4520265J00	SZ-TC-7348
4520265J00 (-)	SZ-SB-7351
4520267D01	SZ-WP-2898
4520270C00	SZ-TC-1238
4520272K00	SZ-WP-5083
4520277A01	SZ-WP-2892
4520277A10	SZ-WP-2892
4520279J00	FI-WP-5157
45202M68K00	NI-WP-9095
45202M68K00 (-)	NI-SB-10708
4526179J00	FI-SB-5160
4553062J00	SZ-SB-5085
4553068L00	FI-SB-5160
45530M68K00	NI-SB-10707
4554068K00	NI-SB-10708
4570060A00	SZ-BJ-0608
4570060A01	SZ-BJ-0608
4620160B01	SZ-TC-1188
4630060B00	SZ-TC-4440
4630060B10	SZ-TC-4440
4630070C02	SZ-TC-5611
4642060B02	SZ-SB-0458
4663060B01	NI-LS-1168
4663080F00	SZ-LS-5615
4664080F00	SZ-LS-5614
4853078001	SZ-AX-1814
4857160G00	K150013
4857177A00	K150205
4857182000	K150063
48571M82000	K150063
4857260B10	K150063
4857277A00	K150205
4857282000	K150063
486190D011	TO-SB-10085

...SUZUKI	MOOG
4881060810	SZ-ES-8478
4881060A00	SZ-ES-0103
4881060B00	SZ-ES-2610
4881063J00	OP-ES-3620
4881063J00	SZ-ES-8478
4881065D00	SZ-ES-2888
4881065J00	SZ-ES-7347
4881076G00	SZ-ES-2610
4881078000	SZ-ES-2561
4881078001	SZ-ES-2561
4881078A00	SZ-ES-3889
4881079000	SZ-ES-2562
4881079J00	FI-ES-5155
4881079J01	FI-ES-5155
4881081A00	SZ-ES-2885
4881081A01	SZ-ES-0103
4881082000	SZ-ES-2610
4881083300	SZ-ES-0103
4881083E00	SZ-ES-2292
4881083E01	DE-ES-0639
4881083E01	OP-ES-3620
4881083E01	SZ-ES-2292
4881083E02	OP-ES-3620
4881083E02	SZ-ES-2292
4881084000	SZ-ES-0765
4881084001	SZ-ES-0765
48810A60A00	SZ-ES-0103
48810M84010	SZ-ES-0765
4882060A00	SZ-ES-0613
4882065D00	SZ-ES-2887
4882077E00	SZ-ES-0613
4882078A00	SZ-ES-2894
4882079000	SZ-ES-2563
4882081A00	SZ-ES-2884
4882081A01	SZ-ES-2884
4883020B00	SZ-AX-1271
4883060B00	SZ-AX-1271
4883060G00	SZ-AX-2875
4883063J00	SZ-AX-5082
4883065D00	SZ-AX-2872
4883065J00	SZ-AX-7319
4883075F00	SZ-AX-10544
4883075F00	SZ-AX-2886
4883075F00000	SZ-AX-10544
4883075F01	SZ-AX-10544
4883075F01000	SZ-AX-10544
4883076G00	SZ-AX-2891
4883077A00	SZ-AX-2891
4883078001	SZ-AX-1814
4883078F00	SZ-AX-2886
4883079J00	FI-AX-10883
4883079J10	FI-AX-5156
4883082000	SZ-AX-1693
4883083E00	OP-AX-2194
4883086G00	OP-AX-2194
48830M68K00	NI-AX-9063

...SUZUKI	MOOG
4885060A00	SZ-DL-4441
544234A00B	NI-SB-10707
545294A00A	NI-BJ-12582
545304A00D	NI-SB-10708
54614M4A00B	NI-SB-12581
5461850J20	NI-LS-1168
71742688	FI-LS-5159
71742731 (-)	FI-SB-5161
71742732 (-)	FI-SB-5161
71742770	FI-ES-5155
96052206	SZ-SB-10004
96380586	SZ-SB-2960
B21132125	K150176

TOYOTA	MOOG
186300K040	TO-WP-13253
271699	K150207
3520Q2 (-)	CI-SB-4960
3520Q2 (-)	CI-SB-4961
3521L3 (-)	CI-SB-4960
3521L3 (-)	CI-SB-4961
400622	K150120
406635	K150120
4330859035	TO-BJ-2274
4331009015	TO-BJ-8833
4331009030	TO-BJ-8833
433100K010	TO-BJ-8833
433100K040	TO-BJ-8833
4331039016	TO-BJ-3011
4331039085	TO-BJ-3011
4333009030	TO-BJ-0352
4333009050	TO-BJ-1734
4333009070	TO-BJ-0538
4333009090	TO-BJ-0538
4333009160	TO-BJ-3002
4333009210	TO-BJ-4974
4333009230	TO-BJ-0538
4333009295	TO-BJ-8834
4333009360	TO-BJ-8972
4333009510	TO-BJ-8834
4333009630	TO-BJ-6579
4333009630	TO-BJ-6588
4333009770	TO-BJ-10648
4333019025	TO-BJ-10443
4333019037	TO-BJ-10443
4333019045	TO-BJ-0508
4333019065	TO-BJ-104111
4333019066	TO-BJ-104111
4333019075	TO-BJ-0508
4333019085	TO-BJ-4237
4333019095	TO-BJ-0352
4333019115	TO-BJ-0538
4333019245	TO-BJ-6579
4333019245	TO-BJ-6588
4333029125	TO-BJ-10032
4333029155	TO-BJ-10032

...TOYOTA	MOOG
4333029225	TO-BJ-0352
4333029225	TO-BJ-4108
4333029235	TO-BJ-1635
4333029255	TO-BJ-10434
4333029265	TO-BJ-0352
4333029295	TO-BJ-10032
4333029315	TO-BJ-0352
4333029325	TO-BJ-0352
4333029325	TO-BJ-4108
4333029326	TO-BJ-0352
4333029326	TO-BJ-4108
4333029375	TO-BJ-0352
4333029405	TO-BJ-3002
4333029515	TO-BJ-10032
4333029535	TO-BJ-10032
4333029615	TO-BJ-3002
4333039135	TO-BJ-10374
4333039165	TO-BJ-10029
4333039195	TO-BJ-10434
4333039235	TO-BJ-10434
4333039245	TO-BJ-1800
4333039255	TO-BJ-10434
4333039265	TO-BJ-104188
4333039275	TO-BJ-10374
4333039285	TO-BJ-1734
4333039295	TO-BJ-1800
4333039315	TO-BJ-104188
4333039345	TO-BJ-10374
4333039415	TO-BJ-3010
4333039435	TO-BJ-1734
4333039445	TO-BJ-1800
4333039466	TO-BJ-3010
4333039490	TO-BJ-8834
4333039585	TO-BJ-3010
4333039835	TO-BJ-104188
4333049025	TO-BJ-0352
4333049025	TO-BJ-4108
4333049095	TO-BJ-6579
4333049095	TO-BJ-6588
4333049185	TO-BJ-13525
4334009010	TO-BJ-3001
4334019016	TO-BJ-104111
4334019025	TO-BJ-4227
4334029105	TO-BJ-10032
4334029175	TO-BJ-3001
4334029215	TO-BJ-3001
4334039145	TO-BJ-10029
4334039165	TO-BJ-10029
4334039175	TO-BJ-10434
4334039225	TO-BJ-1800
4334039235	TO-BJ-10434
4334039245	TO-BJ-104188
4334039325	TO-BJ-3009
4334039356	TO-BJ-3009
4334039465	TO-BJ-3009
4335029085	TO-BJ-10435

...TOYOTA	MOOG
4335039035	TO-BJ-10028
4335039045	TO-BJ-10435
4335039075	TO-BJ-10028
4335039085	TO-BJ-104188
4335039085	TO-BJ-10435
4335039115	TO-BJ-10028
4335039255	TO-BJ-10434
4336039075	TO-BJ-10435
4336039085	TO-BJ-104188
4336039085	TO-BJ-10435
4336039087	TO-BJ-104188
4504460H3	TO-ES-1737
4504469085	TO-ES-1737
4504469125	TO-ES-4980
4504569065	TO-ES-4979
4504605070	TO-ES-10646
4504609020	TO-ES-3306
4504609050	TO-ES-0374
4504609060	TO-ES-0374
4504609100	TO-ES-0374
4504609230	TO-ES-4973
4504609250	TO-ES-8980
4504609251	TO-ES-8980
4504609260	TO-ES-8980
4504609261	TO-ES-8980
4504609280	TO-ES-8835
4504609281	TO-ES-8835
4504609295	CI-ES-3964
4504609310	TO-ES-8835
4504609360	TO-ES-2978
4504609430	TO-ES-4889
4504609570	TO-ES-5773
4504609660	TO-ES-10646
4504619165	TO-ES-0506
4504619175	TO-ES-2382
4504619195	TO-ES-5617
4504619205	TO-ES-0509
4504619206	TO-ES-0509
4504619213	TO-ES-0509
4504619216	TO-ES-0509
4504619265	TO-ES-2978
4504619405	TO-ES-5773
4504619415	TO-ES-5773
4504629115	TO-ES-2508
4504629125	TO-ES-2508
4504629165	TO-ES-3396
4504629235	TO-ES-3034
4504629255	TO-ES-3306
4504629275	TO-ES-0231
4504629305	TO-ES-2382
4504629325	TO-ES-7878
4504629335	TO-ES-0231
4504629365	TO-ES-0374
4504629425	TO-ES-4889
4504639105	TO-ES-2508
4504639106	TO-ES-2508

...TOYOTA	MOOG
4504639125	TO-ES-2508
4504639135	TO-ES-2508
4504639165	TO-ES-2508
4504639175	TO-ES-2508
4504639215	TO-ES-2508
4504639215 (-)	TO-AX-3014
4504639235	TO-ES-2508
4504639335	TO-ES-4985
4504639355	TO-ES-2508
4504639375	TO-ES-2508
4504639385	TO-ES-2508
4504639505	TO-ES-4996
4504649085	TO-ES-2998
4504649095	TO-ES-2991
4504649115	TO-ES-2978
4504649125	TO-ES-2986
4504649195	TO-ES-6583
4504649225	TO-ES-10900
4504659025	TO-ES-0740
4504659026	TO-ES-0740
4504659115	TO-ES-4973
4504659195	TO-ES-13238
4504659255	TO-ES-13238
4504659255	TO-ES-2978
4504669100	TO-ES-4443
4504669115	TO-ES-2591
4504669125	TO-ES-4978
4504669135	TO-ES-4978
4504669195	TO-ES-4442
4504669205	TO-ES-4990
4504705060	TO-ES-10645
4504709010	TO-ES-0375
4504709020	TO-ES-0375
4504709030	TO-ES-0375
4504709125	CI-ES-3965
4504709150	TO-ES-2977
4504709270	TO-ES-5772
4504709320	TO-ES-10645
4504719075	TO-ES-5616
4504719115	TO-ES-2977
4504719205	TO-ES-5772
4504719215	TO-ES-5772
4504729045	TO-ES-3395
4504729065	TO-ES-3024
4504729075	TO-ES-0230
4504729105	TO-ES-0230
4504729125	TO-ES-0375
4504739215	TO-ES-4984
4504739355 (-)	TO-AX-3014
4504749015	TO-ES-2997
4504749025	TO-ES-2990
4504749045	TO-ES-2977
4504749055	TO-ES-2987
4504749135	TO-ES-6582
4504749165	TO-ES-10899
4504759025	TO-ES-0741

...TOYOTA	MOOG
4504759026	TO-ES-0741
4504759135	TO-ES-13239
4504759165	TO-ES-13239
4504759165	TO-ES-2977
4504760010	TO-ES-2594
4504760011	TO-ES-2594
4504760012	TO-ES-2594
4504760013	TO-ES-2594
4504760H01	TO-ES-2594
4504760H02	TO-ES-2594
4504769035	TO-ES-2594
4504769065	TO-ES-2594
4504769066	TO-ES-4977
4504769067	TO-ES-4977
4504769085	TO-ES-4977
4504769115	TO-ES-4989
4540639135	TO-ES-3003
4540639165	TO-ES-3003
4540639175	TO-ES-3003
4540639185	TO-ES-3003
4546009010	TO-ES-3016
4546019105	TO-ES-2382
4546019215	TO-ES-2382
4546029425	TO-ES-3007
4546039615	TO-ES-3016
4546535020	TO-DL-2369
4546535040	TO-ES-3003
4547029185	TO-ES-3006
4547039215	TO-ES-3017
455000H010	CI-AX-5060
4550305010	TO-AX-1280
4550305010	TO-AX-1297
4550305020	TO-AX-1280
4550305050	TO-AX-1280
4550309230	TO-AX-3015
4550309321	TO-AX-8836
4550309330	TO-AX-8836
4550309331	TO-AX-8836
4550309340	TO-AX-8836
455030D080	TO-AX-7449
455030F010	TO-AX-4972
4550312130	TO-AX-2975
4550312130	TO-AX-2979
4550319056	TO-ES-2381
4550319075	TO-AX-0507
4550319125	TO-AX-2976
4550319145	TO-AX-5612
4550319155	TO-AX-1637
4550319195	TO-AX-1637
4550319205	TO-AX-1636
4550319215	TO-AX-1640
4550319255	TO-AX-2975
4550319255	TO-AX-2979
4550320170	TO-AX-4972
4550329105	TO-AX-2833
4550329285	TO-AX-3018

...TOYOTA	MOOG
4550329295	TO-AX-3018
4550329355	TO-AX-3321
4550329365	TO-AX-1640
4550329375	TO-BJ-0352
4550329385	TO-AX-1636
4550329435	TO-AX-0619
4550329475	TO-AX-1297
4550329565	TO-AX-7874
4550329575	TO-AX-7874
4550329615	TO-AX-0619
4550329765	TO-AX-3008
4550339025	TO-AX-2833
4550339055	TO-AX-3321
4550339075	TO-AX-3014
4550339135	TO-AX-3321
4550339225	TO-AX-3015
4550339235	TO-AX-3983
4550339265	TO-AX-3983
4550342020	TO-AX-10446
4550349035	TO-AX-2999
4550349055	TO-AX-2994
4550349105	TO-AX-2982
4550349165	TO-AX-10446
4550352010	TO-AX-1740
4550352070	TO-AX-7449
4550359045	TO-AX-1740
4550369015	TO-AX-4987
4550369025	TO-AX-4988
4550428030	TO-AX-3008
45510 12390 (-)	TO-AX-14616
45510 12391 (-)	TO-AX-14616
4553505010	K150173
4553505020	K150171
4553506010	K150177
4553506020	K150177
4553509020	K150239
4553510021	K150096
4553510050	K150095
4553510051	K150095
4553510060	K150145
4553512060	K150170
4553512070	K150177
4553512100	K150177
4553516030	K150145
4553520080	K150207
4553522080	K150170
4553526020	K150189
4553526030	K150189
4553533010	K150177
4553533020	K150177
4553550050	K150108
4553552010	K150215
4553552030	K150240
4553560010	K150188
4553587709	K150145
4553610060	K150096

...TOYOTA	MOOG
4806105010	TO-SB-7258
4806559035	TO-WP-0804
4806559035	TO-WP-0807
4806729075	TO-WP-1951
4806729085	TO-WP-1951
4806729085	TO-WP-1952
48068 05080 (-)	TO-SB-13917
4806802010	TO-WP-1709
4806802030	TO-WP-2235
4806802070	TO-WP-2235
4806802100	TO-WP-2235
4806802130	TO-WP-8426
4806805050	TO-WP-2230
4806805050	TO-WP-2231
4806805070	TO-WP-4976
4806805070 (-)	TO-SB-12613
4806805070 (-)	TO-SB-2966
4806805080	TO-WP-13668
4806805080 (-)	TO-SB-13916
48068-06070	TO-WP-7359
4806809030	TO-WP-0804
4806809040	TO-WP-7450
4806809040 (-)	TO-SB-10128
4806809040 (-)	TO-SB-10129
4806809041	TO-WP-7450
480680F010	TO-WP-13310
480680F030	TO-WP-8426
480680H010	PE-WP-4028
480680K040	TO-WP-13268
4806812110	TO-WP-4330
4806812130	TO-WP-1683
4806812140	TO-WP-1683
4806812160	TO-WP-1709
4806812170	TO-WP-1709
4806812171	TO-WP-1709
4806812180	TO-WP-1709
4806812181	TO-WP-1709
4806812190	TO-WP-1709
4806812191	TO-WP-1709
4806812260	TO-WP-2235
4806812260 (-)	TO-SB-2961
4806812260 (-)	TO-SB-2966
4806812300	TO-WP-8426
4806812300 (-)	TO-SB-13910
4806813010	TO-WP-2235
4806818120	TO-WP-7359
4806820260	TO-WP-1076
4806826160	TO-TC-13950
4806829265	TO-WP-2985
4806833010	TO-WP-4314
4806833020	TO-WP-4314
4806833030	TO-WP-1758
48068-33050	TO-WP-7359
48068-33060	TO-WP-7359
48068-33070	TO-WP-7359
4806842012	TO-WP-1075

...TOYOTA	MOOG
4806842022	TO-WP-1075
4806842040	TO-WP-4378
4806842040 (-)	TO-SB-5137
4806842040 (-)	TO-SB-5138
4806842050	TO-WP-6585
4806842050 (-)	TO-SB-6586
4806842050 *	TO-SB-6587
4806842051	TO-WP-6585
4806842060	TO-WP-15320
4806847050	TO-WP-13662
4806849045	TO-WP-2985
4806849065	TO-WP-2985
4806859035	TO-WP-0804
4806859035 (-)	TO-BJ-2274
4806859035 (-)	TO-SB-7380
4806859135	TO-WP-7450
4806859145	TO-WP-7450
4806860010	TO-WP-5007
48069 05080 (-)	TO-SB-13917
4806902010	TO-WP-3867
4806902030	TO-WP-2234
4806902070	TO-WP-2234
4806902100	TO-WP-2234
4806902130	TO-WP-8425
4806905050	TO-WP-2230
4806905050	TO-WP-2231
4806905070	TO-WP-4975
4806905070 (-)	TO-SB-12613
4806905070 (-)	TO-SB-2966
4806905080	TO-WP-13667
4806905080 (-)	TO-SB-13916
48069-06070	TO-WP-7358
4806909030	TO-WP-0807
4806909040	TO-WP-7451
4806909040 (-)	TO-SB-10128
4806909040 (-)	TO-SB-10129
4806909041	TO-WP-7451
480690F010	TO-WP-13309
480690F030	TO-WP-8425
480690H010	PE-WP-4027
480690K040	TO-WP-13267
4806912110	TO-WP-4320
4806912130	TO-WP-1729
4806912140	TO-WP-1729
4806912160	TO-WP-3867
4806912170	TO-WP-3867
4806912171	TO-WP-3867
4806912180	TO-WP-3867
4806912181	TO-WP-3867
4806912190	TO-WP-3867
4806912191	TO-WP-3867
4806912260	TO-WP-2234
4806912300	TO-WP-8425
4806912300 (-)	TO-SB-13910
4806913010	TO-WP-2234
4806920260	TO-WP-1082

...TOYOTA	MOOG
4806926160	TO-TC-13949
4806928120	TO-WP-7358
4806929265	TO-WP-2984
4806933010	TO-WP-4313
4806933020	TO-WP-4313
4806933030	TO-WP-1798
4806933031	TO-WP-1798
48069-33050	TO-WP-7358
48069-33060	TO-WP-7358
48069-33070	TO-WP-7358
4806942012	TO-WP-1074
4806942022	TO-WP-1074
4806942040	TO-WP-2992
4806942040 (-)	TO-SB-5137
4806942040 (-)	TO-SB-5138
4806942050	TO-WP-6584
4806942050 (-)	TO-SB-6586
4806942050 *	TO-SB-6587
4806942051	TO-WP-6584
4806942060	TO-WP-15319
4806947050	TO-WP-13661
4806949045	TO-WP-2984
4806949065	TO-WP-2984
4806959035	TO-WP-0807
4806959035 (-)	TO-BJ-2274
4806959125	TO-WP-7451
4806959135	TO-WP-7451
4806960010	TO-WP-5006
4807102040	TO-SB-9702
4807102041	TO-SB-9702
4807112130	TO-SB-9702
4807112140	TO-SB-9702
4807202040	TO-SB-9700
4807202041	TO-SB-9700
4807212130	TO-SB-9700
4807212140	TO-SB-9700
4807220020	TO-SB-10018
4860306031	TO-SB-10021
4860333020	TO-SB-10021
4860333021	TO-SB-10021
4860901050	TO-SB-10016
4860902120	TO-SB-10016
4860906061	TO-SB-10022
4860906081	TO-SB-10022
48609-0R010	TO-SB-10975
4860916140	TO-SB-10044
4860916410	TO-SB-10044
4860917030	TO-SB-10017
4860917040	TO-SB-10017
4860920471	TO-SB-10016
4860933110	TO-SB-10022
4860933120	TO-SB-10022
4860933121	TO-SB-10022
4860933160	TO-SB-10015
48609-42010	TO-SB-10023
48609-42011	TO-SB-10023

...TOYOTA	MOOG
48609-42012	TO-SB-10023
4860948010	TO-SB-10015
4860948020	TO-SB-10015
486100K040	TO-WP-13254
4861060030	TO-WP-4384
4861060030 (-)	TO-BJ-4991
486190D011	TO-SB-10085
4862060010	TO-WP-4386
4862060010 (-)	TO-BJ-4992
4863060010	TO-WP-4383
4863060010 (-)	TO-BJ-4991
4863260010	TO-SB-4993
4863260020	TO-SB-10620
4864060010	TO-WP-4385
4864060010 (-)	TO-BJ-4992
4865020020	TO-LS-10650
4865020021	TO-LS-10650
4865405040	TO-SB-7257
4865412070	TO-SB-1936
4865412120	TO-SB-1939
4865420150	TO-SB-5140
4865460010	TO-SB-4994
48655 02060	TO-SB-13917
4865512010	TO-SB-3213
4865512050	TO-SB-7368
4865520140	TO-SB-5139
4865520140	TO-SB-7258
4865560010	TO-SB-4995
4865560030	TO-SB-10548
4872042020	TO-TC-14548
4872552021	TO-SB-13711
487250H010	CI-SB-4962
4873042020	TO-TC-14547
4875006050	TO-SB-10024
4875006060	TO-SB-10024
4875006061	TO-SB-10024
4875016110	TO-SB-10026
4875032070	TO-SB-10042
4875033020	TO-SB-10024
4875033061	TO-SB-10024
4876032020	TO-SB-10042
4881005011	TO-LS-1187
4881005012	TO-LS-1187
4881005012	TO-LS-1191
4881006030	TO-LS-4709
488100K010	TO-LS-10549
488100K010	TO-LS-3984
4881020010	TO-LS-1648
4881020020	TO-LS-1187
4881020020	TO-LS-1191
4881026030	TO-LS-7869
4881026030 (-)	TO-SB-14952
4881028010	TO-LS-1663
4881028020	TO-LS-1663
4881033010	TO-LS-4709
4881044010	TO-LS-1187

...TOYOTA	MOOG
4881044010	TO-LS-1191
4881060040	TO-LS-3984
4881502140	TO-SB-13851
4881505120	TO-SB-13970
4881505130	TO-SB-13851
4881505130	TO-SB-13969
4881505170	TO-SB-13851
4881506020	TO-SB-6831
4881506021	TO-SB-6831
4881507010	TO-SB-6831
48815-0D100	TO-SB-10696
488150H010	CI-SB-7949
4881512370	TO-SB-13851
4881528061	TO-SB-10102
4881533010	TO-SB-6831
4881533011	TO-SB-6831
4881533030	TO-SB-6831
4881542090	TO-SB-10127
4881542100	TO-SB-14052
4881542110	TO-SB-10127
4881542121	TO-SB-14052
4881552010	TO-SB-13791
4881552020	TO-SB-14047
4881560180	TO-SB-13265
4881560350	TO-SB-13265
4881575010	TO-SB-13851
4881575020	TO-SB-13852
4881802060	TO-SB-10097
4881805070	TO-SB-10932
4881952010	TO-LS-4733
4881970010	CI-LS-4959
4882002010	TO-LS-0376
4882002020	TO-LS-2976
4882002070	TO-LS-6580
4882005011	TO-LS-1191
4882005012	TO-LS-1191
4882006030	TO-LS-4710
4882006040	TO-LS-3000
488200D010	TO-LS-5090
488200D020	TO-LS-5090
488200K010	TO-LS-8888
488200K030	TO-LS-10757
4882014011	TO-LS-4159
4882017020	TO-LS-10681
4882017030	TO-LS-10681
4882017040	TO-LS-10681
4882020010	TO-AX-1784
4882020030	TO-LS-1662
4882020040	TO-LS-1191
4882024010	TO-LS-4159
4882026030	TO-LS-7870
4882028010	TO-LS-1676
4882028030	TO-LS-1676
4882028050	TO-LS-3000
4882032010	TO-LS-2976
4882033010	TO-LS-0376

...TOYOTA	MOOG
4882033020	TO-LS-4710
4882035030	TO-LS-4983
4882042010	TO-LS-5141
4882042020	TO-LS-2993
4882042030	TO-LS-6580
4882044010	TO-LS-1191
4882044020	TO-LS-2983
4882047010	TO-LS-2980
4882047020	TO-LS-6580
4882052030	TO-LS-5090
4882060031	TO-LS-8966
4882060032	TO-LS-8966
4882060050	TO-LS-10757
4882060050	TO-LS-4291
48820AD010	TO-LS-4983
4883005020	TO-LS-3367
4883005030	TO-LS-8428
4883006020	TO-LS-4157
4883006030	TO-LS-4157
4883012060	TO-LS-1146
4883012070	TO-LS-8428
4883017030	TO-LS-7370
4883017040	TO-LS-7370
4883017050	TO-LS-7370
4883017070	TO-LS-4166
4883020010	TO-LS-1146
4883021020	TO-LS-4128
4883032010	TO-LS-1146
4883032020	TO-LS-1146
4883033010	TO-LS-4157
4883035020	TO-LS-4986
4883042010	TO-LS-4168
4883042020	TO-LS-6581
4883042021	TO-LS-6581
4883042022	TO-LS-6581
4883048010	TO-LS-4157
4883060030	TO-LS-4997
4883060180	TO-LS-4291
4884021010	TO-LS-4120
4884042010	TO-LS-4167
4950339265	TO-AX-3983
509110	CI-LS-4959
5652802000	K150145
7820040638	K150173
8333029265	TO-BJ-0352
9038516001	TO-SB-10031
9038516004	TO-SB-10031
9090363002	TO-SB-10015
9090363002	TO-SB-10021
9090363002	TO-SB-10022
9090363014	TO-SB-10015

VAUXHALL	MOOG
0344525	OP-SB-9720
0353561	OP-SB-4545
0402644	OP-SB-3770

...VAUXHALL	MOOG
0402935	OP-SB-4450
0402942	OP-SB-4451
0423017	OP-TC-5610
0423316	OP-SB-4456
07840453	OP-AX-5392
0817744	OP-SB-4543
0902826	K150014
09204751	SZ-ES-2292
09210168	SZ-ES-2292
09210351	SZ-ES-2292
10363556	OP-SB-9728
11042011	OP-SB-9708
13104120	OP-LS-3815
13105744	OP-TC-4081
13105744 (-)	OP-SB-13378
13107328	OP-SB-10169
13110418	OP-SB-8742
13116332	OP-LS-5739
13125492	OP-SB-6810
13131231	OP-SB-3823
13131232	OP-SB-3822
13131963	OP-SB-15682
13138151	OP-SB-0443
13140037	OP-WP-0996
13140038	OP-WP-0995
13140039	OP-WP-0996
13140040	OP-WP-0995
13167940	FI-SB-5439
13169439	OP-LS-0515
13188763	OP-SB-10084
13204071	OP-SB-13644
13204112	OP-TC-13621
13204112 (-)	FI-SB-15440
13204112 (-)	FI-SB-15441
13204115	OP-TC-4081
13204115 (-)	OP-SB-13378
13219090	OP-SB-8420
13219141	OP-LS-8349
13219162	OP-TC-13925
13219163	OP-TC-13926
13219170	OP-SB-10538
13230274	OP-TC-4081
13230274 (-)	OP-SB-13378
13237130	OP-LS-2080
13239222	OP-SB-10540
13251590	OP-SB-13282
13257785	OP-SB-8986
13258052	OP-LS-7446
13260666	FI-SB-5435
13260666	PE-SB-4963
13267215	OP-SB-8742
13271701	OP-SB-10965
13271702	OP-SB-10964
13271996	OP-AX-7768
13272000	OP-ES-7415
13273604	OP-TC-8347

...VAUXHALL	MOOG
13273605	OP-TC-8348
13278358	OP-AX-10486
13278359	OP-ES-7415
13280216	OP-SB-8986
13281782	OP-SB-10794
13281784	OP-SB-10539
13281790	OP-SB-10793
13281792	OP-LS-8350
13282834	OP-LS-13625
13285628	OP-LS-13626
13286686	OP-ES-7415
13286687	OP-AX-8848
13286688	OP-AX-13452
13311920	OP-SB-10842
13318344	OP-TC-13925
13318345	OP-TC-13926
13318884	OP-TC-8347
13318885	OP-TC-8348
13318886	OP-TC-8347
13318887	OP-TC-8348
13320276	OP-SB-10094
13321280	FI-LS-4548
13321338	OP-TC-10115
13321339	OP-TC-10116
13332653	OP-AX-14766
13334021	OP-SB-10570
13334022	OP-TC-10115
13334023	OP-TC-10116
13337880	OP-ES-13627
13337882	OP-ES-13628
13337891	OP-AX-13624
13354538	OP-ES-13627
13354540	OP-ES-13628
13354542	OP-AX-13623
13371816	OP-TC-13453
13371817	OP-TC-13454
13371818	OP-TC-13927
13371819	OP-TC-13927
13391512	OP-LS-13414
13401129	OP-TC-10115
13401130	OP-TC-10116
13426552	OP-WP-3961
13426553	OP-WP-3960
13461920	OP-TC-13453
13500663	OP-SB-10071
13503548	OP-SB-10071
15293924	OP-BJ-4745
1603016	OP-AX-1894
1603016	OP-RK-15063
1603017	OP-AX-5691
1603128	OP-BJ-5393
1603148	OP-LS-2018
1603161	OP-BJ-5393
1603164	OP-BJ-5375
1603167	OP-BJ-5567
1603187	OP-BJ-5393

...VAUXHALL	MOOG
1603202	OP-BJ-0312
1603214	OP-ES-0514
1603215	OP-ES-0514
1603239	OP-AX-1893
1603240	OP-ES-1892
1603241	K150236
1603844	OP-AX-5691
1609000	OP-AX-8746
1609011	OP-AX-8747
1609027	OP-AX-8848
1609045	K150040
1609073	K150040
1609076	K150072
1609095	K150086
1609096	K150171
1609109	K150191
1609121	K150220
1609183	OP-AX-14766
1609184	OP-AX-13452
1609187	OP-AX-13623
1609203	OP-ES-13924
1609211	OP-AX-13415
20835938	OP-SB-10570
20859330	OP-SB-10071
20967947	OP-SB-10071
22744119	OP-LS-4706
242000	OP-SB-9716
24403523	OP-SB-6809
24406498	OP-SB-13240
24413015	OP-TC-1955
24413016	OP-TC-1956
24417251	OP-LS-2080
24428548 (-)	FI-SB-15440
24428548 (-)	FI-SB-15441
24428977	OP-WP-0996
24428978	OP-WP-0995
24430103	OP-SB-0443
24439582	OP-SB-2824
24443815	OP-SB-8745
24449453	OP-WP-0996
24449455	OP-WP-0995
24452034	OP-SB-6992
24454477	OP-WP-2822
24454478	OP-WP-2823
24457385	OP-SB-6846
24460832	OP-SB-3823
24461353	OP-LS-2821
24469643	OP-SB-4069
25995127	OP-SB-8780
25995128	OP-WP-7222
25995129	OP-WP-7223
26010028	OP-AX-5392
26010029	K150014
26011925	OP-ES-5569
26030411	OP-AX-5576
26032284	OP-AX-5577

...VAUXHALL	MOOG
26032286	K150089
26055219	OP-AX-5581
26055220	K150171
26059293	OP-AX-1230
26059293	OP-RK-15054
26059294	OP-ES-0514
26059295	K150191
26065265	OP-ES-0480
26087867	OP-AX-0432
26087867	OP-RK-15058
26087868	OP-ES-5569
26087869	K150220
26102922	OP-AX-1893
26102923	OP-ES-1892
26102924	K150236
26110429	OP-AX-1894
26110429	OP-RK-15063
26110430	OP-AX-5691
26110431	OP-AX-7452
302275	OP-SB-10168
302280	OP-SB-0067
302290	OP-SB-10168
310821	OP-BJ-0177
310823	OP-BJ-2040
312503	OP-SB-9708
322125	OP-DS-5376
322126	OP-DS-3812
322145	OP-DS-5400
322147 (-)	OP-SB-8982
322148	OP-DS-5398
322155	OP-AX-5576
322171	OP-ES-5555
322172	OP-ES-5557
322173	OP-DS-5402
322174	OP-DS-5406
322175	OP-ES-5554
322176	OP-ES-5556
322576	OP-AX-0611
322577	OP-AX-0611
324050	OP-ES-5569
344513	OP-SB-9710
344519	OP-SB-9708
344523	OP-SB-9722
3461921	OP-TC-13454
350078	OP-SB-6680
350081	OP-SB-6681
350093	OP-SB-8962
350109	OP-SB-6642
350112	OP-SB-6630
350117	OP-SB-7934
350122	OP-SB-6681
350123	OP-SB-6680
350124	OP-SB-6679
350125	OP-SB-6679
350127	OP-SB-6676
350130	OP-SB-6806

...VAUXHALL	MOOG
350147	OP-SB-6734
350153	OP-SB-10167
350176	OP-LS-15394
350231	OP-LS-13685
350232	OP-LS-13686
350260	OP-LS-1994
350610	OP-LS-5582
350611	OP-LS-0515
350611	OP-LS-15394
350612	OP-LS-5739
350614	OP-LS-15394
350618	OP-LS-7446
352002	OP-TC-0084
352003	OP-TC-0085
352012	OP-TC-0488
352028	OP-WP-0568
352029	OP-WP-0569
352041	OP-WP-0996
352042	OP-WP-0995
352043	OP-WP-5573
352044	OP-WP-5572
352050	OP-TC-8347
352067	OP-BJ-4870
352071	OP-TC-8348
352087	OP-BJ-4870
352108	OP-SB-10570
352110	OP-TC-10115
352115	OP-TC-10116
352123	OP-WP-5570
352124	OP-WP-5571
352127	OP-WP-5571
352128	OP-WP-5570
352135	OP-WP-0343
352136	OP-WP-0342
352169	OP-WP-5570
352172	OP-WP-5571
352192	OP-WP-0068
352193	OP-WP-0069
3522358	OP-SB-1383
352300	OP-SB-1376
352301	OP-SB-1378
352327	OP-SB-1331
352330	OP-SB-1375
352341	OP-SB-1381
352348	OP-SB-1377
352355	OP-SB-1379
352357	OP-SB-1384
352364	OP-SB-1384
352365	OP-SB-1385
352457	OP-SB-1382
352458	OP-SB-1380
352492	OP-TC-10115
352493	OP-TC-10116
352494	OP-SB-10570
352523 (-)	OP-SB-14711
352523 (-)	OP-SB-14712

...VAUXHALL	MOOG
352524 (-)	OP-SB-14711
352524 (-)	OP-SB-14712
352537 (-)	FI-SB-14965
352538 (-)	FI-SB-14965
352803	OP-BJ-0812
352826	OP-BJ-5559
352827	OP-BJ-5560
352828	OP-BJ-1504
352866	OP-SB-8420
352868	OP-SB-8986
352869	OP-TC-8347
352870	OP-TC-8348
353280	OP-SB-10666
353281	OP-SB-10673
353561	OP-SB-4545
363562	OP-SB-8744
39001003	OP-LS-15333
39001004	OP-LS-15334
39008083	OP-ES-15336
39008084	OP-ES-15335
4011000QAA	RE-BJ-7906
402027	OP-SB-10842
402538	OP-SB-13282
402642	OP-SB-4068
402644	OP-SB-3770
402952	OP-SB-8742
423042	OP-TC-13925
423043	OP-TC-13926
423071	OP-TC-13926
423072	OP-SB-10540
423073	OP-TC-13925
423320	OP-SB-4069
423552	OP-SB-10540
4242062J00	SZ-LS-5081
4242673 (-)	OP-SB-8982
42451M76G00	OP-SB-9075
4403806	RE-AX-7020
4408252	OP-BJ-12502
4408476	K150228
4408905	OP-SB-8083
44163	OP-SB-15682
4418212	RE-WP-1052
4419075	RE-BJ-2302
4419291	OP-LS-10475
4419304	OP-LS-10476
4420954	OP-LS-12602
444081	OP-LS-8350
444153	OP-SB-4094
444160	OP-SB-6846
444161	OP-SB-7935
444162	OP-SB-8751
444200	OP-SB-4089
444201	OP-SB-4090
444291	OP-LS-6993
444335	OP-SB-13451
4500091	OP-SB-8748

...VAUXHALL	MOOG
4500094	RE-SB-3846
4500095	RE-SB-3845
4500211	OP-SB-7215
4520162J00	SZ-WP-5084
4520262J00	SZ-WP-5083
4520262J00 (-)	SZ-BJ-5080
4520262J00 (-)	SZ-SB-5086
4553062J00	SZ-SB-5085
4553505020	K150171
4705172	OP-SB-1386
4705742	OP-TC-3619
4706665	OP-TC-3619
4709195	SZ-ES-8478
4803429	OP-ES-4746
4804642	OP-LS-7224
4806300 (-)	OP-BJ-4745
4806304	OP-LS-4707
4806305	OP-LS-4706
485200780R	OP-ES-10120
485206730R	OP-ES-10119
485212373R	OP-AX-10118
4882079000	SZ-ES-2563
4883063J00	SZ-AX-5082
51885735	FI-SB-14965
5352004	OP-WP-0211
5352005	OP-WP-0210
5352011	OP-TC-0489
5352016	OP-WP-0670
5352017	OP-WP-0671
5352025	OP-BJ-1899
5352026	OP-BJ-1895
5352027	OP-WP-1903
5352028	OP-WP-1902
5402630	OP-SB-4083
5402631	OP-SB-4088
5402634	OP-SB-3770
5402636	OP-SB-8745
5402637	OP-SB-8742
5402638	OP-SB-3770
5432000QAA	NI-SB-9966
5442300QAA	RE-SB-3845
5457000QAA	RE-SB-3846
55700753	FI-LS-4548
55703230	OP-WP-3961
55703231	OP-WP-3960
55703232	FI-SB-5435
55703232	PE-SB-4963
576242000	OP-SB-9716
7700302122	RE-SB-3846
7700302123	RE-SB-3845
7700302439	RE-SB-3846
7700302440	RE-SB-3845
7701207491	NI-SB-9966
7701464313	RE-AX-4280
7848281	OP-DS-5376
8200049624	OP-SB-3818

...VAUXHALL	MOOG
8200626965	RE-SB-13812
8200688871	RE-TC-10093
8200688871 (-)	OP-SB-10114
8200688871 (-)	OP-SB-10117
8200688875	RE-TC-10092
8200688875 (-)	OP-SB-10114
8200688875 (-)	OP-SB-10117
8200688877	OP-BJ-8965
8200750273	OP-TC-8749
8200750274	OP-TC-8750
90009367	OP-LS-2018
900906	K150189
90090811	K150002
90105358	OP-AX-0659
90125567	OP-DS-5376
90140006	OP-ES-5380
90140007	OP-ES-5377
90140407	OP-BJ-5375
90141393	OP-BJ-5567
90166390	OP-TC-0085
90166390	OP-WP-5573
90166391	OP-TC-0084
90166391	OP-WP-5572
90166394	OP-BJ-5393
90168602	OP-SB-6642
90170152	OP-SB-1331
90184755	OP-SB-9716
90184756	OP-SB-9716
90188878	K150040
90189050	OP-SB-4068
90193117	OP-SB-1375
90216574	OP-SB-6630
90217845	OP-SB-3811
90223456	OP-SB-3779
90235040	OP-SB-1644
90235041	OP-SB-1292
90235332	OP-WP-0343
90235333	OP-WP-0342
90250709	OP-SB-7416
90250986	OP-SB-4450
90268463	OP-SB-1377
90271105	OP-DS-5400
90272194	OP-BJ-5559
90272195	OP-BJ-5560
90272683	OP-BJ-5375
90278249	OP-SB-6681
90278577	OP-LS-0993
90278579	OP-LS-1994
90279193	OP-SB-1381
90279437	OP-SB-1379
902825	K150002
902826	K150014
902827	K150014
902829	K150079
90288082	OP-SB-1377
90288207	OP-SB-1379

...VAUXHALL	MOOG
90288232	OP-SB-1376
90288387	OP-WP-0343
90288388	OP-WP-0342
90289557	OP-SB-9716
90289915	OP-AX-0611
90295324	OP-BJ-5393
90295479	OP-BJ-5567
90295625	OP-DS-5398
90297863	OP-BJ-5567
90304225	OP-SB-6680
90304625	SA-ES-4907
90304625 (-)	OP-SB-8982
90304626	SA-ES-4910
90305431	OP-SB-1624
90334027	OP-DS-5402
90334028	OP-DS-5406
90334031	OP-ES-5554
90334032	OP-ES-5556
90334035	OP-ES-5555
90334036	OP-ES-5557
90334075	OP-LS-5575
90334546	OP-SB-1644
90334915	OP-LS-2328
90334916	OP-LS-2329
90334925	OP-SB-3813
90335254	OP-SB-6679
90335966	PE-SB-1315
90343305	OP-SB-7968
90343847	OP-SB-4511
90344217	OP-WP-5570
90344218	OP-WP-5571
90345185	K150002
90345195	K150002
90350447	OP-ES-5562
90350448	OP-ES-5565
90369125	OP-DS-5400
90369704	OP-ES-5562
90369705	OP-ES-5565
90373263	OP-SB-1376
90373264	OP-SB-1377
90373264	OP-SB-7957
90373519	OP-ES-5562
90373520	OP-ES-5565
90373523	OP-AX-0611
90373771	OP-SB-4094
90373778	OP-SB-1376
90373779	OP-WP-0069
90373854	OP-SB-1379
90375506	OP-WP-5571
90392553	OP-DS-5398
90398968	K150040
90442111	K150072
90444294	OP-BJ-5393
90445097	OP-SB-1378
90445098	OP-SB-4545
90445100	OP-SB-10673

...VAUXHALL	MOOG
90445101	OP-SB-10666
90445118	OP-TC-0085
90445119	OP-TC-0084
90445137	OP-LS-5575
90445208	OP-SB-9708
90445565	OP-SB-1380
90445571	OP-SB-1382
90445625	OP-SB-6734
90445644	OP-DS-5587
90445646	OP-DS-5586
90445669	OP-WP-0569
90445670	OP-WP-0568
90447156	OP-SB-4451
90447867	OP-SB-6680
90447868	OP-SB-6681
90447869	OP-SB-6679
90447946	OP-SB-6676
90468554	OP-SB-9722
90468567	OP-SB-6806
90468636	OP-SB-1384
90468638	OP-SB-1383
90468930	OP-LS-5575
90473226	OP-WP-0069
90473227	OP-WP-0068
90473227	PE-TC-5038
90473811	OP-ES-5589
90473812	OP-ES-5588
90487561	OP-BJ-5583
90495045	OP-DS-5574
90495046	OP-SB-7957
90495103	OP-WP-0069
90495104	OP-WP-0068
90495159	OP-WP-0069
90495160	OP-WP-0068
90495160	PE-TC-5038
90495585	OP-SB-3816
90496014	OP-ES-5555
90496015	OP-ES-5557
90496039	OP-WP-0210
90496040	OP-WP-0211
90496116	OP-LS-5582
90496686	OP-SB-4456
90496700	OP-SB-3621
90496711	OP-LS-6993
90497197	OP-TC-10137
90497307	OP-WP-0569
90497308	OP-WP-0568
90498181	OP-AX-5581
90498375	OP-WP-0670
90498376	OP-WP-0671
90498689	OP-SB-10168
90498735	OP-WP-0670
90498736	OP-WP-0671
90498738	OP-SB-1384
90498740	OP-SB-1385
90498745	OP-LS-0515

...VAUXHALL	MOOG
90510639	OP-ES-5555
90510640	OP-ES-5557
90510641	OP-DS-5402
90510642	OP-DS-5406
90510643	OP-ES-5554
90510644	OP-ES-5556
90510647	OP-DS-5584
90510649	OP-DS-5587
90510650	OP-DS-5586
90510651	OP-ES-5555
90510652	OP-ES-5557
90510653	OP-ES-5589
90510654	OP-ES-5588
90511260	OP-TC-0085
90511261	OP-TC-0084
90512775	OP-ES-5579
90512778	K150086
90512982	OP-BJ-5583
90538444	OP-TC-7435
90538865	OP-SB-6808
90539057	OP-SB-8744
90539896	OP-BJ-0312
90540319	OP-AX-5581
90542572	OP-TC-0489
90542573	OP-TC-0488
90542574	OP-BJ-0312
90542995	OP-BJ-5583
90576775	OP-SB-1380
90576788	OP-WP-0569
90576789	OP-WP-0568
90581398	OP-SB-8963
9105983	K150002
9109134	OP-SB-15690
9109852	RE-WP-1052
9109853	RE-WP-1053
9109909	RE-BJ-1040
9109940	RE-WP-1052
9109941	RE-WP-1053
9111641	RE-BJ-4271
9111661	RE-ES-4273
9112047	RE-WP-1052
9112048	RE-WP-1053
91160037	NI-AX-2219
91160037	OP-RK-15060
91160038	K150228
91160043	RE-ES-0853
91160044	RE-ES-0852
91165701	OP-SB-10171
91166461	NI-WP-2226
91166461	RE-WP-2300
91166462	NI-WP-2224
91166462	RE-WP-2301
91166462	RE-WP-7761
91167000	RE-LS-2095
9118127	OP-ES-0514
9118128	OP-AX-1230

...VAUXHALL	MOOG
9118128	OP-RK-15054
9150554	RE-BJ-2098
9156605	OP-SB-1382
9160392	RE-WP-1052
9160393	RE-WP-1053
9160394	RE-SB-3846
9160395	RE-SB-3845
9160498	RE-LS-1058
9160499	RE-LS-1059
9160511	OP-SB-7215
9160554	RE-BJ-2098
9160555	RE-BJ-1040
9161560	K150133
9161561	RE-AX-2097
9161562	RE-ES-0809
9161563	RE-ES-0810
9191309	OP-SB-3816
9193088	OP-DS-5587
9193098	OP-ES-5589
9193099	OP-ES-5588
9196394	OP-BJ-0812
9199576	OP-SB-0203
9199961	OP-SB-0203
920007	OP-AX-10486
920011	OP-ES-13924
920355	OP-TC-7976
920373	OP-ES-1501
920374	OP-ES-1502
9204751	DE-ES-0639
9204752	OP-AX-2194
9208987	DE-TC-0125
9210168	DE-ES-0639
9210270	OP-TC-3619
9210351	OP-ES-3620
9212530	OP-TC-3619
9214826	OP-TC-3619
9217259	DE-TC-0125
9223022	OP-SB-10168
92245258	OP-SB-10071
9228477	OP-WP-0211
93161884	RE-BJ-7762
93167687	OP-AX-10118
93167688	OP-ES-10119
93167689	OP-ES-10120
93168675	OP-LS-12602
93169261	OP-DS-5587
93169262	OP-DS-5586
93169283	OP-ES-5588
93171448	OP-SB-2812
93172254	OP-ES-2081
93172255	OP-ES-2082
93172256	OP-AX-2083
93172256	OP-RK-15074
93174598	OP-BJ-1899
93174599	OP-BJ-1895
93175520	OP-AX-3814

...VAUXHALL	MOOG
93178160	OP-AX-5689
93179557	OP-AX-1230
93179557	OP-AX-2816
93179557	OP-RK-15054
93179557	OP-RK-15073
93179558	OP-ES-2819
93179559	OP-ES-2818
93181229	OP-AX-2817
93181230	OP-AX-5163
93181232	OP-ES-2818
93181233	OP-ES-2819
93181662	OP-AX-5162
93186321	OP-ES-5579
93186330	OP-AX-4162
93186332	OP-ES-2819
93186333	OP-ES-2818
93186537	OP-ES-0514
93187434	OP-AX-3814
93187435	OP-AX-5689
93187626	OP-AX-2083
93187626	OP-RK-15074
93188302	OP-SB-0203
93188303	OP-SB-0203
93188808	OP-BJ-4870
93189022	OP-AX-4160
93189023	OP-ES-4921
93189024	OP-ES-4922
93189450	OP-AX-2816
93189450	OP-RK-15073
93189451	OP-AX-4162
93189668	OP-AX-2817
93189669	OP-AX-5163
93189670	OP-AX-5162
93190905	OP-BJ-1899
93190906	OP-BJ-1895
93190907	OP-BJ-4870
93191521	OP-AX-4162
93191526	OP-AX-2816
93191526	OP-RK-15073
93191671	OP-AX-2083
93191671	OP-RK-15074
93191672	OP-AX-3814
93192415	OP-AX-1893
93192416	OP-AX-1894
93192416	OP-RK-15063
93192417	OP-ES-1892
93192418	OP-AX-7452
93192419	OP-ES-5569
93192420	OP-AX-5691
93192421	OP-AX-0432
93192421	OP-RK-15058
93192431	K150236
93192445	OP-AX-5576
93192446	OP-ES-0480
93192673	RE-LS-1058
93192674	RE-LS-1059

...VAUXHALL	MOOG
93192689	RE-WP-1052
93192690	RE-WP-1053
93193134	SZ-SB-5085
93194002	SZ-AX-5082
93194035	SZ-ES-8478
93194853	OP-TC-8749
93194855	OP-TC-8750
93194857	RE-BJ-7905
93195093	SZ-LS-5081
93196241	RE-AX-2097
93196540	OP-AX-4160
93196541	OP-ES-4921
93196542	OP-ES-4922
93196777	OP-AX-8746
93196778	OP-AX-8747
93196923	RE-BJ-2302
93197214	RE-TC-10093
93197215	RE-TC-10092
93197233	OP-BJ-12502
93197233	OP-BJ-8965
93197325	OP-LS-10475
93197327	OP-SB-13630
93197332	OP-LS-10476
93197335	OP-SB-13923
93338568	OP-WP-1903
93338569	OP-WP-1902
93388568	OP-WP-1903
93388569	OP-WP-1902
93851117	NI-WP-2224
93851117	RE-WP-2301
93851118	NI-WP-2226
93851118	RE-WP-2300
93853464	RE-WP-7761
93853465	RE-WP-7760
93856473	OP-SB-10171
93858141	NI-WP-2224
93858141	RE-WP-2301
93858864	RE-WP-7761
93858865	RE-WP-7760
93858917	RE-LS-2095
93862135	RE-WP-7760
93862136	RE-WP-7761
94374424	OP-BJ-2040
94419408	OP-ES-1501
94419409	OP-ES-1502
94459453	OP-BJ-0177
94459465	OP-BJ-1504
94459480	OP-ES-1501
94459480	OP-ES-1502
94459481	OP-ES-1501
94459481	OP-ES-1502
94540668	OP-WP-14709
94540669	OP-WP-14710
95025705	OP-WP-14710
95025706	OP-WP-14709
95509251	OP-BJ-12502

...VAUXHALL	MOOG
95511247	FI-LS-8086
95514914	OP-AX-13415
95914910	OP-ES-13924
95915221	OP-AX-13418
95915222	OP-ES-13924
95942519	OP-LS-13685
95942520	OP-LS-13686
95952929	OP-AX-13418
95952930	DE-AX-5752
95954754 (-)	OP-AX-7221
961316765	DE-TC-0125
96268454	OP-WP-0836
96268455	OP-WP-0833
96380586	OP-SB-1386
96391876	OP-DS-0750
96626150	OP-LS-7224
96626235	OP-WP-7222
96626236	OP-WP-7223
96626247	OP-LS-4707
96626248	OP-LS-4706
96626667	OP-ES-4746
96809676	OP-SB-8780
96810751	OP-SB-10445
96819161	OP-WP-7222
96819161 (-)	OP-SB-8779
96819161 (-)	OP-SB-8780
96819162	OP-WP-7223
96819162 (-)	OP-SB-8779
96819162 (-)	OP-SB-8780
96996450	OP-LS-4707
96996451	OP-LS-4706
96996460	OP-LS-7224
97018227	OP-LS-1786
97018228	OP-LS-2811
97020953	OP-ES-1501
97020953	OP-ES-1502
97020954	OP-ES-1501
97020954	OP-ES-1502
97125013	OP-LS-1786
97125014	OP-LS-2811
97184819	OP-AX-3537
97184820	K150189
97184821	OP-ES-2814
99170	SZ-ES-2562
99810	SZ-ES-2562

VOLVO	MOOG
1061659 (-)	FD-SB-10674
1061668 (-)	FD-SB-10853
1205658	VV-ES-1090
1205658	VV-ES-1091
1205658	VV-ES-3283
1205659	VV-AX-3273
1205666	VV-AX-3275
1205811	VV-BJ-5294
1206667	VV-LS-2381

...VOLVO	MOOG
1228799	VV-BJ-5292
1228800	VV-BJ-5293
1229165	VV-SB-5488
1229297	VV-SB-2352
1229391	VV-LS-1099
1229573	VV-BJ-3284
1229628	VV-SB-5488
1234382	VV-BJ-3653
1270477	VV-BJ-3284
1272924	K150012
1272925	K150012
1272947	VV-AX-3282
1273126	VV-AX-5531
1273136	VV-BJ-5294
1273139	VV-BJ-5292
1273140	VV-BJ-5293
1273143	VV-BJ-5292
1273146	VV-BJ-5293
1273622	VV-SB-4474
1273819	VV-BJ-3284
1329655	VV-SB-2351
1329675	VV-ES-3283
1329730 (-)	FD-SB-10674
1330427	VV-SB-4529
1330819	VV-BJ-5294
1330820	VV-BJ-5293
1330821	VV-BJ-5292
1330973	VV-SB-4530
1348231	FD-SB-10174
1359347	VV-AX-5531
1359590	VV-BJ-3284
1359599	VV-SB-2352
1377416	FD-LS-5699
1387356	VV-AX-5530
1387451	VV-AX-5529
1387463	VV-AX-5539
1387860	VV-DS-0019
1425853	FD-LS-5699
1433271	FD-AX-5110
1433271	FD-RK-15038
1437192	FD-SB-14762
1458773	FD-WP-5113
1466186	FD-WP-5113
1466186 (-)	FD-SB-5114
1466186 (-)	FD-SB-5115
1466186 (-)	FD-SB-5116
1466188	FD-WP-5112
1466188 (-)	FD-SB-5114
1466188 (-)	FD-SB-5115
1466188 (-)	FD-SB-5116
1469024	FD-WP-5113
1469026	FD-WP-5112
1477858	FD-SB-14991
1500682	FD-LS-10437
1507181	FD-WP-5113
1507182	FD-WP-5112

...VOLVO	MOOG
1596574	FD-AX-5110
1596574	FD-RK-15038
22715985	VV-ES-5549
270475	K150077
270477	VV-BJ-3284
2704773	VV-BJ-3284
270575	K150077
271389	VV-AX-5530
2713899	VV-AX-5530
271469	K150076
271591	VV-BJ-5554
271598	VV-ES-5549
2715985	VV-ES-5549
271599	VV-ES-5548
2715993	VV-ES-5548
271601	K150211
271628	VV-WP-1526
271629	VV-WP-1525
271631	VV-RK-8416
271631	VV-SB-2321
271901	VV-WP-1526
271902	VV-WP-1525
272227	VV-WP-3658
272273	VV-WP-3657
272336	VV-WP-3657
272337	VV-WP-3658
272416	VV-ES-2858
272417	VV-ES-3146
272418	K150212
272428	VV-AX-3147
274117	VV-BJ-5294
274118	VV-BJ-5292
274119	VV-BJ-5293
274175	VV-ES-1090
274176	VV-ES-1091
274179	VV-AX-7868
274179	VV-RK-15051
274179	VV-RK-15056
274186	VV-BJ-0893
274191	VV-ES-4021
274192	VV-ES-4019
274193	VV-BJ-0893
274224	VV-AX-2241
274225	VV-ES-2239
274226	VV-ES-2240
274303	VV-LS-1119
274351	VV-ES-4021
274352	VV-ES-4019
274353	VV-AX-0398
274354	K150222
274377	VV-BJ-4399
274456	VV-LS-1119
274496	VV-ES-1090
274497	VV-ES-1091
274498	VV-ES-4021
274499	VV-ES-4019

...VOLVO	MOOG
274500	FD-ES-3665
274500	FD-ES-3891
274501	FD-ES-3665
274501	FD-ES-3891
274502	FD-AX-3957
274502	FD-AX-8855
274523	VV-BJ-4399
274524	VV-BJ-0893
274544	VV-BJ-0893
274548	VV-BJ-0893
274573	VV-BJ-4399
274576	VV-ES-4021
274582	VV-ES-4019
277227	VV-WP-3658
30616824	VV-SB-10086
30616825	VV-SB-10086
30616985	VV-SB-13954
30620785	VV-LS-6592
30620786	VV-LS-7324
30635227	VV-WP-3950
30635228	VV-WP-3951
30635229	VV-WP-0360
30635230	VV-WP-0379
30635231	VV-TC-8889
30635232	VV-TC-8890
30639368	VV-SB-4416
30639780	VV-TC-4400
30639781	VV-TC-4401
30639961	FD-SB-14048
30645401	VV-SB-7955
30645845	VV-TC-4400
30645846	VV-TC-4401
30645847	VV-SB-4415
30647419	FD-SB-14048
30647512	FD-SB-14048
30647920	VV-LS-1096
30647921	VV-DS-0019
30647995	VV-DS-0019
30648461	FD-LS-5111
30652259	VV-SB-10086
30666271	VV-SB-10050
30666799	FD-SB-14048
30666821	FD-SB-0191
30678440	FD-SB-14991
30678440	VV-SB-3648
30681546	VV-SB-9882
30683067	FD-TC-0952
30683248	VV-BJ-8740
30683249	VV-BJ-8740
30714126	VV-WP-3640
30714127	VV-WP-3645
30714128	VV-SB-3647
30714422	VV-WP-3640
30714422	VV-WP-4871
30714423	VV-WP-3645
30714466	FD-LS-3662

...VOLVO	MOOG
30714678	VV-LS-1096
30714682	FD-SB-14048
30714683	FD-SB-14048
30714685	VV-LS-1119
30714686	VV-DS-0019
30714968	VV-SB-10048
30714977	VV-SB-13509
30723103	FD-ES-3665
30730829	VV-WP-4871
30730830	VV-WP-3645
30748230	VV-WP-3645
30748231	VV-WP-3640
30748231	VV-WP-4871
30748889	VV-SB-7954
30760236	FD-LS-10437
30760237	FD-LS-10437
30760238	FD-LS-10437
30760279	VV-WP-4872
30760586	VV-TC-12637
30760587	VV-TC-12638
30760678	FD-LS-5699
30760806	VV-ES-4021
30760807	VV-ES-4019
30760921	FD-SB-14762
30761718	VV-ES-1091
30761719	VV-ES-1090
30776248	FD-ES-5109
30776249	FD-ES-5108
30776250	FD-AX-5110
30776250	FD-RK-15038
30776255	VV-AX-8739
30776283	FD-AX-3957
30776283	FD-AX-8855
30776323	VV-ES-4021
30776324	VV-ES-4019
30776425	VV-AX-8739
30818091	VV-LS-6592
30818092	VV-LS-6592
30818096	MI-WP-2770
30818097	MI-WP-2769
30818111	VV-SB-10051
30818465	VV-SB-10049
30818467	VV-SB-3633
30821650	MI-BJ-10371
30821650	VV-WP-1093
30821651	MI-BJ-10371
30821651	VV-WP-1094
30851257	VV-SB-10105
30852103	VV-LS-1432
3086398	VV-WP-1093
3086398	VV-WP-1094
30863988	VV-WP-1093
30863989	VV-WP-1094
30864209	VV-WP-1094
30870695	HY-ES-1657
30870695	MI-ES-2937

...VOLVO	MOOG
308706951	MI-ES-2937
30871221	VV-SB-10105
30871770	VV-LS-0014
30872510	VV-SB-3632
30872511	VV-SB-3630
30873100	VV-LS-0014
30875012	HY-ES-1657
30875012	MI-ES-2937
30875399	VV-SB-10086
30875457	VV-SB-13955
30883988	VV-WP-1093
30883989	VV-WP-1094
30884179	VV-LS-2112
30884358	VV-LS-0014
30884360	VV-LS-7324
30884518	VV-SB-10720
30887025	VV-WP-1093
30887033	VV-WP-1094
30887469	VV-WP-1093
30887470	VV-WP-1094
30887653	VV-WP-3638
30887654	VV-WP-3639
30889584	VV-SB-10086
30889962	VV-WP-1093
30889963	VV-WP-1094
31 317 248	FD-SB-13761
31 340 231 (-)	VV-BJ-13892
31 340 232 (-)	VV-BJ-13891
31200775	FD-WP-5113
31200776	FD-WP-5112
31201180	VV-WP-4872
31201180 (-)	VV-BJ-4873
31201181	VV-WP-4871
31201181 (-)	VV-BJ-4873
31201228	VV-ES-4021
31201229	VV-ES-4019
31201412	FD-ES-3665
31201412	FD-ES-3891
31201413	FD-ES-3665
31201413	FD-ES-3891
31201485	VV-BJ-4399
31201602	VV-LS-1119
31201603	VV-LS-1096
31201817	FD-AX-3957
31201817	FD-AX-8855
31202228	VV-BJ-8740
31202229	VV-BJ-8740
31202761	VV-TC-15119
31202762	VV-TC-15120
31202762 (-)	VV-SB-15121
31212191	VV-SB-13509
31212548	FD-LS-3662
31212730	VV-DS-0019
31212781	FD-WP-5113
31212782	FD-WP-5112
31212979	VV-WP-3640

...VOLVO	MOOG
31212979	VV-WP-4871
31212980	VV-WP-3645
31262037	VV-WP-4872
31262039	VV-WP-4871
31262475	VV-TC-15117
31277343	FD-BJ-7296
31277343	FD-WP-5112
31277344	FD-BJ-7296
31277344	FD-WP-5113
31277345	VV-BJ-8740
31277462	VV-WP-4872
31277463	VV-WP-4871
31277464	VV-WP-3640
31277464	VV-WP-4871
31277464	VV-WP-4872
31277465	VV-WP-3645
31277620 (-)	VV-SB-13887
31277620 (-)	VV-SB-13888
31277621 (-)	VV-SB-13887
31277621 (-)	VV-SB-13888
31277675	FD-TC-13515
31277881	VV-SB-4416
31277952	VV-SB-7955
31280000	FD-ES-5108
31280001	FD-ES-5109
31280002	FD-AX-5110
31280002	FD-RK-15038
31280408	VV-AX-8832
31280658	FD-AX-5110
31280658	FD-RK-15038
31302344	FD-ES-5108
31302345	FD-ES-5109
31304040	VV-SB-4415
31304045	VV-TC-4400
31304046	VV-TC-4401
31317247	FD-SB-13750
31317271	FD-LS-10901
31317661	FD-WP-5112
31317662	FD-WP-5113
31317779	FD-AX-8855
31317781	VV-ES-13895
31317819	VV-ES-13896
31329966	FD-LS-3662
31340128	VV-TC-15117
31340231	VV-WP-13894
31340232	VV-WP-13893
31340273	FD-LS-3667
31340511	VV-SB-13845
31387280	FD-SB-12518
31387281	FD-SB-12519
31406337	FD-SB-12518
31406350	FD-SB-12519
31406735	VV-TC-15119
31406736	VV-TC-15120
31406736 (-)	VV-SB-15121
31406746	VV-TC-15119

...VOLVO	MOOG
31406747	VV-TC-15120
31406747 (-)	VV-SB-15121
31429320	VV-TC-15118
31429321	VV-TC-15117
3209407	VV-LS-3655
3209408	VV-LS-3143
3211955	VV-ES-3278
3211956	VV-BJ-3279
3265974	VV-ES-3278
3268631	VV-BJ-3279
3268829	VV-AX-3277
3268834	K150013
3268835	K150013
3270523	VV-BJ-5513
3293736	VV-AX-3285
3342824	VV-AX-5556
3343641	K150013
3345796	K150153
3345797	VV-AX-0027
3350052	VV-LS-13272
3410364	VV-ES-0367
3410369	VV-AX-5511
3410412	VV-AX-5556
3410519	VV-BJ-5513
3411022	K150013
3416129	VV-LS-5514
3416130	VV-LS-5515
3434868	VV-LS-4170
3443998	VV-WP-6969
3443999	VV-WP-6981
3448334	VV-ES-0367
3465482	VV-BJ-5513
3467713	VV-LS-5514
3467714	VV-LS-5515
3480012	VV-ES-0367
3507923	VV-SB-13507
3516122	VV-LS-13272
3516151	VV-SB-10047
3516325	K150012
3516496	VV-SB-7235
3516944	VV-ES-1090
3516944	VV-ES-1091
3516944	VV-ES-3283
3524221	VV-SB-13509
3530050	VV-LS-13272
3530051	VV-LS-13272
3530202	VV-SB-7234
3530230	VV-LS-1099
35303049	VV-LS-4171
35461896	VV-SB-10046
3546266	VV-AX-5551
35462662	VV-AX-5551
3546267	VV-ES-5549
3546268	VV-ES-5548
3546524	VV-BJ-5554
3546730	VV-SB-13273

...VOLVO	MOOG
410369	VV-AX-5511
6800251	VV-SB-2321
6819057	VV-SB-4519
6819253	VV-LS-0482
6G913280AA	FD-AX-5110
6G913280AA	FD-RK-15038
6G913280AB	FD-AX-5110
6G913280AB	FD-RK-15038
6G915C486XAA	FD-LS-5699
6G915C486XAB	FD-LS-5699
6G9N3A052DG	FD-WP-5113
6G9N3A052DH	FD-WP-5113
6G9N3A053DH	FD-WP-5112
7G9N3395DA	VV-BJ-8740
7G9N3A052BA	FD-WP-5113
7G9N3A052BB	FD-WP-5113
7G9N3A053BA	FD-WP-5112
7G9N3A053BB	FD-WP-5112
8416129	VV-LS-5514
8416130	VV-LS-5515
8623576	FD-LS-3667
8623955	VV-WP-3950
8623956	VV-WP-3951
8623957	VV-WP-0360
8623958	VV-WP-0379
8626031	VV-DS-0019
8628491	VV-WP-1526
8628492	VV-WP-1525
8628493	VV-WP-3657
8628494	VV-WP-3658
8628495	VV-WP-1526
8628496	VV-WP-1525
8628497	VV-WP-3657
8628497 (-)	VV-SB-3086
8628498	VV-WP-3658
8628498 (-)	VV-SB-3086
8628499	VV-WP-1526
8628500	VV-WP-1525
8628703	VV-DS-0019
8628726	VV-DS-0019
8630604	VV-SB-0423
8630605	VV-SB-13377
8634457	VV-SB-10046
8634457	VV-SB-10048
8634736	VV-LS-1119
8634869	VV-LS-1096
8649541	VV-WP-3950
8649542	VV-WP-3951
8649543	VV-WP-0360
8649544	VV-WP-0379
8649545	VV-TC-8889
8649546	VV-TC-8890
8671921	FD-TC-0951
8672220	VV-SB-7208
8672445	VV-LS-1119
8672446	VV-LS-1096

...VOLVO	MOOG
8672449	VV-LS-1119
8678497	VV-SB-13514
9140095	VV-WP-1526
9140096	VV-WP-1525
9140504	VV-AX-5539
9140505	VV-AX-5529
9140767	VV-DS-0019
9140788	VV-AX-9950
9140847	VV-SB-10047
9140976	VV-WP-3657
9140977	VV-WP-3658
9157576	VV-SB-13510
9157579	VV-SB-7955
9157725	VV-LS-1099
91577254	VV-LS-1099
9157952	VV-SB-13513
9169080	VV-LS-1096
9169533	VV-WP-1526
9169534	VV-WP-1525
9173761	VV-SB-7208
9186730	VV-WP-3657
9186731	VV-WP-3658
9191409	K150180
9191410	VV-AX-3518
91914101	VV-AX-3518
9192917	VV-WP-3658
9200154	VV-SB-7954
9443882	VV-SB-0424
9461524	VV-SB-10047
9461626	VV-SB-0423
9465971	VV-SB-0424
9465975	VV-SB-13513
9473207	VV-SB-13509
9492105	VV-WP-3950
9492106	VV-WP-3951
9492287	VV-WP-1526
9492288	VV-WP-1525
9492291	VV-WP-3657
9492292	VV-WP-3658
9492530	VV-WP-1526
9492531	VV-WP-1525
9492532	VV-WP-3657
9492558	VV-SB-13509
9492671	VV-WP-1526
9492672	VV-WP-1525
9492673	VV-WP-3657
9492674	VV-WP-3658
9492837	VV-LS-0482
9492914	VV-WP-1526
9492915	VV-WP-1525
9492916	VV-WP-3657
9492917	VV-WP-3658
98AG5500AG (-)	FD-SB-10674
MB242358	MI-SB-9934
MB338620	MI-SB-9934
MR272118	VV-LS-1432

VW	MOOG
007350278N	SK-AX-0064
021156110A	SE-TC-4091
021156110B	SE-TC-7509
1009649	VO-SB-6815
113407361C	VO-BJ-0625
113407361E	VO-BJ-0625
113407361F	VO-BJ-0625
113415811C	VO-ES-0615
113415812C	VO-ES-0617
113415813D	VO-ES-9023
115420020	SK-WP-0661
115420021	SK-WP-0660
115420240	SK-BJ-8223
115422291	SK-SB-5450
115500420	SK-AX-3884
115500440	SK-ES-8222
131405361E	VO-BJ-0609
131405361F	VO-BJ-0609
131405371G	VO-BJ-0610
131405371H	VO-BJ-0610
131405371J	VO-BJ-0610
131415812	VO-ES-0594
131415813D	VO-ES-0618
131415813E	VO-ES-0618
131415813F	VO-ES-0618
131415821A	VO-ES-0614
133407361	VO-BJ-3222
133407361B	VO-BJ-3222
170419804A	VO-DS-3224
171407153D	VO-WP-5088
171407153D	VO-WP-5089
171407181	VO-SB-1325
171407181A	VO-SB-1325
171407182D	VO-SB-1326
171407182E	VO-SB-1326
171407362C	VO-BJ-3227
171407365C	VO-BJ-3227
171407365D	VO-BJ-3227
171407365F	VO-BJ-3254
171407365G	VO-BJ-3254
171419804	VO-DS-3224
171419804A	VO-DS-3224
171419807A	VO-AX-3225
171419811	VO-ES-3226
171419811A	VO-ES-3226
171419812	VO-ES-3226
171419821	VO-AX-3225
171419821A	VO-AX-3225
171513333	VO-SB-10061
175419804	VO-DS-3224
175422831	K150029
191407151A	VO-WP-8209
191407151B	VO-WP-8209
191407151B	VO-WP-8210
191407153	VO-WP-8210
191407181	VO-SB-1358

...VW	MOOG
191407181A	VO-SB-1358
191407181B	VO-SB-1358
191407181D	VO-SB-1358
191407181E	VO-SB-1358
191407182	VO-SB-1329
191407190A	VO-SB-7418
191407365	VO-BJ-7108
191407365A	VO-BJ-7108
191407365B	VO-BJ-7108
191411314	VO-SB-6725
191411315	VO-LS-1516
191411315A	SE-LS-2850
191411315B	VO-LS-1516
191411329	VO-SB-7958
191412329	VO-SB-4861
191419803	VO-DS-7142
191419803A	VO-DS-7142
191419804	VO-DS-7105
191419804A	VO-DS-7105
191419811	VO-ES-7139
191419812	VO-ES-7106
191419821	VO-AX-7107
191419831	K150024
191422803	VO-DS-7137
191422803A	VO-DS-7137
191422804	VO-DS-7140
191422804A	VO-DS-7140
191422821A	VO-AX-7138
191422821C	VO-AX-0383
191422831	K150029
191501541	VO-SB-1189
191512119	VO-SB-10057
191512333	VO-SB-10061
191512335	VO-SB-10061
191512339	VO-SB-10061
191512340	VO-SB-10061
1H0407151	VO-WP-8221
1H0407151	VO-WP-8254
1H0407151A	VO-WP-0530
1H0407152	VO-WP-0529
1H0407365	VO-BJ-7184
1H0411314	VO-SB-6788
1H0412365A	VO-SB-10053
1H0419803	VO-DS-7180
1H0419803A	VO-DS-7180
1H0419804	VO-DS-7182
1H0419804A	VO-DS-7182
1H0419821	VO-AX-7181
1H0419821A	VO-AX-7181
1H0422803	VO-DS-7190
1H0422803 (-)	VO-AX-8286
1H0422803A	VO-DS-7190
1H0422803A (-)	VO-AX-7183
1H0422803B	VO-DS-8204
1H0422803B (-)	VO-AX-0383
1H0422803C	VO-DS-8204

...VW	MOOG
1H0422803C (-)	VO-AX-0383
1H0422803D	VO-DS-7190
1H0422804	VO-DS-7191
1H0422804 (-)	VO-AX-8286
1H0422804A	VO-DS-7191
1H0422804B	VO-DS-8205
1H0422804C	VO-DS-8205
1H0422804D	VO-DS-7191
1H0422821A	VO-AX-7183
1H0422831	K150029
1H0422831B	K150094
1H0501541	VO-SB-4169
1H0501541A	VO-SB-4169
1H9501541	VO-SB-4445
1J0199429	VO-SB-4523
1J0407151A	VO-WP-1552
1J0407151A	VO-WP-1553
1J0407151B	VO-WP-1552
1J0407151B	VO-WP-1553
1J0407151C	VO-WP-1552
1J0407151C	VO-WP-1553
1J0407181	VO-SB-1369
1J0407181A	VO-SB-1369
1J0407365A	VO-BJ-8287
1J0407365B	VO-BJ-8287
1J0407365C	VO-BJ-8287
1J0407365D	VO-BJ-8287
1J0407365H	VO-BJ-8287
1J0407365J	VO-BJ-8287
1J0407366A	VO-BJ-8288
1J0407366B	VO-BJ-8288
1J0407366C	VO-BJ-8288
1J0407366D	VO-BJ-8288
1J0407366H	VO-BJ-8288
1J0407366J	VO-BJ-8288
1J0411314	VO-SB-6818
1J0411314C	AU-SB-4847
1J0411314G	VO-SB-6796
1J0411314P	VO-SB-7422
1J0411314R	VO-SB-13250
1J0411314S	VO-SB-6818
1J0411314T	VO-SB-6796
1J0411315	VO-LS-0475
1J0411315	VO-LS-4916
1J0411315B	VO-LS-0475
1J0411315B	VO-LS-4916
1J0411315C	VO-LS-0475
1J0411315C	VO-LS-4916
1J0411315D	VO-LS-2406
1J0411315E	VO-LS-0475
1J0411315G	VO-LS-0475
1J0411315G	VO-LS-4916
1J0411315H	VO-LS-0475
1J0411315H	VO-LS-7327
1J0411315J	VO-LS-0475
1J0411315J	VO-LS-4916

...VW	MOOG
1J0411315K	VO-LS-0475
1J0411315K	VO-LS-7327
1J0411316D	VO-LS-0456
1J0411327	VO-SB-14628
1J0412249	VO-SB-10052
1J0412249	VO-SB-10053
1J0412249	VO-SB-10067
1J0412331B	VO-SB-10053
1J0412331C	VO-SB-10053
1J0422803	VO-DS-8281
1J0422803A	VO-DS-1549
1J0422803A	VO-DS-8281
1J0422803B	VO-AX-13741
1J0422803B	VO-DS-1549
1J0422803B	VO-RK-15029
1J0422803B	VO-RK-15052
1J0422803B	VO-RK-15061
1J0422803C	VO-DS-8281
1J0422803E	VO-DS-1549
1J0422803H	VO-DS-1549
1J0422804	VO-DS-8284
1J0422804A	VO-DS-1548
1J0422804A	VO-DS-8284
1J0422804B	VO-AX-13741
1J0422804B	VO-DS-1548
1J0422804C	VO-DS-8284
1J0422804E	VO-DS-1548
1J0422804H	VO-DS-1548
1J0422807	VO-AX-8286
1J0422807A	VO-AX-8286
1J0422807B	VO-RK-15029
1J0422807B	VO-RK-15052
1J0422807B	VO-RK-15061
1J0422807E	VO-RK-15029
1J0422807E	VO-RK-15052
1J0422807E	VO-RK-15061
1J0422811	VO-ES-8283
1J0422811A	VO-ES-8283
1J0422811B	VO-ES-1507
1J0422811E	VO-ES-1507
1J0422812	VO-ES-8285
1J0422812A	VO-ES-8285
1J0422812B	VO-ES-1506
1J0422812B	VO-ES-8285
1J0422812E	VO-ES-1506
1J0422821B	VO-AX-13741
1J0422821B	VO-RK-15029
1J0422821B	VO-RK-15052
1J0422821B	VO-RK-15061
1J0422831	K150182
1J0422831B	K150182
1J0422831B	K150231
1J0501541C	VO-SB-0042
1J0501541D	VO-SB-4857
1J0505145A	VO-SB-10130
1J0505145B	VO-SB-10130

...VW	MOOG
1J0505171B	VO-SB-10131
1J0505203	VO-SB-10179
1J0505365D	VO-SB-10179
1J0505365K	VO-SB-10179
1J0505365L	VO-SB-10179
1J0505365N	VO-SB-10179
1J0505466B	VO-LS-3680
1J0505466C	AU-LS-4193
1J0513353B	VO-SB-10063
1J0513353C	VO-SB-10063
1J0513353D	VO-SB-10063
1J0513353G	VO-SB-10063
1K0199231G	VO-SB-0430
1K0199231J	VO-SB-0430
1K0199232G	VO-SB-2337
1K0199232J	VO-SB-2337
1K0407151AA	VO-WP-1862
1K0407151AC	VO-WP-1865
1K0407151AE	VO-WP-1862
1K0407151AH	VO-WP-1862
1K0407151BB	VO-WP-13307
1K0407151BC	VO-WP-1862
1K0407151BE	VO-WP-13307
1K0407151BG	VO-WP-13307
1K0407151M	VO-WP-1865
1K0407151P	VO-WP-1862
1K0407151Q	VO-WP-1862
1K0407151R	VO-WP-1865
1K0407152AA	VO-WP-1861
1K0407152AC	VO-WP-1864
1K0407152AE	VO-WP-1861
1K0407152AH	VO-WP-1861
1K0407152BB	VO-WP-13308
1K0407152BC	VO-WP-1861
1K0407152BD	VO-WP-1861
1K0407152BE	VO-WP-13308
1K0407152BG	VO-WP-13308
1K0407152M	VO-WP-1864
1K0407152P	VO-WP-1861
1K0407152Q	VO-WP-1861
1K0407152R	VO-WP-1864
1K0407182	VO-SB-0428
1K0407182A	VO-SB-0428
1K0407183E	SE-SB-0104
1K0407183M	VO-SB-10844
1K0407183P	VO-SB-10844
1K0407365B	VO-BJ-1860
1K0407365C	VO-BJ-1860
1K0407365E	VO-BJ-1860
1K0407366B	VO-BJ-1859
1K0407366C	VO-BJ-1859
1K0407366E	VO-BJ-1859
1K0411315B	VO-LS-1870
1K0411315J	VO-LS-1870
1K0411315K	VO-LS-1870
1K0411315P	VO-LS-1870

...VW	MOOG
1K0411315R	VO-LS-1870
1K0412249B	VO-SB-10066
1K0423810A	VO-AX-1867
1K0423810A	VO-RK-15071
1K0423811A	VO-ES-10703
1K0423811A	VO-ES-1868
1K0423811B	VO-ES-1868
1K0423811C	VO-ES-10703
1K0423811C	VO-ES-1868
1K0423811D	VO-ES-10703
1K0423811E	VO-ES-10703
1K0423811E	VO-ES-1868
1K0423811F	VO-ES-1868
1K0423811G	VO-ES-10703
1K0423811G	VO-ES-1868
1K0423811J	VO-ES-10703
1K0423811J	VO-ES-1868
1K0423811K	VO-ES-10703
1K0423811K	VO-ES-1868
1K0423812A	VO-ES-10704
1K0423812A	VO-ES-1869
1K0423812B	VO-ES-1869
1K0423812C	VO-ES-10704
1K0423812C	VO-ES-1869
1K0423812D	VO-ES-10704
1K0423812E	VO-ES-10704
1K0423812E	VO-ES-1869
1K0423812F	VO-ES-1869
1K0423812G	VO-ES-10704
1K0423812G	VO-ES-1869
1K0423812J	VO-ES-10704
1K0423812J	VO-ES-1869
1K0423812K	VO-ES-10704
1K0423812K	VO-ES-1869
1K0426811E	VO-ES-1868
1K0501529E	VO-LS-0584
1K0501529F	VO-LS-0584
1K0501529H	VO-LS-0584
1K0501529J	VO-LS-0584
1K0501530B	VO-LS-2205
1K0501530C	VO-LS-2205
1K0501541C	VO-SB-7914
1K0505145E	VO-SB-8447
1K0505145F	VO-SB-8448
1K0505145G	VO-SB-8447
1K0505145H	VO-SB-8448
1K0505145J	VO-SB-8447
1K0505145K	VO-SB-8448
1K0505171C	VO-SB-7916
1K0505173C	VO-SB-7916
1K0505203A	VO-SB-8812
1K0505223E	VO-TC-10775
1K0505223H	VO-TC-10775
1K0505223K	VO-TC-10775
1K0505224E	VO-TC-10776
1K0505224H	VO-TC-10776

...VW	MOOG
1K0505224K	VO-TC-10776
1K0505279A	VO-SB-8811
1K0505311AA	VO-TC-8737
1K0505311AB	VO-TC-8737
1K0505311J	VO-TC-8737
1K0505311R	VO-TC-8737
1K0505311S	VO-TC-8737
1K0505311T	VO-TC-8737
1K0505323H	VO-TC-0586
1K0505323N	VO-TC-0586
1K0505323P	VO-TC-0586
1K0505465AA	VO-LS-0418
1K0505465C	VO-LS-0418
1K0505465C (-)	VO-SB-15105
1K0505465J	VO-LS-0418
1K0505465J (-)	VO-SB-15105
1K0505465K	VO-LS-0418
1K0505465K (-)	VO-SB-15105
1K0505465R	VO-LS-0418
1K0505541C	VO-SB-4930
1K0505541D	VO-SB-4930
1K0505543A	VO-SB-7915
1K0505553	VO-SB-12548
1K0505553	VO-SB-7880
1K0505553A	VO-SB-12548
1K0505553A	VO-SB-7880
1K0511327AQ	VO-SB-8444
1K0511327AR	VO-SB-7199
1K0511327AS	VO-SB-7897
1K0511327BA	VO-SB-13843
1K0511439E	VO-SB-7171
1K0513353G	VO-SB-10089
1K0513353H	VO-SB-10090
1K0513353J	VO-SB-10091
1K0513353R	VO-SB-10091
1S0407151	VO-WP-13471
1S0407152	VO-WP-13472
1S0423810A	VO-AX-12501
1S0423811A	VO-ES-13341
1S0423812A	VO-ES-13342
1T0505223F	VO-TC-14579
1T0505224F	VO-TC-14580
251407077	VO-SB-3223
251407077B	VO-SB-3223
251407175	VO-SB-4471
251407179	VO-SB-4466
251407183	VO-SB-4475
251407183B	VO-SB-4475
251407187	VO-BJ-3269
251407187A	VO-BJ-3269
251407187B	VO-BJ-3269
251407187C	VO-BJ-3269
251407361	VO-BJ-3270
251419081	VO-SB-4515
251419803	VO-DS-3266
251419803A	VO-DS-3266

...VW	MOOG
251419803A (-)	VO-AX-3268
251419811	VO-ES-3226
251419831	K150025
251419831A	K150025
281407077	VO-SB-3076
281407179	VO-SB-3081
281407180	VO-SB-3044
281407187	VO-BJ-3245
281407187B	VO-BJ-3245
281407361	VO-BJ-3246
281407361B	VO-BJ-3246
281411045	VO-SB-4535
281415303	VO-DS-3233
281415303B	VO-DS-3233
281415701	VO-ES-3241
281415701E	VO-ES-3241
281415711	VO-ES-3242
281415711A	VO-ES-3242
281415801	VO-DS-0796
281415801D	VO-DS-0796
281415801D	VO-ES-1835
281415801D (-)	VO-ES-1835
281415801D (-)	VO-ES-2027
281415802	VO-DL-3253
281415802A	VO-DL-3253
281415811	VO-ES-3239
281415812	VO-ES-3240
291415711D	VO-ES-7125
2D0 411 041 A	ME-SB-2275
2D0407021	ME-WP-2332
2D0407021B	ME-WP-2332
2D0407022	ME-WP-2333
2D0407022B	ME-WP-2333
2D0407140	ME-SB-2336
2D0407361	AMGK7455
2D0407361	ME-BJ-6345
2D0407361A	AMGK7455
2D0407361A	ME-BJ-6345
2D0407361B	AMGK7455
2D0407361B	ME-BJ-6345
2D0411041B	ME-SB-7765
2D0411051	ME-LS-1977
2D0411052	ME-LS-1978
2D0422613	K150127
2D0422803	ME-AX-6343
2D0422803	ME-RK-15020
2D0422811	ME-ES-6344
2D0422831	K150127
2D0422875	K150127
2D0498831	K150127
2D0511171	ME-SB-10162
2D0511171	ME-SB-2336
2D0511171B	ME-SB-10163
2D0511171C	ME-SB-10163
2D0511329	ME-LS-1979
2D0511413	ME-SB-3650

...VW	MOOG
2D0511413A	ME-SB-7901
2D0511413B	ME-SB-7898
2E0 407 181 C	ME-SB-13486
2E0 407 181 D	ME-SB-13486
2E0407151L	ME-BJ-4952
2E0407151M	ME-BJ-4952
2E0407151M	ME-WP-4950
2E0407152L	ME-BJ-4952
2E0407152L	ME-WP-4951
2E0407152M	ME-BJ-4952
2E0407152M	ME-WP-4951
2E0407473E	ME-SB-7894
2E0407523	ME-SB-5619
2E0407523A	ME-SB-5620
2E0411041C	ME-SB-7893
2E0411317C	ME-LS-4890
2E0411318C	ME-LS-4891
2E0498104	ME-ES-4953
2E0498104A	ME-ES-4953
2E0511051F	ME-LS-5618
2E0511051G	VO-LS-13833
2E0511413G	ME-SB-12547
2E0713491	ME-AX-4874
2E0713491	ME-RK-15043
2E0713501	ME-ES-4953
2E0731501	ME-ES-4953
2H0407021B	VO-WP-13729
2H0407021B (-)	VO-BJ-13732
2H0407022B	VO-WP-13730
2H0407022B (-)	VO-BJ-13732
2H0407077A	VO-SB-13737
2H0407151A	VO-BJ-13732
2H0407151A	VO-BJ-13733
2H0407151A	VO-WP-13727
2H0407152A	VO-BJ-13732
2H0407152A	VO-BJ-13733
2H0407152A	VO-WP-13728
2H0407182A	VO-SB-13735
2H0407183A	VO-SB-13734
2H0411313B	VO-SB-13731
2H0411313C	VO-SB-13731
2H0411317	VO-LS-13724
2H0411317B	VO-LS-15462
2H0412333A	VO-SB-13736
2H0422817	VO-ES-3058
2H0422818	VO-ES-3059
2K0505465B	VO-LS-3980
2K0505465C	VO-LS-3980
2K0505465E	VO-LS-3980
2K0511413A	VO-SB-7892
2K0511413C	VO-SB-7892
2K0511413D	VO-SB-7892
2K5505465A	VO-LS-3980
311415811B	VO-ES-0615
311415811C	VO-ES-0615
311415812B	VO-ES-0617

...VW	MOOG
311415812C	VO-ES-0617
321413025B	VO-BJ-3222
321413026B	VO-BJ-3222
321419811	VO-ES-3026
321419811A	VO-ES-3026
321501541	VO-SB-4478
321512117	VO-SB-10057
321512117	VO-SB-10059
321512335	VO-SB-10057
333501541	VO-SB-3052
333512143A	VO-SB-10059
357407151	VO-WP-0232
357407153	VO-WP-0232
357407181	VO-SB-1358
357407182	VO-SB-1329
357407182F	VO-SB-1329
357407365	VO-BJ-7154
357407365A	VO-BJ-7154
357411313A	VO-SB-6798
357411314A	VO-SB-6735
357411315	VO-LS-1088
357411315A	VO-LS-1165
357411315C	VO-LS-1088
357411315D	VO-LS-1165
357412249	VO-SB-10067
357412319B	VO-SB-10067
357412329	VO-SB-10056
357412331A	VO-SB-10067
357419803	VO-DS-7155
357419803 (-)	VO-AX-7157
357419803A	VO-DS-7155
357419803A (-)	VO-AX-7157
357419804	VO-DS-7156
357419804A	VO-DS-7156
357422803	VO-AX-7157
357422803 (-)	VO-AX-7159
357422803A	VO-DS-8264
357422803D	VO-DS-8266
357422804A	VO-DS-8265
357422831A	K150094
357422831B	K150146
357501541	VO-SB-3052
357501541A	VO-SB-3052
357512333	VO-SB-10057
357512333C	VO-SB-10059
357512335B	VO-SB-10059
3A0422803E	VO-DS-0771
3A0422804E	VO-DS-0771
3A0422811	VO-ES-7139
3A0422811A	VO-ES-3226
3A0422812	VO-ES-7106
3A0501541	VO-SB-3052
3B0513353	VO-SB-10064
3B7412377A	VO-SB-10065
3C0199231A	VO-SB-5010
3C0199231B	VO-SB-5010

...VW	MOOG
3C0199231D	VO-SB-5010
3C0199231E	VO-SB-5010
3C0407151A	VO-WP-5008
3C0407151A	VO-WP-5009
3C0407151B	VO-WP-5008
3C0407151B	VO-WP-5009
3C0407151E	VO-WP-5008
3C0407151E	VO-WP-5009
3C0407151G	VO-WP-5008
3C0407151G	VO-WP-5009
3C0407365A	VO-BJ-5011
3C0407365B	VO-BJ-5011
3C0407366A	VO-BJ-5012
3C0407366B	VO-BJ-5012
3C0505223C	VO-TC-14977
3C0505223E	VO-TC-14977
3C0505224C	VO-TC-14978
3C0505224E	VO-TC-14978
3C0505541	VO-SB-10574
3C0513353	VO-SB-10089
3C0513353C	VO-SB-10091
443419811B	AU-ES-7149
443419812B	AU-ES-7150
443505351P	AU-TC-7207
443505352P	AU-TC-7219
443511247D	AU-SB-4488
443512331	AU-SB-9328
4A0399415	AU-SB-4525
4A0407151	AU-TC-8200
4A0407152	AU-TC-8201
4A0407181	AU-SB-1037
4A0407183D	AU-SB-1097
4A0411327	AU-SB-1722
4A0411327F	AU-SB-3200
4A0412377CS	AU-SB-8995
4A0419801A	AU-DS-8231
4A0419802A	AU-DS-8232
4A0419811A	AU-ES-8206
4A0419812A	AU-ES-8207
4A0505389	VO-LS-2421
4A0511247	AU-SB-4484
4A0511247B	AU-SB-4508
4A0511249	AU-SB-4500
4B0407515	VO-SB-1362
4B0419801B	VO-DS-8226
4B0419801E	VO-DS-8226
4B0419801M	VO-DS-8226
4B0419811B	VO-ES-8227
4B0419811C	VO-ES-8227
4B0419811E	VO-ES-8227
4B0419811F	VO-ES-8227
4B0501521D	VO-SB-8445
4B0501521E	VO-SB-8445
4B0501522D	VO-SB-8446
4B0501522E	VO-SB-8446
4B0511327	AU-SB-13374

...VW	MOOG
4B3407151A	AU-TC-0723
4B3407151C	AU-TC-0723
4B3407151E	AU-TC-0723
4B3407151K	AU-TC-0723
4B3498998	VO-RK-7925
4D0407151A	VO-TC-8228
4D0407151B	VO-TC-8228
4D0407151C	VO-SB-1363
4D0407151D	VO-TC-8228
4D0407151E	VO-TC-8228
4D0407151G	VO-TC-8228
4D0407151H	VO-TC-8228
4D0407151J	VO-TC-8228
4D0407151K	VO-TC-8228
4D0407151P	VO-TC-8228
4D0407181F	VO-SB-1366
4D0407181H	VO-SB-1366
4D0407182E	VO-SB-1365
4D0407182G	VO-SB-1365
4D0407183AB	VO-SB-1364
4D0407183AC	VO-SB-1364
4D0407183M	VO-SB-1364
4D0407183N	VO-SB-1364
4D0407183P	VO-SB-1364
4D0407183Q	VO-SB-1364
4D0407361	VO-BJ-0370
4D0407505H	AU-TC-8239
4D0407509J	AU-TC-0674
4D0407509K	AU-TC-0674
4D0407510J	AU-TC-0678
4D0407510K	AU-TC-0678
4D0407515C	VO-SB-1362
4D0407516C	VO-SB-1363
4D0407693AC	VO-TC-8229
4D0407693AD	VO-TC-8229
4D0407693E	VO-TC-8229
4D0407693H	VO-TC-8229
4D0407693K	VO-TC-8229
4D0407693N	VO-TC-8229
4D0407694AC	VO-TC-8230
4D0407694AD	VO-TC-8230
4D0407694E	VO-TC-8230
4D0407694H	VO-TC-8230
4D0407694K	VO-TC-8230
4D0407694M	VO-TC-8230
4D0407694N	VO-TC-8230
4D0411317D	VO-LS-0157
4D0411317G	VO-LS-0157
4D0411317J	VO-LS-0157
4D0411317K	AU-LS-14840
4D0411327E	VO-SB-6748
4D0411327F	VO-SB-6749
4D0411327G	VO-SB-6748
4D0411327H	VO-SB-6749
4D0411327J	AU-SB-7912
4D0412369A	AU-SB-9515

...VW	MOOG
4D0412377F	VO-SB-10060
4D0419801B	VO-DS-8226
4D0419801B (-)	VO-AX-8291
4D0419801B (-)	VO-RK-15046
4D0419801B (-)	VO-RK-15049
4D0419801B (-)	VO-RK-15050
4D0419801B (-)	VO-RK-15064
4D0419801B (-)	VO-RK-15065
4D0419801C	VO-DS-8226
4D0419801C (-)	VO-AX-8291
4D0419801C (-)	VO-RK-15046
4D0419801C (-)	VO-RK-15049
4D0419801C (-)	VO-RK-15050
4D0419801C (-)	VO-RK-15064
4D0419801C (-)	VO-RK-15065
4D0419801E	VO-DS-8226
4D0419801G	VO-DS-8226
4D0419801L	VO-DS-8226
4D0419811	VO-ES-8227
4D0419811A	VO-ES-8227
4D0419811B	VO-ES-8227
4D0419811G	VO-ES-8227
4D0419811J	VO-ES-8227
4D0419831B	K150082
4D0419831B	K150141
4D0419831D	K150082
4D0419831D	K150141
4D0419831E	K150082
4D0419831E	K150141
4D0419831E	K150232
4D0419831K	K150141
4D0419831K	K150232
4D0422821	VO-AX-8291
4D0422821	VO-RK-15046
4D0422821	VO-RK-15049
4D0422821	VO-RK-15050
4D0422821	VO-RK-15064
4D0422821	VO-RK-15065
4D0422821A	VO-AX-8291
4D0422821A	VO-RK-15046
4D0422821A	VO-RK-15049
4D0422821A	VO-RK-15050
4D0422821A	VO-RK-15064
4D0422821A	VO-RK-15065
4D0501529A	VO-LS-2419
4D0505465D	VO-LS-8240
4D0505547C	AU-LS-8241
4D0505548C	AU-LS-8242
4D0511523C	AU-SB-4479
4D0801C	VO-DS-8226
4E0407151G	AU-TC-5062
4E0407182C	AU-SB-4844
4E0407505B	VO-TC-4932
4E0407505E	VO-TC-4932
4E0407506B	VO-TC-4933
4E0407506E	VO-TC-4933

...VW	MOOG
4E0407509B	VO-TC-4935
4E0407509E	VO-TC-4935
4E0407510B	VO-TC-4936
4E0407510E	VO-TC-4936
4E0407693C	AU-TC-5063
4E0407693F	AU-TC-5063
4E0407693N	AU-TC-5063
4E0407694C	AU-TC-5064
4E0407694F	AU-TC-5064
4E0407694N	AU-TC-5064
4E0411317E	AU-LS-4934
4E0419801C	AU-DS-5061
4E0419811B	AU-ES-4918
4E0419811C	AU-ES-4918
4E0419811D	AU-ES-4918
4E0419811E	AU-ES-4918
4E0419821	AU-AX-4428
4E0419831	K150233
4E0501529C	AU-TC-5065
4E0501529D	AU-TC-5065
4E0501529G	AU-TC-5065
4E0505203B	VO-SB-13485
4E0505203D	VO-SB-13484
4E0505465G	AU-LS-3898
4E0505547A	AU-LS-5067
4E0505548A	AU-LS-5068
4F0 505 145	AU-SB-7443
4F0407151	AU-TC-4937
4F0407183A	AU-SB-4843
4F0407183C	AU-SB-10586
4F0407693B	AU-TC-4945
4F0407694B	AU-TC-4946
4F0419811E	VO-ES-8227
4F0422821	AU-AX-4712
4F0498811	VO-ES-8227
4F0501529C	AU-TC-5479
4F0505145A	AU-SB-7444
4F0505465N	AU-LS-5421
4F0505465P	AU-LS-5475
4F0-513-353A	VO-SB-10977
4F0-513-353B	VO-SB-10977
4F0-513-353C	VO-SB-10977
4F0-513-353D	VO-SB-10977
4G0407689A	AU-BJ-13260
4G0423810A	AU-AX-12545
4G0423811A	AU-ES-10907
4G0423812A	AU-ES-10908
4H0407151A	AU-TC-14553
4H0407151B	AU-TC-14553
4H0407152A	AU-TC-14554
4H0407152B	AU-TC-14554
4H0407182B	AU-SB-13664
4H0407515A	AU-SB-10693
4H0407689	AU-BJ-13655
4H0407689A	AU-BJ-13655
4H0407693C	AU-TC-13653

...VW	MOOG
4H0407693D	AU-TC-13653
4H0407693E	AU-TC-13653
4H0407693F	AU-TC-13653
4H0407694C	AU-TC-13654
4H0407694D	AU-TC-13654
4H0407694E	AU-TC-13654
4H0407694F	AU-TC-13654
4H0411317A	AU-LS-8351
4H0422817A	AU-ES-13647
4H0422818A	AU-ES-13648
4J042281	K150022
4M0411317	AU-LS-10678
4Z7698507	VO-SB-10060
5104065AA	ME-SB-7982
5118732AA	ME-SB-10163
535411315	VO-DS-7187
561407151A	VO-WP-13657
561407151C	VO-WP-13657
561407152A	VO-WP-13658
561407152C	VO-WP-13658
561423810	VO-AX-13381
5C0407151A	VO-WP-10817
5C0407151B	VO-WP-10817
5C0407152A	VO-WP-10818
5C0407152B	VO-WP-10818
5C0407183A	VO-SB-10844
5Q0 501 529 B (-)	VO-SB-14577
5Q0 501 529 C (-)	VO-SB-14577
5Q0407151J	VO-WP-13839
5Q0407151J+	VO-WP-13841
5Q0407151L	VO-WP-13839
5Q0407151L+	VO-WP-13841
5Q0407151M	VO-WP-13839
5Q0407151M+	VO-WP-13841
5Q0407151R	VO-WP-13839
5Q0407151R+	VO-WP-13841
5Q0407152J	VO-WP-13840
5Q0407152J+	VO-WP-13842
5Q0407152L	VO-WP-13840
5Q0407152L+	VO-WP-13842
5Q0407152M	VO-WP-13840
5Q0407152M+	VO-WP-13842
5Q0407152R	VO-WP-13840
5Q0407152R+	VO-WP-13842
5Q0407182	VO-SB-13743
5Q0407182A	VO-SB-13743
5Q0407182F	VO-SB-13656
5Q0407183E	VO-SB-13656
5Q0407365A	VO-BJ-13581
5Q0407366A	VO-BJ-13582
5Q0411315B	VO-LS-13963
5Q0501529C (-)	VO-SB-14578
5Q0505323C	VO-TC-0586
5Q0505465C	VO-LS-13744
5Q0505541A	VO-SB-4930
5Q0505543B	VO-SB-14578

...VW	MOOG
5U0407365A	VO-BJ-7927
5U0407366A	VO-BJ-7926
5U0422811A	AU-ES-3721
5Z0407365B	SK-BJ-0413
5Z0407366B	SK-BJ-0414
5Z0423804	SK-DS-3993
5Z0423811	AU-ES-3721
5Z0423812	AU-ES-3723
6013260482	ME-SB-3880
6C0423810A	VO-AX-14746
6C0423810B	VO-AX-14746
6C0423810C	VO-AX-14746
6C0423811A	VO-ES-14747
6C0423812A	VO-ES-14748
6E0307366	VO-BJ-8249
6E0407365	VO-BJ-8248
6E0411315	VO-LS-4931
6E0419811	VO-ES-0510
6E0419811	VO-ES-0511
6E0419812	VO-ES-0510
6E0419812	VO-ES-0511
6E0419831	K150083
6E0419831	K150141
6E0419831	K150187
6E0419831	K150232
6K0411315	VO-LS-6994
6K0422803A	VO-DS-1511
6K0422803A (-)	VO-AX-7107
6K0422803B	VO-AX-7138
6K0422803B	VO-DS-7333
6K0422803D	VO-DS-1511
6K0422803D	VO-DS-1512
6K0422803E	VO-DS-7333
6K0422804A	VO-DS-1512
6K0422804B	VO-DS-7334
6K0422804D	VO-DS-1511
6K0422804D	VO-DS-1512
6K0422804E	VO-DS-7334
6K0422811	VO-ES-0511
6K0422812	VO-ES-0510
6K0501541A	VO-SB-7978
6N0407151	VO-WP-0235
6N0407151	VO-WP-0236
6N0407151A	VO-WP-0235
6N0407151A	VO-WP-0236
6N0407151A	VO-WP-1519
6N0407151A	VO-WP-1520
6N0407151B	VO-WP-0235
6N0407151B	VO-WP-0236
6N0407181	VO-SB-1368
6N0407182	VO-SB-1367
6N0407365	VO-BJ-8249
6N0407365A	VO-BJ-8248
6N0411315	VO-LS-0463
6N0411315A	VO-LS-3353
6N0411315B	VO-LS-3353

...VW	MOOG
6N0411315C	VO-LS-0463
6N0411315D	VO-LS-3353
6N0411329	VO-SB-7958
6N0411811	VO-ES-8247
6N0411812	VO-ES-8246
6N0412249C	VO-SB-10066
6N0412331	VO-SB-10052
6N0412331A	VO-SB-10052
6N0412331E	VO-SB-10068
6N0419803	VO-DS-8245
6N0419803 (-)	VO-AX-1282
6N0419804	VO-DS-8244
6N0419804 (-)	VO-AX-1282
6N0419811	VO-ES-7139
6N0419811	VO-ES-8247
6N0419812	VO-ES-7106
6N0419812	VO-ES-8246
6N0419821	VO-AX-1282
6N0419831	K150081
6N0422803	VO-DS-3535
6N0422803 (-)	VO-AX-8275
6N0422803A	VO-DS-3535
6N0422804	VO-DS-3536
6N0422804 (-)	VO-AX-8275
6N0422804A	VO-DS-3536
6N0422811	VO-ES-7139
6N0422811	VO-ES-8247
6N0422812	VO-ES-7106
6N0422812	VO-ES-8246
6N0422821A	VO-AX-8275
6N0422831	K150083
6N0501541D	VO-SB-4482
6N0501541E	VO-SB-7978
6Q0407151D	VO-WP-1116
6Q0407151D + Ball Joint	VO-WP-1116
6Q0407151D + Ball Joint	VO-WP-1989
6Q0407151DL	VO-WP-1116
6Q0407151DR	VO-WP-1989
6Q0407151E	VO-WP-1116
6Q0407151E	VO-WP-1989
6Q0407151L	VO-WP-1116
6Q0407151L	VO-WP-1989
6Q0407182A	SE-SB-0100
6Q0407183	SE-SB-0104
6Q0407183A	SE-SB-0104
6Q0407183B	SE-SB-0104
6Q0407365A	SK-BJ-0413
6Q0407365B	SK-BJ-0413
6Q0407365M	SK-BJ-0413
6Q0407366A	SK-BJ-0414
6Q0407366B	SK-BJ-0414
6Q0407366M	SK-BJ-0414
6Q0411314E	VO-SB-7419
6Q0411314F	VO-SB-7161
6Q0411314J	VO-SB-7896
6Q0411314L	VO-SB-7896

...VW	MOOG
6Q0411314M	VO-SB-7895
6Q0411314N	VO-SB-7419
6Q0411314P	VO-SB-7896
6Q0411314Q	VO-SB-7895
6Q0411314R	VO-SB-7419
6Q0411315A	VO-LS-0494
6Q0411315B	VO-LS-0494
6Q0411315C	VO-LS-0494
6Q0411315D	VO-LS-0494
6Q0411315E	VO-LS-0494
6Q0411315F	VO-LS-0494
6Q0411315G	VO-LS-0494
6Q0411315J	VO-LS-0494
6Q0411315L	VO-LS-0494
6Q0411315M	VO-LS-0494
6Q0411315N	VO-LS-0494
6Q0411315P	VO-LS-0494
6Q0419803B	SK-DS-0415
6Q0419803F	SK-DS-0415
6Q0419804B	SK-DS-0416
6Q0419804F	SK-DS-0416
6Q0419811C	AU-ES-3721
6Q0419811C	VO-ES-1507
6Q0419812C	AU-ES-3723
6Q0422804P	SK-DS-0416
6Q0423803B	SK-DS-0415
6Q0423803B (-)	SE-AX-0091
6Q0423803B (-)	VO-RK-15053
6Q0423803B (-)	VO-RK-15062
6Q0423803C	SK-DS-3992
6Q0423803E	SK-DS-0415
6Q0423803G	SK-DS-3992
6Q0423803P	SK-DS-0415
6Q0423804B	SK-DS-0416
6Q0423804C	SK-DS-3993
6Q0423804E	SK-DS-0416
6Q0423804G	SK-DS-3993
6Q0423804P	SK-DS-0416
6Q0423810C	SK-DS-3993
6Q0423810C	VO-AX-12550
6Q0423811	AU-ES-3721
6Q0423811	VO-ES-1507
6Q0423811A	VO-ES-1507
6Q0423811C	AU-ES-3721
6Q0423811C	VO-ES-1507
6Q0423811D	AU-ES-3721
6Q0423811D	VO-ES-1507
6Q0423812	AU-ES-3723
6Q0423812	VO-ES-1506
6Q0423812A	VO-ES-1506
6Q0423812C	AU-ES-3723
6Q0423812C	VO-ES-1506
6Q0423812D	AU-ES-3723
6Q0423821B	SE-AX-0091
6Q0423821B	VO-RK-15053
6Q0423821B	VO-RK-15062

...VW	MOOG
6Q0423831A	K150234
6Q0423831D	K150235
6Q04238810C	SK-DS-3993
6Q04238812C	SK-DS-3993
6R0407151	VO-WP-8837
6R0407151A	VO-WP-8853
6R0407151C	VO-WP-8853
6R0407151E	VO-WP-8837
6R0407151F	VO-WP-8853
6R0407152	VO-WP-8838
6R0407152A	VO-WP-8854
6R0407152C	VO-WP-8854
6R0407152E	VO-WP-8838
6R0407152F	VO-WP-8854
6R0407365	VO-BJ-7927
6R0407365A	VO-BJ-7927
6R0407365B	VO-BJ-7927
6R0407366	VO-BJ-7926
6R0407366A	VO-BJ-7926
6R0407366B	VO-BJ-7926
6R0411315	VO-LS-0494
6R0411315A	VO-LS-0494
6R0423803C	VO-AX-8759
6R0423803D	VO-AX-8759
6R0423804C	VO-AX-8759
6R0423804D	VO-AX-8759
6R0423810	VO-AX-8759
6R0423810A	VO-AX-8759
6R0423811	AU-ES-3721
6R0423811	VO-ES-1507
6R0423811A	AU-ES-3721
6R0423812	AU-ES-3723
6R0423812	VO-ES-1506
6RD422811	AU-ES-3721
6RD422812	AU-ES-3723
6RD423810	VO-AX-14749
6RD423811A	AU-ES-3721
6RD423812A	AU-ES-3723
6RU423810	VO-AX-14749
6U0407151A	SK-WP-0662
6U0407151B	SK-WP-0662
6U0407152A	SK-WP-0663
6U0407152B	SK-WP-0663
6U0407182	SK-SB-4031
6U0407365	SK-BJ-8223
6U0407503	SK-SB-4034
6U0407504	SK-SB-2852
6U0422807	SK-AX-0064
6U0422807	SK-AX-2851
6U0422811	SK-ES-8222
6U0422831	K150083
6X0407151A	VO-WP-0235
6X0407151A	VO-WP-0236
6X0407151A	VO-WP-1519
6X0407151A	VO-WP-1520
6X0411313	VO-SB-7147

...VW	MOOG
6X0411313A	VO-SB-8813
6X0419803A (-)	VO-AX-1812
6X0419804A (-)	VO-AX-1812
6X0422803A (-)	VO-AX-1715
6X0422804A (-)	VO-AX-1715
6X0422811	VO-ES-0511
6X0422812	VO-ES-0510
701407077	VO-SB-4493
701407077A	VO-SB-4493
701407087	VO-SB-4492
701407140B	VO-SB-4449
701407140C	VO-SB-4449
701407151A	VO-TC-5117
701407152A	VO-TC-5118
701407183	VO-SB-4463
701407183C	VO-SB-4452
701407187	VO-BJ-7192
701407187A	VO-BJ-7192
701407187B	VO-BJ-7192
701407361	VO-BJ-7193
701407361B	VO-BJ-7193
701411041	VO-SB-7200
701411049	VO-LS-1087
701411049B	VO-LS-1089
701419803A	VO-DS-8211
701419803C	VO-DS-8211
701419803C (-)	VO-AX-8016
701419803C (-)	VO-RK-15030
701419803C (-)	VO-RK-15035
701419803D	VO-DS-1622
701419803D	VO-DS-2183
701419803E	VO-DS-8251
701419804C	VO-DS-8213
701419804C (-)	VO-AX-8016
701419804C (-)	VO-RK-15030
701419804C (-)	VO-RK-15035
701419804D	VO-DS-1622
701419804E	VO-DS-8250
701419804F	VO-DS-0719
701419810	VO-AX-8015
701419810A	VO-AX-8016
701419810A	VO-RK-15030
701419810A	VO-RK-15035
701419810B	VO-AX-8016
701419810B	VO-RK-15030
701419810B	VO-RK-15035
701419811A	VO-ES-8215
701419811B	VO-ES-8216
701419811C	VO-ES-8255
701419811E	VO-ES-0368
701419812	VO-ES-8217
701419812A	VO-ES-8218
701419812B	VO-ES-8000
701419812D	VO-ES-0369
701419821C	VO-AX-8016
701419821C	VO-RK-15030

...VW	MOOG
701419821C	VO-RK-15035
701419822C	VO-AX-8015
701419831	K150147
702419803A (-)	VO-AX-8015
702419803D	VO-DS-0720
702419804A (-)	VO-AX-8015
7200946	VO-BJ-0319
7304446	SK-WP-0663
7304447	SK-WP-0662
7820040701	K150141
7820040701	K150232
7D0407140	VO-SB-4449
7D0407140A	VO-SB-4449
7D0407151A	VO-TC-10815
7D0407152A	VO-TC-10816
7D0407183	VO-SB-4452
7D0407361	VO-BJ-0370
7D0411045	VO-SB-4446
7D0411049	VO-LS-1087
7D0419831	K150159
7E0407151B	VO-TC-14759
7E0407151C	VO-TC-14759
7E0407152B	VO-TC-14760
7E0407152C	VO-TC-14760
7E0407361	VO-BJ-1990
7E0412319	VO-SB-10087
7E0422817	VO-ES-2314
7E0422818	VO-ES-2315
7H0407151E	VO-WP-2316
7H0407151F	VO-WP-2316
7H0407151G	VO-WP-2316
7H0407152E	VO-WP-2317
7H0407152F	VO-WP-2317
7H0407152G	VO-WP-2317
7H0407182	VO-SB-13719
7H0407182A	VO-SB-13719
7H0407182A	VO-SB-2319
7H0407183	VO-SB-2318
7H0407361	VO-BJ-1990
7H0407361A	VO-BJ-1990
7H0411313	VO-SB-2320
7H0411314	VO-SB-10878
7H0411317	VO-LS-2311
7H0411317A	VO-LS-2311
7H0412249A	VO-SB-10087
7H0419803B (-)	VO-AX-2313
7H0419803C (-)	VO-AX-2313
7H0419804B (-)	VO-AX-2313
7H0419804C (-)	VO-AX-2313
7H0419804D (-)	VO-AX-2313
7H0419804E (-)	VO-AX-2313
7H0419804F (-)	VO-AX-2313
7H0419810B	VO-AX-2313
7H0419810C	VO-AX-2313
7H0419810D	VO-AX-2313
7H0419810E	VO-AX-2313

...VW	MOOG
7H0419810F	VO-AX-2313
7H0422817A	VO-ES-2314
7H0422817B	VO-ES-2314
7H0422817C	VO-ES-2314
7H0422817D	VO-ES-2314
7H0422818A	VO-ES-2315
7H0422818B	VO-ES-2315
7H0422818C	VO-ES-2315
7H0422818D	VO-ES-2315
7H0422831	K150241
7H0501132A	VO-SB-13717
7H0511414	VO-SB-10877
7H5411313A	VO-SB-10550
7H5411313B	VO-SB-13583
7H5411317	VO-LS-2311
7H5411317A	VO-LS-2311
7H5411317B	VO-LS-2311
7H5411317D	VO-LS-2311
7H5511414A	VO-SB-13288
7H8407151B	VO-TC-13775
7H8407152B	VO-TC-13776
7H8407361	VO-BJ-7050
7H8407361A	VO-BJ-7050
7L0407021	VO-WP-3071
7L0407021A	VO-WP-3071
7L0407021B	VO-WP-3071
7L0407077	VO-RK-4858
7L0407151C	VO-WP-3060
7L0407151E	VO-WP-3060
7L0407151H	VO-WP-3060
7L0407152C	VO-WP-3061
7L0407152E	VO-WP-3061
7L0407152H	VO-WP-3061
7L0407182C	VO-SB-5624
7L0407182E	VO-SB-5624
7L0407182F	VO-SB-12647
7L0407182G	VO-SB-12647
7L0407182V	VO-SB-12647
7L0407183A	VO-SB-5623
7L0411317	VO-LS-3053
7L0411317 (-)	AU-SB-7891
7L0412333A	VO-SB-3073
7L0422803B (-)	VO-AX-3054
7L0422817B	VO-ES-3058
7L0422817C	VO-ES-3058
7L0422817D	VO-ES-3058
7L0422818B	VO-ES-3059
7L0422818C	VO-ES-3059
7L0422818D	VO-ES-3059
7L0422821	VO-AX-3054
7L0422831A	K150237
7L0505323A	AU-TC-7888
7L0505323A (-)	AU-SB-7889
7L0505323A (-)	AU-SB-7890
7L0505397	AU-TC-8985
7L0505397 (-)	VO-SB-12546

...VW	MOOG
7L0505398	AU-TC-10622
7L0505398 (-)	VO-SB-12546
7L0505465A	VO-LS-4397
7L0505465B	VO-LS-4397
7L0505465C	VO-LS-4397
7L0505465D	VO-LS-4397
7L0505466A	VO-LS-4398
7L0505466B	VO-LS-4398
7L0505466C	VO-LS-4398
7L0505466D	VO-LS-4398
7L8407021	VO-TC-13968
7L8407151D	AU-TC-8355
7L8407151E	AU-TC-8355
7L8407151F	AU-TC-7887
7L8407151K	AU-TC-7887
7L8407152D	AU-TC-8356
7L8407152E	AU-TC-8356
7L8407152F	AU-TC-7886
7L8407152K	AU-TC-7886
7M0311317	VO-LS-0318
7M0407151B	VO-WP-0451
7M0407152B	VO-WP-0450
7M0407181	VO-SB-1195
7M0407181A	VO-SB-1195
7M0407181A	VO-SB-1212
7M0407365A	VO-BJ-0319
7M0411031	FD-SB-6767
7M0411317B	VO-LS-0318
7M0411317C	VO-LS-0318
7M0411317D	VO-LS-0318
7M0422803F	VO-DS-8257
7M0422803G	VO-DS-8257
7M0422804F	VO-DS-8256
7M0422804G	VO-DS-8256
7M0422817	VO-ES-8259
7M0422817A	VO-ES-8259
7M0422817B	VO-ES-8259
7M0422818	VO-ES-8258
7M0422818A	VO-ES-8258
7M0422818B	VO-ES-8258
7M0422821F	VO-AX-0358
7M0422821F	VO-RK-15009
7M0422831B	K150084
7M0501541	VO-SB-1212
7M0505222B	VO-SB-8810
7M0511413A	VO-SB-6814
7M0511413B	VO-SB-13463
7M0511414C	VO-SB-13464
7M3407365A	VO-BJ-0319
7M3407365C	VO-BJ-0319
7M3411317	VO-LS-0318
7M3411317B	VO-LS-0318
7M3411317C	VO-LS-0318
7M3411317E	VO-LS-0318
7M3422803	VO-AX-0358
7M3422803	VO-DS-8257

...VW	MOOG
7M3422803	VO-RK-15009
7M3422803A	VO-DS-8257
7M3422804	VO-AX-0358
7M3422804	VO-DS-8256
7M3422804	VO-RK-15009
7M3422804A	VO-DS-8256
7M3422817	VO-ES-8259
7M3422818	VO-ES-8258
7M3422831	K150084
7M3498317	VO-RK-1210
7P0407021	VO-TC-13465
7P0407077	VO-SB-13466
7P0407151C	AU-TC-7887
7P0407152C	AU-TC-7886
803419811	VO-AX-7159
811199419B	AU-SB-4461
811407147B	VO-WP-0737
811407181	VO-SB-1359
811407181A	VO-SB-1359
811411327A	AU-SB-4470
811412323	AU-SB-9520
811412323C	AU-SB-9520
811412323D	AU-SB-9520
811412331	VO-SB-10056
811412365	AU-SB-9520
811419801C	VO-DS-3924
811419801E	VO-DS-3924
811419802J	VO-DS-3925
811419812	VO-ES-3026
811419812A	AU-ES-3916
811419812B	AU-ES-3916
811419831B	K150022
811511247	AU-SB-1136
823407181	AU-SB-1153
823407365E	VO-BJ-3030
823411313A	AU-SB-1602
823412355	VO-SB-10058
823419811	VO-ES-3026
823512097	VO-SB-10059
855407365A	VO-BJ-3917
855407365B	VO-BJ-3917
855407366A	VO-BJ-3918
855407366B	VO-BJ-3918
857407147A	VO-WP-0132
857407148A	VO-WP-0131
857407181	VO-SB-1361
857407474	VO-SB-1360
861407151A	VO-TC-7162
861407151B	AU-TC-3035
861407183	VO-SB-1177
861411313	VO-SB-6633
861412323A	AU-SB-9519
861419801C	VO-DS-3028
861419801D	VO-DS-3028
861419812	VO-ES-3026
861419831B	K150007

...VW	MOOG
861419832	K150007
861511271	VO-SB-4468
861719812	VO-ES-3026
862419802	VO-DS-7122
867411313	VO-SB-6633
871412323A	AU-SB-9519
871412323B	AU-SB-9519
871419801A	VO-DS-7121
871419802	VO-DS-7123
871419802A	VO-DS-7123
871511423	VO-SB-13631
872419802A	VO-DS-7122
893199415	AU-SB-4458
893199419	AU-SB-4461
893407147C	VO-WP-0132
893407147G	VO-WP-0737
893407148C	VO-WP-0131
893407365F	AU-BJ-7170
893407366B	AU-BJ-7177
893407366F	AU-BJ-7174
893407465A	AU-LS-7179
893411327E	AU-SB-6651
893419802	AU-DS-7197
895407147A	AU-WP-0154
895407147A + Ball Joint	VO-WP-0232
895407148A	AU-WP-0155
895407365	AU-BJ-7175
895505389	AU-LS-3944
8A0199415B	AU-SB-4506
8A0199419	AU-SB-4469
8A0407181	VO-SB-1361
8A0412323D	AU-SB-9520
8A0419812	AU-ES-3916
8A0501530B	AU-TC-1789
8A0501541	AU-SB-4448
8A0505465C	AU-LS-8295
8A0505466C	AU-LS-8296
8A0511247B	AU-SB-4489
8A0512333	AU-SB-9522
8A0512335	AU-SB-9522
8D0407151E	VO-TC-8228
8D0407505A	VO-TC-4000
8D0407505B	VO-TC-4000
8D0407505F	VO-TC-4000
8D0407505H	VO-TC-4000
8D0407505K	VO-TC-4000
8D0407506A	VO-TC-4001
8D0407506B	VO-TC-4001
8D0407506F	VO-TC-4001
8D0407506H	VO-TC-4001
8D0407506K	VO-TC-4001
8D0407507E	VO-TC-4000
8D0407509A	AU-TC-0674
8D0407509C	AU-TC-0674
8D0407509E	AU-TC-0674
8D0407509F	AU-TC-0674

...VW	MOOG
8D0407510A	AU-TC-0678
8D0407510C	AU-TC-0678
8D0407510E	AU-TC-0678
8D0407510F	AU-TC-0678
8D0407515A	VO-SB-1362
8D0407515B	VO-SB-1362
8D0407515C	VO-SB-1362
8D0411317D	VO-LS-0157
8D0411317D	VO-LS-0357
8D0411317D (-)	VO-SB-10149
8D0411318D	VO-LS-0356
8D0419831D	K150082
8D0419831D	K150141
8D0419831J	K150141
8D0419831J	K150232
8D0419831K	K150141
8D0419831K	K150232
8D0498998	VO-RK-5000
8D0498998S1	VO-RK-5001
8D0501530	AU-DS-8294
8D0501541D	AU-SB-4455
8D0511327C	VO-SB-14966
8E0 513 353 D	VO-SB-10977
8E0407151E	VO-TC-0892
8E0407151L	VO-TC-0892
8E0407151M	VO-TC-0892
8E0407151RS2	VO-RK-5002
8E0407181B	AU-SB-8106
8E0407181C	AU-SB-8106
8E0407505A	AU-TC-6995
8E0407505A	VO-TC-4000
8E0407505C	AU-TC-6995
8E0407506A	AU-TC-6996
8E0407506A	VO-TC-4001
8E0407506C	AU-TC-6996
8E0407509A	AU-TC-0674
8E0407509A	AU-TC-6997
8E0407509P	AU-TC-6997
8E0407510A	AU-TC-0678
8E0407510A	AU-TC-6998
8E0407510P	AU-TC-6998
8E0407693	VO-TC-8229
8E0407693AG	VO-TC-8229
8E0407693E	VO-TC-8229
8E0407693H	VO-TC-8229
8E0407693K	VO-TC-8229
8E0407693P	VO-TC-8229
8E0407693Q	VO-TC-8229
8E0407693T	AU-TC-4696
8E0407694	VO-TC-8230
8E0407694AG	VO-TC-8230
8E0407694E	VO-TC-8230
8E0407694H	VO-TC-8230
8E0407694K	VO-TC-8230
8E0407694P	VO-TC-8230
8E0407694Q	VO-TC-8230

...VW	MOOG
8E0407694T	AU-TC-4697
8E0411317	AU-LS-3717
8E0411317 (-)	AU-SB-15103
8E0411318	AU-LS-3718
8E0411318 (-)	AU-SB-15103
8E0412377	AU-SB-9515
8E0419801B (-)	VO-AX-8291
8E0419801B (-)	VO-RK-15046
8E0419801B (-)	VO-RK-15049
8E0419801B (-)	VO-RK-15050
8E0419801B (-)	VO-RK-15064
8E0419801B (-)	VO-RK-15065
8E0419811	AU-ES-3839
8E0419811B	VO-ES-8227
8E0419831	K150141
8E0419831	K150232
8E0501521N	VO-SB-8445
8E0501522N	VO-SB-8446
8E0501529G	AU-TC-7917
8E0501529K	AU-TC-7917
8E0501529P	AU-TC-7917
8E0501537M	AU-SB-5481
8E0501538F	AU-SB-5485
8E0505145AP	AU-SB-9037
8E0505145AR	AU-SB-9031
8E0505145F	VO-SB-13502
8E0505145M	VO-SB-13502
8E0505172A	VO-SB-13506
8E0505185C	VO-SB-13505
8E0505203D	AU-SB-5236
8E0505323M	VO-TC-13241
8E0505324M	VO-TC-13242
8E0505465C	AU-ES-3890
8E0505465D	AU-ES-3890
8E0505465E	AU-LS-3898
8E0505465G	AU-LS-3898
8E0505465T	VO-LS-2271
8E0511327A	VO-SB-14676
8E0511327D	AU-SB-14731
8E0599257K	AU-SB-5635
8E0513353B	VO-SB-10062
8E0513353D	VO-SB-10062
8J0199231	AU-SB-7755
8J0407151D + Ball Joint	AU-TC-5196
8J0407151D + Ball Joint	AU-TC-5197
8J0407365	AU-BJ-5194
8J0407366	AU-BJ-5195
8J0423810	AU-AX-5193
8J0423811	AU-ES-5191
8J0423812	AU-ES-5192
8K0407151B	AU-TC-7437
8K0407151C	AU-TC-7437
8K0407151D	AU-TC-7437
8K0407151F	AU-TC-12623
8K0407152B	AU-TC-7438
8K0407152C	AU-TC-7438

...VW	MOOG
8K0407152D	AU-TC-7438
8K0407152F	AU-TC-12624
8K0407182A	AU-SB-7439
8K0407183A	AU-SB-7441
8K0407183D	AU-SB-13832
8K0407505A	AU-TC-7352
8K0407506A	AU-TC-7353
8K0407509A	AU-TC-7355
8K0407509B	AU-TC-7883
8K0407510A	AU-TC-7356
8K0407510B	AU-TC-7884
8K0407515	AU-SB-7357
8K0407689D	AU-BJ-7440
8K0407693F	AU-TC-8081
8K0407693K	AU-TC-8081
8K0407693N	AU-TC-8081
8K0407693T	AU-TC-10799
8K0407694K	AU-TC-8082
8K0407694T	AU-TC-10800
8K0411317A	AU-LS-10678
8K0411317B	AU-LS-8044
8K0411317C	AU-LS-8351
8K0411317D	AU-LS-8351
8K0411317E	AU-LS-8351
8K0411327A	AU-SB-10798
8K0411327B	AU-SB-13386
8K0411327C	AU-SB-13742
8K0422817A	AU-ES-7377
8K0422818A	AU-ES-7378
8K0501529K	AU-TC-7373
8K0501529K (-)	AU-SB-12596
8K0501530K	AU-TC-7374
8K0501530K (-)	AU-SB-12596
8K0501541	AU-SB-12570
8K0505323F	AU-TC-7369
8K0505324F	AU-TC-7372
8K0505465E	AU-LS-7376
8K0505465E (-)	AU-SB-8107
8K0505465G	AU-LS-7376
8N0407151A	AU-TC-8869
8N0407151A	AU-WP-3948
8N0407151D	AU-TC-8869
8N0407151D	AU-WP-3948
8N0407152A	AU-TC-8870
8N0407152A	AU-WP-3949
8N0407152D	AU-TC-8870
8N0407152D	AU-WP-3949
8N0407181B	AU-SB-7331
8N0407182A	AU-SB-7256
8N0407365A	VO-BJ-2410
8N0407365B	VO-BJ-2410
8N0407365C	VO-BJ-2410
8N0422803A	AU-DS-0718
8N0422803A (-)	VO-AX-2409
8N0422803C	AU-DS-0718
8N0422804A	AU-DS-0717

...VW	MOOG
8N0422804A (-)	VO-AX-2409
8N0422804C	AU-DS-0717
8N0422807	VO-AX-2409
8N0422807D	AU-AX-6982
8N0422811A	VO-ES-2405
8N0422812	VO-ES-2404
8N0422812A	VO-ES-2404
8N0422831	K150182
8S0423810A	AU-AX-15387
8Z0407151J	VO-WP-2411
8Z0407152J	VO-WP-2412
8Z0407153L	VO-WP-2413
8Z0407153L	VO-WP-2414
8Z0407182C	AU-SB-3878
8Z0407183A	AU-SB-3879
8Z0411314B	AU-SB-7436
8Z0411315B	VO-LS-2422
8Z0423803C (-)	VO-AX-2408
8Z0423804C (-)	VO-AX-2408
8Z0423811A	AU-ES-10890
8Z0423812A	AU-ES-10889
8Z0501541	AU-SB-8039
9013301807	ME-WP-2332
9013301907	ME-WP-2333
9013302507	ME-WP-2333
9014600155	ME-AX-6343
9014600155	ME-RK-15020
95533306910	VO-LS-4397
95533306911	VO-LS-4397
95533307010	VO-LS-4398
95533307011	VO-LS-4398
99634306903	VO-LS-13587
99634307002	VO-LS-10912
J4333039295	TO-BJ-1800
J4335039075	TO-BJ-10028
N10218708	SK-DS-3993
N90113701	VO-SB-10057

ZASTAVA	MOOG
4226335	FI-TC-0255
4254278	FI-ES-0254
4311667	FI-AX-3113
4318655	FI-AX-3113
4402360	FI-TC-4063
4443201	FI-ES-0254
5960321	FI-AX-4080
5962654	FI-ES-4084
5962655	FI-ES-4084

NOTES

NOTES

NOTES

NOTES

FEDERAL-MOGUL MOTORPARTS

Federal-Mogul Global Aftermarket EMEA bvba
Prins Boudewijnlaan 5 • 2550 Kontich • Belgium
Central Distribution Centre
Schoondonkweg 17 • 2830 Willebroek • Belgium
Phone +32 (0) 3450 83 10 • Fax +32 (0) 3450 83 38

Federal-Mogul Italy Srl • Aftermarket Division
Via Enrico Fermi 8 • 37135 Verona • Italy
Phone +39 045 828 13 11 • Fax +39 045 828 14 00

Federal-Mogul Aftermarket GmbH
Albert-Ruprecht-Strasse 2 • 71636 Ludwigsburg • Germany
Phone +49 (0) 7141-64865-8230 • Fax +49 (0) 7141-64865-8390

Federal-Mogul Aftermarket UK Limited
Greyhound Drive • Bradford • BD7 1NQ • U.K.
Phone +44 (0) 800 970 0203 • Fax +44 (0) 1274 848282

Federal-Mogul Aftermarket España S.A.
Calle Alcarria, nº 2 • 28823 Coslada • Madrid • Spain
Phone + 34 91 746 1900 • Fax + 34 91 746 18 90

Federal-Mogul Aftermarket France SAS
60-62, rue Danjou • 92517 Boulogne-Billancourt Cedex • France
Phone +33 (0) 1 46 94 27 00 • Fax +33 (0) 1 46 94 27 01
Service Commande de stock :
Phone +33 (0) 810 000 029 • Fax +32 (0) 34 50 80 26
Service Commande express :
Phone +33 (0) 810 000 029 • Fax +32 (0) 34 50 80 26

Federal-Mogul Motorparts Serbia*
Spanskih Boraca 22 • 11070 Novi Beograd • Serbia
Phone +381 11 31 31 918 • Fax +381 11 31 31 848

Federal-Mogul Aftermarket Southern Africa (PTY) Ltd
13-15 Joyner Road • Prospection • 4110 Durbon • South Africa
Phone +27 (0) 11 630 3000 • Fax +27 (0) 11 630 3040

Federal Mogul Powertrain Otomotiv A.S. (Aftermarket Division)
Meclis-i Mebusan Cad. No: 53 Dereli İş Merkezi 34427 • Fındıklı / İstanbul • Türkiye
Phone +90 212 292 6313 • Fax +90 212 292 6260

Federal-Mogul VCS OOO
Smolnaya street 24D, 13th floor • 125445 Moscow • Russia
Phone +7 495 221 50 60 • Fax +7 495 221 50 64

Federal-Mogul Aftermarket Egypt Ltd.
3 El Yemen St., Giza • 12311 Egypt • P.O. Box: 391 Dokki • Egypt
Phone +202 333 85 725 • Fax +202 374 84 147

Federal-Mogul Motorparts Sharjah*
Sharjah Airport International Free Zone (Saif-Zone)
Building X3 • Phone 20, 21, 22 • P.O.Box. 120548 • Sharjah • UAE
Phone +971 6 557 8870 • Fax +971 6 557 8941

---

* Branch office of Federal-Mogul Global Aftermarket EMEA, bvba

BERU® is a Registered Trademark of Borg Warner Ludwigsburg GmbH

© 2017 Federal-Mogul Global Aftermarket EMEA, BVBA. All trademarks shown are owned by Federal-Mogul LLC or one or more of its subsidiaries in one or more countries.

MAKE IT EASY. MAKE IT MOOG

QUICK IDENTIFICATION OF MOOG PARTS ON E-CATALOGUE

UP-TO-DATE ON PRODUCTS AND SERVICES

www.moogparts.eu

CAMPUS

TRAINING BECOMES EASY WITH VIRTUAL CAMPUS

VIDEOS TO MAKE YOUR CHASSIS REPAIRS EASY

STAY UP-TO-DATE AND SUBSCRIBE TO OUR E-MAIL ALERTS

FEDERAL-MOGUL MOTORPARTS

ENGINEERED elcome BY

4 060426 158248

CATMO1801